BP1133F.DGN

CONST. NO. 47026-3279-14

| PROJECT NO. | YEAR | SHEET NO. |
|---|---|---|
| NH-115(54) | 2015 | |

REVISIONS

| NO. | DATE | BY | BRIEF DESCRIPTION |
|---|---|---|---|
| | | | |

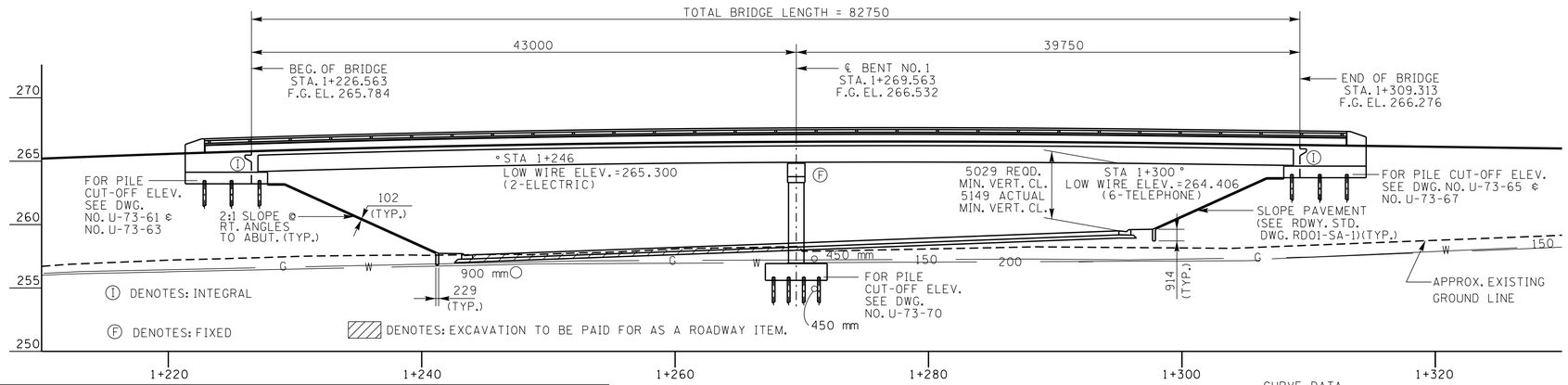


ELEVATION

(AT RT. ∆S TO ℄ SURVEY MALONEY ROAD)
(SCALE: 1:12.5)

BRIDGE DECK GRATE DRAIN LOCATIONS

| NUMBER | STATION | TYPE | NUMBER | STATION | TYPE | NUMBER | STATION | TYPE |
|---|---|---|---|---|---|---|---|---|
| 1 | 1+232.000 RT. | 2 | 6 | 1+241.500 RT. | 2 | 11 | 1+266.500 LT. | 1 |
| 2 | 1+234.500 RT. | 2 | 7 | 1+243.000 RT. | 2 | 12 | 1+298.500 RT. | 2 |
| 3 | 1+236.500 RT. | 2 | 8 | 1+270.000 RT. | 2 | 13 | 1+300.000 RT. | 2 |
| 4 | 1+238.500 RT. | 2 | 9 | 1+273.000 RT. | 2 | 14 | 1+304.500 RT. | 2 |
| 5 | 1+240.000 RT. | 2 | 10 | 1+263.500 LT. | 1 | 15 | 1+309.000 RT. | 2 |

CURVE DATA
MALONEY ROAD
PI 1+196.250
N 176,355.2795
E 784,687.2208
∆ 52° 45′ 16″ (RT)
R 98.200
Lc 90.417
T 48.698
E 11.412
S.E. 4.0%
TRANS. LENGTH 32
DESIGN SPEED 50km/h

CURVE DATA
STATE ROUTE 115
PI 10+311.961
N 176,252.1860
E 784,783.6215
∆ 12° 39′ 44″ (LT)
R 1500.000
Lc 331.498
T 166.427
E 9.204
S.E. 3.9%
TRANS. LENGTH 102
DESIGN SPEED 110km/h

NOTE: ALL DIMENSIONS SHOWN IN MILLIMETERS, WITH THE EXCEPTION OF STATIONS AND ELEVATIONS, UNLESS OTHERWISE NOTED.

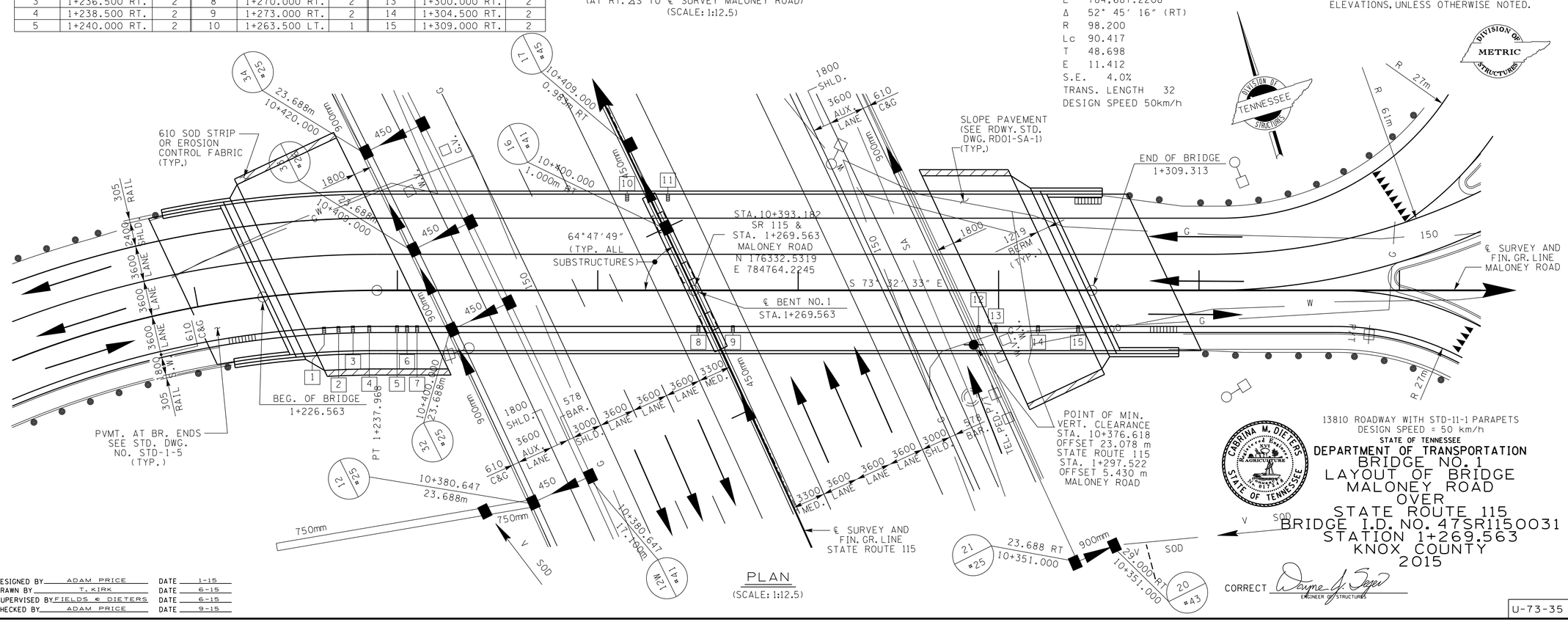


PLAN

(SCALE: 1:12.5)

DIVISION OF METRIC STRUCTURES

DIVISION OF TENNESSEE STRUCTURES

13810 ROADWAY WITH STD-11-1 PARAPETS
DESIGN SPEED = 50 km/h

STATE OF TENNESSEE
DEPARTMENT OF TRANSPORTATION
BRIDGE NO. 1
LAYOUT OF BRIDGE
MALONEY ROAD
OVER
STATE ROUTE 115
BRIDGE I.D. NO. 47SR1150031
STATION 1+269.563
KNOX COUNTY
2015

CABRINA M. DIETERS
STATE OF TENNESSEE

CORRECT Wayne G. Sieger
ENGINEER OF STRUCTURES

DESIGNED BY ADAM PRICE DATE 1-15
DRAWN BY T. KIRK DATE 6-15
SUPERVISED BY FIELDS & DIETERS DATE 6-15
CHECKED BY ADAM PRICE DATE 9-15

U-73-35

BP1133F.DGN

CONST. NO. 47026-3279-14

| PROJECT NO. | YEAR | SHEET NO. |
|---|---|---|
| NH-115(54) | 2015 | |

REVISIONS

| NO. | DATE | BY | BRIEF DESCRIPTION |
|---|---|---|---|
| | | | |

## LIST OF DRAWINGS

| | DWG. NO. | LAST REV. DATE |
|---|---|---|
| LAYOUT OF BRIDGE | U-73-35 | -- |
| LAYOUT OF BRIDGE | U-73-36 | -- |
| GENERAL NOTES & ESTIMATED QUANTITIES | U-73-37 | -- |
| FOUNDATION DATA | U-73-38 | -- |
| FOUNDATION DATA | U-73-39 | -- |
| FOUNDATION DATA | U-73-40 | -- |
| SUPERSTRUCTURE | U-73-41 | -- |
| SUPERSTRUCTURE DETAILS | U-73-42 | -- |
| SUPERSTRUCTURE DETAILS | U-73-43 | -- |
| SUPERSTRUCTURE DETAILS | U-73-44 | -- |
| SUPERSTRUCTURE DETAILS | U-73-45 | -- |
| SUPERSTRUCTURE DETAILS | U-73-46 | -- |
| SUPERSTRUCTURE DETAILS | U-73-47 | -- |
| SUPERSTRUCTURE DETAILS | U-73-48 | -- |
| SUPERSTRUCTURE DETAILS | U-73-49 | -- |
| SUPERSTRUCTURE DETAILS | U-73-50 | -- |
| SUPERSTRUCTURE DETAILS | U-73-51 | -- |
| SUPERSTRUCTURE DETAILS | U-73-52 | -- |
| SUPERSTRUCTURE DETAILS | U-73-53 | -- |
| SUPERSTRUCTURE DETAILS | U-73-54 | -- |
| SUPERSTRUCTURE DETAILS | U-73-55 | -- |
| SUPERSTRUCTURE DETAILS | U-73-56 | -- |
| SUPERSTRUCTURE DETAILS | U-73-57 | -- |
| SUPERSTRUCTURE DETAILS | U-73-58 | -- |
| SUPERSTRUCTURE DETAILS | U-73-59 | -- |
| SUPERSTRUCTURE DETAILS | U-73-60 | -- |
| SUPERSTRUCTURE DETAILS | U-73-60A | -- |
| ABUTMENT NO. 1 | U-73-61 | -- |
| ABUTMENT NO. 1 DETAILS | U-73-62 | -- |
| ABUTMENT NO. 1 DETAILS | U-73-63 | -- |
| ABUTMENT NO. 1 DETAILS | U-73-64 | -- |
| ABUTMENT NO. 2 | U-73-65 | -- |
| ABUTMENT NO. 2 DETAILS | U-73-66 | -- |
| ABUTMENT NO. 2 DETAILS | U-73-67 | -- |
| ABUTMENT NO. 2 DETAILS | U-73-68 | -- |
| DECORATIVE SURFACE FINISH AT ABUTMENTS | U-73-69 | -- |
| BENT NO. 1 | U-73-70 | -- |
| BENT NO. 1 DETAILS | U-73-71 | -- |
| BENT NO. 1 DETAILS | U-73-72 | -- |
| FINAL FOUNDATION DATA | U-73-73 | -- |
| BILL OF STEEL | U-73-74 | -- |
| BILL OF STEEL | U-73-75 | -- |

## LIST OF STANDARD DRAWINGS

| | DWG. NO. | LAST REV. DATE |
|---|---|---|
| SLIDER PLATES AND DECK DRAINS | STD-1-2 | 3-28-08 |
| PAVEMENT AT BRIDGE ENDS | STD-1-5 | 3-26-14 |
| BRIDGE END DRAIN DETAILS WITH PAVEMENT AT BRIDGE ENDS | STD-1-6 | 4-28-97 |
| BRIDGE END DRAIN DETAILS WITH PAVEMENT AT BRIDGE ENDS | STD-1-7 | 8-24-11 |
| BRIDGE END DRAIN DETAILS 2'-0" x 8'-7" WITH PAVEMENT AT BRIDGE ENDS | STD-1-8 | 5-01-95 |
| STANDARD PILE DETAILS | STD-5-1 | 10-25-93 |
| STANDARD PILE DETAILS | STD-5-2 | 5-01-14 |
| STANDARD SEISMIC DETAILS | STD-6-2 | 11-07-94 |
| REINFORCING BAR SUPPORT DETAILS FOR CONCRETE SLABS | STD-9-1 | 10-07-08 |
| MISCELLANEOUS ABUTMENT & DRAINAGE DETAILS | STD-10-1 | 4-08-05 |
| BRIDGE RAILING WITH STRUCTURAL TUBING | STD-11-1 | 5-01-14 |
| SAFETY APPROACH TO UNDERPASSES GRADING DESIGH AND SLOPE PROTECTION | RD01-SA-1 | 10-15-02 |

## LIST OF SPECIAL PROVISIONS

| | PROV. NO. | LAST REV. DATE |
|---|---|---|
| STEEL STRUCTURES | 602 | 01-01-15 |

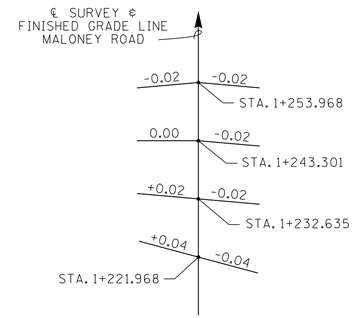


## REINFORCED CONCRETE SLOPE PAVEMENT

PAVE SLOPES AND EXPOSED EARTH UNDER BRIDGES WITH 102MM THICK CEMENT CONCRETE SLAB REINFORCED WITH 6MM GAGE WIRE FABRIC @ 152MM CENTERS AND 283.2 KG. PER 100M² THE WIRE FABRIC REINFORCEMENT SHALL BE PLACED AT ONE-HALF THE DEPTH OF THE SLAB AND EXTEND TO WITHIN 76MM OF ITS EDGE WITH A 305MM LAP REQ'D. ON ALL SHEETS. THE COST OF THE WIRE FABRIC REINFORCEMENT TO BE INCLUDED IN THE UNIT PRICE BID FOR ITEM 709-04, REINFORCED CONCRETE SLOPE PAVEMENT. 13 MILLIMETER PREMOULDED EXPANSION JOINTS WITHOUT LOAD TRANSFERS SHALL BE FORMED ABOUT ALL STRUCTURES AND FEATURES PROJECTING THROUGH, IN OR AGAINST THE SLAB. THE SLAB SHALL BE GROOVED PARALLEL WITH AND AT RIGHT ANGLES TO THE UNDER ROADWAY CENTER LINE AT 1828MM CENTERS. DEPTH OF GROOVE TO BE NOT LESS THAN 25MM. (SEE STD. DWG. RD01-SA-1 FOR LIMITS OF SLOPE PROTECTION.)

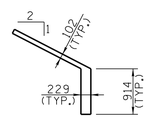


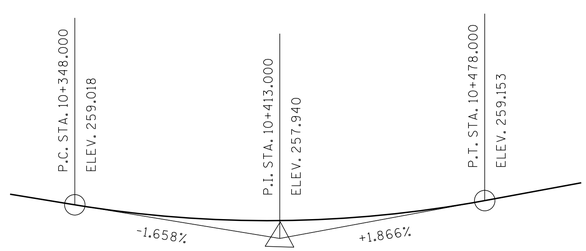


130.000 m V.C.

GRADE SKETCH

STATE ROUTE 115

## TRANSITION SKETCH

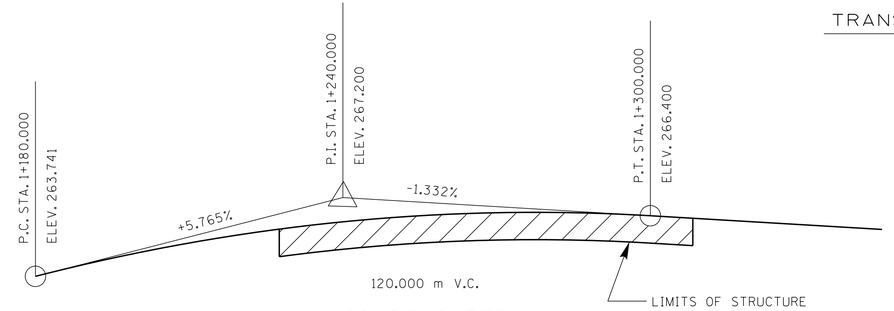


120.000 m V.C.

GRADE SKETCH

MALONEY ROAD

NOTE: ALL DIMENSIONS SHOWN IN MILLIMETERS, WITH THE EXCEPTION OF STATIONS AND ELEVATIONS, UNLESS OTHERWISE NOTED.

STATE OF TENNESSEE
DEPARTMENT OF TRANSPORTATION
BRIDGE NO. 1
LAYOUT OF BRIDGE
MALONEY ROAD
OVER
STATE ROUTE 115
STATION 1+269.563
KNOX COUNTY
2015

CORRECT _____ ENGINEER OF STRUCTURES

| | | | |
|---|---|---|---|
| DESIGNED BY | ADAM PRICE | DATE | 1-15 |
| DRAWN BY | T. KIRK | DATE | 6-15 |
| SUPERVISED BY | FIELDS & DIETERS | DATE | 6-15 |
| CHECKED BY | ADAM PRICE | DATE | 9-15 |

GN1133F.DGN

## GENERAL NOTES:

SPECIFICATIONS: STANDARD ROAD AND BRIDGE SPECIFICATIONS OF THE TENNESSEE DEPARTMENT OF TRANSPORTATION (JANUARY 1, 2015 EDITION).

LOADING: HL-93 LIVE LOADING; SEISMIC CATEGORY "A" WITH As = 0.190, Sds = 0.340, Sd1 = 0.119, (1000 YEAR RETURN PERIOD). DEAD LOAD INCLUDES 171 KG/M² FOR FUTURE WEARING SURFACE.

DESIGN SPECIFICATIONS: AASHTO LRFD SEVENTH EDITION, 2014, AND THE 2011 AASHTO GUIDE SPECIFICATIONS FOR LRFD SEISMIC BRIDGE DESIGN, EDITION 2 (WITH INTERIMS.)

CONCRETE: TO BE CLASS "A" f.'c = 21 MPA EXCEPT AS NOTED OTHERWISE.

CLASS "D" CONCRETE FOR BRIDGE DECKS SHALL BE IN ACCORDANCE WITH SECTION 604 OF THE STANDARD SPECIFICATIONS.

BRIDGE DECK SURFACE FINISH: TO BE IN ACCORDANCE WITH METHOD 3 IN ARTICLE 604.22 OF THE STANDARD SPECIFICATIONS.

BRIDGE DECK FORMS: BRIDGE DECK FORMS FOR CONCRETE DECKS SHALL BE CONSTRUCTED USING EITHER REMOVABLE FORMS OR PERMANENT FORMS. PERMANENT FORMS SHALL BE REMAIN-IN-PLACE STEEL. IN EITHER CASE, FORMS SHALL BE ATTACHED BY MEANS OTHER THAN WELDING TO MAIN STRUCTURAL MEMBERS OR REINFORCING STEEL. SEE ARTICLE 604.05 OF THE STANDARD SPECIFICATIONS.

BEARING DEVICES SHALL BE IN ACCORDANCE WITH THE DETAILS AND DIMENSIONS SHOWN ON DRAWING NO. U-73-64 FOR ABUTMENT NO. 1, U-73-68 FOR ABUTMENT NO. 2 AND U-73-72 BOR BENT NO. 1.

REINFORCING STEEL: SHALL BE ASTM A615M GRADE 420 UNLESS NOTED OTHERWISE. SEE SECTION 604 AND 907 OF THE STANDARD SPECIFICATIONS.

SPECIAL NOTE: FOUNDATIONS FOR BENTS SHALL BE EXCAVATED TO THE BOTTOM OF FOOTING ELEVATIONS SHOWN; ROD SOUNDINGS SHALL THEN BE MADE AS DIRECTED BY THE ENGINEER. FROM THE RESULTS OBTAINED THE ENGINEER WILL DECIDE IF PILES WILL BE USED OR THE FOOTINGS CARRIED TO ROCK. COST OF ROD SOUNDING TO BE INCLUDED IN THE UNIT PRICE BID FOR OTHER ITEMS. NO REINFORCING STEEL FOR BENT COLUMNS OR FOOTINGS SHALL BE ORDERED UNTIL FINAL ELEVATIONS HAVE BEEN DETERMINED.

PILES: TO BE HP 250X62 DRIVEN TO REFUSAL ON ROCK OR A MINIMUM BEARING OF 50 TONNE FOR THE BENTS AND FOR THE ABUTMENTS.

NOTE: PILES SHALL BE EQUIPPED WITH CAST STEEL POINTS. ALSO, SEE STANDARD DRAWING STD-5-1 FOR ADDITIONAL NOTES.

BRIDGE RAIL SYSTEM: BUILD BRIDGE RAILINGS ACCORDING TO STANDARD DRAWING STD-11-1. THE RAILING SHALL BE FORMED AND CAST PLUMB, NOT PERPENDICULAR TO THE SLAB. THE DIMENSIONS AT THE TRAFFIC FACE SHALL BE KEPT CONSTANT, WITH VARIATION DUE TO CROSS SLOPE ACCOMMODATED AT THE REAR FACE.

NOTE: THE CONTRACTOR SHALL PROVIDE 100% CONVENTIONAL FALL PROTECTION FOR WORKERS INSTALLING DECKING ABOVE 4572mm.

SPECIAL NOTE FOR UTILITIES: IT IS INTENDED THAT THE COST OF MATERIALS AND LABOR NECESSARY FOR THE COMPLETE INSTALLATION OF UTILITIES SHALL NOT BE PAID FOR AS A BRIDGE ITEM. THE CONTRACTOR SHALL COOPERATE WITH OTHERS IN THE INSTALLATION OF UTILITIES WITH NO ADDITIONAL COMPENSATION ALLOWED THE CONTRACTOR AS A RESULT.

SHOP DRAWINGS: SEE SECTION 105.02 OF THE STANDARD SPECIFICATIONS.

WELDING: SEE SECTION 602 OF THE STANDARD SPECIFICATIONS AND NOTES ON DRAWING NO. U-73-46.

RADIOGRAPHIC, ULTRASONIC, AND MAGNETIC INSPECTION: SEE SECTION 602 OF THE STANDARD SPECIFICATIONS AND NOTES ON DRAWING NO. U-73-41.

STEEL STRUCTURES: SEE TENNESSEE STANDARD SPECIFICATIONS SECTION 602 AND NOTES ON DRAWING NO. U-73-41.

VALUE ENGINEERING ALTERNATE BRIDGE DESIGN CRITERIA: ALTERNATE BRIDGE DESIGN PROPOSALS MAY NOT DIMINISH THE FUNCTIONAL OR STRUCTURAL EQUIVALENCY OF THE BRIDGE AND MUST MEET OR EXCEED BOTH THE SERVICE LEVEL AND ULTIMATE CAPACITIES OF THE CONTRACT PLANS STRUCTURE. ADDITIONALLY, THE WATERWAY OPENING AND FLOOD CLEARANCES MAY NOT BE REDUCED CLEARANCES MAY NOT BE REDUCED; FOR GRADE SEPARATIONS, THE HORIZONTAL CLEARANCES MAY NOT BE REDUCED, NOR MAY THE VERTICAL CLEARANCES BE LESS THAN THE MINIMUM ACCEPTABLE FOR THE TYPE FACILITY CROSSED.

FINISHING CONCRETE SURFACES: CONCRETE FINISHING SHALL BE IN ACCORDANCE WITH SECTION 604.21 OF THE TENNESSEE STANDARD SPECIFICATIONS. A CLASS I FINISH FOLLOWED BY AN APPLIED TEXTURE FINISH SHALL BE USED IN LIEU OF A CLASS II FINISH. NO TEXTURE FINISH SHALL BE APPLIED PRIOR TO COMPLETION OF PAVING AND HAULING OPERATIONS AT THE BRIDGE SITE. THE APPLIED TEXTURE FINISH SHALL BE MEASURED AND PAID FOR UNDER ITEM NO. 604M04.01.

PROTECTION OF SUBSTRUCTURES: SINCE THIS BRIDGE UTILIZES WEATHERING STEEL, THE CONTRACTOR MUST TAKE SPECIAL PRECAUTIONS TO PREVENT STAINING OF BENTS AND ABUTMENTS. PRIOR TO THE ERECTION OF ANY STEEL, THE TOPS AND SIDES OF THE COMPLETED SUBSTRUCTURES SHALL BE PROTECTED FROM STAINING BY WRAPPING WITH TRANSLUCENT, REINFORCED, HIGH DENSITY, TWO-PLY, CROSS-LAMINATED POLYETHYLENE. IN LIEU OF THIS PROTECTION, THE CONTRACTOR MAY ELECT TO THOROUGHLY CLEAN THE CONCRETE OF RUST STAINING BY SANDBLASTING OR OTHER APPROVED METHODS, PRIOR TO APPLYING A TEXTURE-COATED FINISH. NO SEALANT-TYPE MATERIALS SHALL BE APPLIED WHICH ARE INCOMPATIBLE WITH THE TEXTURE-COATED FINISH UNLESS THEY CAN BE THOROUGHLY REMOVED PRIOR TO APPLYING THE FINISH. TEXTURE COATING OF THE SUBSTRUCTURE SHOULD BE DELAYED UNTIL AFTER THE DECK IS COMPLETED. AFTER A SUBSTRUCTURE HAS RECEIVED ITS FINAL FINISH, THE TOP AND SIDES SHALL BE PROTECTED FROM STAINING BY WRAPPING WITH REINFORCED POLYETHYLENE, WHICH, IF BEING REUSED, SHALL BE IN GOOD CONDITION AND FREE FROM HOLES AND TEARS. IT SHALL BE THE CONTRACTOR'S RESPONSIBILITY TO PROTECT THE SUBSTRUCTURES FROM STAINING FOR THE DURATION OF THE CONTRACT. ANY CORRECTIVE TEXTURE COATING SHALL BE AT HIS EXPENSE. COST TO BE INCLUDED IN THE UNIT PRICE BID FOR OTHER ITEMS.

BLAST CLEANING: ALL GIRDERS AND ALL FAYING SURFACES OF FIELD SPLICES OF ALL GIRDERS SHALL BE BLAST-CLEANED IN ACCORDANCE WITH THE STEEL STRUCTURES PAINTING COUNCIL SURFACE PREPARATION SPECIFICATIONS "NO. 6 COMMERCIAL BLAST CLEANING" SSPC-SP 6. PRIOR TO BOLTING, ANY LOOSE RUST ON THE FAYING SURFACES SHALL BE REMOVED.

UTILITIES: WHERE UNDERGROUND UTILITIES MAY BE ENCOUNTERED DURING CONSTRUCTION, IT SHALL BE THE CONTRACTOR'S RESPONSIBILITY TO PROTECT THESE UTILITIES FROM ANY DAMAGE. WHERE RELOCATION OR READJUSTMENT OF THE UTILITY MAY BE REQUIRED, IT SHALL BE DONE BY THE OWNER OF THE SAME.

FINAL APPEARANCE: PRIOR TO FINAL ACCEPTANCE, ALL STRUCTURAL STEEL SHALL BE FREE OF GREASE, OIL, CHALK MARKS, PAINT, CONCRETE SPATTER AND SIMILAR SOILAGE. DEPENDING ON THE LOCATION, WITH RESPECT TO VIEW, AND SEVERITY OF THE FORE-GOING SOILAGE, THE STRUCTURAL STEEL SHALL BE CLEANED UNDER THE PROVISIONS OF ONE OF THE FOLLOWING STEEL STRUCTURES PAINTING COUNCIL SURFACE PREPARATION SPECIFICATIONS: "NO. 1 SOLVENT CLEANING" SSPC-SP 1, "NO. 2 HAND CLEANING" SSPC-SP 2, "NO. 3 POWER TOOL CLEANING" SSPC-SP 3 OR "NO. 7 BRUSH-OFF BLAST CLEANING" SSPC-SP 7.

WEATHERING BOLTS: ALL BOLTS SHALL BE ASTM A-325, TYPE 3 UNLESS OTHERWISE NOTED. ALL BOLTS, NUTS AND WASHERS SHALL HAVE THE SAME WEATHERING CHARACTERISTICS AS THE STRUCTURAL STEEL USED. IN LIEU OF USING DIRECT TENSION INDICATORS (DTI'S), ALL BOLTS SHALL BE INSTALLED BY EITHER TURN-OF-NUT TIGHTENING OR CALIBRATED WRENCH TIGHTENING IN ACCORDANCE WITH THE AASHTO LRFD BRIDGE CONSTRUCTION SPECIFICATIONS, CURRENT EDITION.

WEATHERING STEEL: ALL WEATHERING STEEL SHALL HAVE ATMOSPHERIC CORROSION RESISTANCE EQUAL TO OR BETTER THAN TWO TIMES THAT OF CARBON STRUCTURAL STEEL WITH COPPER.

NOTE: THE FILLS AT THE ENDS OF THE BRIDGE SHALL BE IN PLACE AND THOROUGHLY COMPACTED BEFORE ANY ABUTMENT PILES ARE DRIVEN.

CONST. NO. 47026-3279-14

| PROJECT NO. | YEAR | SHEET NO. |
|---|---|---|
| NH-115(54) | 2015 | |

REVISIONS

| NO. | DATE | BY | BRIEF DESCRIPTION |
|---|---|---|---|
| | | | |

## ESTIMATED QUANTITIES

| | ITEM NO. | DESCRIPTION | UNIT | TOTAL | SUPERSTRUCTURE | ABUTMENT NO. 1 | BENT NO. 1 | ABUTMENT NO. 2 |
|---|---|---|---|---|---|---|---|---|
| 2 | 204M02.01 | DRY EXCAVATION (BRIDGES) | M3 | 256 | | 65 | 124 | 67 |
| 5 | 303M01.02 | GRANULAR BACKFILL (BRIDGES) | TONNE | 36 | | 18 | | 18 |
| 3 | 602M04.01 | STEEL STRUCTURES (BRIDGE NO. 1) | L.S. | 1 | | | | |
| | 604M02.03 | EPOXY COATED REINFORCING STEEL | KG | 75172 | 72988 | 1095 | | 1089 |
| | 604M03.01 | CLASS A CONCRETE (BRIDGES) | M3 | 249 | | 55 | 139 | 55 |
| | 604M03.02 | STEEL BAR REINFORCEMENT (BRIDGES) | KG | 23806 | | 3473 | 16988 | 3345 |
| 1 | 604M03.04 | PAVEMENT @ BRIDGE ENDS | M2 | 224 | | | | |
| | 604M03.09 | CLASS D CONCRETE (BRIDGE DECK) | M3 | 337 | 337 | | | |
| | 604M04.01 | APPLIED TEXTURE FINISH (NEW STRUCTURES) | M2 | 852 | | | | |
| | 604M05.31 | BRIDGE DECK GROOVING (MECHANICAL) | M2 | 1515 | | | | |
| | 606M02.03 | STEEL PILES (250 mm) | M | 724 | | 231 | 290 | 203 |
| 8 | 606M02.06 | PILE TIPS (STEEL PILES, 250 mm) | EACH | 96 | | 18 | 60 | 18 |
| 7 | 620M05 | CONCRETE PARAPET WITH STRUCTURAL TUBING (STD-11-1) | M | 186 | | | | |
| | 709M04 | REINFORCED CONCRETE SLOPE PAVEMENT | M3 | 56 | | | | |
| 4 | 710M09.01 | 150 mm PERF. PIPE WITH VERTICAL DRAIN SYSTEM | M | 49 | | 24 | | 25 |
| | 710M09.02 | 150 mm PIPE UNDERDRAIN | M | 10 | | 5 | | 5 |

1 NOTE: PRIOR TO CONSTRUCTION OF THE PAVEMENT AT BRIDGE ENDS, THE CONTRACTOR SHALL SUBMIT A PROPOSED BILL OF STEEL TO THE ENGINEER FOR APPROVAL.

2 NOTE: EXCAVATION BASED ON FINAL PROFILE AT ABUTMENTS AND BENTS.

3 NOTE: LUMP SUM: TOTAL ESTIMATED WEIGHT OF 307630 KG. OF STRUCTURAL STEEL INCLUDES GIRDER BEARING DEVICES, GIRDERS, FIELD SPLICES, SHEAR CONNECTORS, BOLTS, TAB CONNECTOR PLATES, STIFFENERS, AND CROSS-FRAMES. ALSO SEE TENNESSEE STANDARD SPECIFICATIONS SECTION 602.49 AND 602.50.

4 NOTE: COST OF POLYETHYLENE SHEETING AND ALL MISCELLANEOUS ITEMS NECESSARY FOR INSTALLATION TO BE INCLUDED IN THE UNIT PRICE BID FOR PERFORATED PIPE.

5 GRANULAR BACKFILL SHALL BE CLASS "A" GRADING "D" MATERIAL. SEE STANDARD DRAWING STD-10-1.

6 NOTE: THE COST OF BITUMINOUS-FIBERBOARD AND ALL MISCELLANEOUS JOINT MATERIAL TO BE INCLUDED IN THE UNIT PRICE BID FOR OTHER ITEMS.

7 NOTE: COST OF (2) TYPE 1 BRIDGE DECK GRATE DRAINS AND 13 TYPE 2 BRIDGE DECK GRATE DRAINS TO BE INCLUDED IN THE UNIT PRICE BID FOR THE PARAPET.

8 NOTE: THE UNIT PRICE BID FOR THE CAST STEEL POINTS SHALL INCLUDE FURNISHING AND INSTALLATION TO THE PILES.

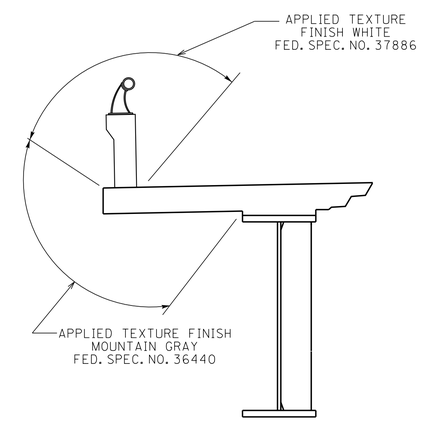


## APPLIED TEXTURE FINISH SKETCH

NOTE: IN ADDITION TO THE SURFACES SHOWN IN THE APPLIED TEXTURE FINISH SKETCH, ALL EXPOSED SURFACES OF THE WINGWALLS, ABUTMENT BEAMS, BENTS, AND EXTERIOR PORTIONS OF ENDWALLS ARE TO RECEIVE AN APPLIED TEXTURE FINISH (MOUNTAIN GRAY, FED. SPEC. NO. 36440).

DIVISION OF STRUCTURES METRIC

NOTE: ALL DIMENSIONS SHOWN IN MILLIMETERS, WITH THE EXCEPTION OF STATIONS AND ELEVATIONS, UNLESS OTHERWISE NOTED.

STATE OF TENNESSEE
DEPARTMENT OF TRANSPORTATION
BRIDGE NO. 1
GENERAL NOTES AND
ESTIMATED QUANTITIES
MALONEY ROAD
OVER
STATE ROUTE 115
STATION 1+269.563
KNOX COUNTY
2015

CARRINA M. DIETERS — AGRICULTURE — STATE OF TENNESSEE

CORRECT Wayne J. Sieg
ENGINEER OF STRUCTURES

| | | | |
|---|---|---|---|
| DESIGNED BY | ADAM PRICE | DATE | 12-14 |
| DRAWN BY | CHRIS STAPLER | DATE | 07-15 |
| SUPERVISED BY | C.M.D./J.W.F. | DATE | 07-15 |
| CHECKED BY | ADAM PRICE | DATE | 9-15 |

U-73-37

FD1133F.DGN

CONST. NO. 47026-3279-14

| PROJECT NO. | YEAR | SHEET NO. |
|---|---|---|
| NH-115(54) | 2015 | |

REVISIONS

| NO. | DATE | BY | BRIEF DESCRIPTION |
|---|---|---|---|
| | | | |

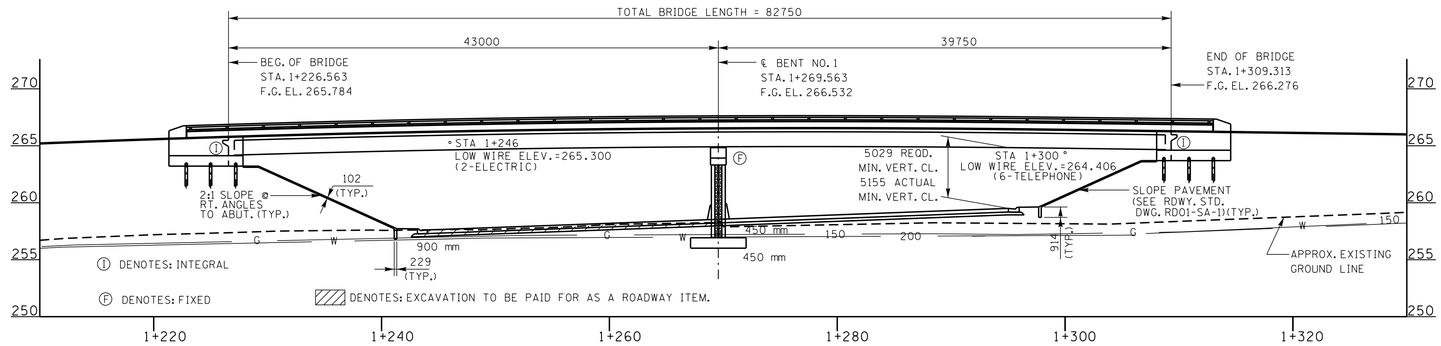


ELEVATION

(AT RT. ∆S TO ℄ SURVEY MALONEY ROAD)
(SCALE: 1:15)

MALONEY ROAD
PI 1+196.250
N 176,355.2795
E 784,687.2208
∆ 52° 45′ 16″ (RT)
R 98.200
Lc 90.417
T 48.698
E 11.412
S.E. 4.0%
TRANS. LENGTH 32
DESIGN SPEED 50km/h

STATE ROUTE 115
PI 10+311.961
N 176,252.1860
E 784,783.6215
∆ 12° 39′ 44″ (LT)
R 1500.000
Lc 331.498
T 166.427
E 9.204
S.E. 3.9%
TRANS. LENGTH 102
DESIGN SPEED 110km/h

DESIGN SPECIFICATIONS: AASHTO 2014 LRFD BRIDGE DESIGN SPECIFICATIONS (7TH EDITION) WITH INTERIMS. SEISMIC CATEGORY "A" WITH AS=0.190, SDS=0.340, SD1=0.119 (1000 YEAR RETURN PERIOD).

NOTES:

REQUIRED:

1) SUFFICIENT GROUND, ROCK, AND CORING INFORMATION FOR BRIDGE FOUNDATIONS.
2) APPROXIMATE EXISTING GROUND AND ROCK LINE.

BENCHMARKS:

BENCHMARK: "POWER" (3RD ORDER GPS)
ELEVATION 259.364
DISK ATOP A 5/8" REBAR STAMPED "POWER"
1996 AND DRIVEN FLUSH WITH GROUND
LOCATED EAST SIDE OF SR115
AT LOG MILE 2.15 IN PARKING LOT

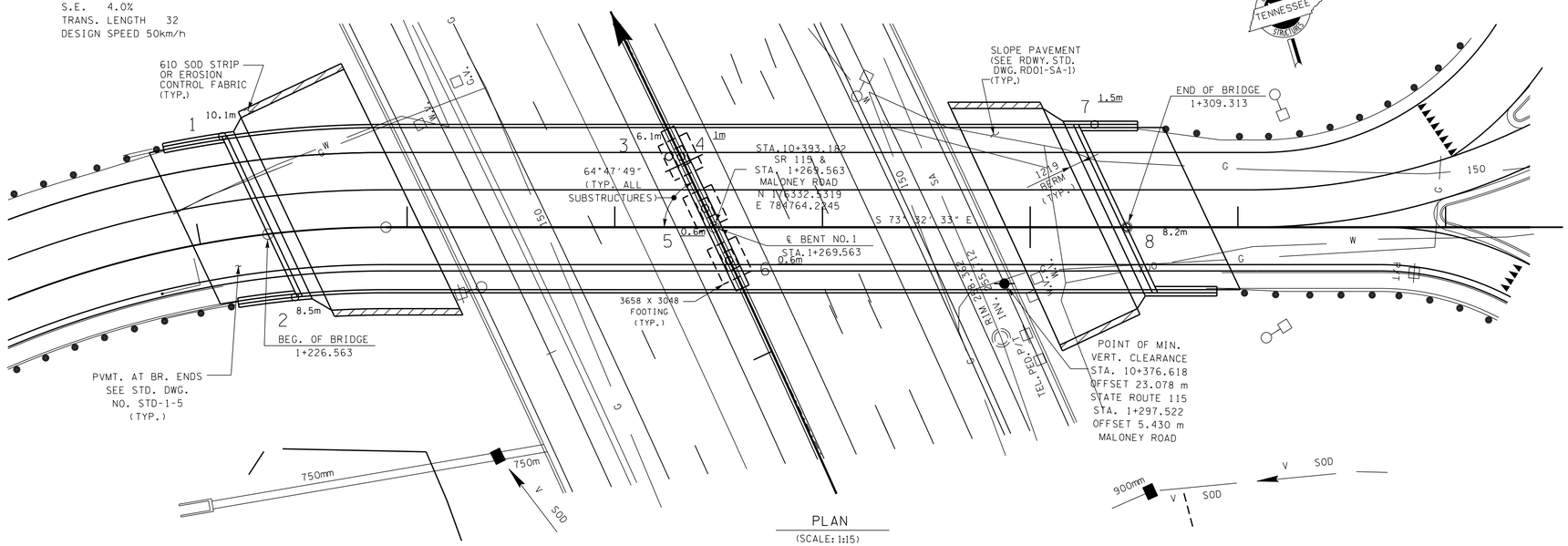


PLAN

(SCALE: 1:15)

NOTE: THIS DRAWING IS FOR FOUNDATION DATA ONLY AND IS NOT TO BE USED AS A LAYOUT.

NOTE: ALL DIMENSIONS SHOWN IN MILLIMETERS, WITH THE EXCEPTION OF STATIONS AND ELEVATIONS, UNLESS OTHERWISE NOTED.

STATE OF TENNESSEE
DEPARTMENT OF TRANSPORTATION
BRIDGE NO. 1
FOUNDATION DATA
MALONEY ROAD
OVER
STATE ROUTE 115
STATION 1+269.563
KNOX COUNTY
2015

CORRECT Wayne G. Seger
ENGINEER OF STRUCTURES

U-73-38

DESIGNED BY C.DIETERS DATE 11-14
DRAWN BY C.DIETERS DATE 11-14
SUPERVISED BY W. SEGER DATE 11-14
CHECKED BY ADAM PRICE DATE 09-15

FD1133F.DGN

CONST. NO. 47026-3279-14

| TYPE | YEAR | PROJECT NO. | SHEET NO. |
|---|---|---|---|
| | 2015 | NH-115(54) | |
| | | | |
| | | | |
| | | | |

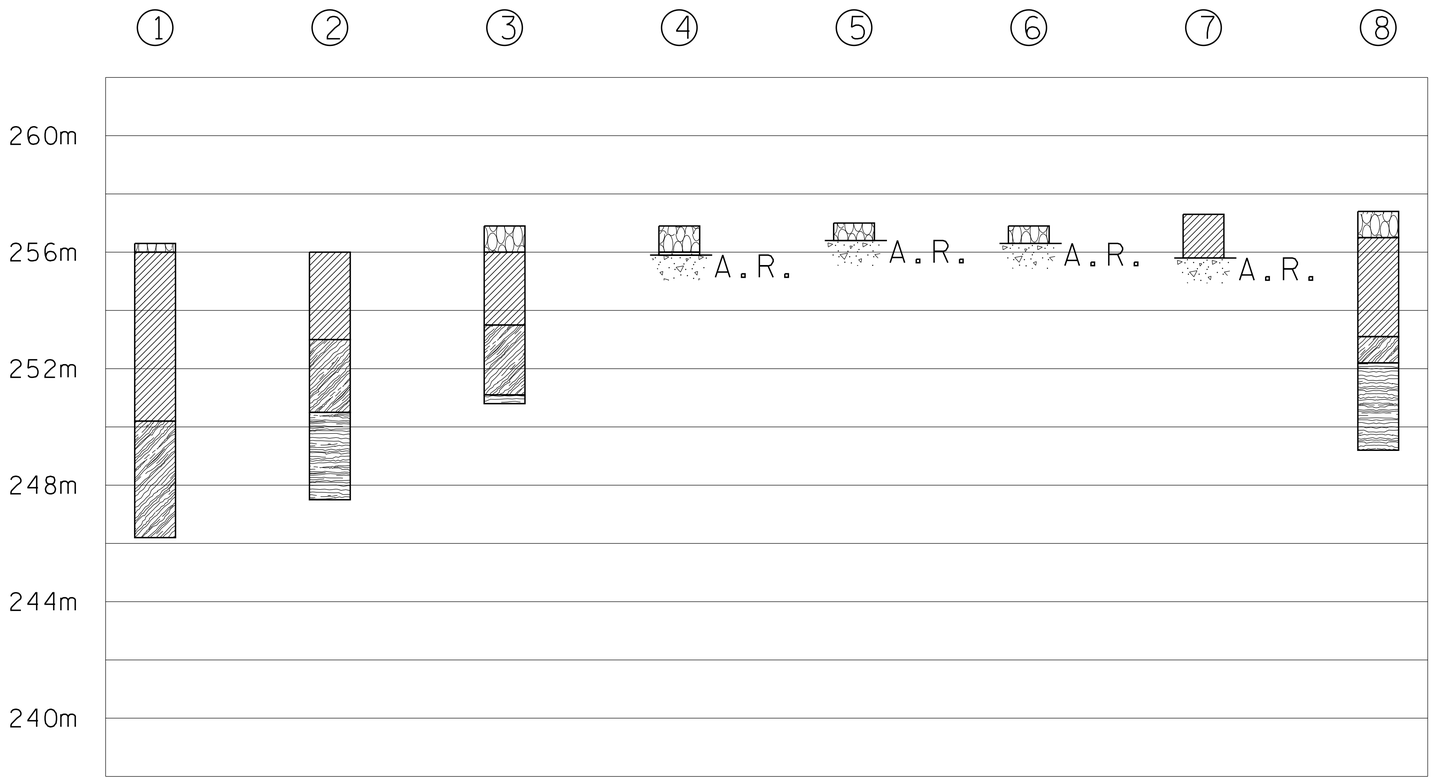


## LEGEND

- ASPHALT & GRAVEL
- CLAY (TYPE A MATERIAL)
- SHALE-WEATHERED TO SLIGHTLY WEATHERED (TYPE C MATERIAL)
- SHALE (TYPE C MATERIAL)
- CONCRETE

TYPE MATERIAL-SEE DEFINITION OF TERMS USED FOR EARTHWORK GRADING CALCULATIONS SHEET.
A.R.= AUGER REFUSAL

| BORING NO. | STATION | OFFSET | GROUND ELEVATION | ROCK ELEVATION | TOTAL DEPTH |
|---|---|---|---|---|---|
| 1 | 1+223.6 | LT 9.9m | 256.3m | 250.2m | 10.1m |
| 2 | 1+228.8 | RT 6.3m | 256.0m | 250.5m | 8.5m |
| 3 | 1+265.2 | LT 6.8m | 256.9m | 251.1m | 6.1m |
| 4 | 1+266.4 | LT 6.8m | 256.9m | N/A | 1.0m |
| 5 | 1+268.7 | LT 1.8m | 257.0m | N/A | 0.6m |
| 6 | 1+271.0 | RT 3.2m | 256.9m | N/A | 0.6m |
| 7 | 1+306.2 | LT 9.9m | 257.3m | N/A | 1.5m |
| 8 | 1+309.3 | ℄ | 257.4m | 252.2m | 8.2m |

NOTE:
BORING DEPICTIONS SHOWN ON FOUNDATION DATA SHEET INDICATE GENERAL SOIL AND ROCK TYPES AT THE SPECIFIC BORING LOCATIONS.

SEALED BY

TENNESSEE METRIC D.O.T.

COORDINATE VALUES ARE NAD/83(1995) AND ARE DATUM ADJUSTED BY THE FACTOR 1.00 & TIED TO THE TCRN.

STATE OF TENNESSEE
DEPARTMENT OF TRANSPORTATION

BRIDGE NO. 1
FOUNDATION DATA
MALONEY ROAD
OVER
STATE ROUTE 115
STATION 1+269.563
KNOX COUNTY
2015

U-73-39

9/21/2015 1:38:40 PM
C:\FILES\DetailCheck by County and Project & Misc\Knox\Bridge No.1,Maloney Road over SR 115\Foundation Data\10024L.04_BoringProfiles.47014.dgn

TENNESSEE D.O.T.
DESIGN DIVISION
FILE NO.

CONST. NO. 47026-3279-14

| TYPE | YEAR | PROJECT NO. | SHEET NO. |
|---|---|---|---|
| | 2015 | NH-115(54) | |
| | | | |
| | | | |
| | | | |

4-203.02

A. SOIL MATERIAL

SOIL MATERIAL IS MATERIAL THAT IS PREDOMINANTLY MADE UP OF NATURALLY OCCURRING MINERAL PARTICLES WHICH ARE FAIRLY READILY SEPARATED INTO RELATIVELY SMALL PIECES, AND IN WHICH THE MASS MAY CONTAIN AIR, WATER OR ORGANIC MATERIALS. THIS MATERIAL MAY CONTAIN ROCK PIECES IN THE FORM OF DISCONNECTED SLABS, LENSES, OR BOULDERS OF LESS THAN APPROXIMATELY 0.5 CUBIC YARDS. THE MAIN SOIL GROUPS CONSIST OF CLAY, SILT, SAND, GRAVEL, COBBLES, BOULDERS (LESS THAN 0.5 CUBIC YARD VOLUME) OR A COMBINATION OF ANY OF THE CONSTITUENTS. FOR CONSTRUCTION PURPOSES, THIS MATERIAL WOULD TYPICALLY BE CONSIDERED TO BE EXCAVATABLE BY CONVENTIONAL EXCAVATION MACHINERY SUCH AS PANS, TRACK HOES, OR FRONT END EXCAVATORS/LOADERS. THIS MATERIAL WOULD HAVE A SHRINK FACTOR AS GIVEN IN THE SHRINK FACTORS SHOWN IN SECTION 2-145.10 OF THE DESIGN GUIDELINES OR AS RECOMMENDED BY THE GEOTECHNICAL ENGINEERING SECTION OF THE MATERIALS AND TESTS DIVISION.

4-203.02

B. SOLID ROCK MATERIAL

SOLID ROCK MATERIAL IS THAT NATURALLY OCCURRING MATERIAL COMPOSED OF MINERAL PARTICLES SO FIRMLY BONDED TOGETHER THAT RELATIVELY GREAT EFFORT IS REQUIRED TO SEPARATE THE PARTICLES (I.E. BLASTING OR HEAVY CRUSHING FORCES). FOR CONSTRUCTION PURPOSES, THIS MATERIAL WOULD TYPICALLY HAVE TO BE BLASTED TO SEPARATE INTO PIECES SMALL ENOUGH TO LOAD AND TRANSPORT ON EARTH MOVING TRUCKS AND WHICH WHEN SUBJECTED TO PROPER PRE-SPLIT AND PRODUCTION BLASTING WOULD RESULT IN A UNIFORM STABLE ROCK CUT FACE. NOTE THAT THIS MATERIAL WOULD NOT BY DEFINITION NECESSARILY BE A PROVEN SOURCE OF ANY ROCK TYPE AGGREGATE SUCH AS SOLID ROCK, GRADED SOLID ROCK, RIP RAP, OR OTHER ROCK AGGREGATE CONSTRUCTION PRODUCTS. THIS MATERIAL WOULD HAVE A SIGNIFICANT SWELL FACTOR AS GIVEN IN SWELL FACTORS SHOWN IN SECTION 2-145.10 OF THE DESIGN GUIDELINES OR AS RECOMMENDED BY THE GEOTECHNICAL ENGINEERING SECTION OF THE MATERIALS AND TESTS DIVISION.

4-203.02

C. SOFT ROCK OR DEGRADABLE ROCK

THIS MATERIAL IS THAT NATURALLY OCCURRING MATERIAL COMPOSED OF MINERAL PARTICLES THAT ARE SO FIRMLY BONDED SUCH THAT THEY ARE NOT FAIRLY READILY SEPARATED INTO SMALL PIECES YET HAS SUCH RELATIVELY LOW BONDING STRENGTH THAT WOULD ALLOW FOR SEPARATING INTO SMALL PIECES THROUGH MODERATE TO HEAVY CRUSHING FORCES. FOR CONSTRUCTION PURPOSES THIS MATERIAL WOULD HAVE TO BE SUBJECTED TO RIPPING TYPE EQUIPMENT, HOE RAMS, OR RUGGED USE OF A LARGE BULLDOZER IN ORDER TO SEPARATE THE MATERIAL SUCH THAT IT CAN BE READILY LOADED INTO EARTH MOVING TRUCKS. THESE MATERIALS WOULD TYPICALLY BE SHALES, CLAYSTONES, SILTSTONES, WEATHERED SANDSTONES, WEATHERED SCHIST AND WEATHERED GNEISS. THIS MATERIAL WOULD HAVE A RELATIVELY SMALL SHRINK OR SWELL FACTOR DEPENDING ON THE TYPE MATERIAL AND THE DEGREE OF WEATHERING, DISINTEGRATION, OR DEGRADATION.

4-203.02

D. TRANSITIONAL MATERIALS

THIS MATERIAL IS THAT MATERIAL COMPRISED OF A COMBINATION OF SOIL AND ROCK (MATERIALS A, B, AND C AS DEFINED IN SECTION 4-203.02) OCCURRING IN EITHER NON-UNIFORM INTERBEDDED LAYERS OF THE ABOVE MATERIALS (I.E. SHALE MATERIAL WITH RELATIVELY THIN LAYERS OF SOLID ROCK SUCH AS HARD LIMESTONE) OR ERRATIC LOCALIZED CHANGES OF MATERIAL TYPES BOTH LATERALLY AND WITH DEPTH (SUCH AS A GEOLOGIC FORMATION RESULTING IN PINNACLED ROCK COLUMNS, FLOATING BOULDERS OR LENSES INTERCALATED WITH CLAY SOIL, A COMMON OCCURRENCE IN CERTAIN REGIONS OF TENNESSEE). FOR CONSTRUCTION PURPOSES, THIS MATERIAL MAY HAVE TO BE EXCAVATED USING A COMBINATION OF EXCAVATION METHODS SUCH AS BLASTING OF ROCK PINNACLES, LAYERS OR BOULDERS ALONG WITH A RIPPING OF WEATHERED ROCK AND EXCAVATING OF SOIL WITH TRACK HOES OR LOADERS ALL WITHIN A LOCALIZED AREA. THIS MATERIAL WOULD NOT BE SUITABLE FOR THE USE OF EXCAVATING PAN TYPE EQUIPMENT.

STATE OF TENNESSEE
DEPARTMENT OF TRANSPORTATION

BRIDGE NO. 1
FOUNDATION DATA
MALONEY ROAD
OVER
STATE ROUTE 115
STATION 1+269.563
KNOX COUNTY
2015

U-73-40

9/21/2015 1:39:40 PM
C:\FILES\Detail Check by County and Project & Misc\Knox\Bridge No.1, Maloney Road over SR 115\Foundation Data\00241-04-SOILS definition of terms-47014.dgn

SP1133F.DGN

| CONST. NO. 47026-3279-14 | | |
|---|---|---|
| PROJECT NO. | YEAR | SHEET NO. |
| NH-115(54) | 2015 | |

REVISIONS

| NO. | DATE | BY | BRIEF DESCRIPTION |
|---|---|---|---|
| | | | |

## GENERAL NOTES:

NOTE: NO PORTION OF THE PARAPET SHALL BE POURED UNTIL THE ENTIRE DECK SLAB IS IN PLACE.

NOTE: WHEN POURING SLAB, PROVISIONS SHALL BE MADE FOR SETTING REINFORCING STEEL FOR PARAPET. THE PARAPET SHALL NOT BE POURED UNTIL THE SLAB IS POURED AND CURED. WHEN POURING PARAPET, PROVISIONS SHALL BE MADE FOR SETTING ANCHOR BOLTS FOR PARAPET RAILS. ALSO SEE STD. DWG. NO. STD-11-1.

NOTE: OUTSIDE EDGE OF SLAB AND BRIDGE RAIL TO CONFORM TO HORIZONTAL CURVE.

NOTE: THE CONCRETE DECK SHALL NOT BE POURED UNTIL ALL STRUCTURAL STEEL IS ERECTED AND ALL WELDING AND/OR BOLTING COMPLETE.

APPROVAL OF MATERIALS: NO FABRICATION SHALL BE STARTED UNTIL THE MATERIALS INVOLVED HAVE BEEN APPROVED BY THE TENNESSEE DEPARTMENT OF TRANSPORTATION, DIVISION OF MATERIALS AND TESTS WITH A COPY OF THE TEST REPORTS ALSO GOING TO THE TENNESSEE DEPARTMENT OF TRANSPORTATION, DIVISION OF MATERIALS AND TESTS.

IDENTITY OF MAIN MATERIALS: SEE SECTION 602 OF THE STANDARD SPECIFICATIONS.

STRUCTURAL STEEL: SHALL CONFORM TO ASTM A709M GRADE 345W UNLESS OTHERWISE NOTED. ALL STRUCTURAL STEEL FOR GIRDER FLANGES IN TENSION AND ALL WEBS SHALL MEET THE SUPPLEMENTAL REQUIREMENTS FOR LONGITUDINAL CHARPY V-NOTCH TESTS SPECIFIED IN THE ASTM SPECIFICATIONS. ZONE 2 OF NON-FRACTURE CRITICAL CRITERIA SHALL APPLY.

WELDING: ANSI/AASHTO/AWS D1.5 CURRENT EDITION BRIDGE WELDING CODE AND SECTION 602 OF THE STANDARD SPECIFICATIONS.

FIELD CONNECTIONS: SHALL BE 25MMØ HIGH TENSILE STRENGTH BOLTS ASTM-A325 TYPE 3 UNLESS OTHERWISE SHOWN. SEE AASHTO LRFD BRIDGE CONSTRUCTION SPECIFICATIONS ART. 11.3.2 AND SECTION 602 OF THE STANDARD SPECIFICATIONS.

HEAT CURVING STEEL GIRDERS: HEAT CURVING WILL BE PERMITTED FOR GIRDERS WITH RADIUS OF CURVATURE IN EXCESS OF THE MINIMUM REQUIREMENTS SPECIFIED IN AASHTO LRFD BRIDGE DESIGN SPECIFICATIONS ART. 6.7.7.2, PROVIDED THE PROCEDURE IS IN ACCORDANCE WITH AASHTO LRFD BRIDGE CONSTRUCTION SPECIFICATIONS ART. 11.4.12, AND THE VERTICAL CAMBER IS ADJUSTED IN ACCORDANCE WITH AASHTO LRFD BRIDGE DESIGN SPECIFICATIONS ART. 6.7.7.3.

ADDITIONAL SHOP SPLICE NOTE: SHOP SPLICES NECESSARY DUE TO LENGTHS OR SIZE OF MATERIAL INVOLVED MAY BE ADDED BY THE FABRICATOR SUBJECT TO APPROVAL BY THE ENGINEER AND SHALL BE AT NO ADDITIONAL COST TO THE PROJECT.

ADDITIONAL FIELD SPLICE NOTE: FIELD SPLICES NECESSARY DUE TO LENGTHS INVOLVED MAY BE ADDED BY THE FABRICATOR SUBJECT TO APPROVAL BY THE ENGINEER AND SHALL BE AT NO ADDITIONAL COST TO THE PROJECT.

FIELD SPLICE NOTE: FIELD SPLICES SHOWN ON THE PLANS MAY BE DELETED BY THE CONTRACTOR. ADJUSTMENT TO THE LUMP SUM PRICE FOR STEEL STRUCTURES SHALL BE IN ACCORDANCE WITH THE SPECIFICATIONS.

SHOP ASSEMBLY: PROGRESSIVE SHOP ASSEMBLY WILL BE ALLOWED. SEE AASHTO LRFD BRIDGE CONSTRUCTION SPECIFICATIONS ART. 11.5.3.1.

GIRDER TRANSVERSE BRACING: TRANSVERSE BRACING SHALL BE FABRICATED TO FIT THE "NO-LOAD" POSITION.

CURVED GIRDER ERECTION: GIRDERS MAY HAVE TO BE CRANE LIFTED, JACKED, NEEDLE BEAMED, ETC. TO ACHIEVE THE PROPER CROSS-SLOPE AND HOLE ALIGNMENT DURING TRANSVERSE BRACING INSTALLATION. THE CONTRACTOR WILL NOT BE ALLOWED TO REAM HOLES UNTIL 50% OF THE HOLES IN THE PATTERN AT THAT LOCATION ARE FILLED WITH BOLTS OF PLANS SPECIFIED SIZE. ALL TRANSVERSE BRACING SHALL BE IN PLACE AND ALL BOLTS TORQUED TO THE PLANS SPECIFIED VALUES PRIOR TO THE SLAB POUR. ALL COSTS OF TRANSVERSE BRACING COMPLETE IN PLACE TO BE INCLUDED IN THE LUMP SUM COST OF STEEL STRUCTURES.

CONTRACTOR CURVED GIRDER ERECTION PLAN: THE CONSTRACTOR SHALL SUBMIT A DETAILED ERECTION PLAN FOR THE GIRDERS TO THE ENGINEER OF STRUCTURES FOR REVIEW. SUBMITTAL SHALL BE AT LEAST 90 DAYS PRIOR TO START OF GIRDER ERECTION. THE CONSTRACTOR WILL BE OBLIGATED TO SUPPLY ALL ENGINEERING ANALYSIS REQUESTED BY THE ENGINEER OF STRUCTURES DEEMED NECESSARY TO CONFIRM THE ERECTION PLAN TO BE STRUCTURALLY ADEQUATE AND IN CONFORMANCE WITH AASHTO SPECIFICATIONS. THE ERECTION PLAN SHALL ADDRESS SHIPPING, HANDLING, AND ERECTION METHODS TO BE APPLIED. SHIPMENT OF THE GIRDERS SHALL NOT BE EXECUTED PRIOR TO RECEIVING THE ENGINEER OF STRUCTURES' APPROVAL OF ERECTION PLAN AND SUPPORTING ANALYSIS. SEE SECTION 602 OF THE STANDARD SPECIFICATIONS.

IN THE EVENT THE ERECTION PLAN EMPLOYS TEMPORARY SHORING, THIS SHORING SHALL SUPPORT THE GIRDERS SUCH THAT THE GIRDER PROFILE DEFINED BY THE BLOCKING DIAGRAM IN THE "NO-LOAD" POSITION ON THE SHOP DRAWINGS IS ESTABLISHED AND SUSTAINED. SEE ALSO ARTICLES 602.42 AND 604.06 OF THE STANDARD SPECIFICATION.

WHEN CONTRACTOR'S PROPOSED PLACEMENT OF SHORING CONFLICTS WITH THE TRAFFIC CONTROL PLAN ESTABLISHED BY TDOT PLANS THE CONTRACTOR SHALL DEVELOP AND SUBMIT A REVISED TRAFFIC CONTROL PLAN TO THE ENGINEER OF STRUCTURES FOR APPROVAL. THE TRAFFIC CONTROL PLAN SHALL INCLUDE DOCUMENTS AND DRAWINGS AS APPROPRIATE TO PROVIDE A COMPREHENSIVE DESCRIPTION OF DEVIATIONS FROM TDOT TRAFFIC PLANS. INFORMATION INCLUDED IN THE CONTRACTOR'S TRAFFIC CONTROL PLAN SHALL INCLUDE BUT IS NOT LIMITED TO IDENTIFYING THE LOCATION OF ALL TEMPORARY SHORING, THE CHARACTER AND LOCATION OF BARRIERS ISOLATING SHORING FROM TRAFFIC, DETAILS FOR REALIGNMENT OF TRAFFIC LANES, AND CHANGES TO SIGN TYPE OR PLACEMENT. THE COST OF TEMPORARY SHORING AND ANY COST INCURRED AS A CONSEQUENCE OF MODIFICATIONS TO THE TRAFFIC CONTROL PLAN REQUESTED BY THE CONTRACTOR TO ACCOMMODATE HIS ERECTION PLAN SHALL BE INCLUDED IN ITEM 602M04.01.

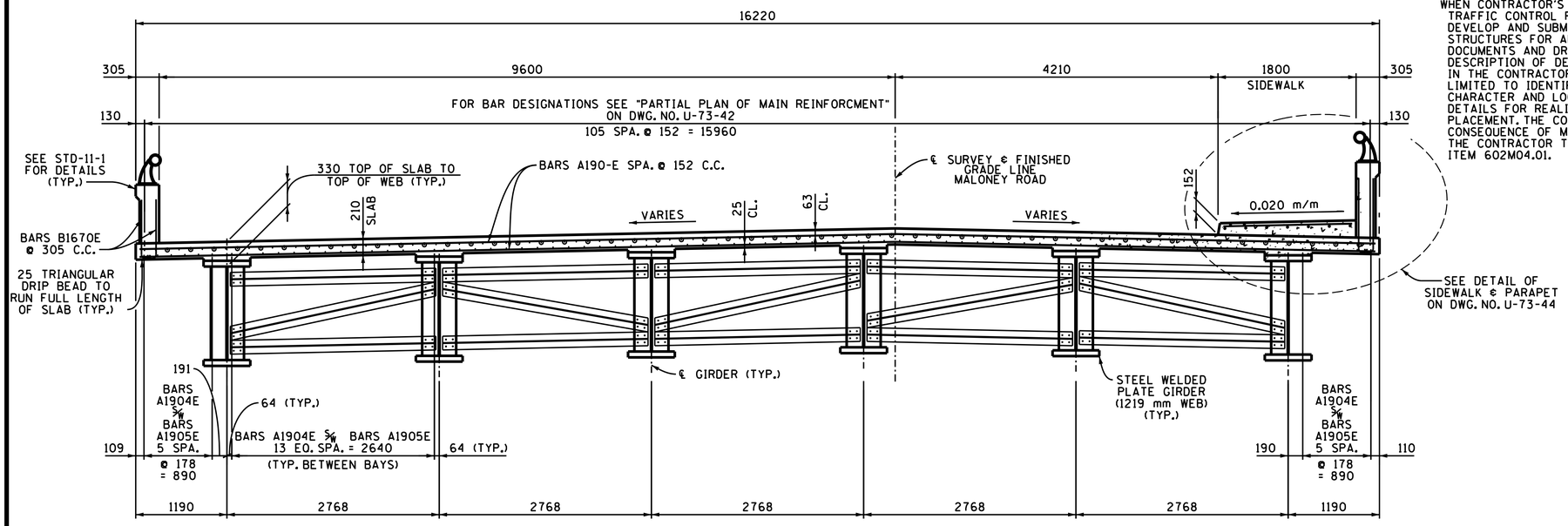


## TYPICAL CROSS-SECTION

LOOKING FORWARD ON SURVEY

NOTE ALL HORIZONTAL DIMENSIONS ARE FOR CONCENTRIC ARCS RADIAL TO ℄ SURVEY MALONEY ROAD.

• DENOTES: CUT-OFF BAR SEE "PARTIAL PLAN OF MAIN REINFORCEMENT" ON DWG. NO. U-73-42 FOR BAR DESIGNATION AND LENGTHS.

NOTE: CROSS-FRAME DIAGONAL ORIENTATION SHALL BE AS SHOWN.

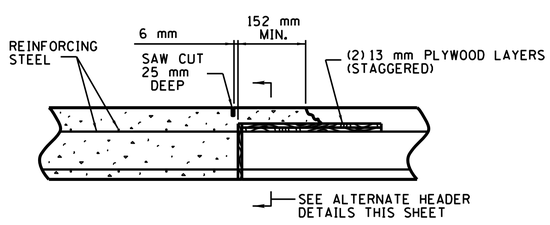


## SLAB CONSTRUCTION JOINT DETAIL

ALL SLAB CONSTRUCTION JOINTS SHALL BE IN ACCORDANCE WITH THE SLAB CONSTRUCTION JOINT DETAIL SHOWN ABOVE.

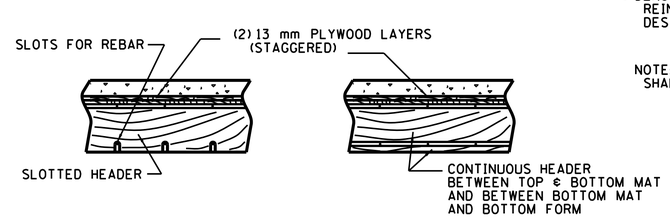


## ALTERNATE HEADER DETAILS

| ESTIMATED QUANTITIES | |
|---|---|
| CLASS "D" CONCRETE (BRIDGE DECK) M3 | EPOXY COATED REINFORCING STEEL KG. |
| 337 | 72988 |

NOTE: ALL DIMENSIONS SHOWN IN MILLIMETERS, WITH THE EXCEPTION OF STATIONS AND ELEVATIONS, UNLESS OTHERWISE NOTED.

DIVISION OF STRUCTURES METRIC

STATE OF TENNESSEE
DEPARTMENT OF TRANSPORTATION

BRIDGE NO. 1
SUPERSTRUCTURE
MALONEY ROAD
OVER
STATE ROUTE 115
STATION 1+269.563
KNOX COUNTY
2015

CARRIE M. DIETERS — STATE OF TENNESSEE — REGISTERED PROFESSIONAL ENGINEER — AGRICULTURE — No. 112724

CORRECT _____ ENGINEER OF STRUCTURES

| | | | |
|---|---|---|---|
| DESIGNED BY | ADAM PRICE | DATE | 12-14 |
| DRAWN BY | RODNEY CHANDLER | DATE | 06-15 |
| SUPERVISED BY | CMD/JWF | DATE | 06-15 |
| CHECKED BY | ADAM PRICE | DATE | 09-15 |

U-73-41

SP1133F.DGN

| CONST. NO. 47026-3279-14 | | |
|---|---|---|
| PROJECT NO. | YEAR | SHEET NO. |
| NH-115(54) | 2015 | |

REVISIONS

| NO. | DATE | BY | BRIEF DESCRIPTION |
|---|---|---|---|
| | | | |

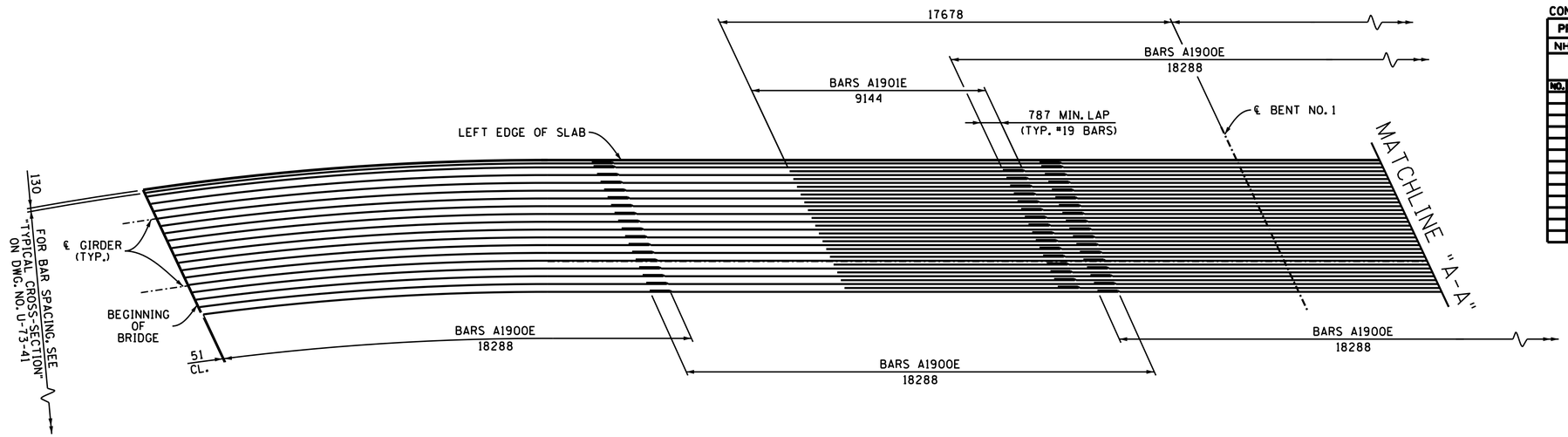


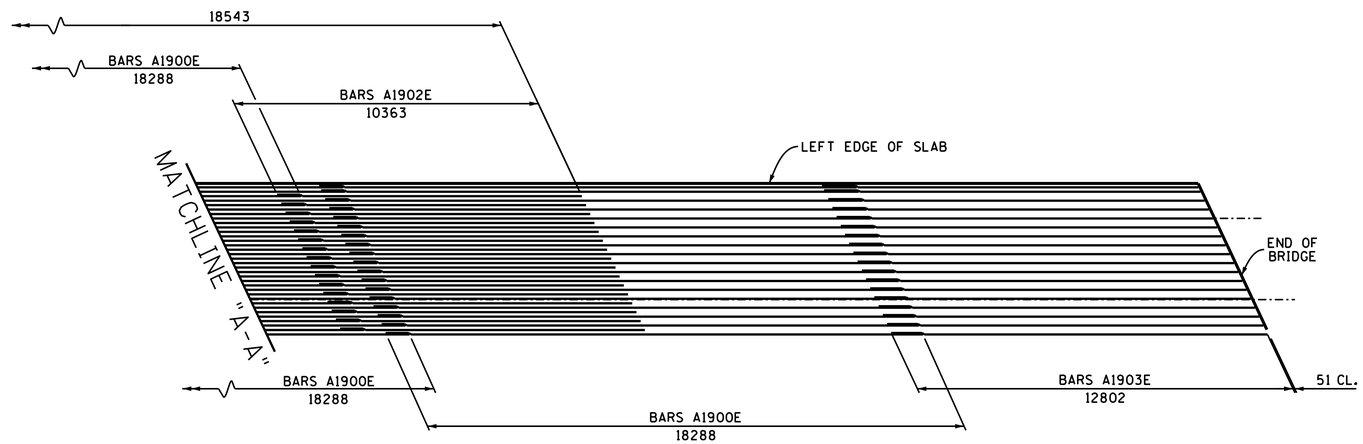


PARTIAL PLAN OF MAIN REINFORCEMENT

DESIGNED BY ADAM PRICE DATE 12-14
DRAWN BY RODNEY CHANDLER DATE 06-15
SUPERVISED BY CMD/JWF DATE 06-15
CHECKED BY ADAM PRICE DATE 09-15

DIVISION OF STRUCTURES METRIC

NOTE: ALL DIMENSIONS SHOWN IN MILLIMETERS, WITH THE EXCEPTION OF STATIONS AND ELEVATIONS, UNLESS OTHERWISE NOTED.

STATE OF TENNESSEE
DEPARTMENT OF TRANSPORTATION

BRIDGE NO. 1
SUPERSTRUCTURE DETAILS
MALONEY ROAD
OVER
STATE ROUTE 115
STATION 1+269.563
KNOX COUNTY
2015

CORRECT Wayne J. Tapp
ENGINEER OF STRUCTURES

U-73-42

SP1133F.DGN

CONST. NO. 47026-3279-14

| PROJECT NO. | YEAR | SHEET NO. |
|---|---|---|
| NH-115(54) | 2015 | |

REVISIONS

| NO. | DATE | BY | BRIEF DESCRIPTION |
|---|---|---|---|
| | | | |

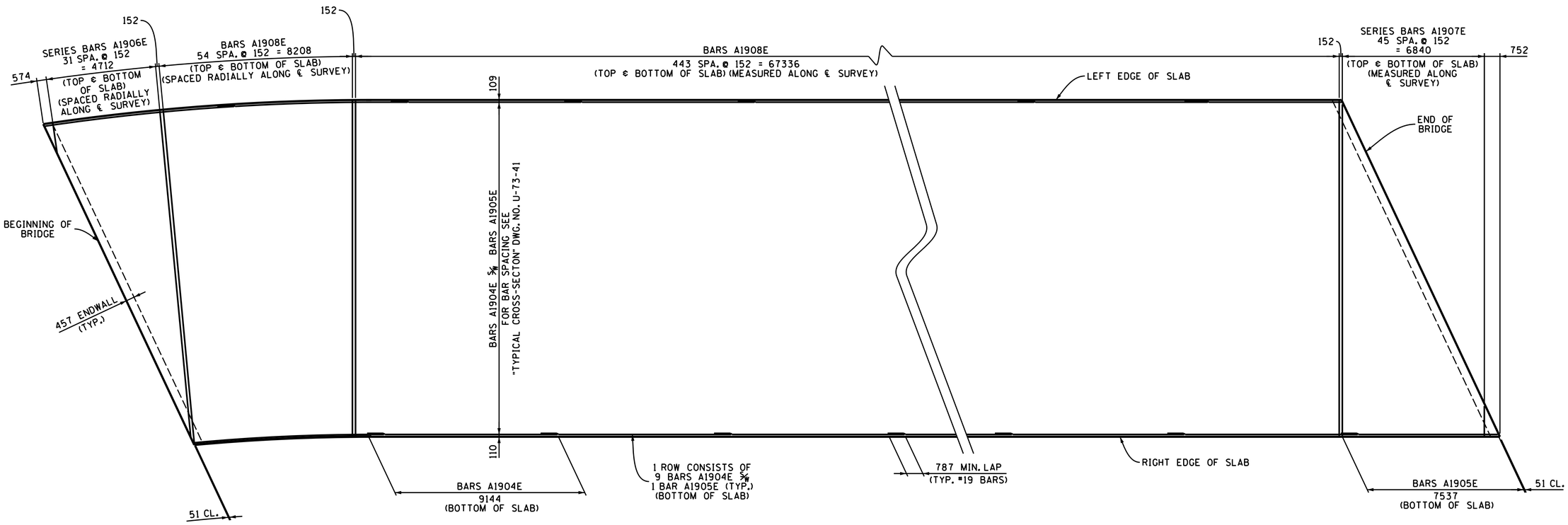


SLAB PLAN

STATE OF TENNESSEE
DEPARTMENT OF TRANSPORTATION

BRIDGE NO. 1
SUPERSTRUCTURE DETAILS
MALONEY ROAD
OVER
STATE ROUTE 115
STATION 1+269.563
KNOX COUNTY
2015

DIVISION OF STRUCTURES
METRIC

NOTE: ALL DIMENSIONS SHOWN IN MILLIMETERS, WITH THE EXCEPTION OF STATIONS AND ELEVATIONS, UNLESS OTHERWISE NOTED.

CARRINA M. DIETERS
STATE OF TENNESSEE
No. 115

CORRECT Wayne J. Sager
ENGINEER OF STRUCTURES

DESIGNED BY ADAM PRICE DATE 12-14
DRAWN BY RODNEY CHANDLER DATE 06-15
SUPERVISED BY CMD/JWF DATE 06-15
CHECKED BY ADAM PRICE DATE 09-15

U-73-43

SP1133F.DGN

| CONST. NO. 47026-3279-14 | | |
|---|---|---|
| PROJECT NO. | YEAR | SHEET NO. |
| NH-115(54) | 2015 | |

REVISIONS

| NO. | DATE | BY | BRIEF DESCRIPTION |
|---|---|---|---|
| | | | |

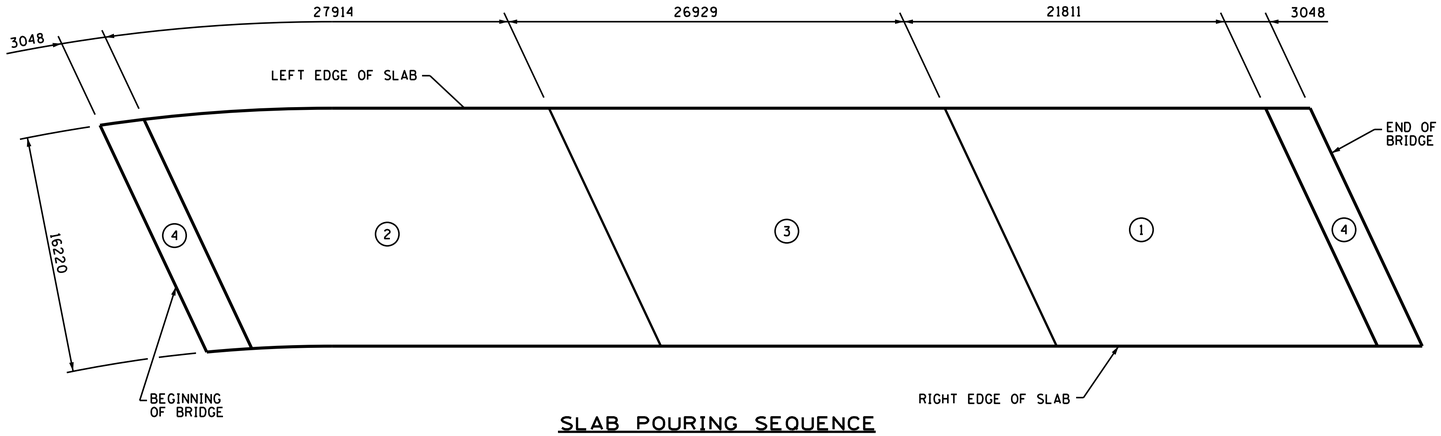


SLAB POURING SEQUENCE

NOTE: SEE DWG. NO. U-73-41 FOR SLAB CONSTRUCTION JOINT DETAILS.
NOTE: ALL SLAB POURS SHALL BE MADE IN NUMERICAL SEQUENCE.

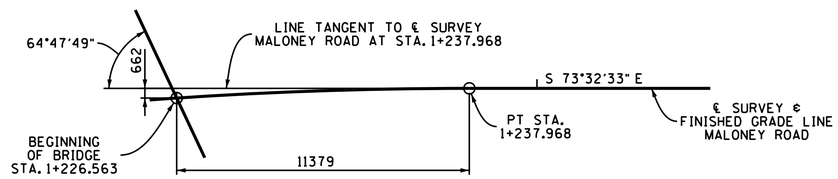


STAKE-OUT PLAN

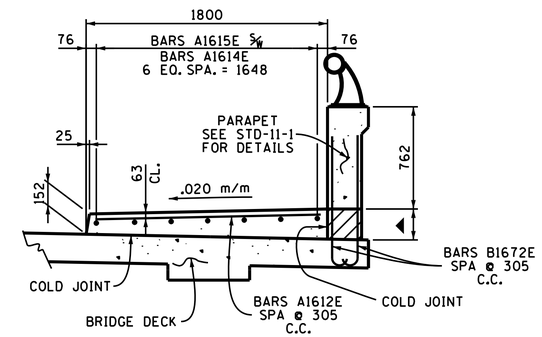


DETAIL OF SIDEWALK & PARAPET

▲ DENOTES: VARIES FROM 247 TO 230

NOTE: THE ADDITIONAL CONCRETE IN THE HATCHED AREA ABOVE SHALL BE INCLUDED IN THE COST OF THE STD-11-1 PARAPET.

(SPACED RADIALLY ALONG INSIDE FACE OF PARAPET)

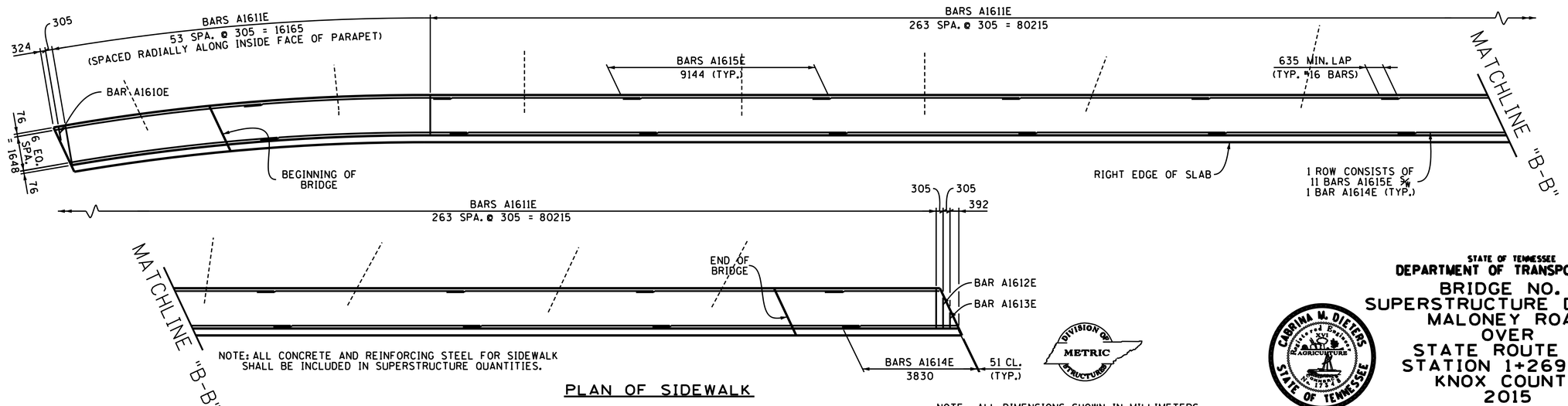


NOTE: ALL CONCRETE AND REINFORCING STEEL FOR SIDEWALK SHALL BE INCLUDED IN SUPERSTRUCTURE QUANTITIES.

PLAN OF SIDEWALK

NOTE: ALL DIMENSIONS SHOWN IN MILLIMETERS, WITH THE EXCEPTION OF STATIONS AND ELEVATIONS, UNLESS OTHERWISE NOTED.

STATE OF TENNESSEE
DEPARTMENT OF TRANSPORTATION

BRIDGE NO. 1
SUPERSTRUCTURE DETAILS
MALONEY ROAD
OVER
STATE ROUTE 115
STATION 1+269.563
KNOX COUNTY
2015

CORRECT Wayne J. Sager
ENGINEER OF STRUCTURES

| | | | |
|---|---|---|---|
| DESIGNED BY | ADAM PRICE | DATE | 12-14 |
| DRAWN BY | RODNEY CHANDLER | DATE | 06-15 |
| SUPERVISED BY | CMD/JWF | DATE | 06-15 |
| CHECKED BY | ADAM PRICE | DATE | 09-15 |

U-73-44

SP1133F.DGN

| CONST. NO. 47026-3279-14 | | |
|---|---|---|
| PROJECT NO. | YEAR | SHEET NO. |
| NH-115(54) | 2015 | |

REVISIONS

| NO. | DATE | BY | BRIEF DESCRIPTION |
|---|---|---|---|
| | | | |

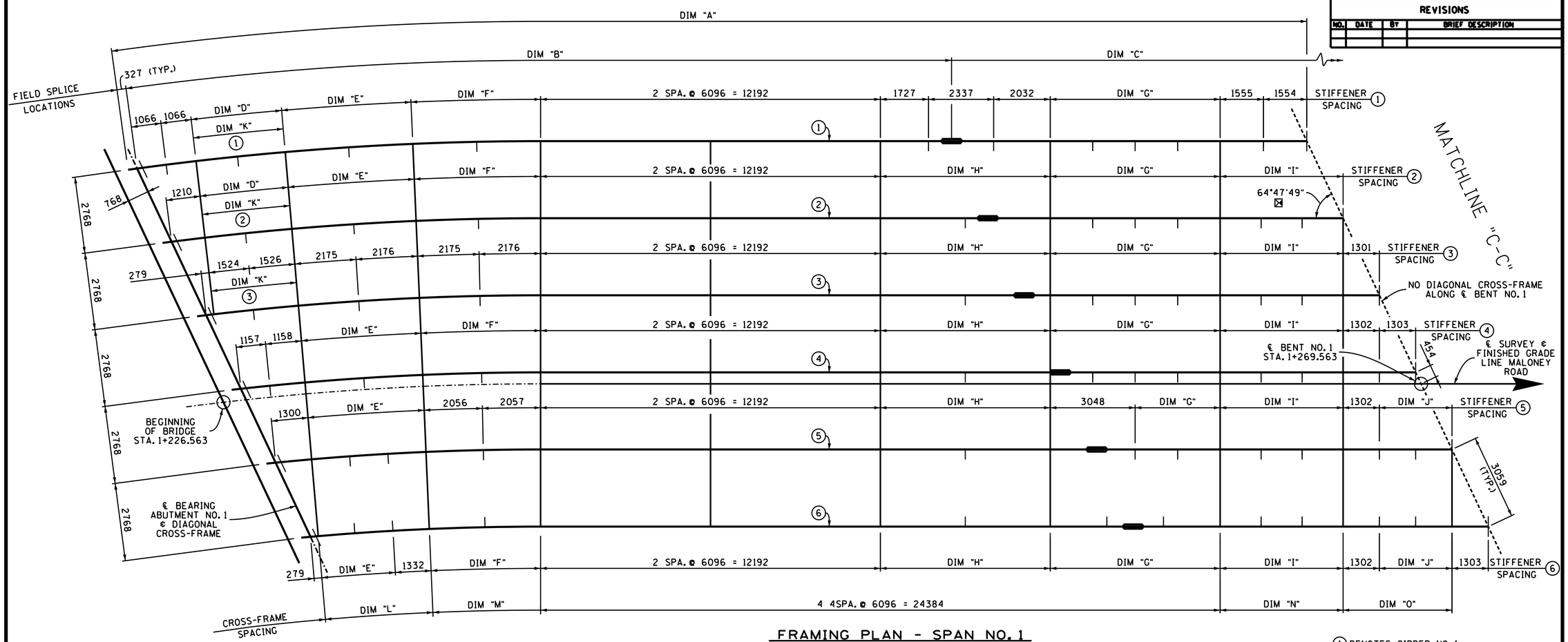


## FRAMING PLAN - SPAN NO. 1

NOTE: ALL CROSS-FRAMES ARE PERPENDICULAR OR RADIAL TO ℄ SURVEY MALONEY ROAD.

(1) DENOTES: GIRDER NO. 1
(2) DENOTES: GIRDER NO. 2
(3) DENOTES: GIRDER NO. 3
(4) DENOTES: GIRDER NO. 4
(5) DENOTES: GIRDER NO. 5
(6) DENOTES: GIRDER NO. 6

| | DIM. "A" |
|---|---|
| GIRDER 1 | 42344 |
| GIRDER 2 | 42404 |
| GIRDER 3 | 42456 |
| GIRDER 4 | 42508 |
| GIRDER 5 | 42558 |
| GIRDER 6 | 42602 |

STIFFENER SPACING

| | DIM. "D" | DIM. "E" | DIM. "F" | DIM. "G" | DIM. "H" | DIM. "I" | DIM. "J" |
|---|---|---|---|---|---|---|---|
| GIRDER 1 | 2 EQ. SPA. = 3212 | 2 EQ. SPA. = 4590 | 2 EQ. SPA. = 4590 | 4 EQ. SPA. = 6096 | - | - | - |
| GIRDER 2 | 2 EQ. SPA. = 3130 | 2 EQ. SPA. = 4470 | 2 EQ. SPA. = 4470 | 4 EQ. SPA. = 6096 | 2 EQ. SPA. = 6096 | 3 EQ. SPA. = 4413 | - |
| GIRDER 3 | - | - | - | 4 EQ. SPA. = 6096 | 2 EQ. SPA. = 6096 | 3 EQ. SPA. = 4413 | - |
| GIRDER 4 | - | 2 EQ. SPA. = 4232 | 2 EQ. SPA. = 4232 | 4 EQ. SPA. = 6096 | 2 EQ. SPA. = 6096 | 3 EQ. SPA. = 4413 | - |
| GIRDER 5 | - | 3 EQ. SPA. = 4113 | - | 2 EQ. SPA. = 3048 | 2 EQ. SPA. = 6096 | 3 EQ. SPA. = 4413 | 2 EQ. SPA. = 2606 |
| GIRDER 6 | - | 2 EQ. SPA. = 2662 | 2 EQ. SPA. = 3994 | 3 EQ. SPA. = 6096 | 2 EQ. SPA. = 6096 | 3 EQ. SPA. = 4413 | 2 EQ. SPA. = 2606 |

FIELD SPLICE LOCATIONS

| | DIM. "B" | DIM. "C" |
|---|---|---|
| GIRDER 1 | 29273 | 12744 |
| GIRDER 2 | 29333 | 12744 |
| GIRDER 3 | 29385 | 12744 |
| GIRDER 4 | 30047 | 12134 |
| GIRDER 5 | 29487 | 12744 |
| GIRDER 6 | 29531 | 12744 |

CROSS-FRAME SPACING

| | DIM. "K" | DIM. "L" | DIM. "M" | DIM. "N" | DIM. "O" |
|---|---|---|---|---|---|
| GIRDER 1 | 3212 | 4590 | 4590 | - | - |
| GIRDER 2 | 3130 | 4470 | 4470 | 4413 | - |
| GIRDER 3 | 3050 | 4351 | 4351 | 4413 | - |
| GIRDER 4 | - | 4232 | 4232 | 4413 | - |
| GIRDER 5 | - | 4113 | 4113 | 4413 | 3908 |
| GIRDER 6 | - | 3994 | 3994 | 4413 | 3908 |

⊠ DENOTES: TYPICAL EXCEPT AT BEGINNING OF BRIDGE WHERE GIRDERS ARE CURVED. ALL SUBSTRUCTURES ARE PARALLEL.

DIVISION OF STRUCTURES METRIC

NOTE: ALL DIMENSIONS SHOWN IN MILLIMETERS, WITH THE EXCEPTION OF STATIONS AND ELEVATIONS, UNLESS OTHERWISE NOTED.

STATE OF TENNESSEE
DEPARTMENT OF TRANSPORTATION

# BRIDGE NO. 1 SUPERSTRUCTURE DETAILS MALONEY ROAD OVER STATE ROUTE 115 STATION 1+269.563 KNOX COUNTY 2015

CARMINA M. DIETERS — Registered Engineer — Agriculture — STATE OF TENNESSEE

CORRECT Wayne J. Sager
ENGINEER OF STRUCTURES

DESIGNED BY ADAM PRICE DATE 12-14
DRAWN BY RODNEY CHANDLER DATE 06-15
SUPERVISED BY CMD/JWF DATE 06-15
CHECKED BY ADAM PRICE DATE 09-15

U-73-45

SP1133F.DGN

| CONST. NO. 47026-3279-14 | | |
|---|---|---|
| PROJECT NO. | YEAR | SHEET NO. |
| NH-115(54) | 2015 | |

REVISIONS

| NO. | DATE | BY | BRIEF DESCRIPTION |
|---|---|---|---|
| | | | |

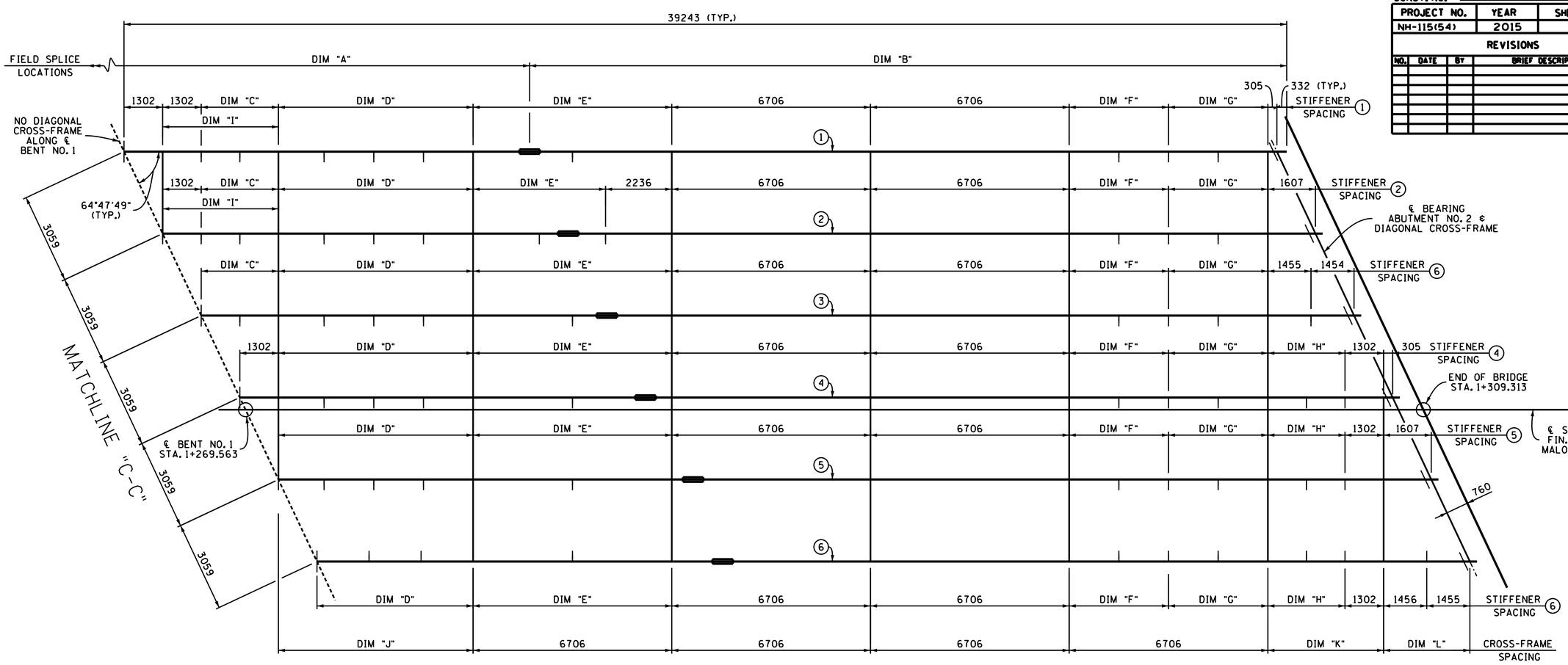


## FRAMING PLAN - SPAN NO. 1

NOTE: ALL CROSS-FRAMES ARE PERPENDICULAR OR RADIAL TO ℄ SURVEY MALONEY ROAD.

FIELD SPLICE LOCATIONS

| | DIM. "A" | DIM. "B" |
|---|---|---|
| GIRDER 1 | 13691 | 25552 |
| GIRDER 2 | 13691 | 25552 |
| GIRDER 3 | 13691 | 25552 |
| GIRDER 4 | 13691 | 25552 |
| GIRDER 5 | 13996 | 25247 |
| GIRDER 6 | 13691 | 25552 |

STIFFENER SPACING

| | DIM. "C" | DIM. "D" | DIM. "E" | DIM. "F" | DIM. "G" | DIM. "H" |
|---|---|---|---|---|---|---|
| GIRDER 1 | 2 EQ. SPA. = 2606 | 4 EQ. SPA. = 6572 | 2 EQ. SPA. = 6706 | 2 EQ. SPA. = 3354 | 2 EQ. SPA. = 3352 | - |
| GIRDER 2 | 2 EQ. SPA. = 2606 | 4 EQ. SPA. = 6572 | 2 EQ. SPA. = 4470 | 2 EQ. SPA. = 3354 | 2 EQ. SPA. = 3352 | - |
| GIRDER 3 | 2 EQ. SPA. = 2606 | 4 EQ. SPA. = 6572 | 2 EQ. SPA. = 6706 | 2 EQ. SPA. = 3354 | 2 EQ. SPA. = 3352 | - |
| GIRDER 4 | - | 4 EQ. SPA. = 6572 | 2 EQ. SPA. = 6706 | 2 EQ. SPA. = 3354 | 2 EQ. SPA. = 3352 | 2 EQ. SPA. = 2606 |
| GIRDER 5 | - | 4 EQ. SPA. = 6572 | 2 EQ. SPA. = 6706 | 2 EQ. SPA. = 3354 | 2 EQ. SPA. = 3352 | 2 EQ. SPA. = 2606 |
| GIRDER 6 | - | 3 EQ. SPA. = 5268 | 2 EQ. SPA. = 6706 | 2 EQ. SPA. = 3354 | 2 EQ. SPA. = 3352 | 2 EQ. SPA. = 2606 |

CROSS-FRAME SPACING

| | DIM. "I" | DIM. "J" | DIM. "K" | DIM. "L" |
|---|---|---|---|---|
| GIRDER 1 | 3908 | 6572 | - | - |
| GIRDER 2 | 3908 | 6572 | - | - |
| GIRDER 3 | - | 6572 | - | - |
| GIRDER 4 | - | 6572 | 3908 | - |
| GIRDER 5 | - | 6572 | 3908 | - |
| GIRDER 6 | - | - | 3908 | 2911 |

(1) DENOTES: GIRDER NO. 1
(2) DENOTES: GIRDER NO. 2
(3) DENOTES: GIRDER NO. 3
(4) DENOTES: GIRDER NO. 4
(5) DENOTES: GIRDER NO. 5
(6) DENOTES: GIRDER NO. 6

DIVISION OF STRUCTURES METRIC

NOTE: ALL DIMENSIONS SHOWN IN MILLIMETERS, WITH THE EXCEPTION OF STATIONS AND ELEVATIONS, UNLESS OTHERWISE NOTED.

STATE OF TENNESSEE
DEPARTMENT OF TRANSPORTATION

BRIDGE NO. 1
SUPERSTRUCTURE DETAILS
MALONEY ROAD
OVER
STATE ROUTE 115
STATION 1+269.563
KNOX COUNTY
2015

CABRINA M. DIETERS — STATE OF TENNESSEE — REGISTERED ENGINEER — AGRICULTURE — No. 115 73

CORRECT Wayne J. Tapp
ENGINEER OF STRUCTURES

DESIGNED BY ADAM PRICE DATE 12-14
DRAWN BY RODNEY CHANDLER DATE 06-15
SUPERVISED BY CMD/JWF DATE 06-15
CHECKED BY ADAM PRICE DATE 09-15

U-73-46

SP1133F.DGN

CONST. NO. 47026-3279-14

| PROJECT NO. | YEAR | SHEET NO. |
|---|---|---|
| NH-115(54) | 2015 | |

REVISIONS

| NO. | DATE | BY | BRIEF DESCRIPTION |
|---|---|---|---|
| | | | |

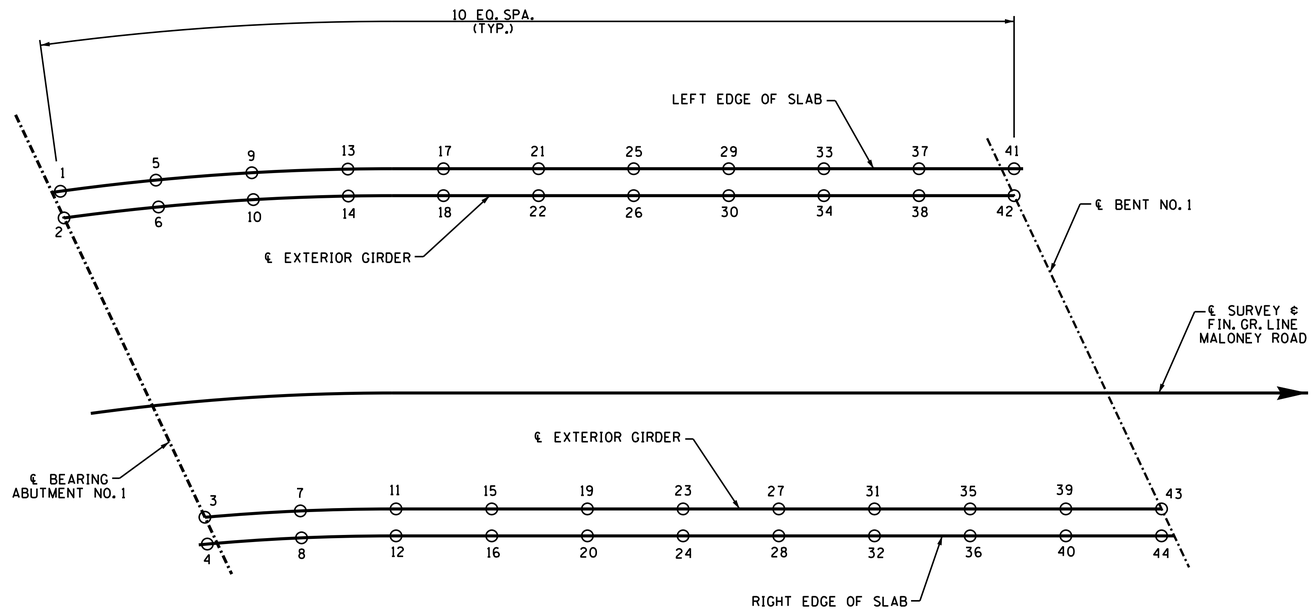


## BRIDGE SCREED

(SPAN NO. 1 ONLY)

## TABLE OF POINTS, STATIONS AND ELEVATIONS

| PT. | STATION | ELEVATION | PT. | STATION | ELEVATION |
|---|---|---|---|---|---|
| 1 | 1+224.627 | 266.072 | 23 | 1+250.837 | 266.238 |
| 2 | 1+224.627 | 266.030 | 24 | 1+250.837 | 266.214 |
| 3 | 1+229.245 | 265.728 | 25 | 1+248.654 | 266.206 |
| 4 | 1+229.245 | 265.696 | 26 | 1+248.654 | 266.217 |
| 5 | 1+228.487 | 266.116 | 27 | 1+255.065 | 266.300 |
| 6 | 1+228.487 | 266.083 | 28 | 1+255.065 | 266.276 |
| 7 | 1+233.705 | 265.882 | 29 | 1+252.855 | 266.194 |
| 8 | 1+233.705 | 265.858 | 30 | 1+252.855 | 266.215 |
| 9 | 1+232.346 | 266.152 | 31 | 1+259.292 | 266.350 |
| 10 | 1+232.346 | 266.127 | 32 | 1+259.292 | 266.326 |
| 11 | 1+238.155 | 265.991 | 33 | 1+257.057 | 266.229 |
| 12 | 1+238.155 | 265.967 | 34 | 1+257.057 | 266.253 |
| 13 | 1+236.205 | 266.179 | 35 | 1+263.520 | 266.390 |
| 14 | 1+236.205 | 266.163 | 36 | 1+263.520 | 266.367 |
| 15 | 1+242.382 | 266.084 | 37 | 1+261.259 | 266.275 |
| 16 | 1+242.382 | 266.060 | 38 | 1+261.259 | 266.298 |
| 17 | 1+240.250 | 266.198 | 39 | 1+267.748 | 266.420 |
| 18 | 1+240.250 | 266.191 | 40 | 1+267.748 | 266.396 |
| 19 | 1+246.610 | 266.166 | 41 | 1+265.461 | 266.310 |
| 20 | 1+246.610 | 266.143 | 42 | 1+265.461 | 266.333 |
| 21 | 1+244.452 | 266.207 | 43 | 1+271.975 | 266.439 |
| 22 | 1+244.452 | 266.209 | 44 | 1+271.975 | 266.415 |

DIVISION OF STRUCTURES
METRIC

NOTE: ALL DIMENSIONS SHOWN IN MILLIMETERS. WITH THE EXCEPTION OF STATIONS AND ELEVATIONS, UNLESS OTHERWISE NOTED.

STATE OF TENNESSEE
DEPARTMENT OF TRANSPORTATION

BRIDGE NO. 1
SUPERSTRUCTURE DETAILS
MALONEY ROAD
OVER
STATE ROUTE 115
STATION 1+269.563
KNOX COUNTY
2015

CABRINA W. DIETERS
STATE OF TENNESSEE

CORRECT Wayne G. Sieger
ENGINEER OF STRUCTURES

DESIGNED BY ADAM PRICE DATE 12-14
DRAWN BY RODNEY CHANDLER DATE 06-15
SUPERVISED BY CMD/JWF DATE 06-15
CHECKED BY ADAM PRICE DATE 09-15

U-73-47

BP1133F.DGN

CONST. NO. 47026-3279-14

| PROJECT NO. | YEAR | SHEET NO. |
|---|---|---|
| NH-115(54) | 2015 | |

REVISIONS

| NO. | DATE | BY | BRIEF DESCRIPTION |
|---|---|---|---|
| | | | |

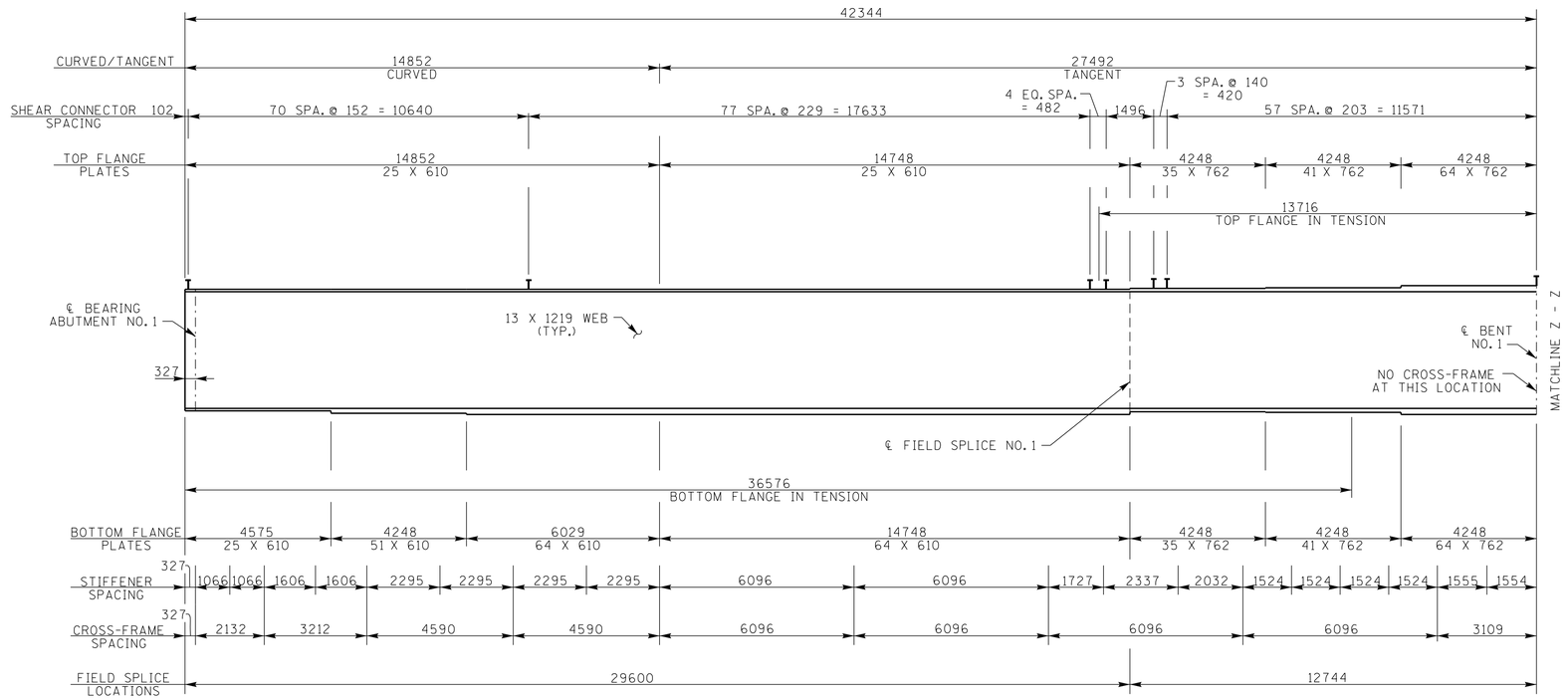


GIRDER NO. 1 ELEVATION

(SPAN NO. 1)

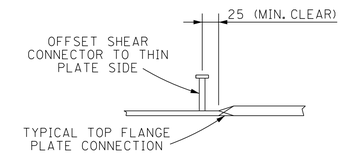


TYPICAL SHEAR CONNECTOR OFFSET

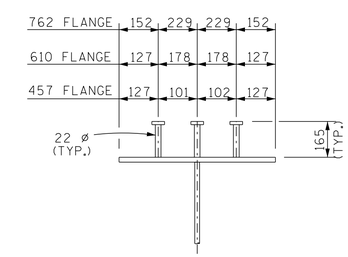


SHEAR CONNECTOR DETAIL

NOTE: SHEAR CONNECTOR MATERIAL TO BE COLD-DRAWN ASTM A108 GRADE 1015, 1018, OR 1020, EITHER SEMI OR FULLY KILLED AND HAVE SPECIFIED MINIMUM YIELD AND TENSILE STRENGTHS OF 345 MPa AND 414 MPa, RESPECTIVELY.

DIVISION OF STRUCTURES METRIC

NOTE: ALL DIMENSIONS SHOWN IN MILLIMETERS, WITH THE EXCEPTION OF STATIONS AND ELEVATIONS, UNLESS OTHERWISE NOTED.

| SPAN POINT | 1.0 | 1.1 | 1.2 | 1.3 | 1.4 | 1.5 | 1.6 | 1.7 | 1.8 | 1.9 | 2.0 |
|---|---|---|---|---|---|---|---|---|---|---|---|
| DEAD LOAD GIRDER | 0 | 11 | 19 | 25 | 29 | 27 | 22 | 17 | 10 | 5 | 0 |
| TOTAL DEAD LOAD | 0 | 41 | 73 | 95 | 103 | 100 | 83 | 59 | 33 | 13 | 0 |

DEAD LOAD CORRECTION CURVE

SPAN NO. 1 - ALL GIRDERS
DEAD LOAD CORRECTION CURVE: GIRDERS SHALL BE CAMBERED TO COMPENSATE FOR DEAD LOAD DEFLECTION AND VERTICAL CURVE.

STATE OF TENNESSEE
DEPARTMENT OF TRANSPORTATION

BRIDGE NO. 1
SUPERSTRUCTURE DETAILS
MALONEY ROAD
OVER
STATE ROUTE 115
STATION 1+269.563
KNOX COUNTY
2015

CARRINA M. DIETERS STATE OF TENNESSEE

CORRECT Dwayne J. Tayloe
ENGINEER OF STRUCTURES

DESIGNED BY ADAM PRICE DATE 1-15
DRAWN BY T. KIRK DATE 6-15
SUPERVISED BY FIELDS & DIETERS DATE 6-15
CHECKED BY ADAM PRICE DATE 8-15

U-73-48

BP1133F.DGN

CONST. NO. 47026-3279-14

| PROJECT NO. | YEAR | SHEET NO. |
|---|---|---|
| NH-115(54) | 2015 | |

REVISIONS

| NO. | DATE | BY | BRIEF DESCRIPTION |
|---|---|---|---|
| | | | |

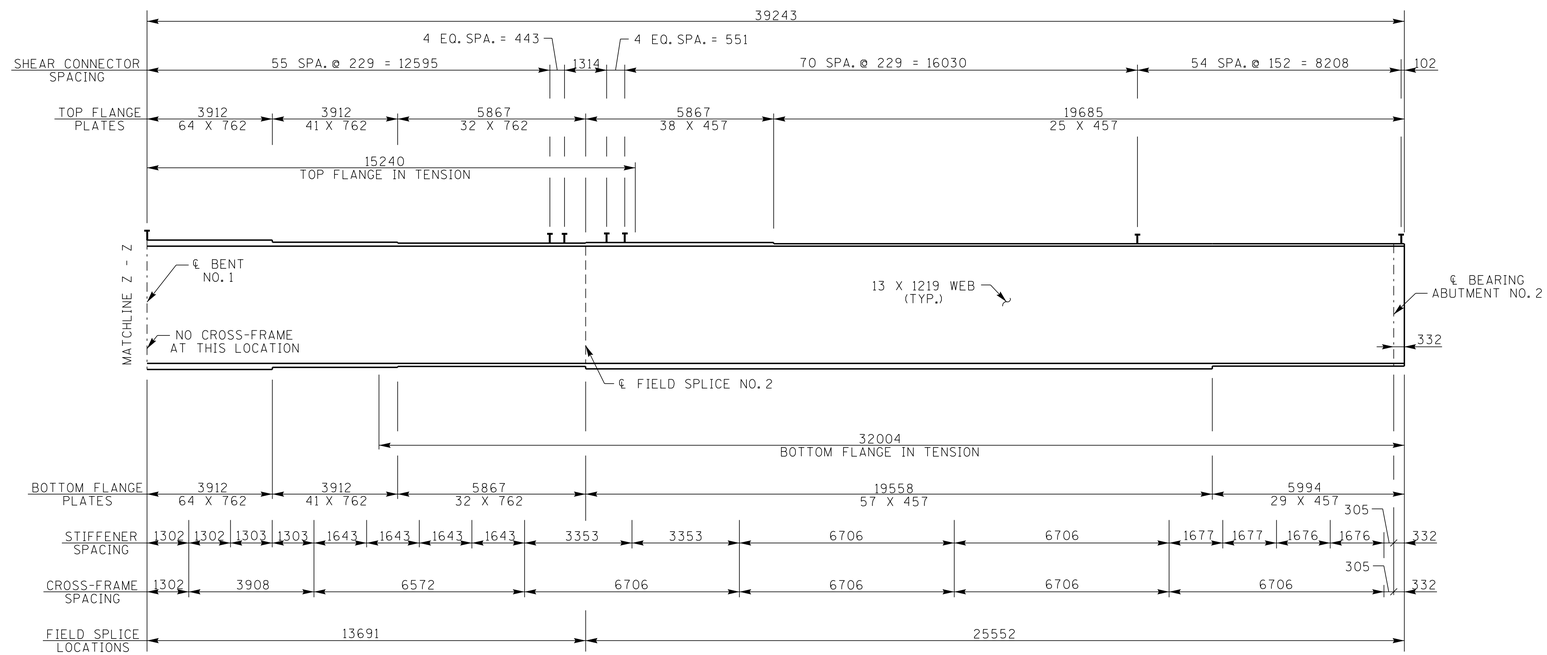


## GIRDER NO. 1 ELEVATION

(SPAN NO. 2)

| SPAN POINT | 2.0 | 2.1 | 2.2 | 2.3 | 2.4 | 2.5 | 2.6 | 2.7 | 2.8 | 2.9 | 3.0 |
|---|---|---|---|---|---|---|---|---|---|---|---|
| DEAD LOAD GIRDER | 0 | -2 | 2 | 5 | 8 | 11 | 13 | 13 | 11 | 6 | 0 |
| TOTAL DEAD LOAD | 0 | 2 | 11 | 27 | 44 | 59 | 67 | 64 | 51 | 29 | 0 |

## DEAD LOAD CORRECTION CURVE

SPAN NO. 2 - ALL GIRDERS
DEAD LOAD CORRECTION CURVE: GIRDERS SHALL BE CAMBERED
TO COMPENSATE FOR DEAD LOAD DEFLECTION AND VERTICAL CURVE.

DIVISION OF METRIC STRUCTURES

NOTE: ALL DIMENSIONS SHOWN IN MILLIMETERS, WITH THE EXCEPTION OF STATIONS AND ELEVATIONS, UNLESS OTHERWISE NOTED.

STATE OF TENNESSEE
DEPARTMENT OF TRANSPORTATION

BRIDGE NO. 1
SUPERSTRUCTURE DETAILS
MALONEY ROAD
OVER
STATE ROUTE 115
STATION 1+269.563
KNOX COUNTY
2015

CABRINA M. DIETERS — STATE OF TENNESSEE — AGRICULTURE

CORRECT Wayne G. Sieger
ENGINEER OF STRUCTURES

DESIGNED BY ADAM PRICE DATE 1-15
DRAWN BY T. KIRK DATE 6-15
SUPERVISED BY FIELDS & DIETERS DATE 6-15
CHECKED BY ADAM PRICE DATE 8-15

U-73-49

BP1133F.DGN

CONST. NO. 47026-3279-14

| PROJECT NO. | YEAR | SHEET NO. |
|---|---|---|
| NH-115(54) | 2015 | |

REVISIONS

| NO. | DATE | BY | BRIEF DESCRIPTION |
|---|---|---|---|
| | | | |

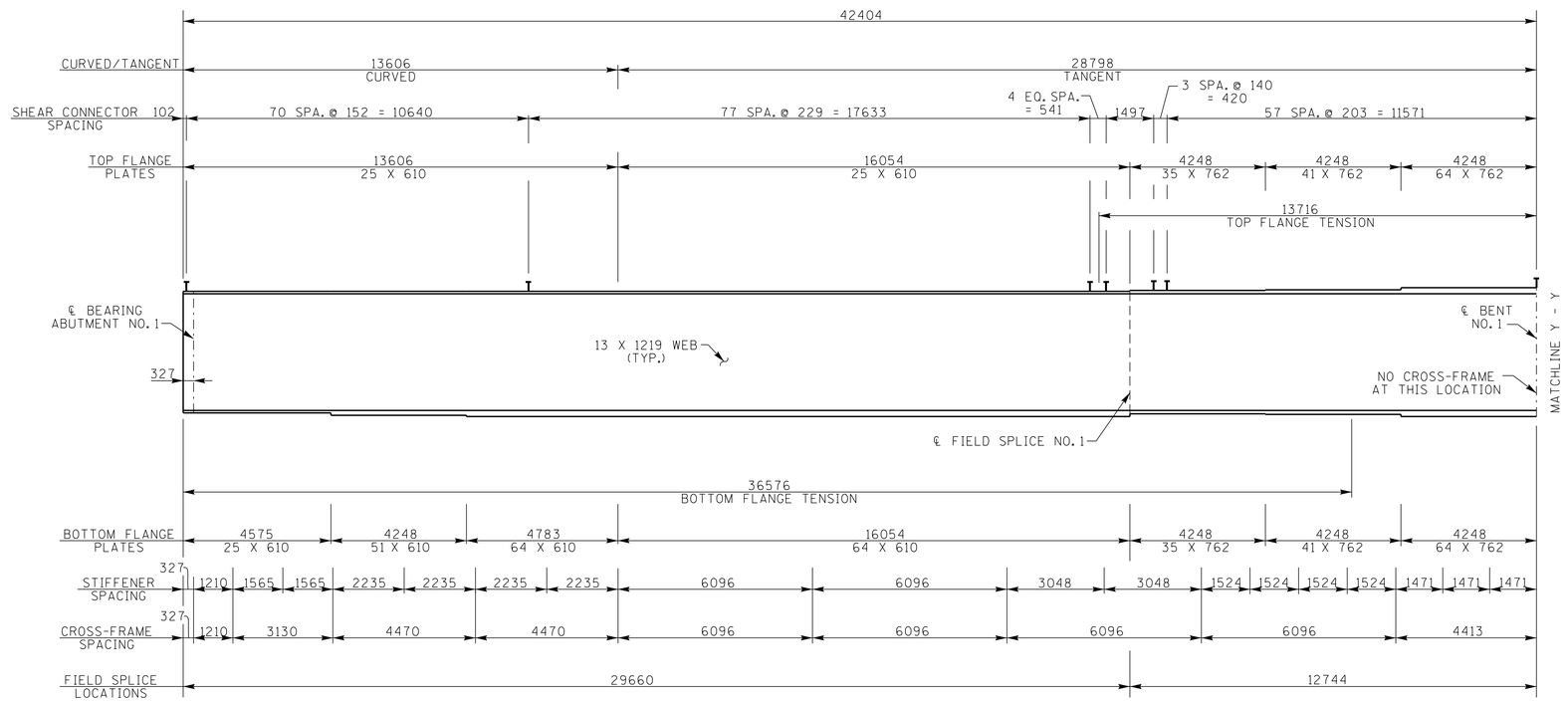


GIRDER NO. 2 ELEVATION

(SPAN NO. 1)

DIVISION OF STRUCTURES METRIC

NOTE: ALL DIMENSIONS SHOWN IN MILLIMETERS, WITH THE EXCEPTION OF STATIONS AND ELEVATIONS, UNLESS OTHERWISE NOTED.

STATE OF TENNESSEE
DEPARTMENT OF TRANSPORTATION

BRIDGE NO. 1
SUPERSTRUCTURE DETAILS
MALONEY ROAD
OVER
STATE ROUTE 115
STATION 1+269.563
KNOX COUNTY
2015

CABRINA M. DIETERS — STATE OF TENNESSEE — 31317 — AGRICULTURE

CORRECT Wayne G. Sieger
ENGINEER OF STRUCTURES

| | | | |
|---|---|---|---|
| DESIGNED BY | ADAM PRICE | DATE | 1-15 |
| DRAWN BY | T. KIRK | DATE | 6-15 |
| SUPERVISED BY | FIELDS & DIETERS | DATE | 6-15 |
| CHECKED BY | ADAM PRICE | DATE | 8-15 |

U-73-50

BP1133F.DGN

CONST. NO. 47026-3279-14

| PROJECT NO. | YEAR | SHEET NO. |
|---|---|---|
| NH-115(54) | 2015 | |

REVISIONS

| NO. | DATE | BY | BRIEF DESCRIPTION |
|---|---|---|---|
| | | | |

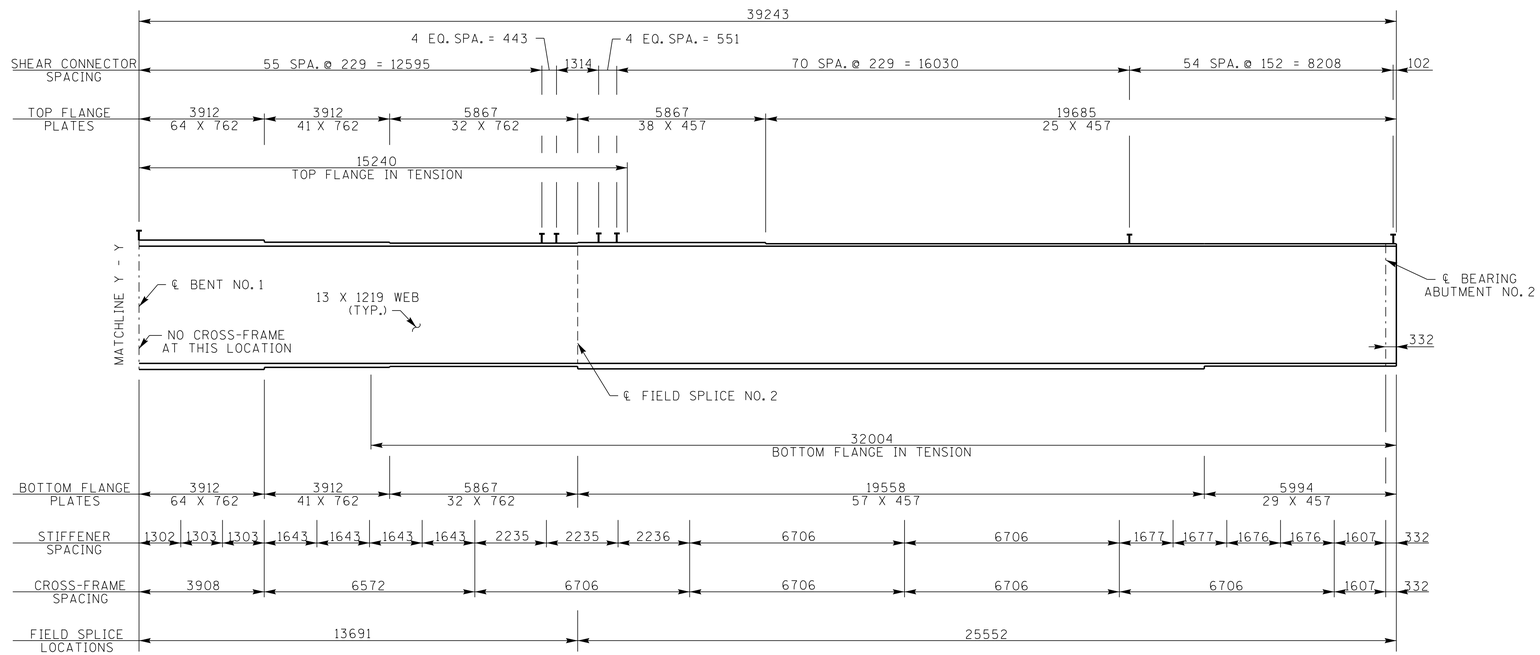


GIRDER NO. 2 ELEVATION

(SPAN NO. 2)

DIVISION OF METRIC STRUCTURES

NOTE: ALL DIMENSIONS SHOWN IN MILLIMETERS, WITH THE EXCEPTION OF STATIONS AND ELEVATIONS, UNLESS OTHERWISE NOTED.

STATE OF TENNESSEE
DEPARTMENT OF TRANSPORTATION

BRIDGE NO. 1
SUPERSTRUCTURE DETAILS
MALONEY ROAD
OVER
STATE ROUTE 115
STATION 1+269.563
KNOX COUNTY
2015

CABRINA M. DIETERS — STATE OF TENNESSEE — AGRICULTURE — 21179

CORRECT Wayne G. Sieger
ENGINEER OF STRUCTURES

| | | | |
|---|---|---|---|
| DESIGNED BY | ADAM PRICE | DATE | 1-15 |
| DRAWN BY | T. KIRK | DATE | 6-15 |
| SUPERVISED BY | FIELDS & DIETERS | DATE | 6-15 |
| CHECKED BY | ADAM PRICE | DATE | 8-15 |

U-73-51

BP1133F.DGN

CONST. NO. 47026-3279-14

| PROJECT NO. | YEAR | SHEET NO. |
|---|---|---|
| NH-115(54) | 2015 | |

REVISIONS

| NO. | DATE | BY | BRIEF DESCRIPTION |
|---|---|---|---|
| | | | |

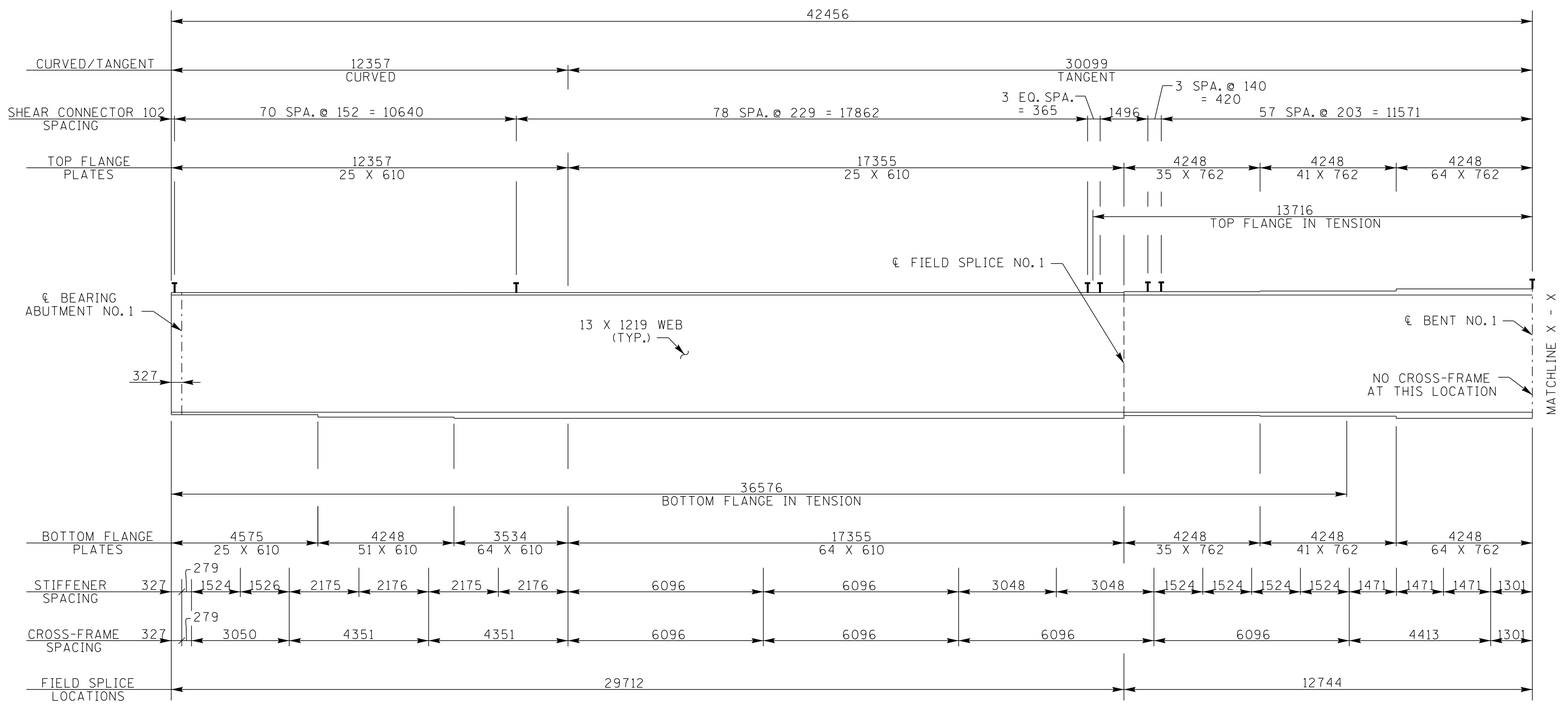


GIRDER NO. 3 ELEVATION

(SPAN NO. 1)

DIVISION OF STRUCTURES METRIC

NOTE: ALL DIMENSIONS SHOWN IN MILLIMETERS, WITH THE EXCEPTION OF STATIONS AND ELEVATIONS, UNLESS OTHERWISE NOTED.

STATE OF TENNESSEE
DEPARTMENT OF TRANSPORTATION

BRIDGE NO. 1
SUPERSTRUCTURE DETAILS
MALONEY ROAD
OVER
STATE ROUTE 115
STATION 1+269.563
KNOX COUNTY
2015

CABRINA M. DIETERS
STATE OF TENNESSEE

CORRECT Dwayne J. Tepper
ENGINEER OF STRUCTURES

DESIGNED BY ADAM PRICE DATE 1-15
DRAWN BY T. KIRK DATE 6-15
SUPERVISED BY FIELDS & DIETERS DATE 6-15
CHECKED BY ADAM PRICE DATE 8-15

U-73-52

BP1133F.DGN

CONST. NO. 47026-3279-14

| PROJECT NO. | YEAR | SHEET NO. |
|---|---|---|
| NH-115(54) | 2015 | |

REVISIONS

| NO. | DATE | BY | BRIEF DESCRIPTION |
|---|---|---|---|
| | | | |

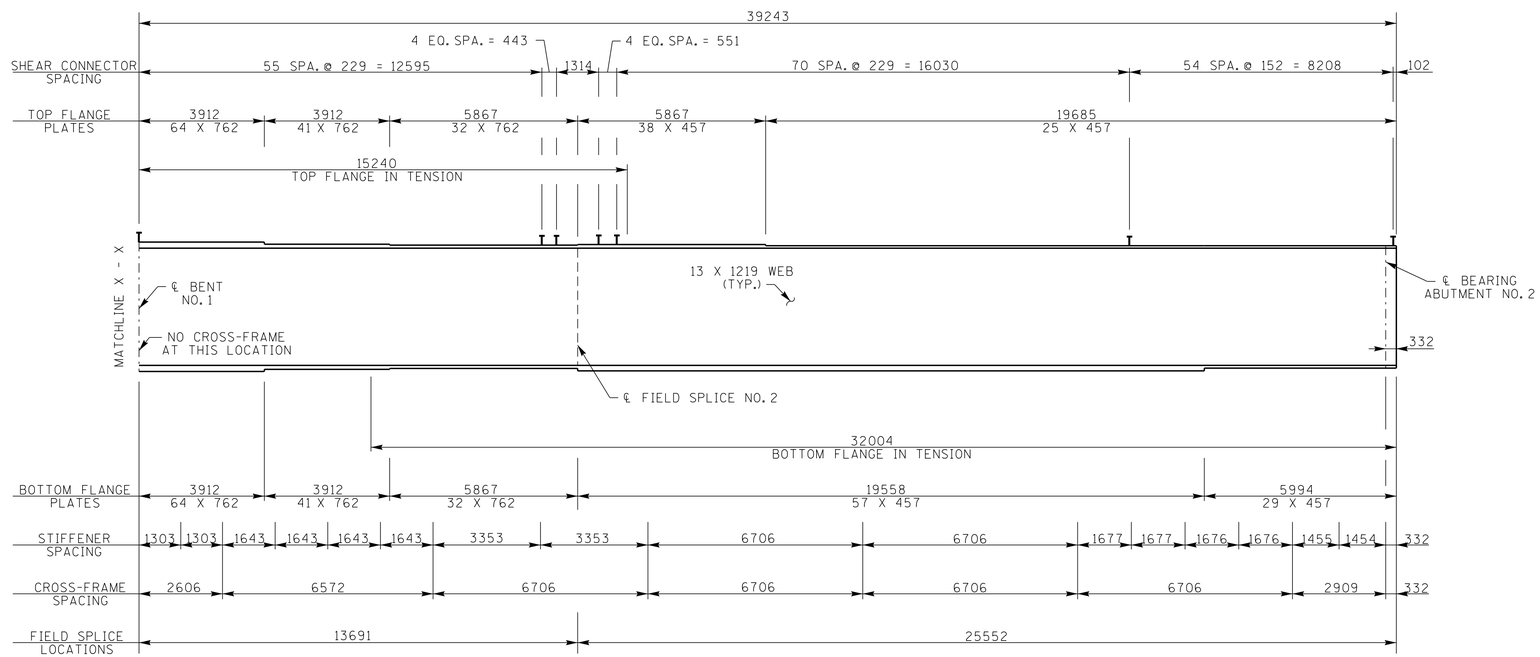


GIRDER NO. 3 ELEVATION

(SPAN NO. 2)

DIVISION OF METRIC STRUCTURES

NOTE: ALL DIMENSIONS SHOWN IN MILLIMETERS, WITH THE EXCEPTION OF STATIONS AND ELEVATIONS, UNLESS OTHERWISE NOTED.

STATE OF TENNESSEE
DEPARTMENT OF TRANSPORTATION

BRIDGE NO. 1
SUPERSTRUCTURE DETAILS
MALONEY ROAD
OVER
STATE ROUTE 115
STATION 1+269.563
KNOX COUNTY
2015

CABRINA M. DIETERS — STATE OF TENNESSEE — AGRICULTURE — 01/27/15

CORRECT Wayne G. Sieger
ENGINEER OF STRUCTURES

| | | | |
|---|---|---|---|
| DESIGNED BY | ADAM PRICE | DATE | 1-15 |
| DRAWN BY | T. KIRK | DATE | 6-15 |
| SUPERVISED BY | FIELDS & DIETERS | DATE | 6-15 |
| CHECKED BY | ADAM PRICE | DATE | 8-15 |

U-73-53

BP1133F.DGN

CONST. NO. 47026-3279-14

| PROJECT NO. | YEAR | SHEET NO. |
|---|---|---|
| NH-115(54) | 2015 | |

REVISIONS

| NO. | DATE | BY | BRIEF DESCRIPTION |
|---|---|---|---|
| | | | |

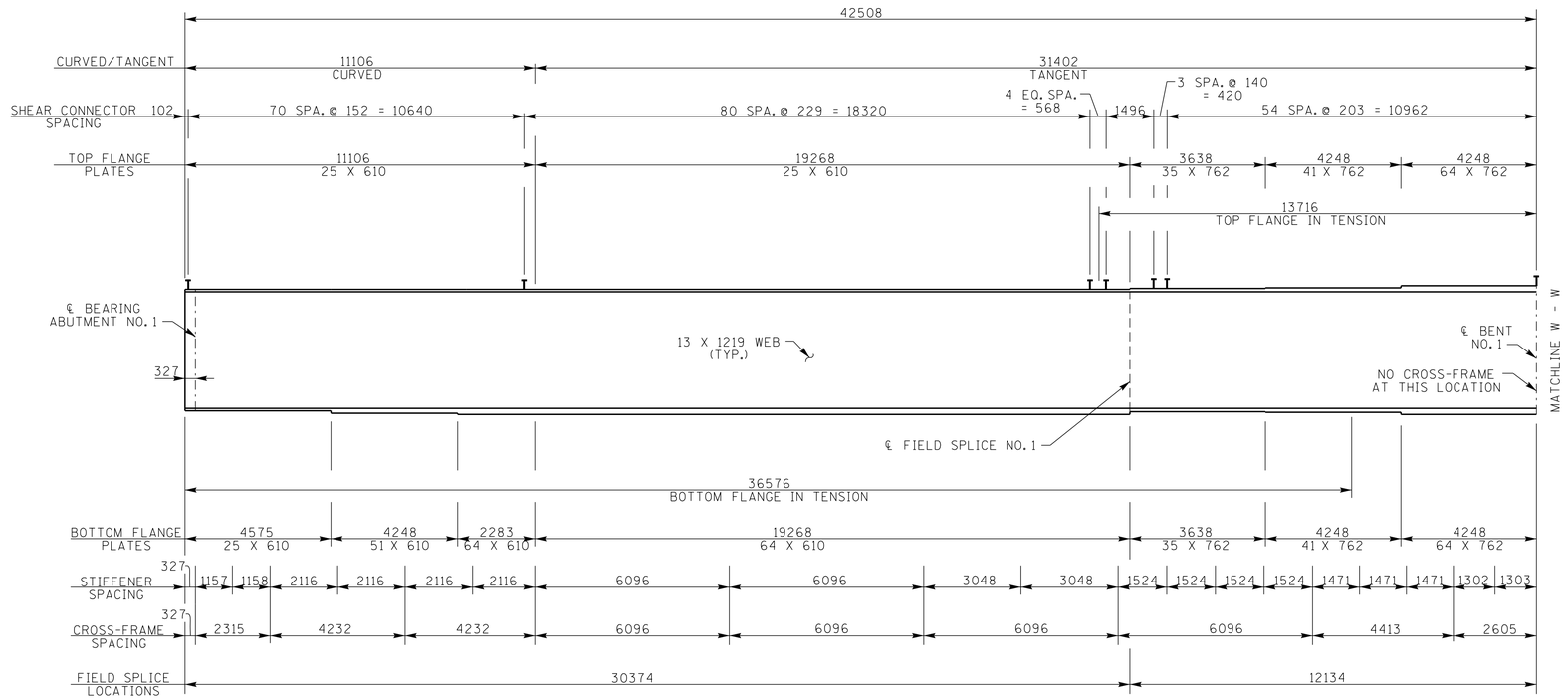


GIRDER NO. 4 ELEVATION

(SPAN NO. 1)

DIVISION OF STRUCTURES METRIC

NOTE: ALL DIMENSIONS SHOWN IN MILLIMETERS, WITH THE EXCEPTION OF STATIONS AND ELEVATIONS, UNLESS OTHERWISE NOTED.

STATE OF TENNESSEE
DEPARTMENT OF TRANSPORTATION

BRIDGE NO. 1
SUPERSTRUCTURE DETAILS
MALONEY ROAD
OVER
STATE ROUTE 115
STATION 1+269.563
KNOX COUNTY
2015

CABRINA M. DIETERS — STATE OF TENNESSEE — AGRICULTURE

CORRECT Wayne G. Sieger
ENGINEER OF STRUCTURES

| | | | |
|---|---|---|---|
| DESIGNED BY | ADAM PRICE | DATE | 1-15 |
| DRAWN BY | T. KIRK | DATE | 6-15 |
| SUPERVISED BY | FIELDS & DIETERS | DATE | 6-15 |
| CHECKED BY | ADAM PRICE | DATE | 8-15 |

U-73-54

BP1133F.DGN

CONST. NO. 47026-3279-14

| PROJECT NO. | YEAR | SHEET NO. |
|---|---|---|
| NH-115(54) | 2015 | |

REVISIONS

| NO. | DATE | BY | BRIEF DESCRIPTION |
|---|---|---|---|
| | | | |

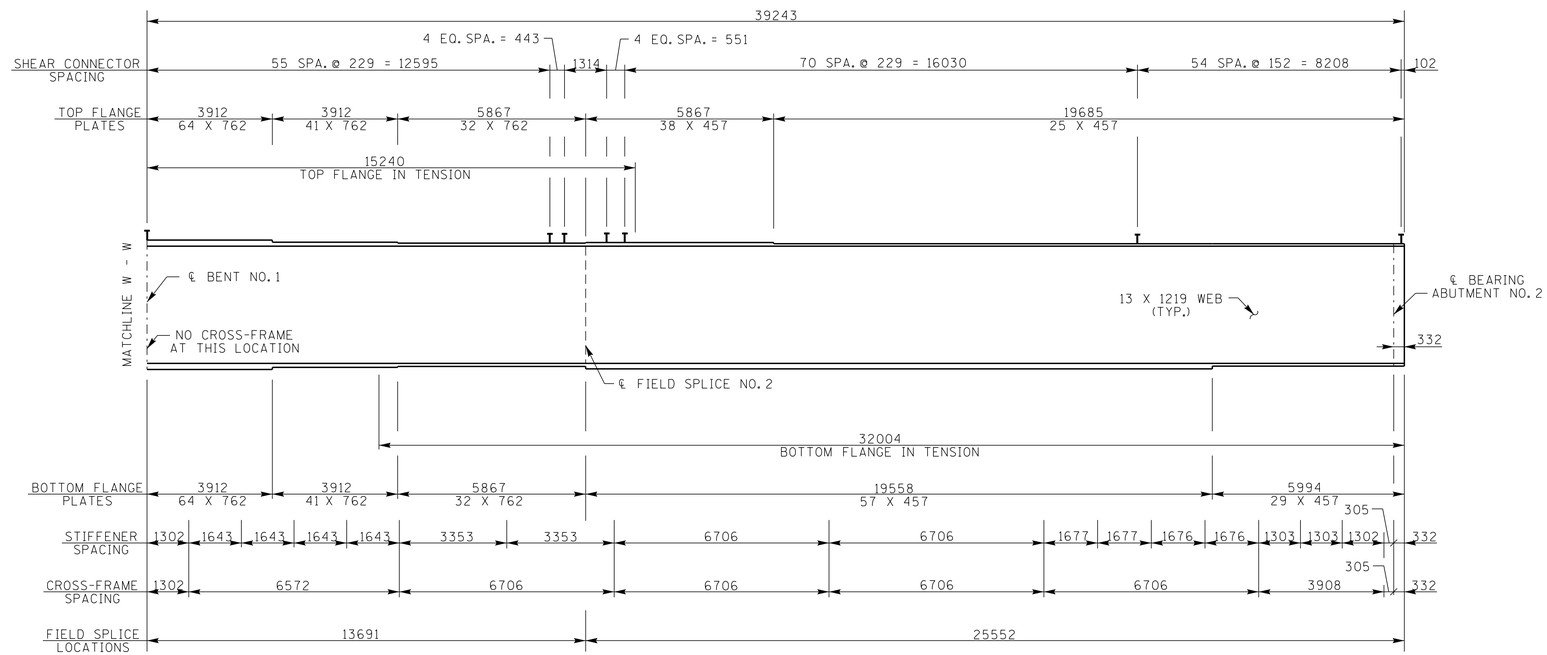


GIRDER NO. 4 ELEVATION

(SPAN NO. 2)

DIVISION OF METRIC STRUCTURES

NOTE: ALL DIMENSIONS SHOWN IN MILLIMETERS, WITH THE EXCEPTION OF STATIONS AND ELEVATIONS, UNLESS OTHERWISE NOTED.

STATE OF TENNESSEE
DEPARTMENT OF TRANSPORTATION

BRIDGE NO. 1
SUPERSTRUCTURE DETAILS
MALONEY ROAD
OVER
STATE ROUTE 115
STATION 1+269.563
KNOX COUNTY
2015

CABRINA M. DIETERS — STATE OF TENNESSEE — AGRICULTURE — 21179

CORRECT Wayne G. Sieger
ENGINEER OF STRUCTURES

DESIGNED BY ADAM PRICE DATE 1-15
DRAWN BY T. KIRK DATE 6-15
SUPERVISED BY FIELDS & DIETERS DATE 6-15
CHECKED BY ADAM PRICE DATE 8-15

U-73-55

BP1133F.DGN

CONST. NO. 47026-3279-14

| PROJECT NO. | YEAR | SHEET NO. |
|---|---|---|
| NH-115(54) | 2015 | |

REVISIONS

| NO. | DATE | BY | BRIEF DESCRIPTION |
|---|---|---|---|
| | | | |

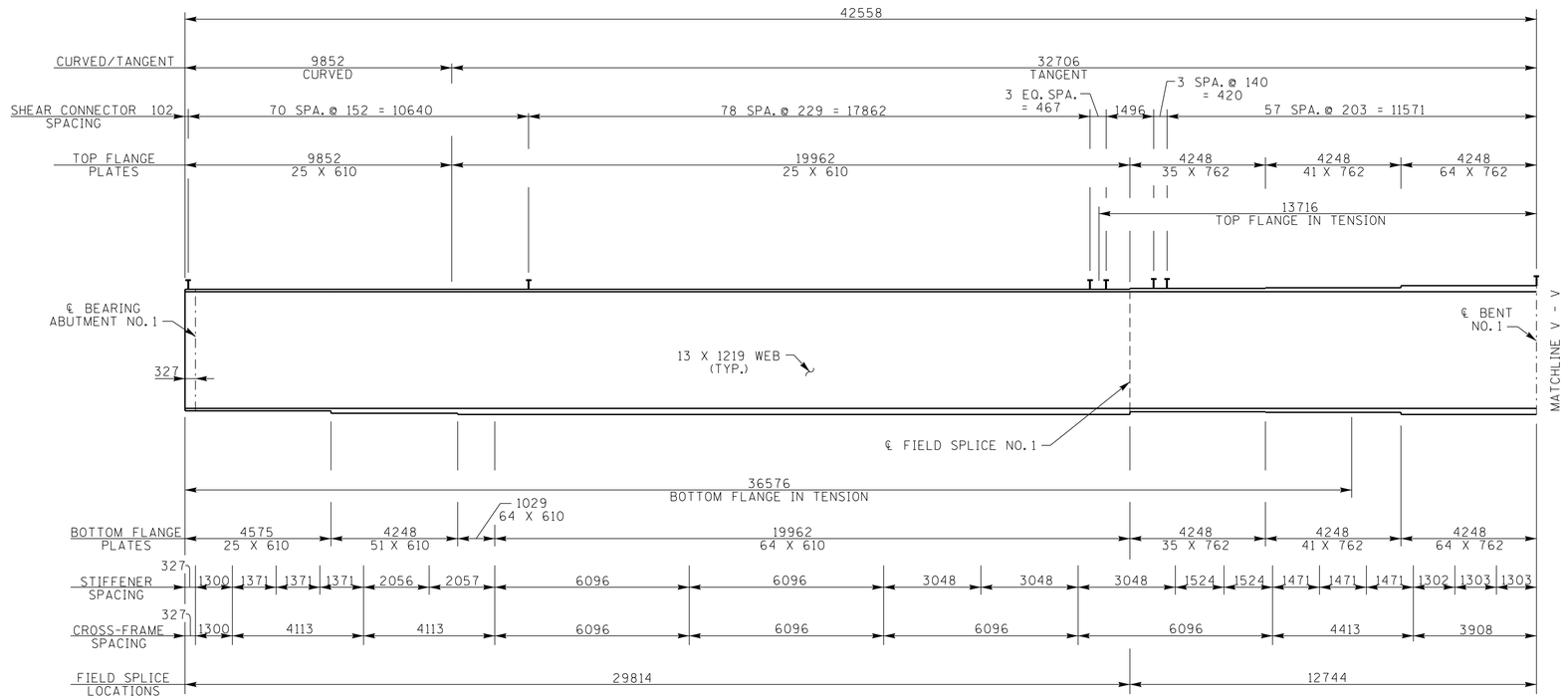


GIRDER NO. 5 ELEVATION

(SPAN NO. 1)

NOTE: ALL DIMENSIONS SHOWN IN MILLIMETERS, WITH THE EXCEPTION OF STATIONS AND ELEVATIONS, UNLESS OTHERWISE NOTED.

STATE OF TENNESSEE
DEPARTMENT OF TRANSPORTATION

BRIDGE NO. 1
SUPERSTRUCTURE DETAILS
MALONEY ROAD
OVER
STATE ROUTE 115
STATION 1+269.563
KNOX COUNTY
2015

CABRINA M. DIETERS
STATE OF TENNESSEE

CORRECT Wayne G. Sieger
ENGINEER OF STRUCTURES

| | | | |
|---|---|---|---|
| DESIGNED BY | ADAM PRICE | DATE | 1-15 |
| DRAWN BY | T. KIRK | DATE | 6-15 |
| SUPERVISED BY | FIELDS & DIETERS | DATE | 6-15 |
| CHECKED BY | ADAM PRICE | DATE | 8-15 |

U-73-56

BP1133F.DGN

CONST. NO. 47026-3279-14

| PROJECT NO. | YEAR | SHEET NO. |
|---|---|---|
| NH-115(54) | 2015 | |

REVISIONS

| NO. | DATE | BY | BRIEF DESCRIPTION |
|---|---|---|---|
| | | | |

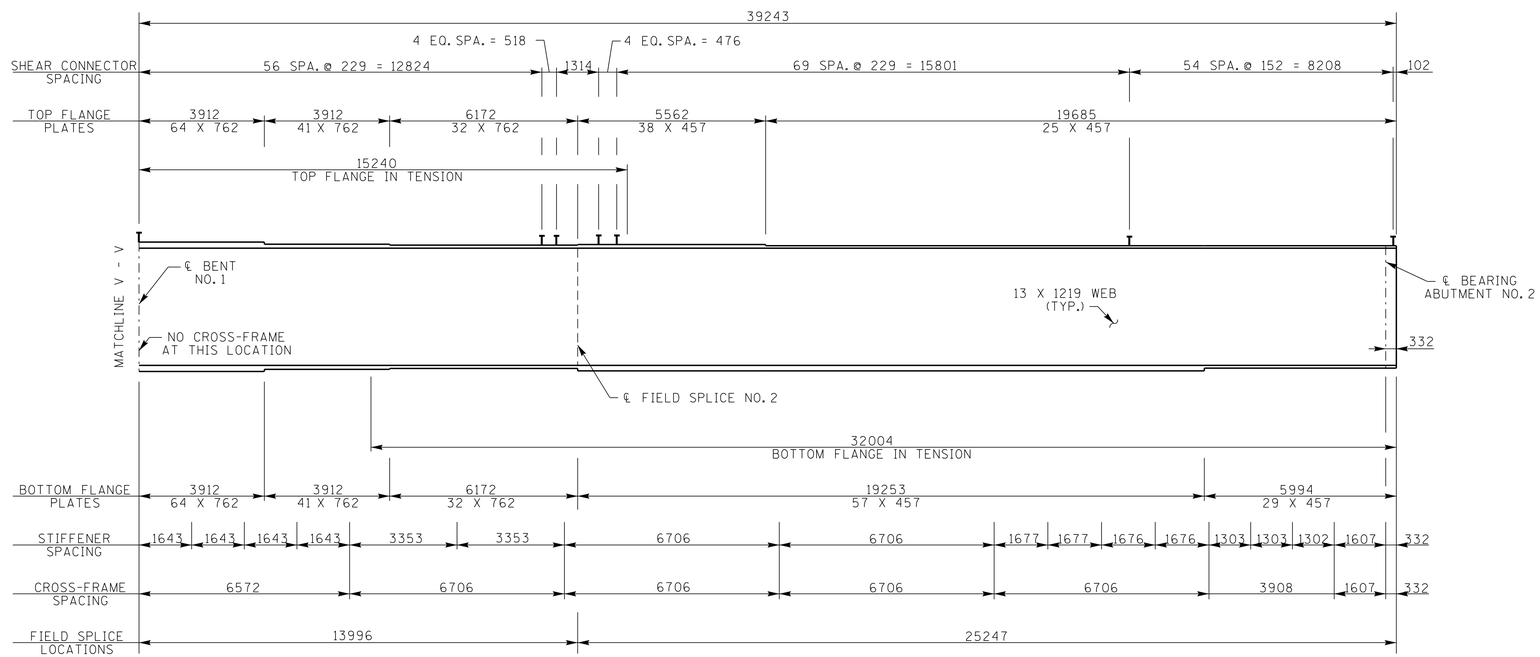


GIRDER NO. 5 ELEVATION

(SPAN NO. 2)

DIVISION OF METRIC STRUCTURES

NOTE: ALL DIMENSIONS SHOWN IN MILLIMETERS, WITH THE EXCEPTION OF STATIONS AND ELEVATIONS, UNLESS OTHERWISE NOTED.

STATE OF TENNESSEE
DEPARTMENT OF TRANSPORTATION

BRIDGE NO. 1
SUPERSTRUCTURE DETAILS
MALONEY ROAD
OVER
STATE ROUTE 115
STATION 1+269.563
KNOX COUNTY
2015

CABRINA M. DIETERS — STATE OF TENNESSEE

CORRECT Wayne G. Sieger
ENGINEER OF STRUCTURES

| | | | |
|---|---|---|---|
| DESIGNED BY | ADAM PRICE | DATE | 1-15 |
| DRAWN BY | T. KIRK | DATE | 6-15 |
| SUPERVISED BY | FIELDS & DIETERS | DATE | 6-15 |
| CHECKED BY | ADAM PRICE | DATE | 8-15 |

U-73-57

BP1133F.DGN

CONST. NO. 47026-3279-14

| PROJECT NO. | YEAR | SHEET NO. |
|---|---|---|
| NH-115(54) | 2015 | |

REVISIONS

| NO. | DATE | BY | BRIEF DESCRIPTION |
|---|---|---|---|
| | | | |

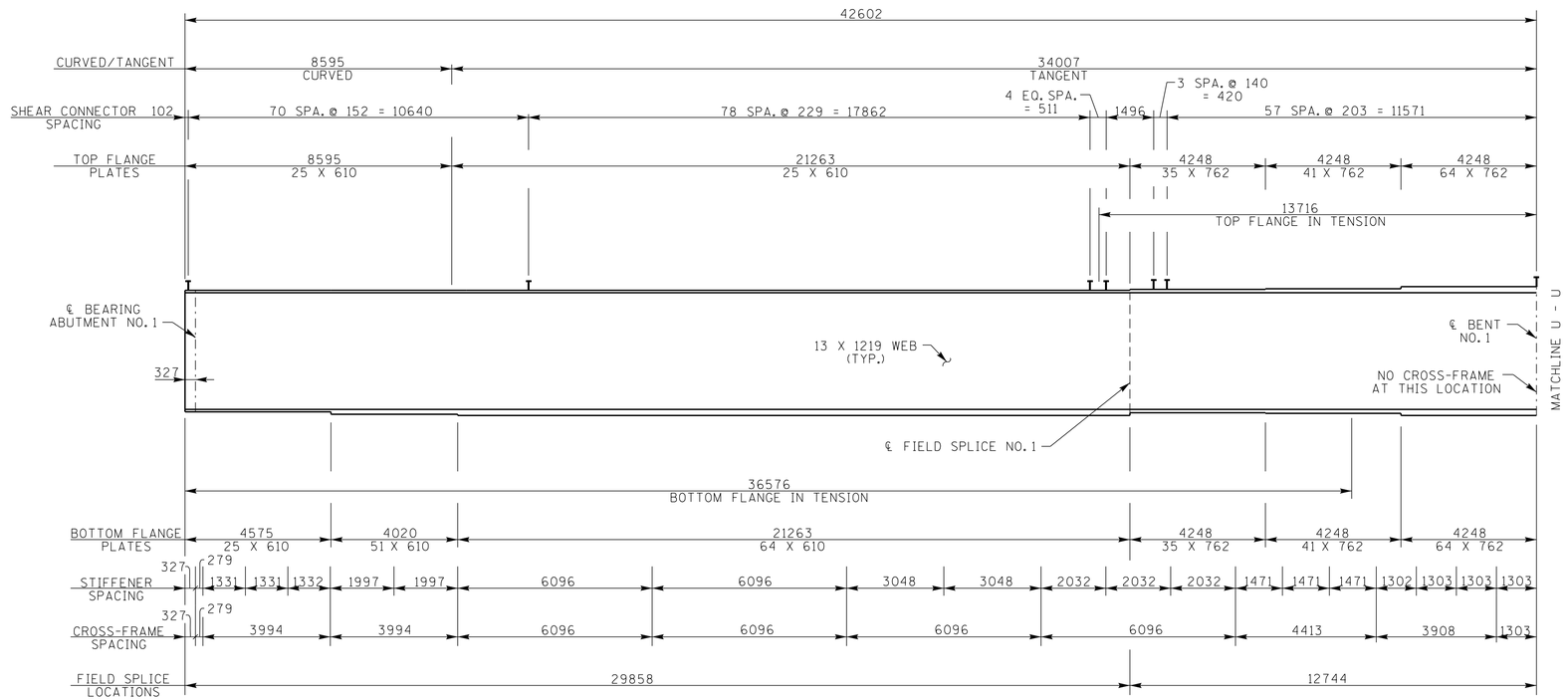


GIRDER NO. 6 ELEVATION

(SPAN NO. 1)

DIVISION OF STRUCTURES METRIC

NOTE: ALL DIMENSIONS SHOWN IN MILLIMETERS, WITH THE EXCEPTION OF STATIONS AND ELEVATIONS, UNLESS OTHERWISE NOTED.

STATE OF TENNESSEE
DEPARTMENT OF TRANSPORTATION

BRIDGE NO. 1
SUPERSTRUCTURE DETAILS
MALONEY ROAD
OVER
STATE ROUTE 115
STATION 1+269.563
KNOX COUNTY
2015

CABRINA M. DIETERS
STATE OF TENNESSEE
AGRICULTURE

CORRECT Wayne J. Tapp
ENGINEER OF STRUCTURES

DESIGNED BY ADAM PRICE DATE 1-15
DRAWN BY T. KIRK DATE 6-15
SUPERVISED BY FIELDS & DIETERS DATE 6-15
CHECKED BY ADAM PRICE DATE 8-15

U-73-58

BP1133F.DGN

CONST. NO. 47026-3279-14

| PROJECT NO. | YEAR | SHEET NO. |
|---|---|---|
| NH-115(54) | 2015 | |

REVISIONS

| NO. | DATE | BY | BRIEF DESCRIPTION |
|---|---|---|---|
| | | | |

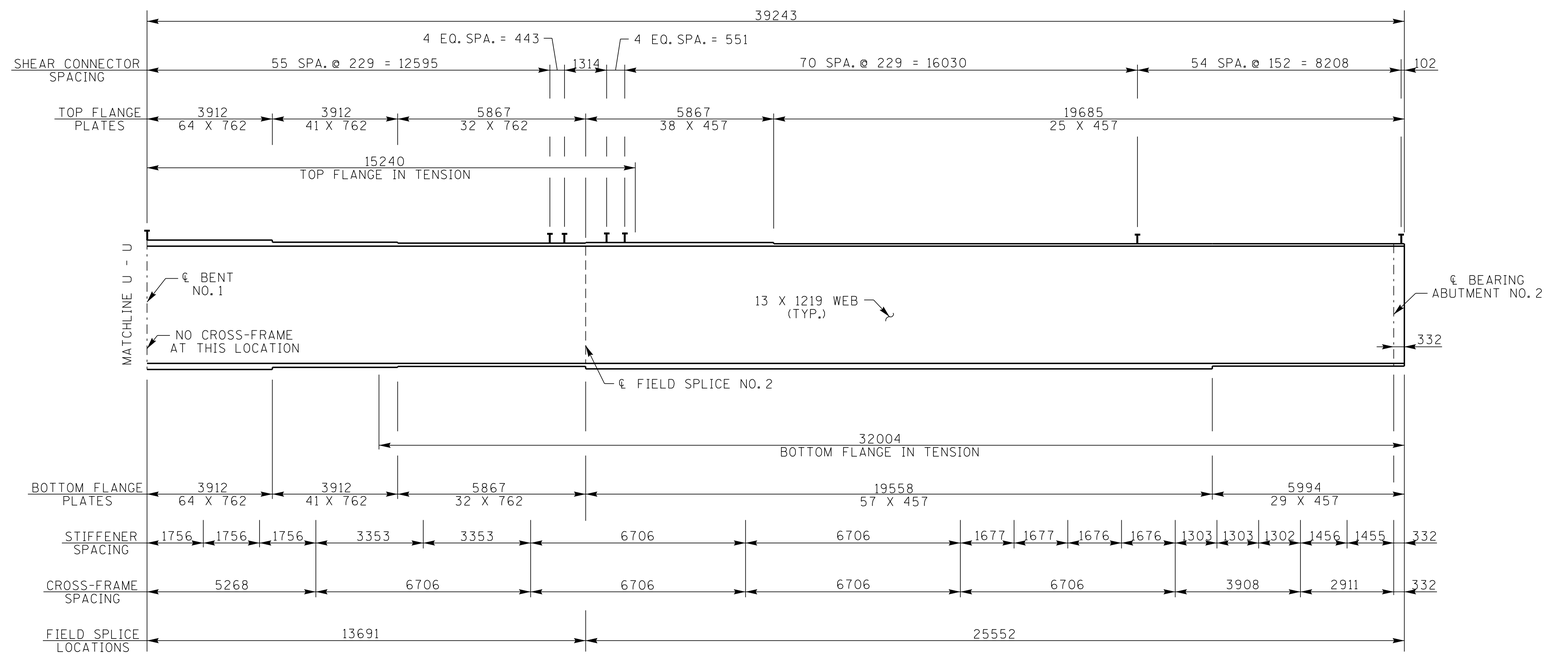


GIRDER NO. 6 ELEVATION

(SPAN NO. 2)

DIVISION OF METRIC STRUCTURES

NOTE: ALL DIMENSIONS SHOWN IN MILLIMETERS, WITH THE EXCEPTION OF STATIONS AND ELEVATIONS, UNLESS OTHERWISE NOTED.

STATE OF TENNESSEE
DEPARTMENT OF TRANSPORTATION

BRIDGE NO. 1
SUPERSTRUCTURE DETAILS
MALONEY ROAD
OVER
STATE ROUTE 115
STATION 1+269.563
KNOX COUNTY
2015

CABRINA M. DIETERS — STATE OF TENNESSEE

CORRECT Wayne G. Sieger
ENGINEER OF STRUCTURES

| | | | |
|---|---|---|---|
| DESIGNED BY | ADAM PRICE | DATE | 1-15 |
| DRAWN BY | T. KIRK | DATE | 6-15 |
| SUPERVISED BY | FIELDS & DIETERS | DATE | 6-15 |
| CHECKED BY | ADAM PRICE | DATE | 8-15 |

U-73-59

GR1133F.DGN

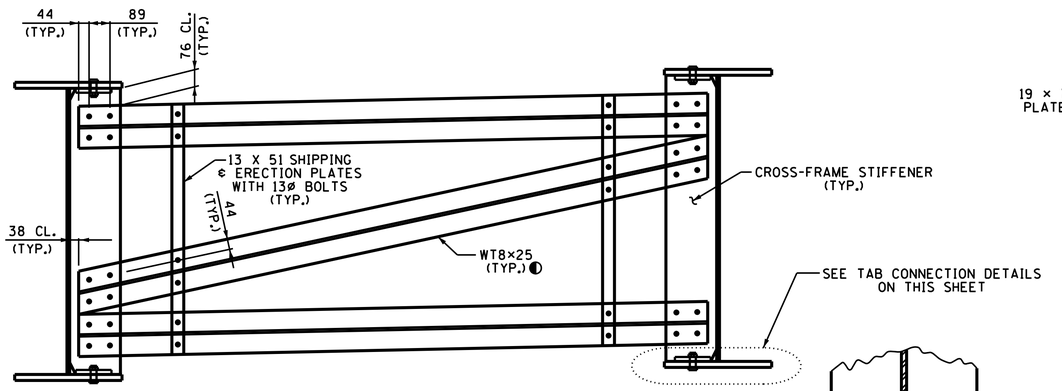


NOTE: USE 25ø H. S. BOLTS (A325 TYPE 3)
NOTE: ALL CROSS-FRAME MEMBERS TO BE ASTM A709M GRADE 345W STEEL.

◐ DENOTES: SECTION IS SPECIFIED ON THIS SHEET WITH ENGLISH UNITS BECAUSE NO METRIC EQUIVALENT EXISTS.

## CROSS-FRAME DETAIL

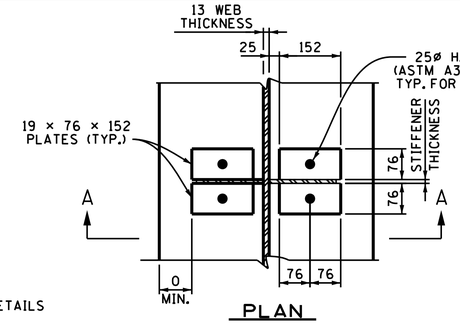


## PLAN

NOTE: TYPICAL TOP AND BOTTOM FLANGE. (BOTTOM FLANGE DETAILS SHOWN.)
NOTE: TAB YIELD STRENGTH SHALL MATCH STIFFENER YIELD STRENGTH. TAB SIZE AND LOCATION SHALL BE AS SHOWN REGARDLESS OF STIFFENER WIDTH.
NOTE: 25ø - A325 TYPE 3 BOLTS TO BE TORQUED TO AASHTO SPECIFICATION FOR FRICTION CONNECTION PRIOR TO TAB TO STIFFENER WELD.
NOTE: WEB STIFFENER SHALL BE TIGHT FIT WITHIN AWS D1.1 FABRICATION TOLERANCE.

CONST. NO. 47026-3279-14

| PROJECT NO. | YEAR | SHEET NO. |
|---|---|---|
| NH-115(54)__ | 2015 | |

REVISIONS

| NO. | DATE | BY | BRIEF DESCRIPTION |
|---|---|---|---|
| | | | |

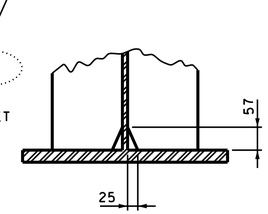


## STIFFENER CLIP

(TOP ℄ BOTTOM)

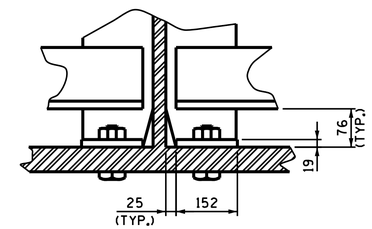


## SECTION A-A

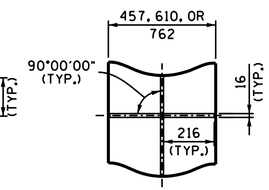


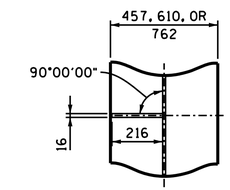


## TAB CONNECTION DETAILS

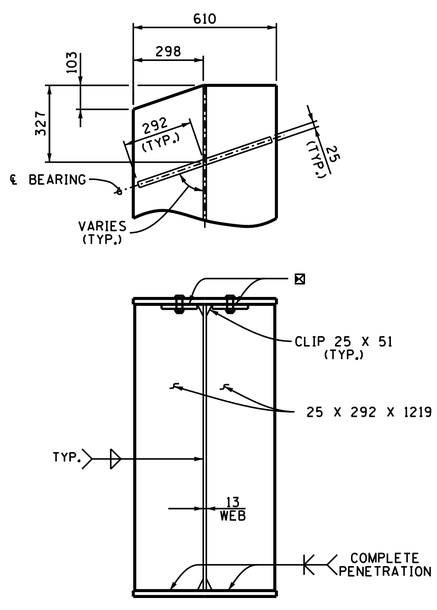


## BEARING STIFFENERS

ABUTMENT NO. 1

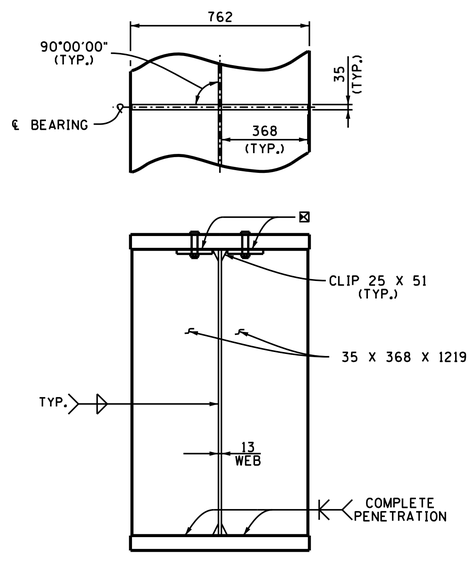


## BEARING STIFFENERS

BENT NO. 1

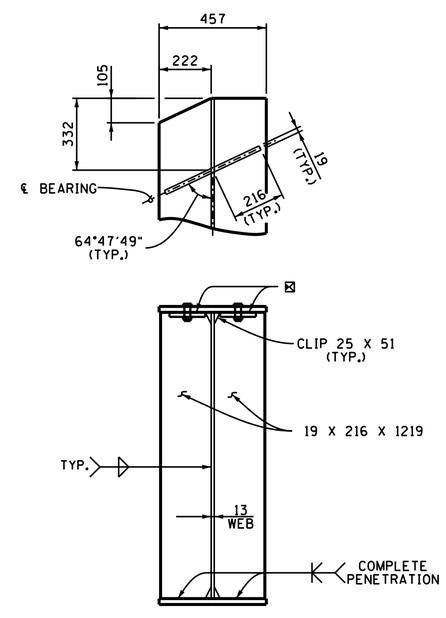


## BEARING STIFFENERS

ABUTMENT NO. 2

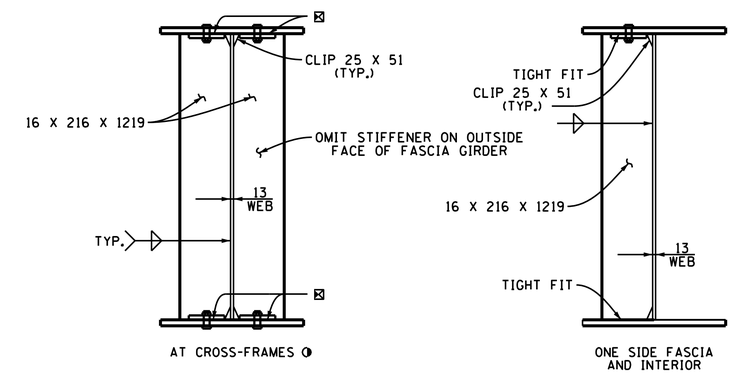


AT CROSS-FRAMES ◐

ONE SIDE FASCIA AND INTERIOR

## INTERMEDIATE STIFFENERS

◐ DENOTES: CROSS-FRAME CONNECTION DETAILS NOT SHOWN

⊠ DENOTES: TIGHT FIT TO FLANGE (TAB CONNECTION DETAILS REQUIRED FOR TENSION AND COMPRESSION FLANGES.)

NOTE: CROSS-FRAME CONNECTION DETAILS NOT SHOWN
⊠ DENOTES: TIGHT FIT TO FLANGE (TAB CONNECTION DETAILS REQUIRED FOR TOP FLANGES.)

DIVISION OF METRIC STRUCTURES

NOTE: ALL DIMENSIONS SHOWN IN MILLIMETERS, WITH THE EXCEPTION OF STATIONS AND ELEVATIONS, UNLESS OTHERWISE NOTED.

STATE OF TENNESSEE
DEPARTMENT OF TRANSPORTATION

BRIDGE NO. 1
SUPERSTRUCTURE DETAILS
MALONEY ROAD
OVER
STATE ROUTE 115
STATION 1+269.563
KNOX COUNTY
2015

CABRINA M. DIETERS — STATE OF TENNESSEE — AGRICULTURE — 1994

CORRECT Wayne J. Sager
ENGINEER OF STRUCTURES

| | | |
|---|---|---|
| DESIGNED BY ADAM PRICE | DATE 12-14 | |
| DRAWN BY RODNEY CHANDLER | DATE 07-15 | |
| SUPERVISED BY CMD/JWF | DATE 07-15 | |
| CHECKED BY ADAM PRICE | DATE 09-15 | |

U-73-59

GR1133F.DGN

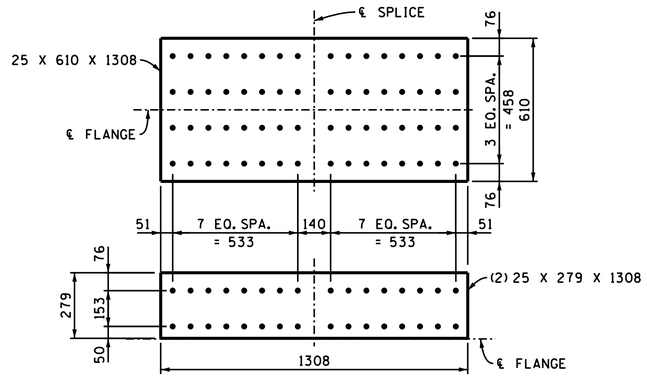


PLAN OF TOP FLANGE SPLICE PLATES

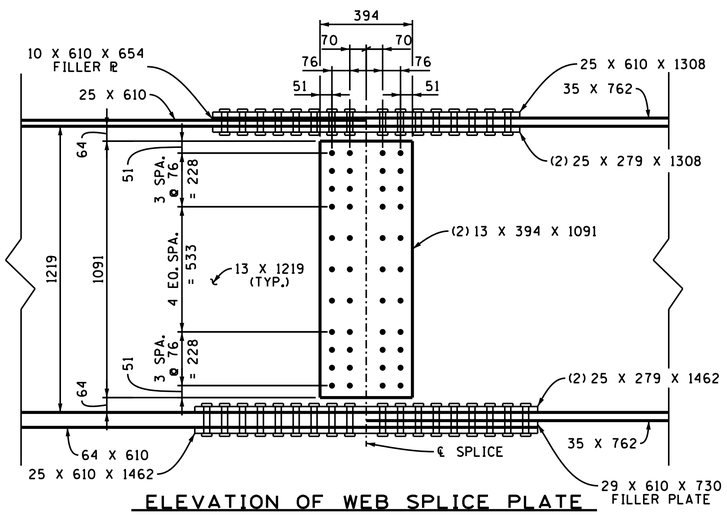


ELEVATION OF WEB SPLICE PLATE

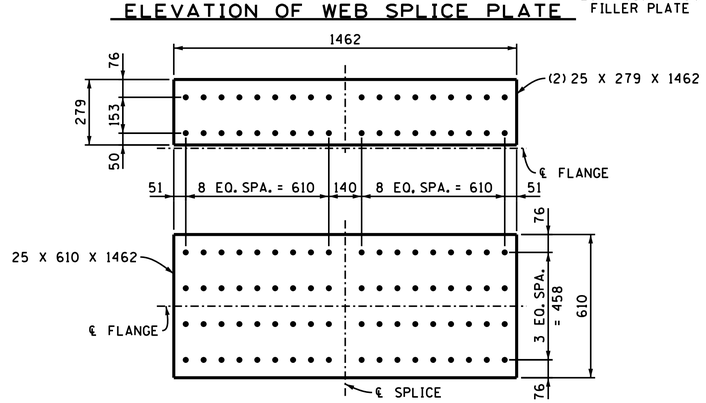


PLAN OF BOTTOM FLANGE SPLICE PLATES

FIELD SPLICE NO. 1

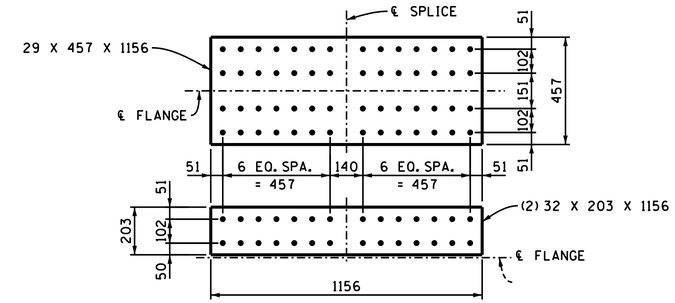


PLAN OF TOP FLANGE SPLICE PLATES

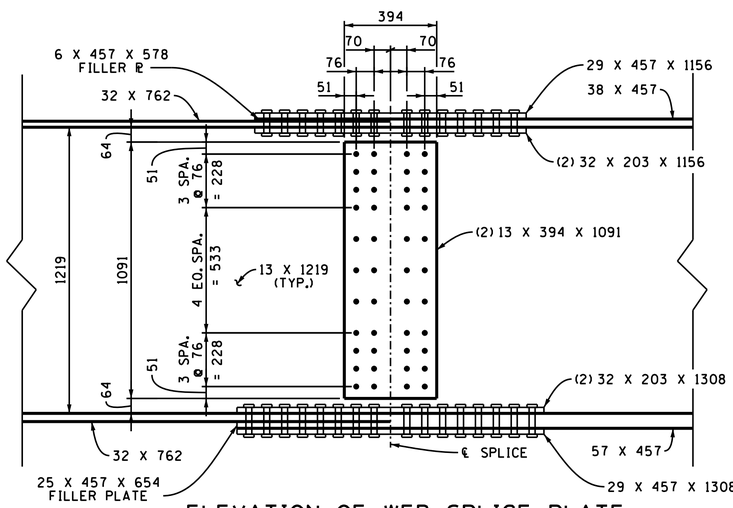


ELEVATION OF WEB SPLICE PLATE

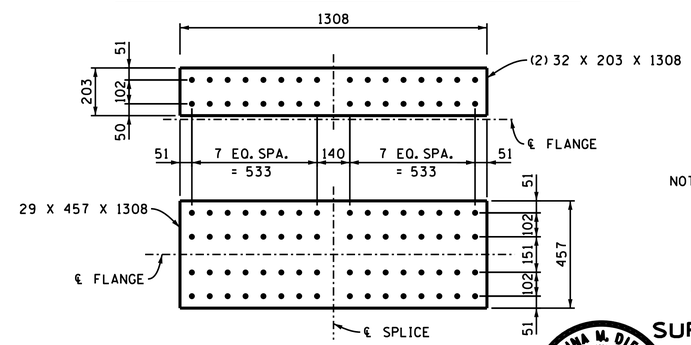


PLAN OF BOTTOM FLANGE SPLICE PLATES

FIELD SPLICE NO. 2

CONST. NO. 47026-3279-14

| PROJECT NO. | YEAR | SHEET NO. |
|---|---|---|
| NH-115(54)__ | 2015 | |

REVISIONS

| NO. | DATE | BY | BRIEF DESCRIPTION |
|---|---|---|---|
| | | | |

DIVISION OF METRIC STRUCTURES

NOTE: ALL DIMENSIONS SHOWN IN MILLIMETERS, WITH THE EXCEPTION OF STATIONS AND ELEVATIONS, UNLESS OTHERWISE NOTED.

STATE OF TENNESSEE
DEPARTMENT OF TRANSPORTATION

BRIDGE NO. 1
SUPERSTRUCTURE DETAILS
MALONEY ROAD
OVER
STATE ROUTE 115
STATION 1+269.563
KNOX COUNTY
2015

CARMINA M. DIETERS — STATE OF TENNESSEE — REGISTERED ENGINEER — AGRICULTURE

CORRECT Wayne J. Jager
ENGINEER OF STRUCTURES

U-73-60A

| | | | |
|---|---|---|---|
| DESIGNED BY | ADAM PRICE | DATE | 12-14 |
| DRAWN BY | RODNEY CHANDLER | DATE | 07-15 |
| SUPERVISED BY | CMD/JWF | DATE | 07-15 |
| CHECKED BY | ADAM PRICE | DATE | 09-15 |

AB1133F.DGN

NOTE: RISER BLOCKS SHALL BE POURED MONOLITHICALLY WITH ABUTMENT BEAM.

NOTE: WHEN POURING WINGWALLS, PROVISIONS SHALL BE MADE FOR SETTING REINFORCING STEEL FOR WINGPOSTS AND PARAPET. FOR DETAILS OF WINGPOSTS AND PARAPET SEE STD. DWG NO. STD-11-1.

NOTE: THE ENTIRE ABUTMENT BACKWALL SHALL BE POURED CONCURRENTLY WITH POUR NO. 4. SEE DWG. NO. U-73-44 FOR DETAILS.

NOTE: COST OF BRIDGE RAIL AND POST IS TO BE INCLUDED IN THE UNIT PRICE BID FOR THE BRIDGE RAIL SYSTEM.

NOTE: WHEN POURING ABUTMENT BEAM, PROVISIONS SHALL BE MADE FOR SETTING ANCHOR BOLTS. IF THE CONTRACTOR ELECTS TO DRILL THE HOLES FOR THE ANCHOR BOLTS, THE REINFORCING STEEL SHALL BE PLACED SO AS NOT TO INTERFERE WITH THE DRILLING. BOLT PROJECTION 254.

NOTE: WINGBEAM PILES SHALL BE DRIVEN TO THE PLANS TIP ELEVATION OR REFUSAL. SEISMIC ATTACHMENT IS NOT REQUIRED FOR WINGBEAM PILES.

NOTE: SEE STANDARD DRAWING STD-6-1 FOR PILE DETAILS AND NOTES.

NOTE: FOR ELEVATION "A"-"A", ELEVATION "B"-"B", AND SECTION "E"-"E" SEE DWG. NO. U-73-63. FOR SECTION "C"-"C" AND SECTION "D"-"D" SEE DWG. NO. U-73-62.

CONST. NO. 47026-3279-14

| PROJECT NO. | YEAR | SHEET NO. |
|---|---|---|
| NH-115(54) | 2015 | |

REVISIONS

| NO. | DATE | BY | BRIEF DESCRIPTION |
|---|---|---|---|
| | | | |

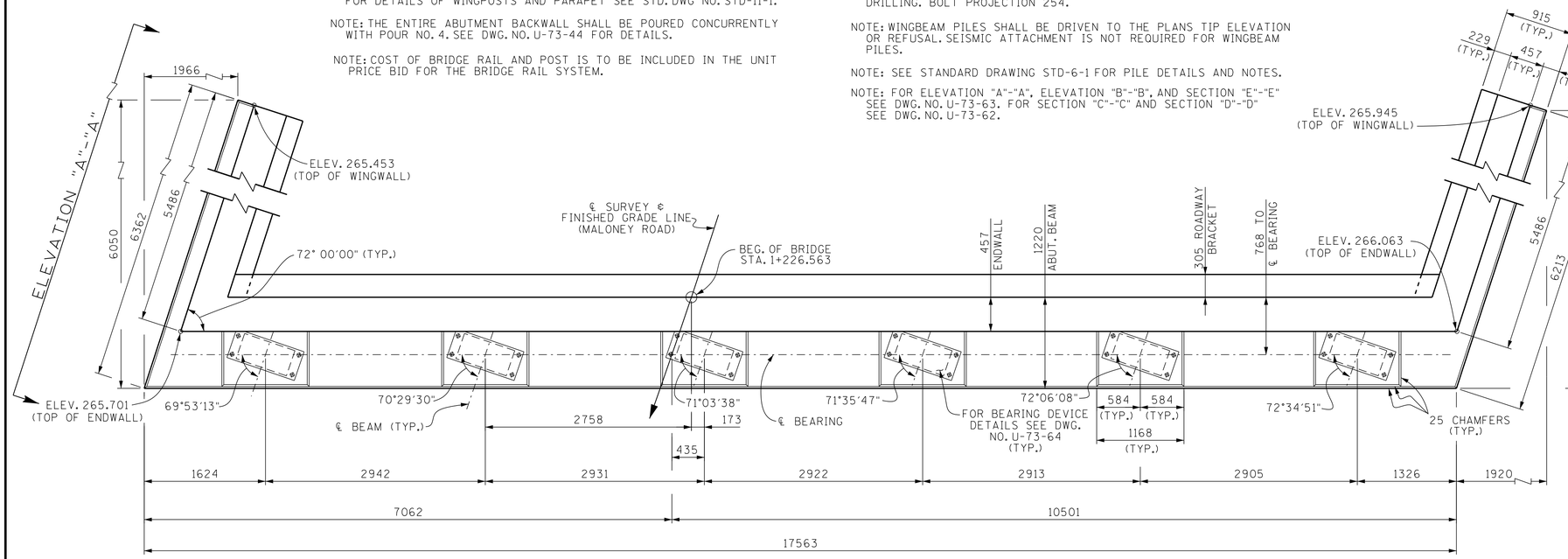


PLAN

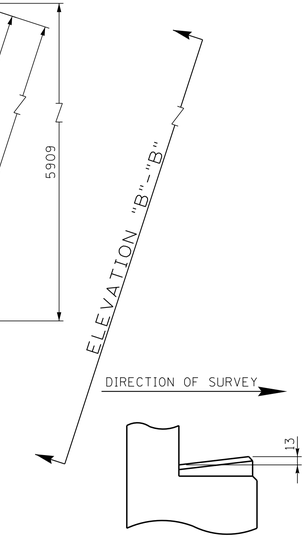


RISER BLOCK SLOPE DETAIL

NOTE: RISER BLOCK BEARING PAD SURFACE TO CONFORM TO BOTTOM OF BEAM GRADE.

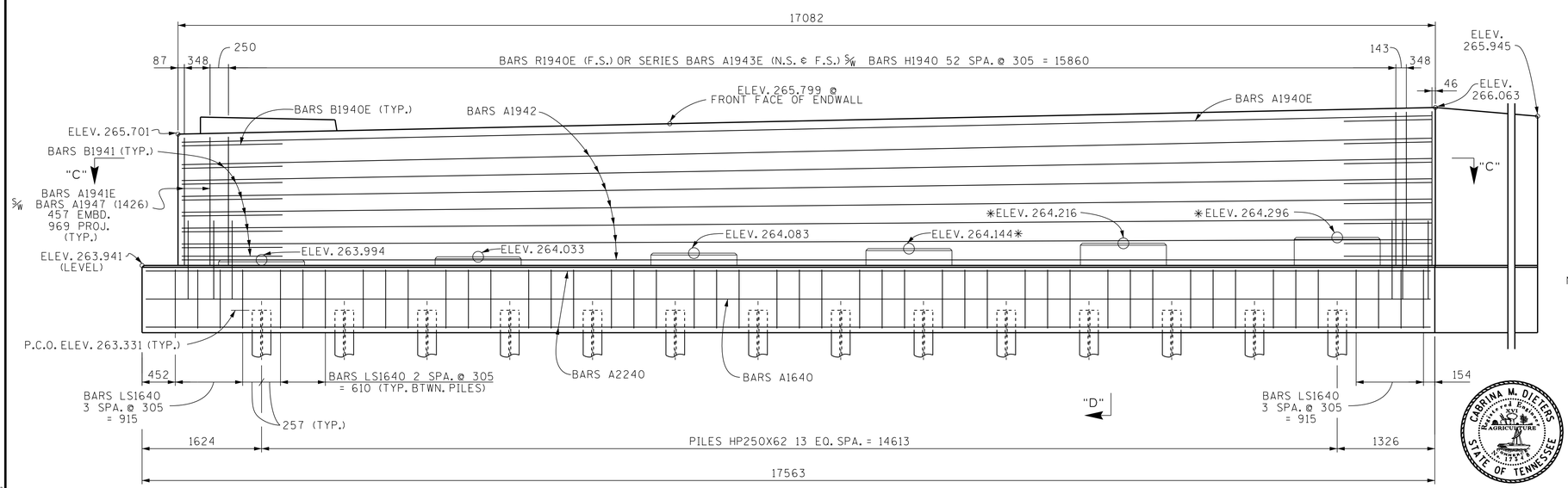


ELEVATION
(LOOKING BACK ON SURVEY)

P.C.O. DENOTES: PILE CUT-OFF

F.S. DENOTES: FAR SIDE
N.S. DENOTES: NEAR SIDE

*DENOTES: RISER TO BE REINFORCED. SEE DWG. NO. U-73-62 FOR RISER BLOCK REINFORCING DETAIL.

ESTIMATED QUANTITIES

| CONCRETE CLASS "A" M3 | EPOXY COATED REINFORCING KG | REINFORCING STEEL KG |
|---|---|---|
| 55 | 1095 | 3473 |

DIVISION OF STRUCTURES — METRIC

NOTE: ALL DIMENSIONS SHOWN IN MILLIMETERS, WITH THE EXCEPTION OF STATIONS AND ELEVATIONS, UNLESS OTHERWISE NOTED.

STATE OF TENNESSEE
DEPARTMENT OF TRANSPORTATION
BRIDGE NO. 1
ABUTMENT NO. 1
MALONEY ROAD
OVER
STATE ROUTE 115
STATION 1+269.563
KNOX COUNTY
2015

CABRINA M. DIETERS — REGISTERED ENGINEER — 22 — AGRICULTURE — STATE OF TENNESSEE

CORRECT _____ ENGINEER OF STRUCTURES

| | | | |
|---|---|---|---|
| DESIGNED BY | ADAM PRICE | DATE | 12-14 |
| DRAWN BY | CHRIS STAPLER | DATE | 06-15 |
| SUPERVISED BY | C.M.D./J.W.F. | DATE | 06-15 |
| CHECKED BY | ADAM PRICE | DATE | 09-15 |

U-73-61

AB1133F.DGN

CONST. NO. 47026-3279-14

| PROJECT NO. | YEAR | SHEET NO. |
|---|---|---|
| NH-115(54) | 2015 | |

REVISIONS

| NO. | DATE | BY | BRIEF DESCRIPTION |
|---|---|---|---|
| | | | |

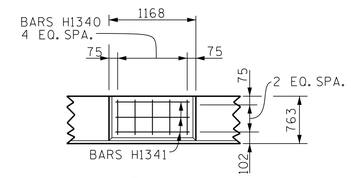


PLAN

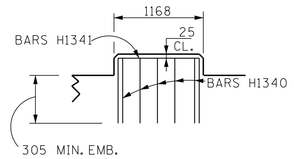


ELEVATION

RISER BLOCK REINFORCING DETAIL

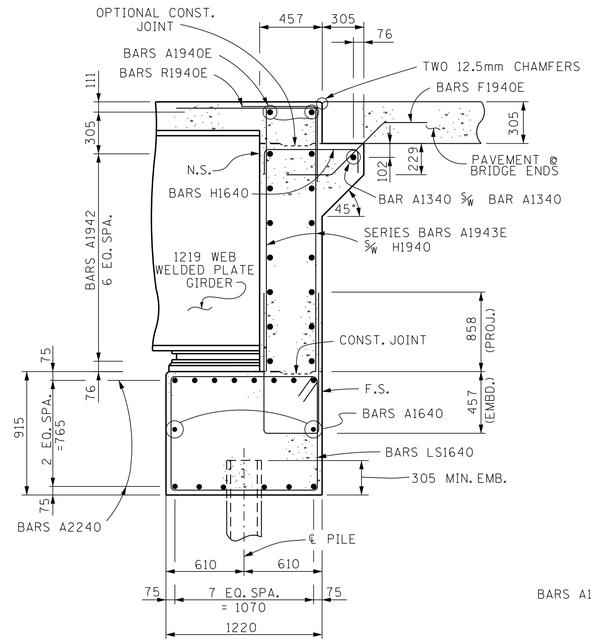


SECTION "D"-"D"

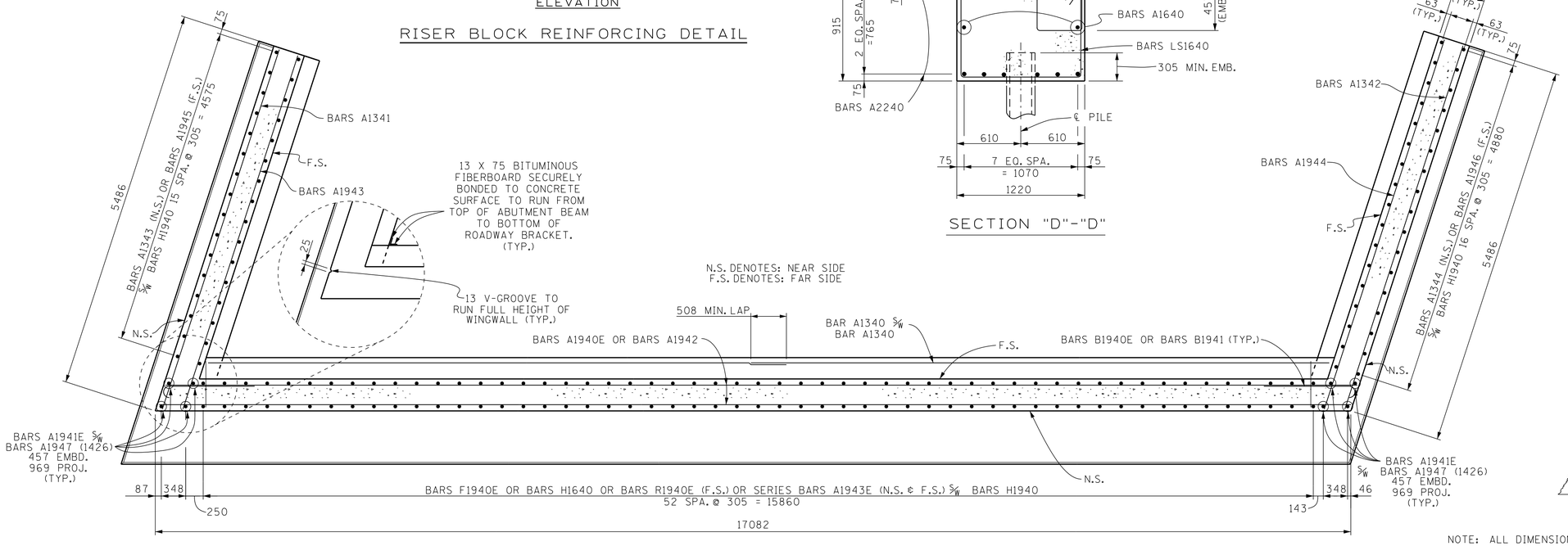


N.S. DENOTES: NEAR SIDE
F.S. DENOTES: FAR SIDE

SECTION "C"-"C"

NOTE: ALL DIMENSIONS SHOWN IN MILLIMETERS, WITH THE EXCEPTION OF STATIONS AND ELEVATIONS, UNLESS OTHERWISE NOTED.

STATE OF TENNESSEE
DEPARTMENT OF TRANSPORTATION

BRIDGE NO. 1
ABUTMENT NO. 1 DETAILS
MALONEY ROAD
OVER
STATE ROUTE 115
STATION 1+269.563
KNOX COUNTY
2015

CORRECT Wayne G. Segel
ENGINEER OF STRUCTURES

| | | | |
|---|---|---|---|
| DESIGNED BY | ADAM PRICE | DATE | 12-14 |
| DRAWN BY | CHRIS STAPLER | DATE | 06-15 |
| SUPERVISED BY | C.M.D./J.W.F. | DATE | 06-15 |
| CHECKED BY | ADAM PRICE | DATE | 09-15 |

U-73-62

AB1133F.DGN

CONST. NO. 47026-3279-14

| PROJECT NO. | YEAR | SHEET NO. |
|---|---|---|
| NH-115(54) | 2015 | |

REVISIONS

| NO. | DATE | BY | BRIEF DESCRIPTION |
|---|---|---|---|
| | | | |

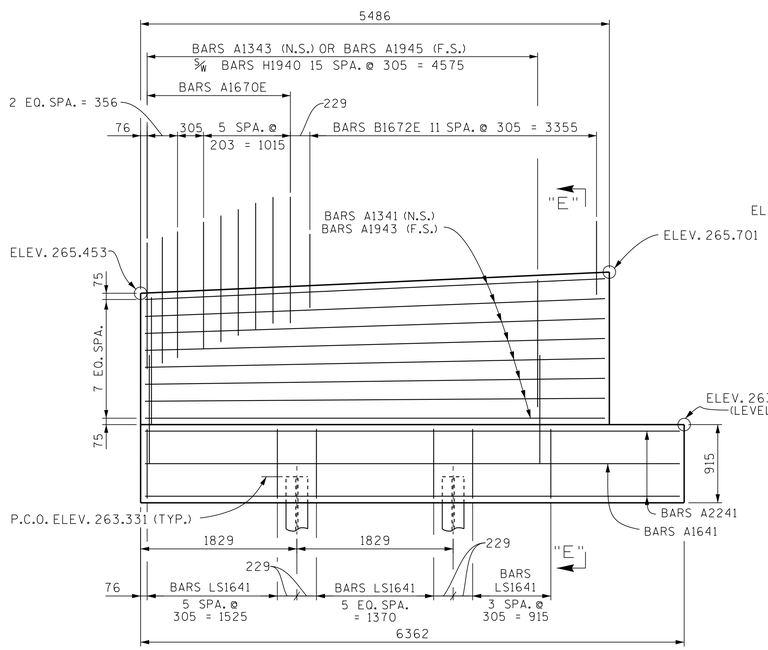


ELEVATION "A"-"A"

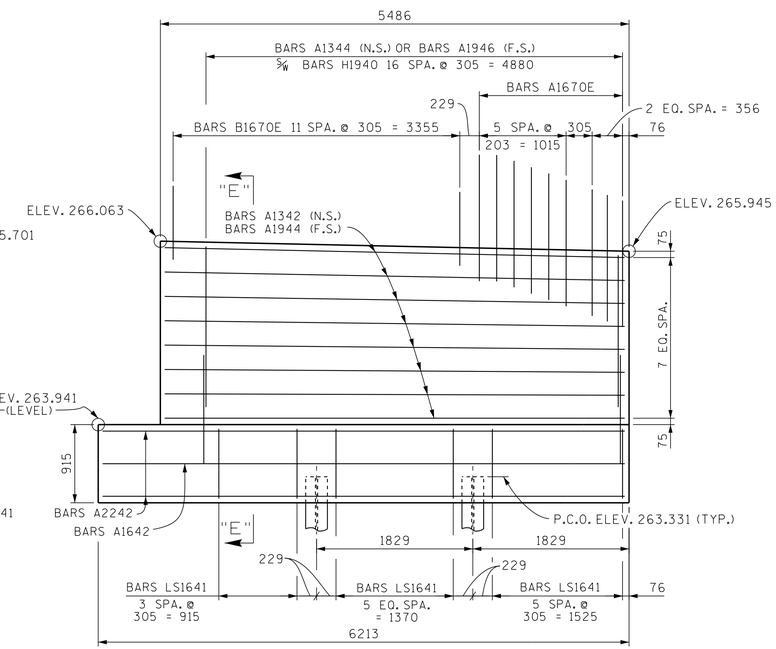


ELEVATION "B"-"B"

N.S. DENOTES: NEAR SIDE
F.S. DENOTES: FAR SIDE

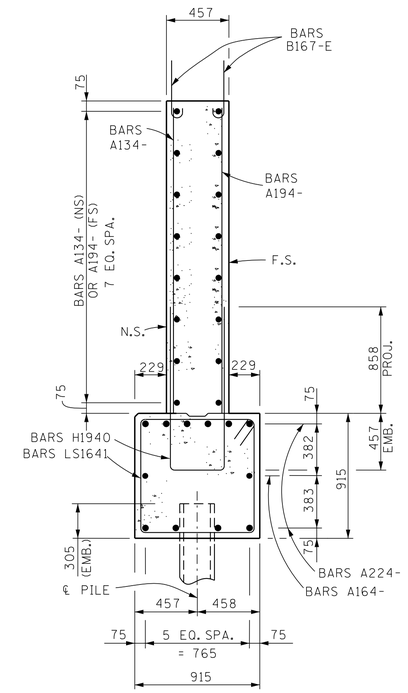


SECTION "E"-"E"

NOTE: ALL DIMENSIONS SHOWN IN MILLIMETERS, WITH THE EXCEPTION OF STATIONS AND ELEVATIONS, UNLESS OTHERWISE NOTED.

STATE OF TENNESSEE
DEPARTMENT OF TRANSPORTATION

BRIDGE NO. 1
ABUTMENT NO. 1 DETAILS
MALONEY ROAD
OVER
STATE ROUTE 115
STATION 1+269.563
KNOX COUNTY
2015

CORRECT _____
ENGINEER OF STRUCTURES

| | | | |
|---|---|---|---|
| DESIGNED BY | ADAM PRICE | DATE | 12-14 |
| DRAWN BY | CHRIS STAPLER | DATE | 06-15 |
| SUPERVISED BY | C.M.D./J.W.F. | DATE | 06-15 |
| CHECKED BY | ADAM PRICE | DATE | 09-15 |

U-73-63

AB1133F.DGN

CONST. NO. 47026-3279-14

| PROJECT NO. | YEAR | SHEET NO. |
|---|---|---|
| NH-115(54) | 2015 | |

REVISIONS

| NO. | DATE | BY | BRIEF DESCRIPTION |
|---|---|---|---|
| | | | |

NOTE: ELASTOMER: SHORE "A" HARDNESS = 60
SHEAR MODULUS @ 23° C: 896 kPa MIN.
1379 kPa MAX.

NOTE: USE ASTM A709M GRADE 345 STEEL UNLESS OTHERWISE NOTED.

NOTE: ANCHOR BOLTS SHALL BE GALVANIZED ACCORDING TO ASTM F2329 OR MECHANICALLY GALVANIZED TO ASTM B695.

NOTE: ALL EXPOSED SURFACES OF ASSEMBLED BEARING DEVICES TO BE PAINTED UTILIZING THE FOLLOWING PAINT: INORGANIC ZINC WITH URETHANE FINISH BROWN TOP COAT CONFORMING TO FEDERAL STANDARD 595C (20059).

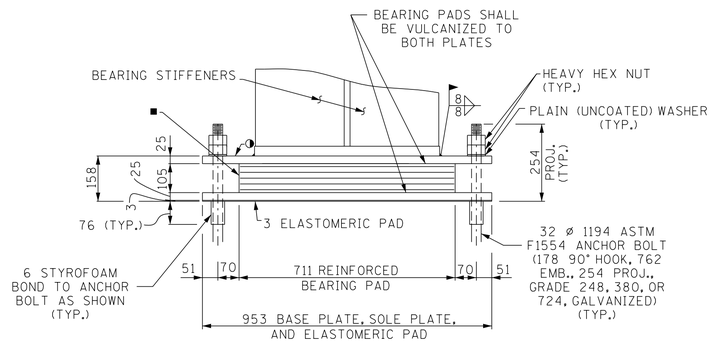


ELEVATION

◑ DENOTES: 25 X 406 X 953 SOLE PLATE

■ DENOTES: REINFORCED ELASTOMERIC BEARING CONSISTING OF:
FOUR - 19 THICK INTERNAL LAYERS OF ELASTOMER
TWO - 6 THICK COVER LAYERS OF ELASTOMER
FIVE - 3 THICK GRADE 250 STEEL REINF. LAYERS

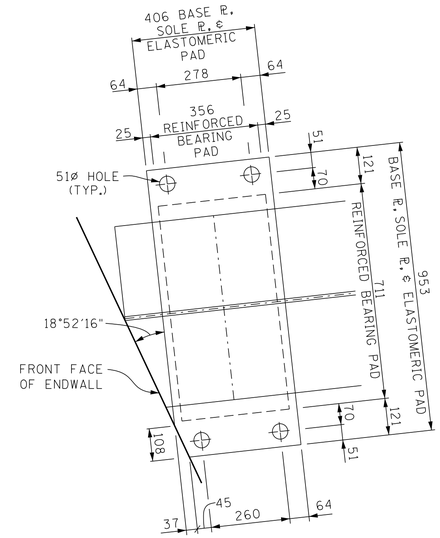


PLAN

# BEARING DEVICE DETAILS

DIVISION OF METRIC STRUCTURES

NOTE: ALL DIMENSIONS SHOWN IN MILLIMETERS, WITH THE EXCEPTION OF STATIONS AND ELEVATIONS, UNLESS OTHERWISE NOTED.

STATE OF TENNESSEE
DEPARTMENT OF TRANSPORTATION
BRIDGE NO. 1
ABUTMENT NO. 1 DETAILS
MALONEY ROAD
OVER
STATE ROUTE 115
STATION 1+269.563
KNOX COUNTY
2015

CABRINA M. DIETERS — STATE OF TENNESSEE — AGRICULTURE

CORRECT Wayne G. Sieger
ENGINEER OF STRUCTURES

DESIGNED BY ADAM PRICE DATE 12-14
DRAWN BY CHRIS STAPLER DATE 06-15
SUPERVISED BY C.M.D./J.W.F. DATE 06-15
CHECKED BY ADAM PRICE DATE 09-15

U-73-64

AB1133F.DGN

NOTE: RISER BLOCKS SHALL BE POURED MONOLITHICALLY WITH ABUTMENT BEAM.

NOTE: WHEN POURING WINGWALLS, PROVISIONS SHALL BE MADE FOR SETTING REINFORCING STEEL FOR WINGPOSTS AND PARAPET. FOR DETAILS OF WINGPOSTS AND PARAPET SEE STD. DWG NO. STD-11-1.

NOTE: THE ENTIRE ABUTMENT BACKWALL SHALL BE POURED CONCURRENTLY WITH POUR NO. 4. SEE DWG. NO. U-73-44 FOR DETAILS.

NOTE: COST OF BRIDGE RAIL AND POST IS TO BE INCLUDED IN THE UNIT PRICE BID FOR THE BRIDGE RAIL SYSTEM.

NOTE: WHEN POURING ABUTMENT BEAM, PROVISIONS SHALL BE MADE FOR SETTING ANCHOR BOLTS. IF THE CONTRACTOR ELECTS TO DRILL THE HOLES FOR THE ANCHOR BOLTS, THE REINFORCING STEEL SHALL BE PLACED SO AS NOT TO INTERFERE WITH THE DRILLING. BOLT PROJECTION 254.

NOTE: WINGBEAM PILES SHALL BE DRIVEN TO THE PLANS TIP ELEVATION OR REFUSAL. SEISMIC ATTACHMENT IS NOT REQUIRED FOR WINGBEAM PILES.

NOTE: SEE STANDARD DRAWING STD-6-1 FOR PILE DETAILS AND NOTES.

NOTE: FOR ELEVATION "A"-"A", ELEVATION "B"-"B", AND SECTION "E"-"E" SEE DWG. NO. U-73-67. FOR SECTION "C"-"C" AND SECTION "D"-"D" SEE DWG. NO. U-73-66.

CONST. NO. 47026-3279-14

| PROJECT NO. | YEAR | SHEET NO. |
|---|---|---|
| NH-115(54) | 2015 | |

REVISIONS

| NO. | DATE | BY | BRIEF DESCRIPTION |
|---|---|---|---|
| | | | |

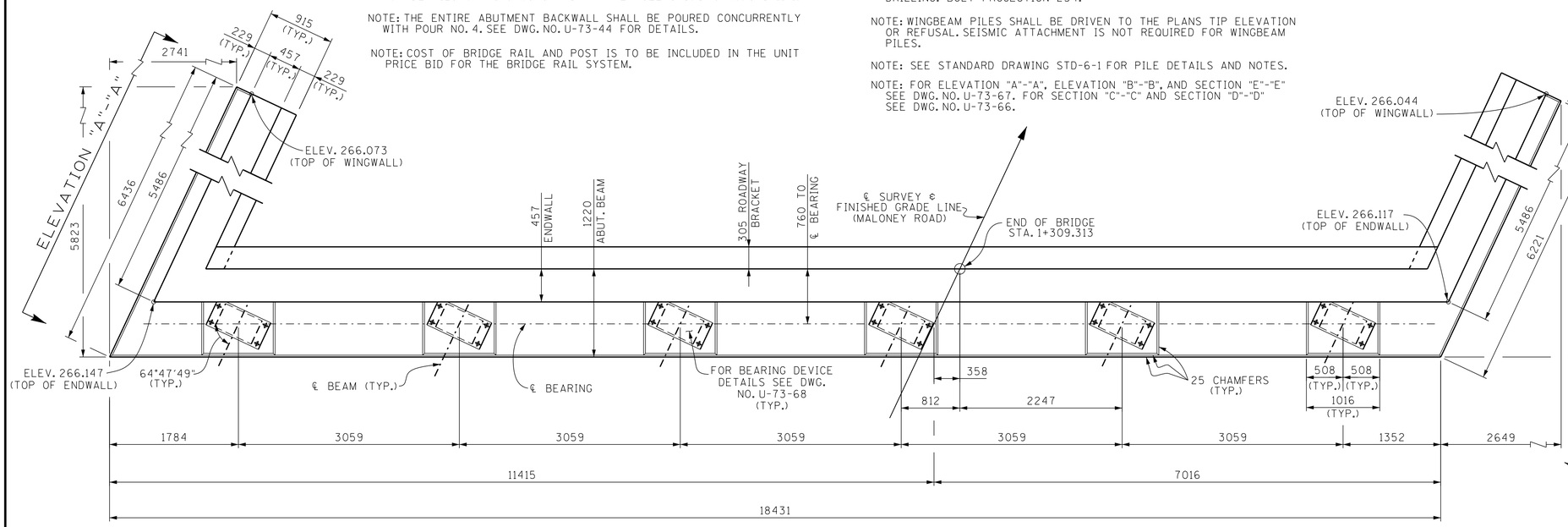


PLAN

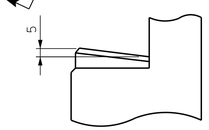


RISER BLOCK SLOPE DETAIL

NOTE: RISER BLOCK BEARING PAD SURFACE TO CONFORM TO BOTTOM OF BEAM GRADE.

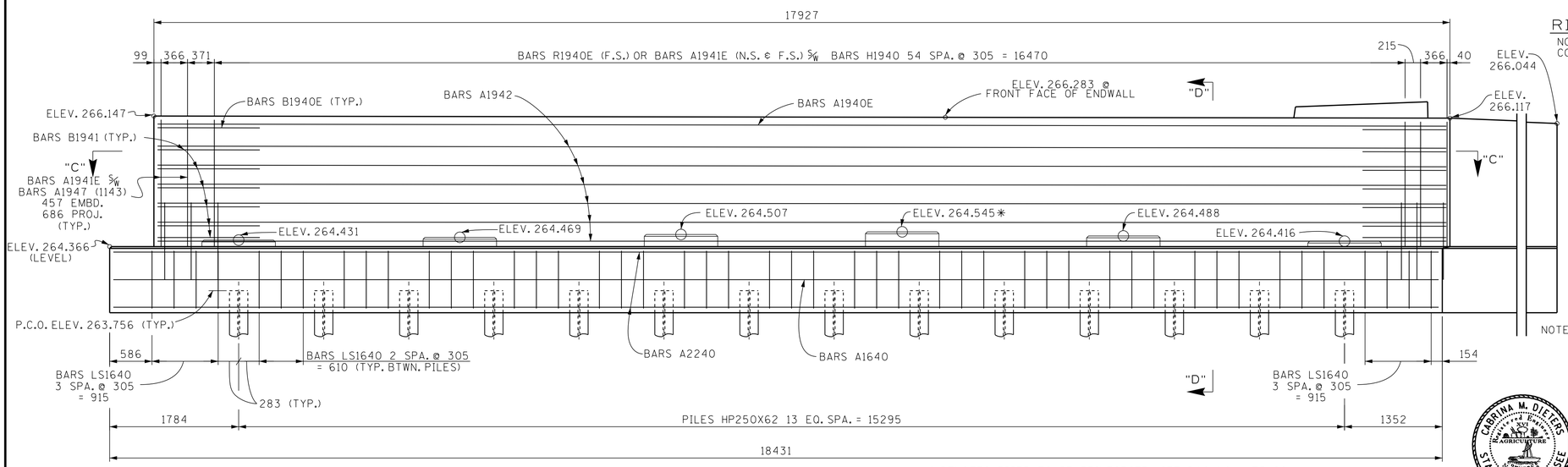


ELEVATION

(LOOKING FORWARD ON SURVEY)

P.C.O. DENOTES: PILE CUT-OFF

F.S. DENOTES: FAR SIDE
N.S. DENOTES: NEAR SIDE

* DENOTES: RISER TO BE REINFORCED. SEE DWG. NO. U-73-66 FOR RISER BLOCK REINFORCING DETAIL.

ESTIMATED QUANTITIES

| CONCRETE CLASS "A" M3 | EPOXY COATED REINFORCING KG | REINFORCING STEEL KG |
|---|---|---|
| 55 | 1089 | 3345 |

DIVISION OF STRUCTURES METRIC

NOTE: ALL DIMENSIONS SHOWN IN MILLIMETERS, WITH THE EXCEPTION OF STATIONS AND ELEVATIONS, UNLESS OTHERWISE NOTED.

STATE OF TENNESSEE
DEPARTMENT OF TRANSPORTATION

BRIDGE NO. 1
ABUTMENT NO. 2
MALONEY ROAD
OVER
STATE ROUTE 115
STATION 1+269.563
KNOX COUNTY
2015

CARRINA M. DIETERS — STATE OF TENNESSEE — DIVISION OF AGRICULTURE

CORRECT Wayne G. Sieger
ENGINEER OF STRUCTURES

| | | | |
|---|---|---|---|
| DESIGNED BY | ADAM PRICE | DATE | 12-14 |
| DRAWN BY | CHRIS STAPLER | DATE | 06-15 |
| SUPERVISED BY | C.M.D./J.W.F. | DATE | 06-15 |
| CHECKED BY | ADAM PRICE | DATE | 09-15 |

U-73-65

AB1133F.DGN

CONST. NO. 47026-3279-14

| PROJECT NO. | YEAR | SHEET NO. |
|---|---|---|
| NH-115(54) | 2015 | |

REVISIONS

| NO. | DATE | BY | BRIEF DESCRIPTION |
|---|---|---|---|
| | | | |

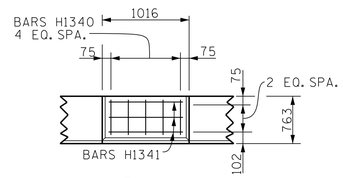


PLAN

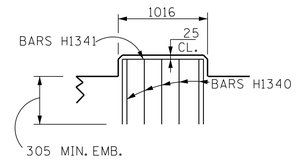


ELEVATION

RISER BLOCK REINFORCING DETAIL

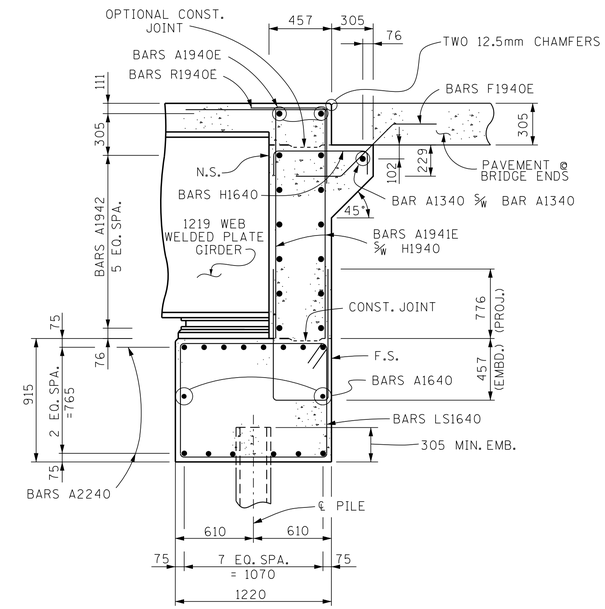


SECTION "D"-"D"

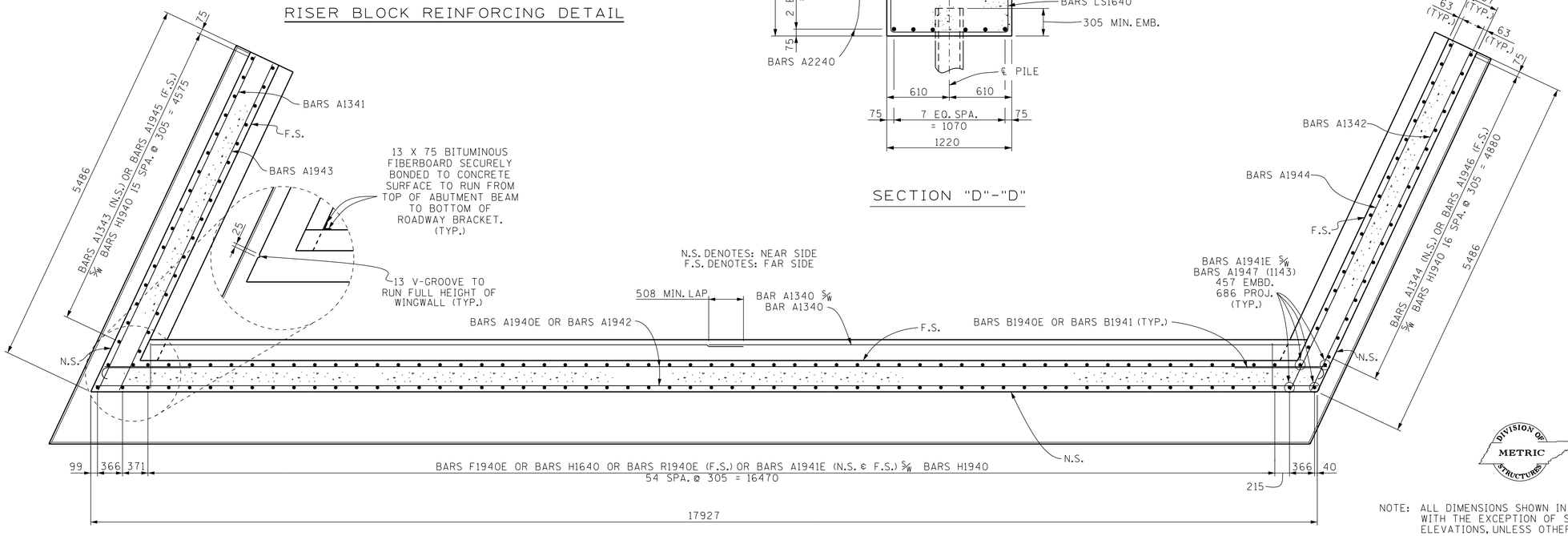


SECTION "C"-"C"

NOTE: ALL DIMENSIONS SHOWN IN MILLIMETERS, WITH THE EXCEPTION OF STATIONS AND ELEVATIONS, UNLESS OTHERWISE NOTED.

STATE OF TENNESSEE
DEPARTMENT OF TRANSPORTATION

BRIDGE NO. 1
ABUTMENT NO. 2 DETAILS
MALONEY ROAD
OVER
STATE ROUTE 115
STATION 1+269.563
KNOX COUNTY
2015

CORRECT _____ ENGINEER OF STRUCTURES

| | | | |
|---|---|---|---|
| DESIGNED BY | ADAM PRICE | DATE | 12-14 |
| DRAWN BY | CHRIS STAPLER | DATE | 06-15 |
| SUPERVISED BY | C.M.D./J.W.F. | DATE | 06-15 |
| CHECKED BY | ADAM PRICE | DATE | 09-15 |

U-73-66

AB1133F.DGN

CONST. NO. 47026-3279-14

| PROJECT NO. | YEAR | SHEET NO. |
|---|---|---|
| NH-115(54) | 2015 | |

REVISIONS

| NO. | DATE | BY | BRIEF DESCRIPTION |
|---|---|---|---|
| | | | |

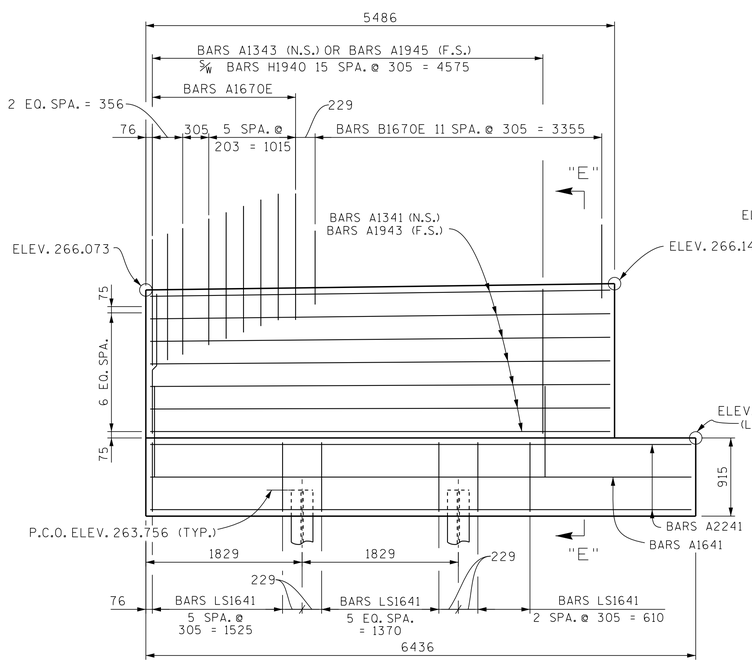


ELEVATION "A"-"A"

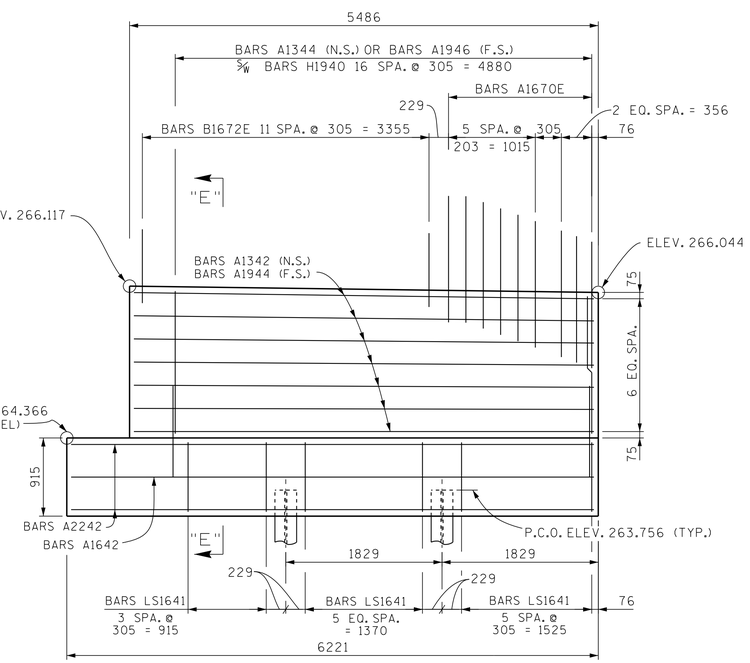


ELEVATION "B"-"B"

N.S. DENOTES: NEAR SIDE
F.S. DENOTES: FAR SIDE

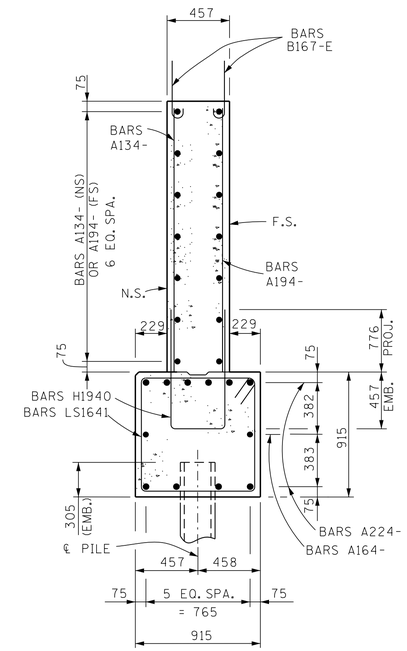


SECTION "E"-"E"

NOTE: ALL DIMENSIONS SHOWN IN MILLIMETERS, WITH THE EXCEPTION OF STATIONS AND ELEVATIONS, UNLESS OTHERWISE NOTED.

STATE OF TENNESSEE
DEPARTMENT OF TRANSPORTATION

BRIDGE NO. 1
ABUTMENT NO. 2 DETAILS
MALONEY ROAD
OVER
STATE ROUTE 115
STATION 1+269.563
KNOX COUNTY
2015

CORRECT _____ ENGINEER OF STRUCTURES

DESIGNED BY ADAM PRICE DATE 12-14
DRAWN BY CHRIS STAPLER DATE 06-15
SUPERVISED BY C.M.D./J.W.F. DATE 06-15
CHECKED BY ADAM PRICE DATE 09-15

U-73-67

AB1133F.DGN

CONST. NO. 47026-3279-14

| PROJECT NO. | YEAR | SHEET NO. |
|---|---|---|
| NH-115(54) | 2015 | |

REVISIONS

| NO. | DATE | BY | BRIEF DESCRIPTION |
|---|---|---|---|
| | | | |

NOTE: ELASTOMER: SHORE "A" HARDNESS = 60
SHEAR MODULUS @ 23° C: 896 kPa MIN.
1379 kPa MAX.

NOTE: USE ASTM A709M GRADE 345 STEEL UNLESS OTHERWISE NOTED.

NOTE: ANCHOR BOLTS SHALL BE GALVANIZED ACCORDING TO ASTM F2329 OR MECHANICALLY GALVANIZED TO ASTM B695.

NOTE: ALL EXPOSED SURFACES OF ASSEMBLED BEARING DEVICES TO BE PAINTED UTILIZING THE FOLLOWING PAINT: INORGANIC ZINC WITH URETHANE FINISH BROWN TOP COAT CONFORMING TO FEDERAL STANDARD 595C (20059).

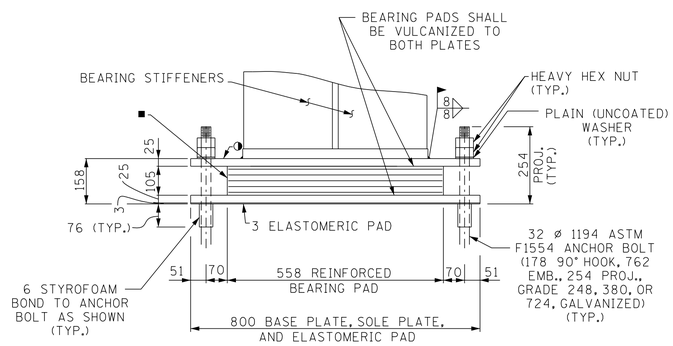


ELEVATION

◑ DENOTES: 25 X 406 X 800 SOLE PLATE

■ DENOTES: REINFORCED ELASTOMERIC BEARING CONSISTING OF:
FOUR - 19 THICK INTERNAL LAYERS OF ELASTOMER
TWO - 6 THICK COVER LAYERS OF ELASTOMER
FIVE - 3 THICK GRADE 250 STEEL REINF. LAYERS

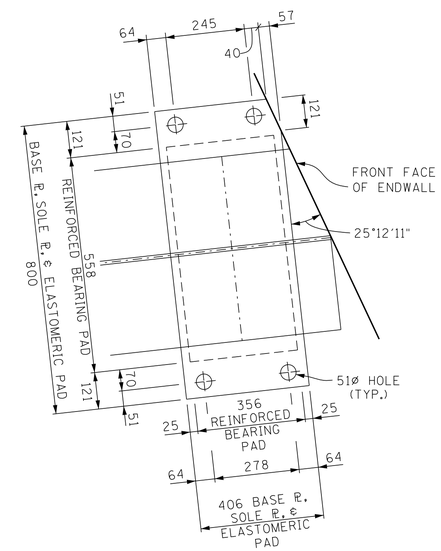


PLAN

# BEARING DEVICE DETAILS

NOTE: ALL DIMENSIONS SHOWN IN MILLIMETERS, WITH THE EXCEPTION OF STATIONS AND ELEVATIONS, UNLESS OTHERWISE NOTED.

STATE OF TENNESSEE
DEPARTMENT OF TRANSPORTATION
BRIDGE NO. 1
ABUTMENT NO. 2 DETAILS
MALONEY ROAD
OVER
STATE ROUTE 115
STATION 1+269.563
KNOX COUNTY
2015

CORRECT _____ ENGINEER OF STRUCTURES

| | | | |
|---|---|---|---|
| DESIGNED BY | ADAM PRICE | DATE | 12-14 |
| DRAWN BY | CHRIS STAPLER | DATE | 06-15 |
| SUPERVISED BY | C.M.D./J.W.F. | DATE | 06-15 |
| CHECKED BY | ADAM PRICE | DATE | 09-15 |

U-73-68

AB1133.DGN

CONST. NO. 47026-3279-14

| PROJECT NO. | YEAR | SHEET NO. |
|---|---|---|
| NH-115(54) | 2015 | |

REVISIONS

| NO. | DATE | BY | BRIEF DESCRIPTION |
|---|---|---|---|
| | | | |

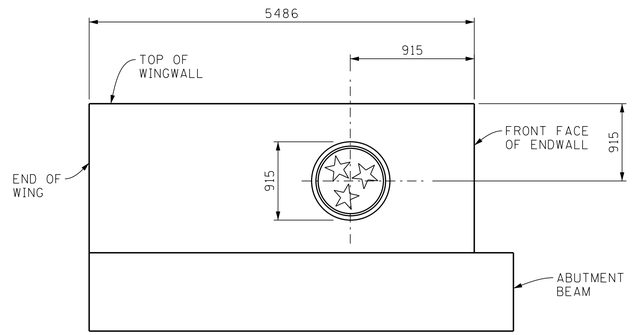


ABUTMENT TREATMENT

(WINGWALL ELEVATION)

(TYP. @ OUTSIDE FACE - ALL WINGWALLS)

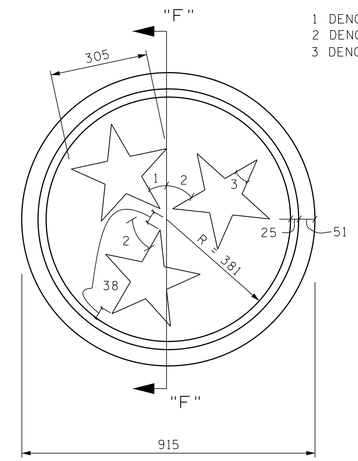


ARCHITECTURAL TREATMENT
3 STAR SYMBOL FORM DETAIL

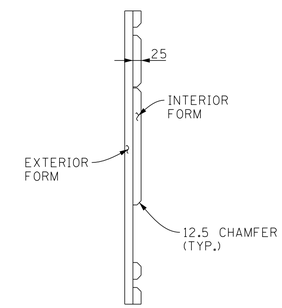


SECTION "F"-"F"

NOTES:

STATE SYMBOL TO BE "EMBOSSED" INTO THE CONCRETE.

STATE SYMBOL IS TO BE PAINTED.

PAINTING STATE SEAL:

THE STATE SEAL SHALL BE PAINTED WITH THE FOLLOWING PAINTS OR APPROVED EQUAL. IF THE CONTRACTOR ELECTS USE OF AN APPROVED EQUAL PAINT FROM A DIFFERENT COMPANY, IT SHALL BE A MARINE ACRYLIC GLASS PAINT WITH A SIMILAR COLOR AND PAINT PROPERTIES. A COLOR SAMPLE SHALL BE SUBMITTED TO THE ENGINEER FOR APPROVAL. THE COST OF THE PREPARATION OF SURFACES, PAINT, SEALER, SEALING THE PAINTED SURFACES, AND ALL LABOR REQUIRED FOR PAINTING THE STATE SEAL SHALL BE INCLUDED IN ITEMS BID ON.

| | |
|---|---|
| RED | SHERWIN WILLIAMS SHER-CRYL HPA HIGH PERFORMANCE ACRYLIC GLOSS "SAFETY RED"<br>B66 R300<br>6403-31922 |
| WHITE | SHERWIN WILLIAMS SHER-CRYL HPA HIGH PERFORMANCE ACRYLIC GLASS "FLAG WHITE"<br>B66 T304<br>6401-74215 |
| BLUE | SHERWIN WILLIAMS SHER-CRYL HPA HIGH PERFORMANCE ACRYLIC GLASS "FLAG BLUE"<br>B66 T304<br>6401-74215 |
| CLEAR COAT | WATERBORNE ACRYLIC CLEAR COAT CLEAR GLOSS<br>B66 C 375<br>6403-60111 |

N.S. DENOTES: NEAR SIDE
F.S. DENOTES: FAR SIDE

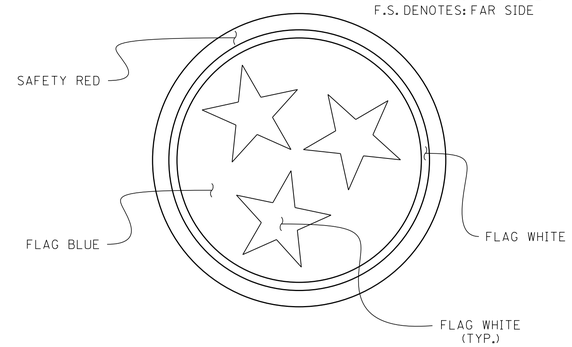


PAINTING DETAIL
LOCATION OF COLORS

NOTE: ALL DIMENSIONS SHOWN IN MILLIMETERS, WITH THE EXCEPTION OF STATIONS AND ELEVATIONS, UNLESS OTHERWISE NOTED.

STATE OF TENNESSEE
DEPARTMENT OF TRANSPORTATION
BRIDGE NO. 1
DECORATIVE SURFACE FINISH
AT ABUTMENTS
MALONEY ROAD
OVER
STATE ROUTE 115
STATION 1+269.563
KNOX COUNTY
2015

DESIGNED BY ADAM PRICE DATE 07-15
DRAWN BY CHRIS STAPLER DATE 07-15
SUPERVISED BY BIRDWELL/DIETERS DATE 07-15
CHECKED BY ADAM PRICE DATE 09-15

CORRECT Wayne G. Sieger
ENGINEER OF STRUCTURES

U-73-69

BP1133F.DGN

CONST. NO. 47026-3279-14

| PROJECT NO. | YEAR | SHEET NO. |
|---|---|---|
| NH-115(54) | 2015 | |

REVISIONS

| NO. | DATE | BY | BRIEF DESCRIPTION |
|---|---|---|---|
| | | | |

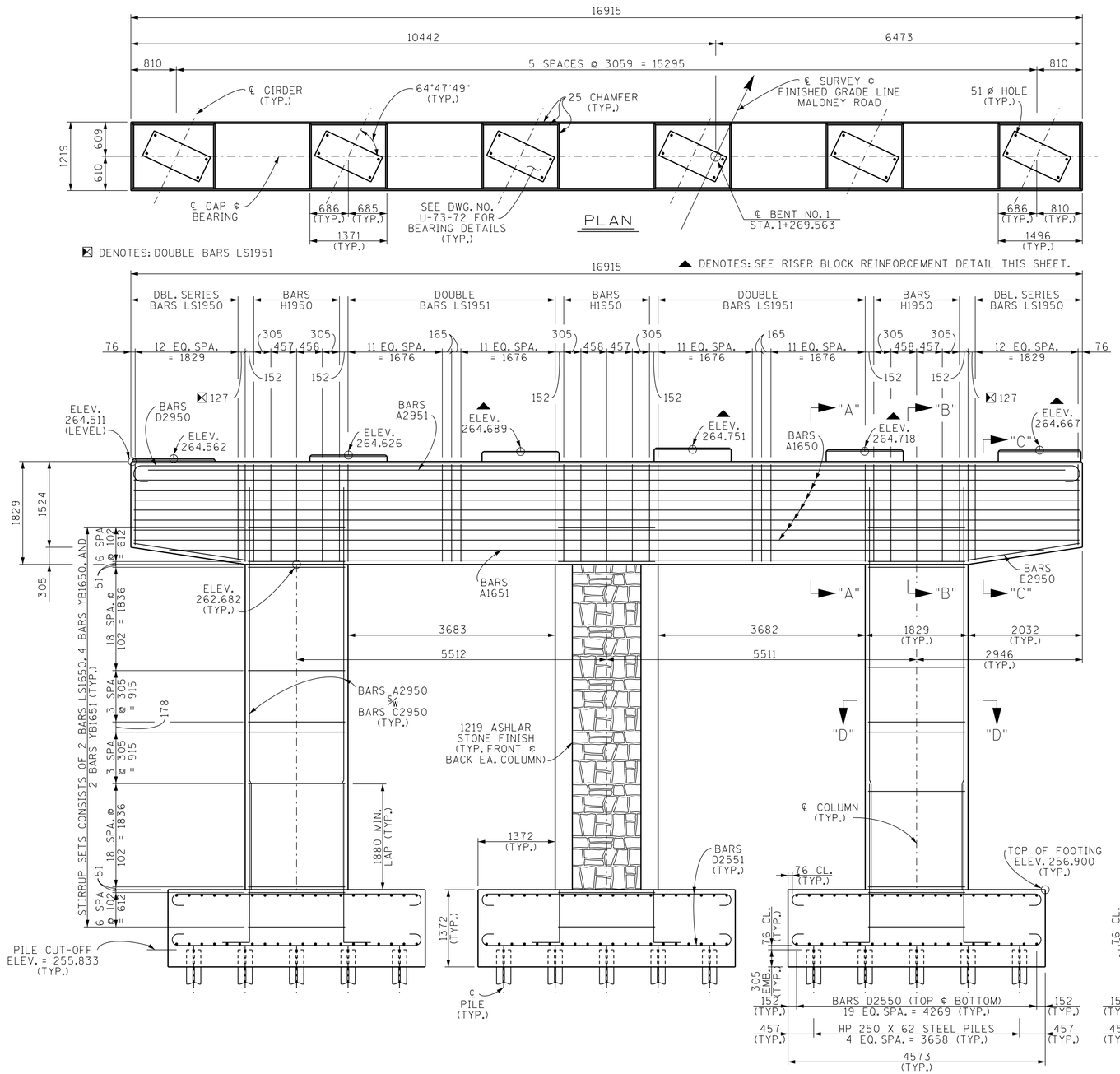


ELEVATION

(LOOKING FORWARD ON SURVEY)

END ELEVATION

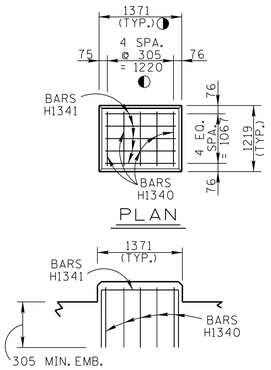


RISER BLOCK REINFORCING

DENOTES: 1496 FOR GIRDER NO. 6 RISER BLOCK

DENOTES: 5 EQ. SPA. = 1345 FOR GIRDER NO. 6 RISER BLOCK

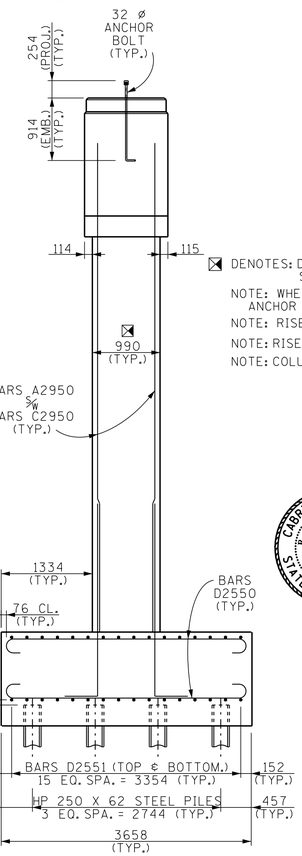


DENOTES: DIMENSION INCLUDES 38MM OF ASHLAR STONE FINISH ON EACH SIDE.

NOTE: WHEN POURING CAP BEAM, PROVISIONS SHALL BE MADE FOR SETTING ANCHOR BOLTS. BOLT PROJECTION 254.

NOTE: RISER BLOCKS TO BE POURED MONOLITHICALLY WITH CAP BEAM.

NOTE: RISER BLOCK BEARING PAD SURFACE SHALL BE LEVEL.

NOTE: COLUMN STEEL TO EXTEND 1372 INTO CAP BEAM.

| ESTIMATED QUANTITIES | |
|---|---|
| CLASS "A" CONCRETE (BRIDGES) M3 | REINFORCING STEEL (BRIDGES) KG. |
| 139 | 16988 |

CABRINA M. DIETERS — STATE OF TENNESSEE — REGISTERED ENGINEER — AGRICULTURE

DIVISION OF METRIC STRUCTURES

NOTE: ALL DIMENSIONS SHOWN IN MILLIMETERS, WITH THE EXCEPTION OF STATIONS AND ELEVATIONS, UNLESS OTHERWISE NOTED.

STATE OF TENNESSEE
DEPARTMENT OF TRANSPORTATION

BRIDGE NO. 1
BENT NO. 1
MALONEY ROAD
OVER
STATE ROUTE 115
STATION 1+269.563
KNOX COUNTY
2015

| | | | |
|---|---|---|---|
| DESIGNED BY | ADAM PRICE | DATE | 1-15 |
| DRAWN BY | T. KIRK | DATE | 6-15 |
| SUPERVISED BY | FIELDS ℄ DIETERS | DATE | 6-15 |
| CHECKED BY | ADAM PRICE | DATE | 9-15 |

CORRECT Wayne J. Sieger
ENGINEER OF STRUCTURES

U-73-70

BP1133F.DGN

CONST. NO. 47026-3279-14

| PROJECT NO. | YEAR | SHEET NO. |
|---|---|---|
| NH-115(54) | 2015 | |

REVISIONS

| NO. | DATE | BY | BRIEF DESCRIPTION |
|---|---|---|---|
| | | | |

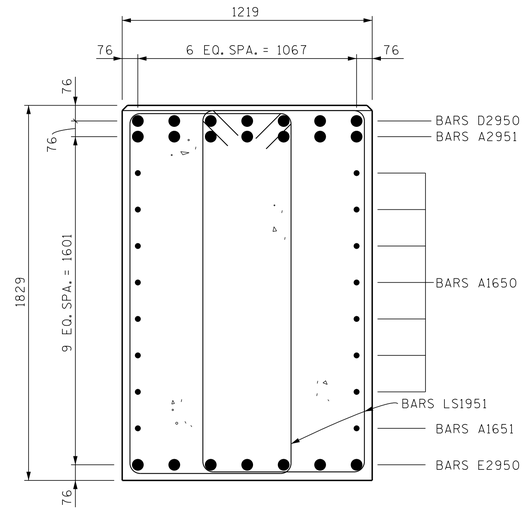


SECTION "A"-"A"

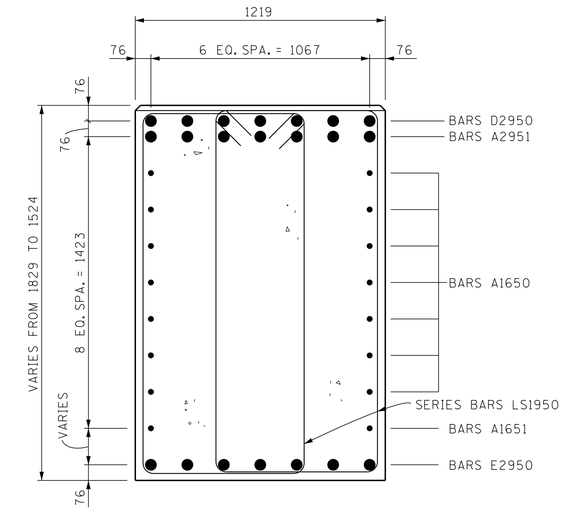


SECTION "C"-"C"

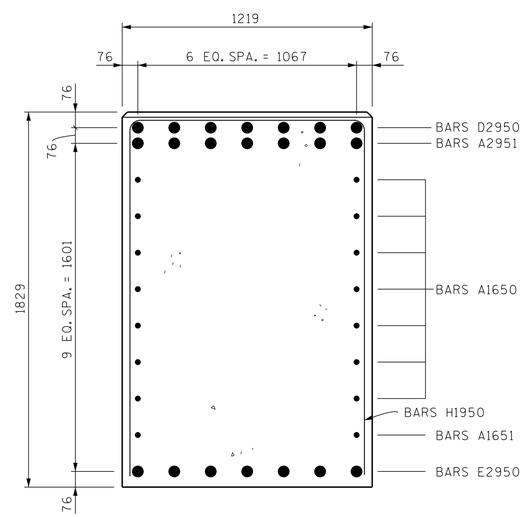


SECTION "B"-"B"

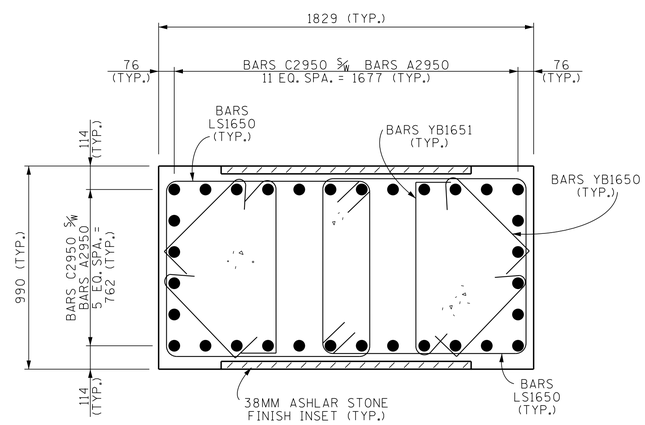


SECTION "D"-"D"

DIVISION OF METRIC STRUCTURES

NOTE: ALL DIMENSIONS SHOWN IN MILLIMETERS, WITH THE EXCEPTION OF STATIONS AND ELEVATIONS, UNLESS OTHERWISE NOTED.

STATE OF TENNESSEE
DEPARTMENT OF TRANSPORTATION

BRIDGE NO. 1
BENT NO. 1 DETAILS
MALONEY ROAD
OVER
STATE ROUTE 115
STATION 1+269.563
KNOX COUNTY
2015

CABRINA M. DIETERS — STATE OF TENNESSEE

CORRECT Wayne J. Tapp
ENGINEER OF STRUCTURES

| | | | |
|---|---|---|---|
| DESIGNED BY | ADAM PRICE | DATE | 1-15 |
| DRAWN BY | T. KIRK | DATE | 6-15 |
| SUPERVISED BY | FIELDS & DIETERS | DATE | 6-15 |
| CHECKED BY | ADAM PRICE | DATE | 9-15 |

U-73-71

BP1133F.DGN

CONST. NO. 47026-3279-14

| PROJECT NO. | YEAR | SHEET NO. |
|---|---|---|
| NH-115(54) | 2015 | |

REVISIONS

| NO. | DATE | BY | BRIEF DESCRIPTION |
|---|---|---|---|
| | | | |

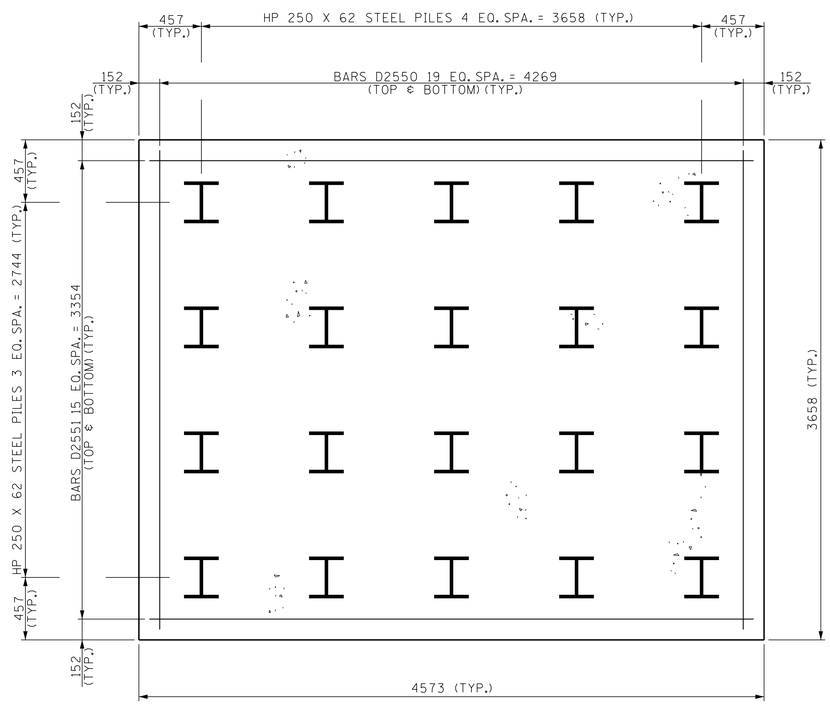


PLAN OF FOOTING

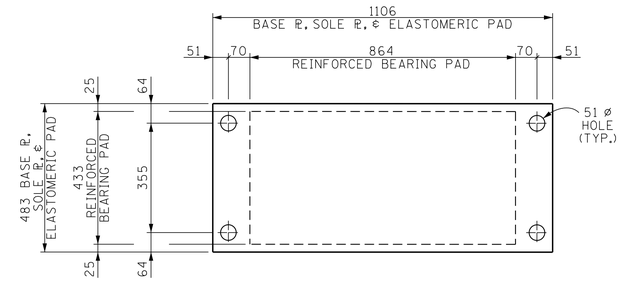


PLAN

◑ DENOTES: 25 X 483 X 1106 SOLE PLATE

■ DENOTES: REINFORCED ELASTOMERIC BEARING CONSISTS OF:
FOUR - 19 THICK INTERNAL LAYERS OF ELASTOMER
TWO - 6 THICK COVER LAYERS OF ELASTOMER
FIVE - 3 THICK GRADE 250 STEEL REINF. LAYERS

BEARING PADS SHALL BE VULCANIZED TO BOTH PLATES (TYP.)

NOTE: ELASTOMER: SHORE "A" HARDNESS = 60
SHEAR MODULUS @ 23° C: 896 KPA MIN.
1379 KPA MAX.

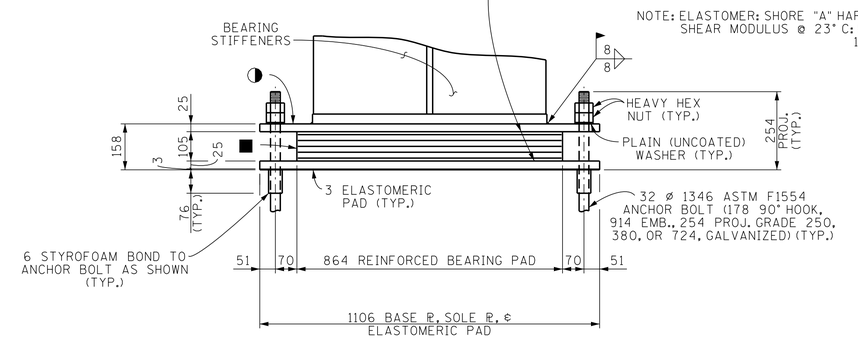


ELEVATION

BEARING DEVICE DETAIL AT BENT

NOTE: USE ASTM A709M GRADE 345 STEEL UNLESS OTHERWISE NOTED.

NOTE: ANCHOR BOLTS SHALL BE GALVANIZED ACCORDING TO ASTM F2329 OR MECHANICALLY GALVANIZED TO ASTM B695.

NOTE: ALL EXPOSED SURFACES OF ASSEMBLED BEARING DEVICES TO BE PAINTED UTILIZING THE FOLLOWING PAINT: INORGANIC ZINC WITH URETHANE FINISH BROWN TOP COAT CONFORMING TO FEDERAL STANDARDS 595C (30059).

DIVISION OF METRIC STRUCTURES

NOTE: ALL DIMENSIONS SHOWN IN MILLIMETERS, WITH THE EXCEPTION OF STATIONS AND ELEVATIONS, UNLESS OTHERWISE NOTED.

CABRINA M. DIETERS
STATE OF TENNESSEE

STATE OF TENNESSEE
DEPARTMENT OF TRANSPORTATION

BRIDGE NO. 1
BENT NO. 1 DETAILS
MALONEY ROAD
OVER
STATE ROUTE 115
STATION 1+269.563
KNOX COUNTY
2015

CORRECT Wayne G. Seger
ENGINEER OF STRUCTURES

| | | | |
|---|---|---|---|
| DESIGNED BY | ADAM PRICE | DATE | 1-15 |
| DRAWN BY | T. KIRK | DATE | 6-15 |
| SUPERVISED BY | FIELDS & DIETERS | DATE | 6-15 |
| CHECKED BY | ADAM PRICE | DATE | 9-15 |

U-73-72

BP1133F.DGN

CONST. NO. 47026-3279-14

| PROJECT NO. | YEAR | SHEET NO. |
|---|---|---|
| NH-115(54) | 2015 | |

REVISIONS

| NO. | DATE | BY | BRIEF DESCRIPTION |
|---|---|---|---|
| | | | |

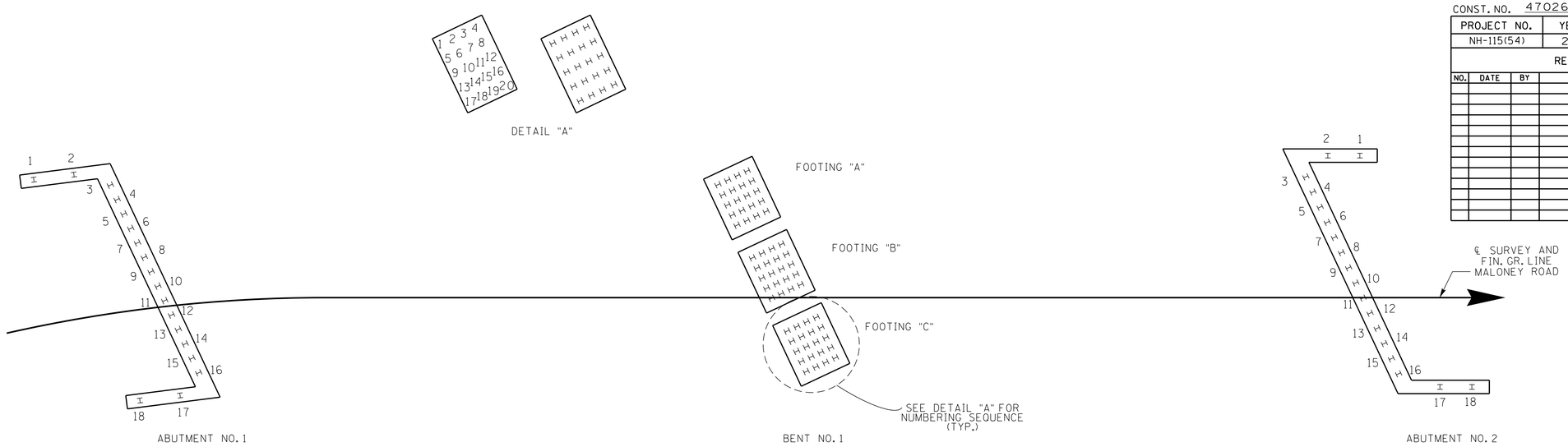


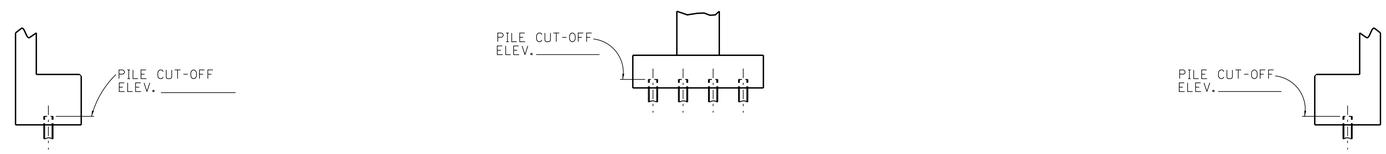


ABUTMENT NO. 1 BENT NO. 1 ABUTMENT NO. 2

NOTE: TO CONTRACTOR AND CONSTRUCTION OFFICE:
THE BLANKS ON THIS SHEET ARE TO BE FILLED IN BY THE CONSTRUCTION OFFICE AND/OR FIELD ENGINEER GIVING AS-BUILT CONDITIONS. AFTER COMPLETION IT IS TO BE SENT TO THE DIVISION OF STRUCTURES TO BECOME PART OF FINAL BRIDGE DOCUMENTS.

TABLE SHOWING PILE NUMBERS, PILE CUT-OFF ELEVATIONS, AND PILE LENGTHS

| | | 1 | 2 | 3 | 4 | 5 | 6 | 7 | 8 | 9 | 10 | 11 | 12 | 13 | 14 | 15 | 16 | 17 | 18 | 19 | 20 |
|---|---|---|---|---|---|---|---|---|---|---|---|---|---|---|---|---|---|---|---|---|---|
| ABUTMENT NO.1 | PILE CUT-OFF ELEV. | | | | | | | | | | | | | | | | | | | | |
| | PILE TIP ELEV. | | | | | | | | | | | | | | | | | | | | |
| | IN PLACE PILE LENGTH | | | | | | | | | | | | | | | | | | | | |
| BENT NO. 1 FTG. "A" | PILE CUT-OFF ELEV. | | | | | | | | | | | | | | | | | | | | |
| | PILE TIP ELEV. | | | | | | | | | | | | | | | | | | | | |
| | IN PLACE PILE LENGTH | | | | | | | | | | | | | | | | | | | | |
| BENT NO. 1 FTG. "B" | PILE CUT-OFF ELEV. | | | | | | | | | | | | | | | | | | | | |
| | PILE TIP ELEV. | | | | | | | | | | | | | | | | | | | | |
| | IN PLACE PILE LENGTH | | | | | | | | | | | | | | | | | | | | |
| BENT NO. 1 FTG. "C" | PILE CUT-OFF ELEV. | | | | | | | | | | | | | | | | | | | | |
| | PILE TIP ELEV. | | | | | | | | | | | | | | | | | | | | |
| | IN PLACE PILE LENGTH | | | | | | | | | | | | | | | | | | | | |
| ABUTMENT NO.2 | PILE CUT-OFF ELEV. | | | | | | | | | | | | | | | | | | | | |
| | PILE TIP ELEV. | | | | | | | | | | | | | | | | | | | | |
| | IN PLACE PILE LENGTH | | | | | | | | | | | | | | | | | | | | |

DIVISION OF STRUCTURES METRIC

NOTE: ALL DIMENSIONS SHOWN IN MILLIMETERS, WITH THE EXCEPTION OF STATIONS AND ELEVATIONS, UNLESS OTHERWISE NOTED.

STATE OF TENNESSEE
DEPARTMENT OF TRANSPORTATION

BRIDGE NO. 1
FINAL FOUNDATION DATA
MALONEY ROAD
OVER
STATE ROUTE 115
STATION 1+269.563
KNOX COUNTY
2015

DESIGNED BY ADAM PRICE DATE 1-15
DRAWN BY T. KIRK DATE 6-15
SUPERVISED BY FIELDS & DIETERS DATE 6-15
CHECKED BY ADAM PRICE DATE 9-15

CORRECT Wayne G. Sieger
ENGINEER OF STRUCTURES

U-73-73

BS1133F.DGN

# BILL OF STEEL

## SUPERSTRUCTURE EPOXY

| BAR | LOCATION | SIZE | NO. REQ'D | BENDING DIMENSIONS A | B | C | D | LENGTH |
|---|---|---|---|---|---|---|---|---|
| A1610E | SIDEWALK | 16 | 1 | | | | | 954 |
| A1611E | SIDEWALK | 16 | 317 | | | | | 1673 |
| A1612E | SIDEWALK | 16 | 1 | | | | | 1311 |
| A1613E | SIDEWALK | 16 | 1 | | | | | 662 |
| A1614E | SIDEWALK | 16 | 7 | | | | | 3830 |
| A1615E | SIDEWALK | 16 | 77 | | | | | 9144 |
| A1900E | SLAB | 19 | 268 | | | | | 18288 |
| A1901E | SLAB | 19 | 52 | | | | | 9144 |
| A1902E | SLAB | 19 | 52 | | | | | 10363 |
| A1903E | SLAB | 19 | 54 | | | | | 12802 |
| A1904E | SLAB | 19 | 738 | | | | | 9144 |
| A1905E | SLAB | 19 | 82 | | | | | 7537 |
| SERIES A1906E | SLAB | 19 | 2 | LENGTH VARIES FROM 1827 TO 16118 IN INC. OF 461 (32 BARS) | | | | 287120 |
| SERIES A1907E | SLAB | 19 | 2 | LENGTH VARIES FROM 15960 TO 1425 IN INC. OF 323 (46 BARS) | | | | 399855 |
| A1908E | SLAB | 19 | 998 | | | | | 16118 |
| B1670E | SLAB | 16 | 272 | 635 | | | | 813 |
| B1672E | SLAB | 16 | 273 | 838 | | | | 1016 |

## ABUTMENT NO. 1 (EPOXY)

| BAR | LOCATION | SIZE | NO. REQ'D | BENDING DIMENSIONS A | B | C | D | LENGTH |
|---|---|---|---|---|---|---|---|---|
| A1670E | WING WALLS | 16 | 36 | | | | | 1480 |
| A1940E | ENDWALL | 19 | 2 | | | | | 16982 |
| A1941E | ENDWALL | 19 | 8 | | | | | 1710 |
| SERIES A1943E | ENDWALL | 19 | 2 | LENGTH VARIES FROM 1725 TO 2060 IN INCS OF 6.5 (53 BARS) | | | | 100303 |
| B1670E | WING WALLS | 16 | 24 | 838 | | | | 1016 |
| B1672E | WING WALLS | 16 | 24 | 1067 | | | | 1245 |
| B1940E | ENDWALL | 19 | 2 | 1525 | | | | 1727 |
| F1940E | ENDWALL | 19 | 53 | 330 | 381 | 330 | 381 | 1194 |
| R1940E | ENDWALL | 19 | 53 | 991 | 897 | | | 1888 |

## ABUTMENT NO. 1 (NON-EPOXY)

| BAR | LOCATION | SIZE | NO. REQ'D | BENDING DIMENSIONS A | B | C | D | LENGTH |
|---|---|---|---|---|---|---|---|---|
| A1340 | ROADWAY BRACKET | 13 | 2 | | | | | 8263 |
| A1341 | WING WALLS | 13 | 8 | | | | | 5359 |
| A1342 | WING WALLS | 13 | 8 | | | | | 5408 |
| A1343 | WING WALLS | 13 | 16 | | | | | 1462 |
| A1344 | WING WALLS | 13 | 17 | | | | | 1954 |
| A1640 | ABUTMENT BEAM | 16 | 2 | | | | | 17461 |
| A1641 | WING BEAM | 16 | 2 | | | | | 5973 |
| A1642 | WING BEAM | 16 | 2 | | | | | 6121 |
| A1942 | ENDWALL | 19 | 14 | | | | | 16982 |
| A1943 | WING BEAM | 19 | 8 | | | | | 5260 |
| A1944 | WING BEAM | 19 | 8 | | | | | 5507 |
| A1945 | WING BEAM | 19 | 16 | | | | | 1462 |
| A1946 | WING BEAM | 19 | 17 | | | | | 1954 |
| A1947 | ABUTMENT BEAM/ENDWALL | 19 | 8 | | | | | 1426 |
| A2240 | ABUTMENT BEAM | 22 | 14 | | | | | 17461 |
| A2241 | WING BEAM | 22 | 10 | | | | | 5973 |
| A2242 | WING BEAM | 22 | 10 | | | | | 6121 |
| B1941 | ENDWALL | 19 | 14 | 1525 | | | | 1727 |
| H1340 | RISERS | 13 | 15 | 637 | 633 | | | 1903 |
| H1341 | RISERS | 13 | 9 | 1068 | 633 | | | 2334 |
| H1640 | ENDWALL | 16 | 53 | 660 | 152 | | | 964 |
| H1940 | E.W. / W.W. / W.B. / A.B. | 19 | 86 | 357 | 1315 | | | 2987 |
| LS1640 | ABUTMENT BEAM | 16 | 47 | 1120 | 815 | | | 4150 |
| LS1641 | WING BEAMS | 16 | 32 | 815 | 815 | | | 3540 |

## ABUTMENT NO. 2 (EPOXY)

| BAR | LOCATION | SIZE | NO. REQ'D | BENDING DIMENSIONS A | B | C | D | LENGTH |
|---|---|---|---|---|---|---|---|---|
| A1670E | WINGWALLS | 16 | 36 | | | | | 1480 |
| A1940E | ENDWALL | 19 | 2 | | | | | 17827 |
| A1941E | ENDWALL | 19 | 118 | | | | | 1727 |
| B1670E | WINGWALLS | 16 | 24 | 838 | | | | 1016 |
| B1672E | WINGWALLS | 16 | 24 | 1067 | | | | 1245 |
| B1940E | ENDWALL | 19 | 2 | 1525 | | | | 1727 |
| F1940E | ENDWALL | 19 | 55 | 330 | 381 | 330 | 381 | 1194 |
| R1940E | ENDWALL | 19 | 55 | 991 | 897 | | | 1888 |

## ABUTMENT NO. 2 (NON-EPOXY)

| BAR | LOCATION | SIZE | NO. REQ'D | BENDING DIMENSIONS A | B | C | D | LENGTH |
|---|---|---|---|---|---|---|---|---|
| A1340 | ROADWAY BRAKCET | 13 | 2 | | | | | 8657 |
| A1341 | WINGWALLS | 13 | 7 | | | | | 5348 |
| A1342 | WINGWALLS | 13 | 7 | | | | | 5420 |
| A1343 | WINGWALLS | 13 | 16 | | | | | 1657 |
| A1344 | WINGWALLS | 13 | 17 | | | | | 1628 |
| A1640 | ABUTMENT BEAM | 16 | 2 | | | | | 18288 |
| A1641 | WING BEAM | 16 | 2 | | | | | 5944 |
| A1642 | WING BEAM | 16 | 2 | | | | | 6147 |
| A1942 | ENDWALL | 19 | 12 | | | | | 17827 |
| A1943 | WING BEAM | 19 | 7 | | | | | 5207 |
| A1944 | WING BEAM | 19 | 7 | | | | | 5563 |
| A1945 | WING BEAM | 19 | 16 | | | | | 1657 |
| A1946 | WING BEAM | 19 | 17 | | | | | 1628 |
| A1947 | ABUTMENT BEAM/ENDWALL | 19 | 8 | | | | | 1143 |
| A2240 | ABUTMENT BEAM | 22 | 14 | | | | | 18288 |
| A2241 | WING BEAM | 22 | 10 | | | | | 5944 |
| A2242 | WING BEAM | 22 | 10 | | | | | 6147 |
| B1941 | ENDWALL | 19 | 12 | 1525 | | | | 1727 |
| H1340 | RISERS | 13 | 5 | 637 | 457 | | | 1551 |
| H1341 | RISERS | 13 | 3 | 915 | 457 | | | 1829 |
| H1640 | ENDWALL | 16 | 55 | 660 | 152 | | | 964 |
| H1940 | E.W. / W.W. / W.B. / A.B. | 19 | 88 | 357 | 1233 | | | 2823 |
| LS1640 | ABUTMENT BEAM | 16 | 47 | 1120 | 815 | | | 4150 |
| LS1641 | WING BEAMS | 16 | 31 | 815 | 815 | | | 3540 |

| BAR | LOCATION | SIZE | NO. REQ'D | BENDING DIMENSIONS A | B | C | D | LENGTH |
|---|---|---|---|---|---|---|---|---|

NOTE: BAR NUMBERS ARE REPEATED ON BILL OF STEEL FOR EACH SUBSTRUCTURE. THE SUPPLIER SHALL SHIP THE BARS TO THE JOB SITE WITH THE SUBSTRUCTURE DESIGNATION INCLUDED AS PART OF THE LABEL.

CONST. NO. 47026-3279-14

| PROJECT NO. | YEAR | SHEET NO. |
|---|---|---|
| NH-115(54) | 2015 | |

REVISIONS

| NO. | DATE | BY | BRIEF DESCRIPTION |
|---|---|---|---|
| | | | |

## REINFORCING STEEL CODE

| TYPE | SIZE | SERIES |
|---|---|---|
| A | 16 | 06 |

NOTE: DIMENSIONS SHOWN ON THIS SHEET ARE OUTSIDE TO OUTSIDE OF BAR. STANDARD C.R.S.I. HOOK DETAILS SHALL APPLY, EXCEPT AS NOTED.

NOTE: THE SUFFIX E FOR BARS SO MARKED DENOTES EPOXY COATED REINFORCEMENT.

BARS A

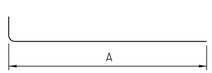


BARS C

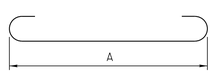


BARS D

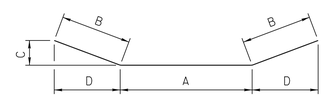


BARS E

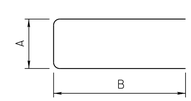


BARS H

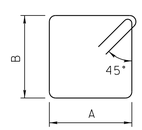


BARS LS

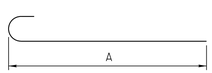


BARS B

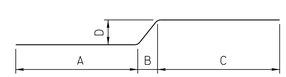


BARS F

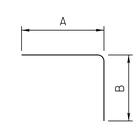


BARS R

NOTE: ALL DIMENSIONS SHOWN IN MILLIMETERS, WITH THE EXCEPTION OF STATIONS AND ELEVATIONS, UNLESS OTHERWISE NOTED.

STATE OF TENNESSEE
DEPARTMENT OF TRANSPORTATION

BRIDGE NO. 1
BILL OF STEEL
MALONEY ROAD
OVER
STATE ROUTE 115
STATION 1+269.563
KNOX COUNTY
2015

CORRECT _____ ENGINEER OF STRUCTURES

DESIGNED BY ADAM PRICE DATE 12-14
DRAWN BY CHRIS STAPLER DATE 09-15
SUPERVISED BY C.M.D./BIRDWELL DATE 09-15
CHECKED BY ADAM PRICE DATE 09-15

U-73-74

BS1133F.DGN

# BILL OF STEEL

## BENT NO. 1

| BAR | LOCATION | SIZE | NO. REQ'D | BENDING DIMENSIONS A | B | C | D | LENGTH |
|---|---|---|---|---|---|---|---|---|
| A1650 | CAP | 16 | 14 | | | | | 16814 |
| A1651 | CAP | 16 | 2 | | | | | 15554 |
| A2950 | COLUMN / CAP | 29 | 96 | | | | | 7154 |
| A2951 | CAP | 29 | 7 | | | | | 16510 |
| C2950 | FOOTING / COLUMN | 29 | 96 | 2820 | | | | 3303 |
| D2550 | FOOTING | 25 | 120 | 3505 | | | | 4064 |
| D2551 | FOOTING | 25 | 96 | 4421 | | | | 4980 |
| D2950 | CAP | 29 | 7 | 16813 | | | | 17575 |
| E2950 | CAP | 29 | 7 | 12841 | 2009 | 298 | 1987 | 16859 |
| H1340 | RISERS | 13 | 21 | 1117 | 494 | | | 2105 |
| H1341 | RISERS | 13 | 20 | 1269 | 494 | | | 2257 |
| H1950 | CAP | 19 | 15 | 1117 | 1727 | | | 4571 |
| LS1650 | COLUMN | 16 | 348 | 965 | 813 | | | 3835 |
| SERIES | | | | | | | | |
| LS1950 | CAP | 19 | 4 | 762 | * | | | 66664 |
| | | | | * DIM "B" VARIES FROM 1743 | | | | |
| | | | | TO 1455 IN INC OF 24 (13 BARS) | | | | |
| LS1951 | CAP | 19 | 104 | 762 | 1743 | | | 5416 |
| YB1650 | COLUMN | 16 | 696 | 495 | 153 | | | 928 |
| YB1651 | COLUMN | 16 | 348 | 829 | 153 | | | 1262 |

| BAR | LOCATION | SIZE | NO. REQ'D | BENDING DIMENSIONS A | B | C | D | LENGTH |
|---|---|---|---|---|---|---|---|---|

| BAR | LOCATION | SIZE | NO. REQ'D | BENDING DIMENSIONS A | B | C | D | LENGTH |
|---|---|---|---|---|---|---|---|---|

| BAR | LOCATION | SIZE | NO. REQ'D | BENDING DIMENSIONS A | B | C | D | LENGTH |
|---|---|---|---|---|---|---|---|---|

NOTE: BAR NUMBERS ARE REPEATED ON BILL OF STEEL FOR EACH SUBSTRUCTURE. THE SUPPLIER SHALL SHIP THE BARS TO THE JOB SITE WITH THE SUBSTRUCTURE DESIGNATION INCLUDED AS PART OF THE LABEL.

CONST. NO. 47026-3279-14

| PROJECT NO. | YEAR | SHEET NO. |
|---|---|---|
| NH-115(54) | 2015 | |

REVISIONS

| NO. | DATE | BY | BRIEF DESCRIPTION |
|---|---|---|---|
| | | | |

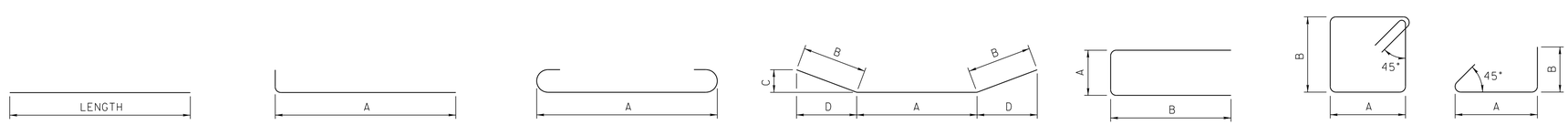


## REINFORCING STEEL CODE

| TYPE | SIZE | SERIES |
|---|---|---|
| A | 16 | 06 |

NOTE: DIMENSIONS SHOWN ON THIS SHEET ARE OUTSIDE TO OUTSIDE OF BAR. STANDARD C.R.S.I. HOOK DETAILS SHALL APPLY, EXCEPT AS NOTED.

NOTE: THE SUFFIX E FOR BARS SO MARKED DENOTES EPOXY COATED REINFORCEMENT.

DIVISION OF STRUCTURES METRIC

NOTE: ALL DIMENSIONS SHOWN IN MILLIMETERS, WITH THE EXCEPTION OF STATIONS AND ELEVATIONS, UNLESS OTHERWISE NOTED.

STATE OF TENNESSEE
DEPARTMENT OF TRANSPORTATION

BRIDGE NO. 1
BILL OF STEEL
MALONEY ROAD
OVER
STATE ROUTE 115
STATION 1+269.563
KNOX COUNTY
2015

CABRINA M. DIETERS — STATE OF TENNESSEE — 2/3/2015 — AGRICULTURE

CORRECT Wayne G. Sieger
ENGINEER OF STRUCTURES

DESIGNED BY ADAM PRICE DATE 12-14
DRAWN BY CHRIS STAPLER DATE 09-15
SUPERVISED BY C.M.D./BIRDWELL DATE 09-15
CHECKED BY ADAM PRICE DATE 09-15

U-73-75

LAY1137F.DGN

CONST. NO. 47026-3279-14

| PROJECT NO. | YEAR | SHEET NO. |
|---|---|---|
| NH-115(54) | 2015 | |

REVISIONS

| NO. | DATE | BY | BRIEF DESCRIPTION |
|---|---|---|---|
| | | | |

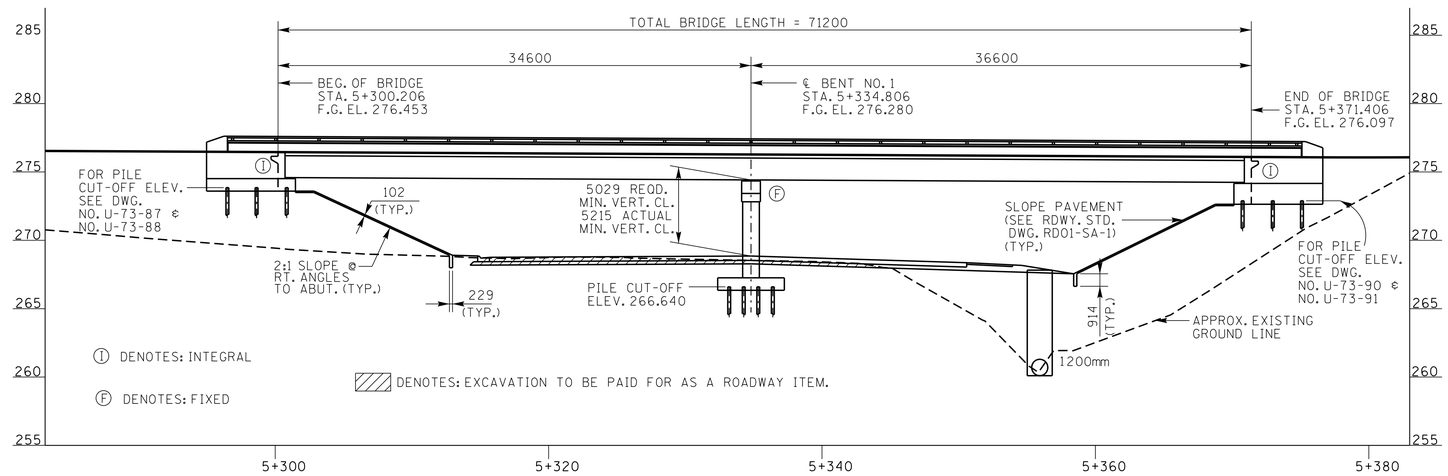


ELEVATION

(AT RT. ∠S TO ℄ SURVEY COLLECTOR NO. 3)
(SCALE: 1:12.5)

CURVE DATA
COLLECTOR NO. 5
PI 5+263.273
N 177,609.0951
E 784,606.6618
Δ 91° 07′ 00″ (LT)
R 60.000
Lc 95.417
T 61.181
E 25.692
S.E. 4.00%
TRANS. LENGTH 31
DESIGN SPEED 40km/h

CURVE DATA
COLLECTOR NO. 5
PI 5+381.701
N 177,658.7688
E 784,470.0393
Δ 24° 58′ 11″ (LT)
R 60.000
Lc 26.148
T 13.285
E 1.453
S.E. 4.00%
TRANS. LENGTH 31
DESIGN SPEED 40km/h

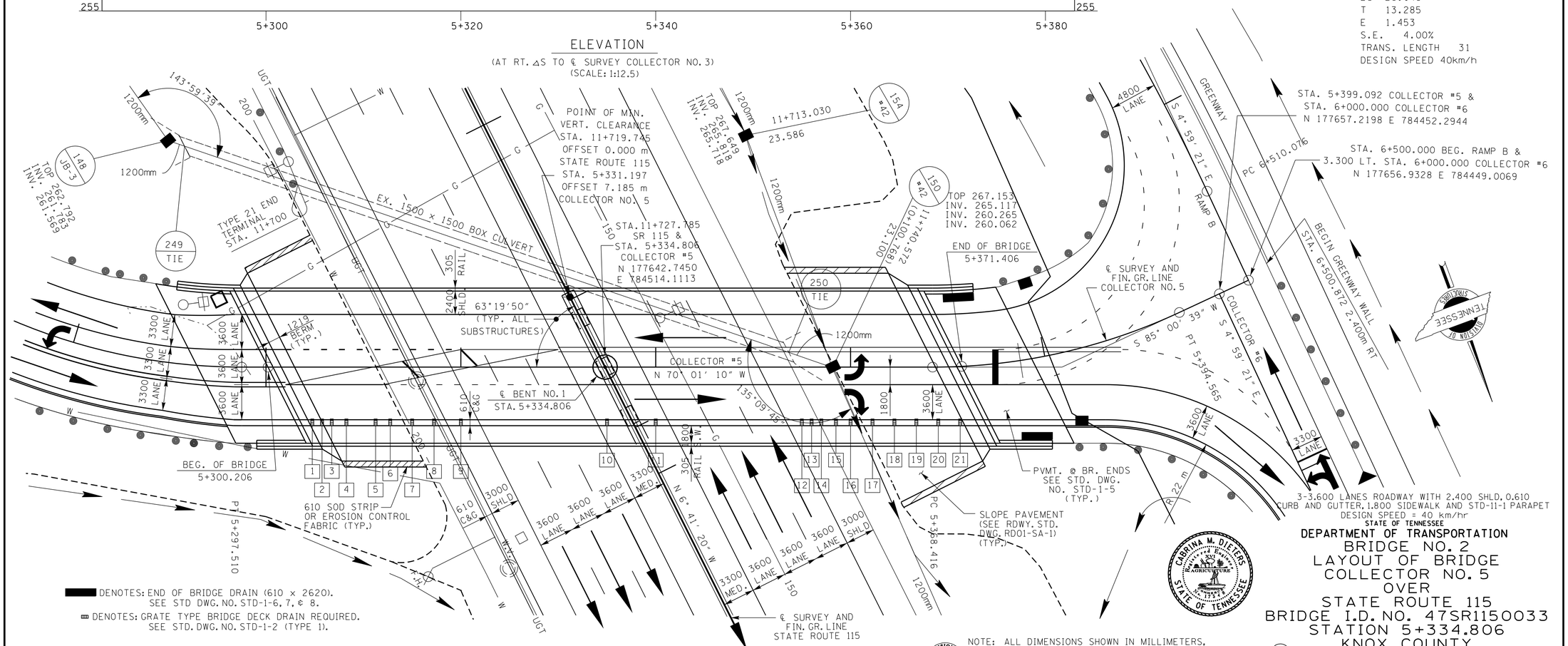


PLAN
(SCALE: 1:12.5)

STA. 5+399.092 COLLECTOR #5 &
STA. 6+000.000 COLLECTOR #6
N 177657.2198 E 784452.2944

STA. 6+500.000 BEG. RAMP B &
3.300 LT. STA. 6+000.000 COLLECTOR #6
N 177656.9328 E 784449.0069

3-3.600 LANES ROADWAY WITH 2.400 SHLD, 0.610 CURB AND GUTTER, 1.800 SIDEWALK AND STD-11-1 PARAPET
DESIGN SPEED = 40 km/hr

STATE OF TENNESSEE
DEPARTMENT OF TRANSPORTATION
BRIDGE NO. 2
LAYOUT OF BRIDGE
COLLECTOR NO. 5
OVER
STATE ROUTE 115
BRIDGE I.D. NO. 47SR1150033
STATION 5+334.806
KNOX COUNTY
2015

NOTE: ALL DIMENSIONS SHOWN IN MILLIMETERS, WITH THE EXCEPTION OF STATIONS AND ELEVATIONS, UNLESS OTHERWISE NOTED.

DIVISION OF STRUCTURES METRIC

CORRECT Wayne J. Seger
ENGINEER OF STRUCTURES

| | | | |
|---|---|---|---|
| DESIGNED BY | ALI OMAR | DATE | 08/15 |
| DRAWN BY | T. KIRK | DATE | 08/15 |
| SUPERVISED BY | BIRDWELL/DIETERS | DATE | 08/15 |
| CHECKED BY | C. DIETERS | DATE | 09/15 |

U-73-76

LAY1137F.DGN

CONST. NO. 47026-3279-14

| PROJECT NO. | YEAR | SHEET NO. |
|---|---|---|
| NH-115(54) | 2015 | |

REVISIONS

| NO. | DATE | BY | BRIEF DESCRIPTION |
|---|---|---|---|
| | | | |

## LIST OF DRAWINGS

| | DWG. NO. | LAST REV. DATE |
|---|---|---|
| LAYOUT OF BRIDGE | U-73-76 | |
| LAYOUT OF BRIDGE | U-73-77 | |
| GENERAL NOTES & ESTIMATED QUANTITIES | U-73-78 | |
| FOUNDATION DATA | U-73-79 | |
| FOUNDATION DATA | U-73-80 | |
| SUPERSTRUCTURE | U-73-81 | |
| SUPERSTRUCTURE DETAILS | U-73-82 | |
| SUPERSTRUCTURE DETAILS | U-73-83 | |
| SUPERSTRUCTURE DETAILS | U-73-84 | |
| PREST. BULB-TEE BEAM DETAILS SPAN NO. 1 | U-73-85 | |
| PREST. BULB-TEE BEAM DETAILS SPAN NO. 2 | U-73-86 | |
| ABUTMENT NO. 1 | U-73-87 | |
| ABUTMENT NO. 1 DETAILS | U-73-88 | |
| ABUTMENT NO. 1 DETAILS | U-73-89 | |
| ABUTMENT NO. 2 | U-73-90 | |
| ABUTMENT NO. 2 DETAILS | U-73-91 | |
| ABUTMENT NO. 2 DETAILS | U-73-92 | |
| DECORATIVE SURFACE FINISH AT ABUTMENTS | U-73-93 | |
| BENT NO. 1 | U-73-94 | |
| BENT NO. 1 DETAILS | U-73-95 | |
| FINAL FOUNDATION DATA | U-73-96 | |
| BILL OF STEEL | U-73-97 | |
| BILL OF STEEL | U-73-98 | |

## LIST OF STANDARD DRAWINGS

| | DWG. NO. | LAST REV. DATE |
|---|---|---|
| SLIDER PLATES AND DECK DRAINS | STD-1-2 | 3-28-08 |
| PAVEMENT AT BRIDGE ENDS | STD-1-5 | 3-26-14 |
| BRIDGE END DRAINS W/PABE | STD-1-6 | 4-28-97 |
| BRIDGE END DRAINS W/PABE | STD-1-7 | 8-24-11 |
| BRIDGE END DRAIN 2'-0" X 8'-7" W/PABE | STD-1-8 | 5-01-95 |
| STD. PRECAST PRESTRESSED BRIDGE DECK PANELS GENERAL DETAILS | STD-4-1 | 4-08-05 |
| STD. PRECAST PRESTRESSED BRIDGE DECK PANELS DESIGN CRITERIA | STD-4-2 | 4-08-05 |
| STD. PRECAST PRESTRESSED BRIDGE DECK PANELS GENERAL DETAILS | STD-4-3 | 3-02-02 |
| STD. PRECAST PRESTRESSED BRIDGE DECK PANELS CONSTRUCTION DETAILS | STD-4-4 | 6-10-96 |
| STANDARD PILE DETAILS | STD-5-1 | 10-25-93 |
| STANDARD PILE DETAILS | STD-5-2 | 5-01-14 |
| STANDARD SEISMIC DETAILS | STD-6-1 | 11-01-10 |
| STANDARD SEISMIC DETAILS | STD-6-2 | 11-07-94 |
| REINFORCING BAR SUPPORT DETAILS FOR CONCRETE SLABS | STD-9-1 | 10-07-08 |
| MISCELLANEOUS ABUTMENT & DRAINAGE DETAILS | STD-10-1 | 4-08-05 |
| BRIDGE RAILING W/ STRUCTURAL TUBING | STD-11-1 | 5-01-14 |
| STD. DETAILS AND INT. DIAPH. DETAILS FOR BULB-TEE BEAMS | STD-14-1 | 5-01-14 |
| SAFETY APPROACH TO UNDERPASSES GRADING DESIGH AND SLOPE PROTECTION | RD01-SA-1 | 10-15-02 |

NOTE: WHERE UNDERGROUND PIPE LINES MAY BE ENCOUNTERED DURING CONSTRUCTION, IT SHALL BE THE CONTRACTORS RESPONSIBILITY TO PROTECT THESE LINES FROM ANY DAMAGE. WHERE RELOCATION OR READJUSTMENT OF A UTILITY MAY BE REQUIRED, IT SHALL BE DONE BY THE OWNER OF THE SAME.

GRATE TYPE BRIDGE DECK DRAIN LOCATIONS

| NUMBER | STATION | NUMBER | STATION | NUMBER | STATION |
|---|---|---|---|---|---|
| 1 | 5+304.75 | 8 | 5+317.75 | 15 | 5+358.50 |
| 2 | 5+305.75 | 9 | 5+320.00 | 16 | 5+360.00 |
| 3 | 5+306.75 | 10 | 5+335.00 | 17 | 5+362.25 |
| 4 | 5+308.25 | 11 | 5+340.00 | 18 | 5+364.50 |
| 5 | 5+311.00 | 12 | 5+355.00 | 19 | 5+366.75 |
| 6 | 5+313.25 | 13 | 5+356.00 | 20 | 5+369.00 |
| 7 | 5+315.50 | 14 | 5+357.00 | 21 | 5+371.25 |

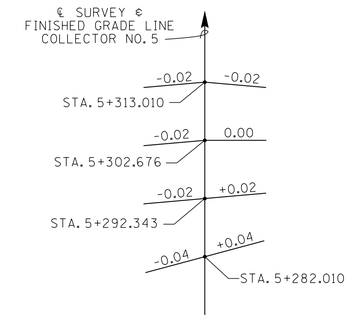


TRANSITION SKETCH

## REINFORCED CONCRETE SLOPE PAVEMENT

PAVE SLOPES AND EXPOSED EARTH UNDER BRIDGES WITH 102 THICK CEMENT CONCRETE SLAB REINFORCED WITH 6MM GAGE WIRE FABRIC @ 152MM CENTERS AND 2.832 KG. PER M² THE WIRE FABRIC REINFORCEMENT SHALL BE PLACED AT ONE-HALF THE DEPTH OF THE SLAB AND EXTEND TO WITHIN 76MM OF ITS EDGE WITH A 305MM LAP REQ'D. ON ALL SHEETS. THE COST OF THE WIRE FABRIC REINFORCEMENT TO BE INCLUDED IN THE UNIT PRICE BID FOR ITEM 709M04, REINFORCED CONCRETE SLOPE PAVEMENT. 13 MILIMETER PREMOULDED EXPANSION JOINTS WITHOUT LOAD TRANSFERS SHALL BE FORMED ABOUT ALL STRUCTURES AND FEATURES PROJECTING THROUGH, IN OR AGAINST THE SLAB. THE SLAB SHALL BE GROOVED PARALLEL WITH AND AT RIGHT ANGLES TO THE UNDER ROADWAY CENTER LINE AT 1828MM CENTERS. DEPTH OF GROOVE TO BE NOT LESS THAN 25MM. (SEE STD. DWG. RD01-SA-1 FOR LIMITS OF SLOPE PROTECTION.)

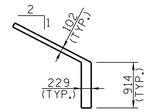


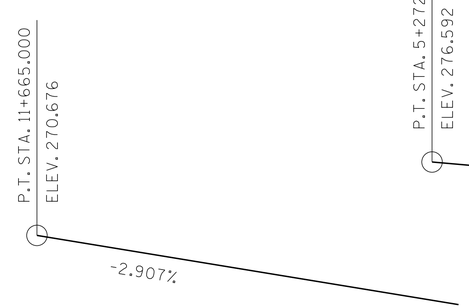


GRADE SKETCH
STATE ROUTE 115

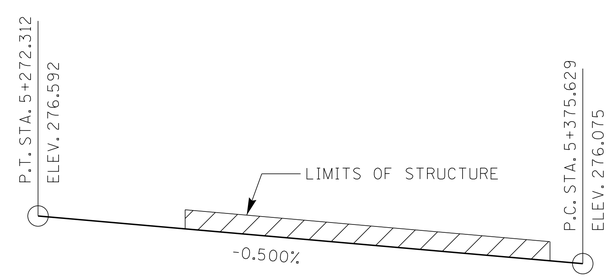


GRADE SKETCH
COLLECTOR NO. 5

NOTE: ALL DIMENSIONS SHOWN IN MILLIMETERS, WITH THE EXCEPTION OF STATIONS AND ELEVATIONS, UNLESS OTHERWISE NOTED.

3-3.600 LANES ROADWAY WITH 2.400 SHLD. 0.610 CURB AND GUTTER, 1.800 SIDEWALK AND STD-11-1 PARAPET
DESIGN SPEED = 40 km/hr

STATE OF TENNESSEE
DEPARTMENT OF TRANSPORTATION
BRIDGE NO. 2
LAYOUT OF BRIDGE
COLLECTOR NO. 5
OVER
STATE ROUTE 115
BRIDGE I.D. NO. 47SR1150033
STATION 5+334.806
KNOX COUNTY
2015

CORRECT _____ ENGINEER OF STRUCTURES

| | | | |
|---|---|---|---|
| DESIGNED BY | ALI OMAR | DATE | 08/15 |
| DRAWN BY | T. KIRK | DATE | 08/15 |
| SUPERVISED BY | BIRDWELL/DIETERS | DATE | 08/15 |
| CHECKED BY | C. DIETERS | DATE | 09/15 |

GN1137F.DGN

## GENERAL NOTES

SPECIFICATIONS: STANDARD ROAD AND BRIDGE SPECIFICATIONS OF THE TENNESSEE DEPARTMENT OF TRANSPORTATION (JANUARY 1, 2015 EDITION).

LOADING: HL-93 LIVE LOADING; SEISMIC PERFORMANCE ZONE 1 WITH AS=0.190, SDS=0.340 AND SD1=0.119 (1000 YEAR RETURN PERIOD). DEAD LOAD INCLUDES 171 kg/m² FOR FUTURE WEARING SURFACE.

DESIGN SPECIFICATIONS: AASHTO LRFD SEVENTH EDITION, 2014, AND THE 2011 AASHTO GUIDE SPECIFICATIONS FOR LRFD SEISMIC BRIDGE DESIGN, EDITION 2 (WITH INTERIMS.)

CONCRETE: TO BE CLASS "A" f.'c (CAST IN PLACE) = 21 KPA EXCEPT AS NOTED OTHERWISE.

CLASS "D" CONCRETE FOR BRIDGE DECKS SHALL BE IN ACCORDANCE WITH SECTION 604 OF THE STANDARD SPECIFICATIONS.

BRIDGE DECK SURFACE FINISH: TO BE IN ACCORDANCE WITH METHOD 3 IN ARTICLE 604.22 OF THE STANDARD SPECIFICATIONS.

BRIDGE DECK FORMS: BRIDGE DECK FORMS FOR CONCRETE DECKS SHALL BE CONSTRUCTED USING EITHER REMOVABLE FORMS OR PERMANENT FORMS. PERMANENT FORMS MAY BE EITHER REMAIN-IN-PLACE STEEL OR PRECAST, PRESTRESSED CONCRETE PANELS. IN EITHER CASE, FORMS SHALL BE ATTACHED BY MEANS OTHER THAN WELDING TO MAIN STRUCTURAL MEMBERS OR REINFORCING STEEL. TEMPORARY ERECTION DIAPHRAGMS MUST BE USED AT THE ENDS OF PRECAST CONCRETE GIRDERS WHERE END DIAPHRAGMS, SUPPORT DIAPHRAGMS, OR ABUTMENT BACKWALLS ARE TO BE POURED CONCURRENTLY WITH THE DECK AND SHALL BE PROVIDED ELSEWHERE IN ACCORDANCE WITH THE SPECIFICATIONS TO PREVENT GIRDER ROTATION. SEE STANDARD DRAWINGS STD-4-1 THRU 4, STD-14-1 AND ARTICLE 604.05 OF THE STANDARD SPECIFICATIONS.

REINFORCING STEEL: SHALL BE ASTM A615M GRADE 400 UNLESS NOTED OTHERWISE. SEE SECTION 604 AND 907 OF THE STANDARD SPECIFICATIONS.

SLAB OVERHANGS SUPPORTED BY BULB-TEE BEAMS: IT IS RECOMMENDED THAT SPACING OF OVERHANG BRACKETS FOR BULB-TEE BEAMS NOT EXCEED 610 CENTER TO CENTER.

NOTE: PILES SHALL BE EQUIPPED WITH CAST STEEL POINTS. ALSO, SEE STANDARD DRAWING STD-5-1 FOR ADDITIONAL NOTES.

SPECIAL NOTE: FOUNDATIONS FOR BENT NO. 1 SHALL BE EXCAVATED TO THE BOTTOM OF FOOTING ELEVATIONS SHOWN; ROD SOUNDINGS SHALL THEN BE MADE AS DIRECTED BY THE ENGINEER. FROM THE RESULTS OBTAINED THE ENGINEER WILL DECIDE IF PILES WILL BE USED OR THE FOOTINGS CARRIED TO ROCK. COST OF ROD SOUNDING TO BE INCLUDED IN THE UNIT PRICE BID FOR OTHER ITEMS. NO REINFORCING STEEL FOR BENT COLUMNS OR FOOTINGS SHALL BE ORDERED UNTIL FINAL ELEVATIONS HAVE BEEN DETERMINED.

BRIDGE RAIL SYSTEM: BUILD BRIDGE RAILINGS ACCORDING TO STANDARD DRAWING STD-11-1. THE RAILING SHALL BE FORMED AND CAST PLUMB, NOT PERPENDICULAR TO THE SLAB. THE DIMENSIONS AT THE TRAFFIC FACE SHALL BE KEPT CONSTANT, WITH VARIATION DUE TO CROSS SLOPE ACCOMMODATED AT THE REAR FACE.

NOTE: THE CONTRACTOR SHALL PROVIDE 100% CONVENTIONAL FALL PROTECTION FOR WORKERS INSTALLING DECKING ABOVE 4572mm.

SHOP DRAWINGS: SEE SECTION 105.02 OF THE STANDARD SPECIFICATIONS.

VALUE ENGINEERING ALTERNATE BRIDGE DESIGN CRITERIA: ALTERNATE BRIDGE DESIGN PROPOSALS MAY NOT DIMINISH THE FUNCTIONAL OR STRUCTURAL EQUIVALENCY OF THE BRIDGE AND MUST MEET OR EXCEED BOTH THE SERVICE LEVEL AND ULTIMATE CAPACITIES OF THE CONTRACT PLANS STRUCTURE. ADDITIONALLY, THE WATERWAY OPENING AND FLOOD CLEARANCES MAY NOT BE REDUCED; FOR GRADE SEPARATIONS, THE HORIZONTAL CLEARANCES MAY NOT BE REDUCED, NOR MAY THE VERTICAL CLEARANCES BE LESS THAN THE MINIMUM ACCEPTABLE FOR THE TYPE FACILITY CROSSED.

PILES: TO BE HP250X62 METRIC DRIVEN TO REFUSAL ON ROCK OR A MINIMUM BEARING OF 50 TONNES FOR THE ABUTMENTS AND BENT NO. 1.

FINISHING CONCRETE SURFACES: CONCRETE FINISHING SHALL BE IN ACCORDANCE WITH SECTION 604.21 OF THE TENNESSEE STANDARD SPECIFICATION. A CLASS I FINISH FOLLOWED BY AN APPLIED TEXTURE FINISH SHALL BE USED IN LIEU OF A CLASS II FINISH. NO TEXTURE FINISH SHALL BE APPLIED PRIOR TO COMPLETION OF PAVING AND HAULING OPERATIONS AT THE BRIDGE SITE. THE APPLIED TEXTURE FINISH SHALL BE MEASURED AND PAID FOR UNDER ITEM NO. 604M04.01.

NOTE: THE FILLS AT THE ENDS OF THE BRIDGE SHALL BE IN PLACE AND THOROUGHLY COMPACTED BEFORE ANY ABUTMENTS PILES ARE DRIVEN.

CONST. NO. 47026-3279-14

| PROJECT NO. | YEAR | SHEET NO. |
|---|---|---|
| NH-115(54) | 2015 | |

REVISIONS

| NO. | DATE | BY | BRIEF DESCRIPTION |
|---|---|---|---|
| | | | |

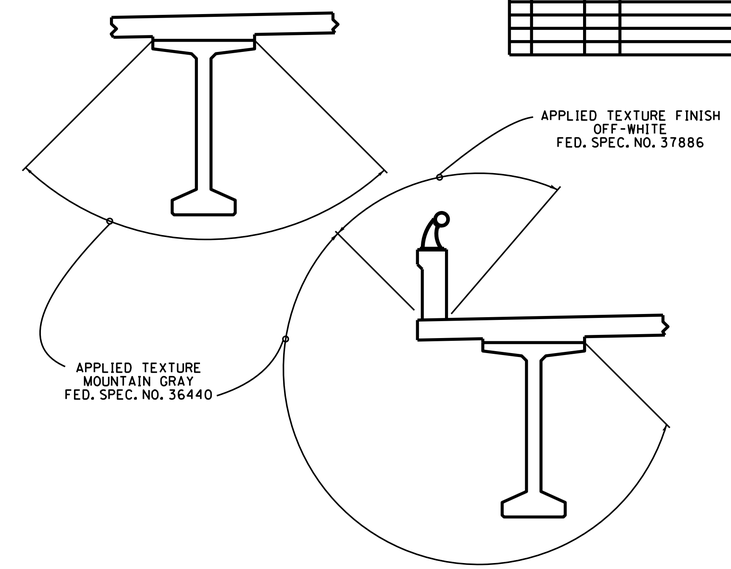


## ESTIMATED QUANTITIES

| | ITEM NO. | DESCRIPTION | UNIT | TOTAL | SUPERSTRUCTURE | ABUTMENT NO. 1 | BENT NO. 1 | ABUTMENT NO. 1 |
|---|---|---|---|---|---|---|---|---|
| 2 | 204M02.01 | DRY EXCAVATION (BRIDGES) | m³ | 183 | | 69 | 45 | 69 |
| | 204M14 | CORE DRILLING FOR PILES (ROCK) | m | 208 | | | 208 | |
| 6 | 303M01.02 | GRANULAR BACKFILL (BRIDGES) | TONNE | 38 | | 19 | | 19 |
| | 604M02.03 | EPOXY COATED REINFORCING STEEL | Kg. | 63088 | 60810 | 1137 | | 1141 |
| 5 | 604M03.01 | CLASS "A" CONCRETE (BRIDGES) | m³ | 244 | | 61 | 122 | 61 |
| | 604M03.02 | STEEL BAR REINFORCEMENT (BRIDGES) | Kg. | 23898 | 599 | 3778 | 15624 | 3897 |
| 1 | 604M03.04 | PAVEMENT AT BRIDGE ENDS | m² | 227 | | | | |
| | 604M03.09 | CLASS "D" CONCRETE (BRIDGE DECK) | m³ | 304 | 304 | | | |
| | 604M04.01 | APPLIED TEXTURE FINISH (NEW STRUCTURES) | m² | 2789 | | | | |
| | 604M05.31 | BRIDGE DECK GROOVING (MECHANICAL) | m² | 1134 | | | | |
| | 606M02.03 | STEEL PILES (250mm) | m | 746 | | 168 | 471 | 107 |
| 7 | 606M02.06 | PILE TIPS (STEEL PILES, 250mm) | EA. | 84 | | 18 | 48 | 18 |
| 9 3 | 615M01.11 | PRESTRESSED CONCRETE BULB TEE BEAM (150mm WEB)(BT-63) | m | 415 | | | | |
| | 620M05 | CONCRETE PARAPET WITH STRUCTURAL TUBING | m | 164 | | | | |
| | 709M04 | REINFORCED CONCRETE SLOPE PAVEMENT | m³ | 62 | | 28 | | 34 |
| 4 | 710M09.01 | 150mm PERF. PIPE WITH VERTICAL DRAIN SYSTEM | m | 53 | | 27 | | 26 |
| | 710M09.02 | 150mm PIPE UNDERDRAIN | m | 10 | | 5 | | 5 |

1 NOTE: PRIOR TO CONSTRUCTION OF THE PAVEMENT AT BRIDGE ENDS, THE CONTRACTOR SHALL SUBMIT A PROPOSED BILL OF STEEL TO THE ENGINEER FOR APPROVAL.

2 EXCAVATION BASED ON FINAL PROFILE AT ABUTMENTS AND BENT.

3 NOTE: COST OF ELASTOMERIC PADS AND RUBBER BONDING CEMENT TO BE INCLUDED IN THE UNIT PRICE BID FOR THE PRESTRESSED BEAM.

4 NOTE: COST OF POLYETHYLENE SHEETING AND ALL MISCELLANEOUS ITEMS NECESSARY FOR INSTALLATION TO BE INCLUDED IN THE UNIT PRICE BID FOR PERFORATED PIPE.

5 NOTE: THE COST OF ALL MATERIALS AND LABOR NECESSARY FOR THE INSTALLATION OF 18 ANCHOR BOLT ASSEMBLIES SHALL BE INCLUDED IN THE UNIT PRICE BID FOR ITEM 604M03.01 CLASS "A" CONCRETE (BRIDGES).

6 NOTE: GRANULAR BACKFILL SHALL BE CLASS "A" GRADING "D" MATERIAL. SEE STANDARD DRAWING STD-10-1.

7 NOTE: THE UNIT PRICE BID FOR THE CAST STEEL POINTS SHALL INCLUDE FURNISHING AND INSTALLATION TO THE PILES.

8 NOTE: THE COST OF BITUMINOUS-FIBERBOARD AND ALL MISCELLANEOUS JOINT MATERIAL TO BE INCLUDED IN THE UNIT PRICE BID FOR OTHER ITEMS.

9 NOTE: INTERMEDIATE DIAPHRAGMS SHALL BE PAID FOR IN ACCORDANCE WITH STANDARD DRAWING STD-14-1.

10 NOTE: COST OF 21 BRIDGE DECK DRAINS TO BE INCLUDED IN THE UNIT PRICE BID FOR THE PARAPET.

## APPLIED TEXTURE FINISH SKETCH

NOTE: IN ADDITION TO THE SURFACES SHOWN IN THE APPLIED TEXTURE FINISH SKETCH ALL EXPOSED SURFACES OF THE WINGWALLS, ABUTMENT BEAMS, BENT AND EXTERIOR PORTIONS OF ENDWALLS ARE TO RECEIVE AN APPLIED TEXTURE FINISH.

DIVISION OF STRUCTURES METRIC

NOTE: ALL DIMENSIONS SHOWN IN MILLIMETERS, WITH THE EXCEPTION OF STATIONS AND ELEVATIONS, UNLESS OTHERWISE NOTED.

STATE OF TENNESSEE
DEPARTMENT OF TRANSPORTATION
BRIDGE NO. 2
GENERAL NOTES AND
ESTIMATED QUANTITIES
COLLECTOR NO. 5
OVER
STATE ROUTE 115
STATION 5+334.806
KNOX COUNTY
2015

CABRINA M. DIETERS — STATE OF TENNESSEE

CORRECT Dwayne J. Tayer
ENGINEER OF STRUCTURES

U-73-78

DESIGNED BY ALI OMAR DATE 09-14
DRAWN BY RODNEY CHANDLER DATE 08-15
SUPERVISED BY CMD/BIRDWELL DATE 08-15
CHECKED BY C. DIETERS DATE 09-15

FD1137F.DGN

CONST. NO. 47026-3279-14

| PROJECT NO. | YEAR | SHEET NO. |
|---|---|---|
| NH-115(54) | 2015 | |

REVISIONS

| NO. | DATE | BY | BRIEF DESCRIPTION |
|---|---|---|---|
| | | | |

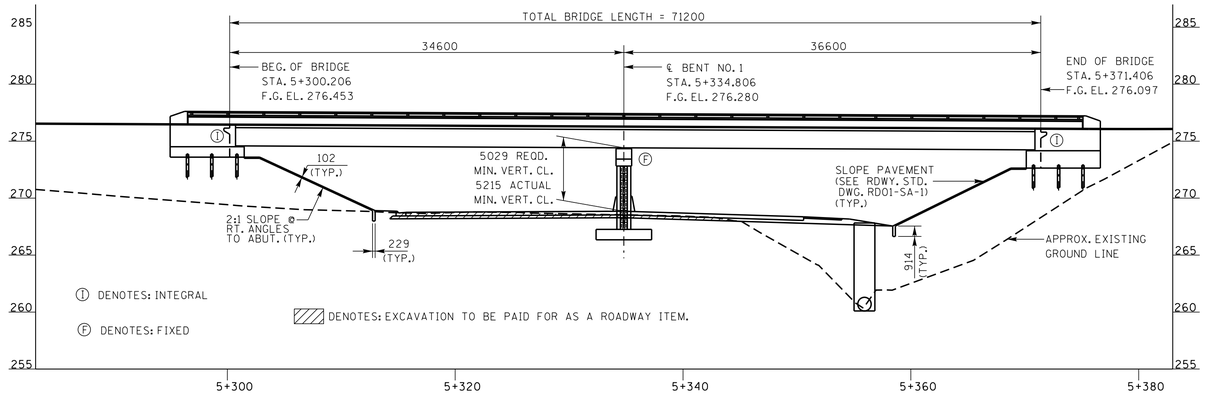


ELEVATION

(AT RT. ∆S TO ℄ SURVEY COLLECTOR NO. 3)
(SCALE: 1:15)

COLLECTOR NO. 5
PI 5+263.273
N 177,609.0951
E 784,606.6618
∆ 91° 07′ 00″ (LT)
R 60.000
Lc 95.417
T 61.181
E 25.692
S.E. 4.00%
TRANS. LENGTH 31
DESIGN SPEED 40km/h

COLLECTOR NO. 5
PI 5+381.701
N 177,658.7688
E 784,470.0393
∆ 24° 58′ 11″ (LT)
R 60.000
Lc 26.148
T 13.285
E 1.453
S.E. 4.00%
TRANS. LENGTH 31
DESIGN SPEED 40km/h

DESIGN SPECIFICATIONS: AASHTO 2012 LRFD BRIDGE DESIGN SPECIFICATIONS (6TH EDITION) WITH INTERIMS. SEISMIC PERFORMANCE ZONE 1 WITH AS=0.190, SDS=0.340, SD1=0.119 (1000 YEAR RETURN PERIOD).

NOTES:

REQUIRED:

1) SUFFICIENT GROUND, ROCK, AND CORING INFORMATION FOR BRIDGE FOUNDATIONS.
2) APPROXIMATE EXISTING GROUND AND ROCK LINE.

BENCHMARKS:

BENCHMARK: BM-5
ELEVATION 268.063
NAIL IN POWER POLE AND TELEPHONE POLE BELOW ASPHALT DRIVE SOUTH BOUND ACROSS FROM MARTHA WASHINGTON HEIGHTS

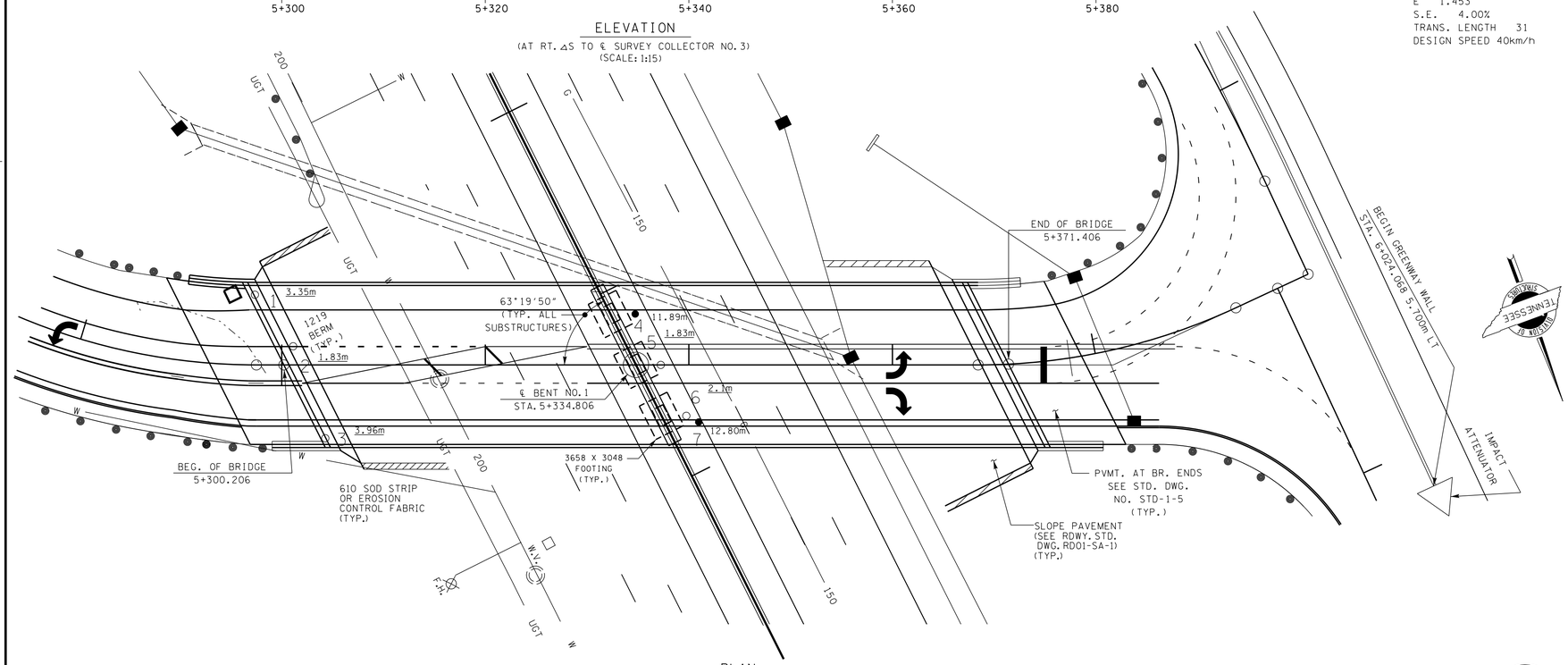


PLAN

(SCALE: 1:15)

| BORING NO. | STATION | OFFSET | GROUND ELEVATION | ROCK ELEVATION | TOTAL DEPTH |
|---|---|---|---|---|---|
| 1 | 5+297.34 | LT 6.89m | 267.87m | N/A | 3.35m |
| 2 | 5+301.12 | LT 1.83m | 267.93m | N/A | 1.83m |
| 3 | 5+304.28 | RT 7.20m | 267.35m | N/A | 3.96m |
| 4 | 5+334.73 | LT 5.0m | 267.26m | 257.26m | 11.89m |
| 5 | 5+337.24 | ℄ | 267.09m | N/A | 1.83m |
| 6 | 5+339.75 | RT 5.0m | 266.92m | N/A | 2.1m |
| 7 | 5+340.97 | RT 5.61m | 266.92m | 256.4m | 12.80m |

NOTE: THIS DRAWING IS FOR FOUNDATION DATA ONLY AND IS NOT TO BE USED AS A LAYOUT.

NOTE: ALL DIMENSIONS SHOWN IN MILLIMETERS, WITH THE EXCEPTION OF STATIONS AND ELEVATIONS, UNLESS OTHERWISE NOTED.

STATE OF TENNESSEE
DEPARTMENT OF TRANSPORTATION
BRIDGE NO. 2
FOUNDATION DATA
COLLECTOR NO. 5
OVER
STATE ROUTE 115
STATION 5+334.806
KNOX COUNTY
2015

DIVISION OF STRUCTURES — METRIC

CORRECT Wayne G. Seger
ENGINEER OF STRUCTURES

DESIGNED BY C.DIETERS DATE 11-14
DRAWN BY C.DIETERS DATE 11-14
SUPERVISED BY W. SEGER DATE 11-14
CHECKED BY C.DIETERS DATE 11-14

U-73-79

FD1137F.DGN

| TYPE | YEAR | PROJECT NO. | SHEET NO. |
|---|---|---|---|
| | 2015 | NH-115(54) | |
| | | | |
| | | | |
| | | | |

CONST. NO. 47026-3279-14

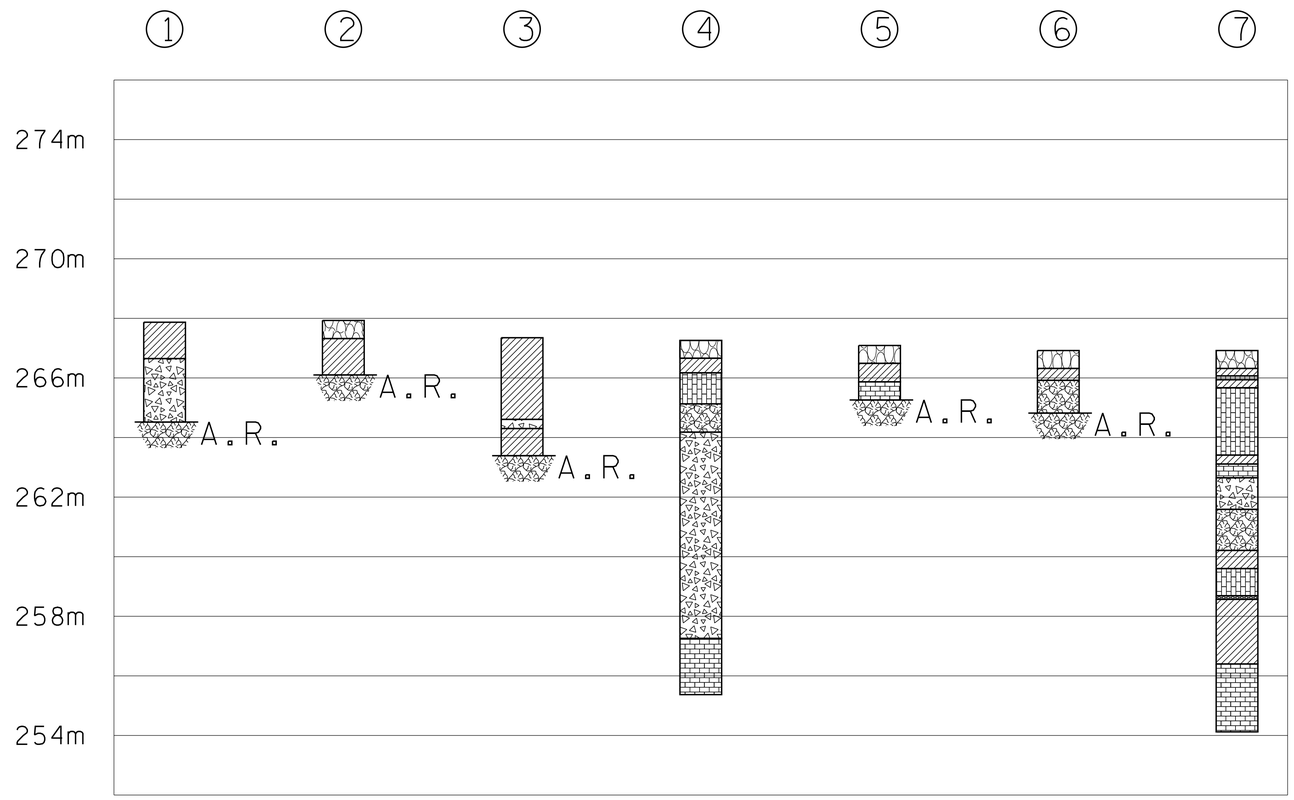


## LEGEND

- ASPHALT & BASE
- CLAY (TYPE A MATERIAL)
- CLAY WITH INTERMITTENT ROCK FRAGMENTS (TYPE A MATERIAL)
- LIMESTONE (TYPE B MATERIAL)
- HIGHLY FRACTURED LIMESTONE (TYPE B MATERIAL)
- LIMESTONE BOULDER (FILL) (TYPE D MATERIAL)
- TREE (TYPE A MATERIAL)

TYPE MATERIAL-SEE DEFINITION OF TERMS USED FOR EARTHWORK GRADING CALCULATIONS SHEET.
A.R.= AUGER REFUSAL

NOTE:
BORING DEPICTIONS SHOWN ON FOUNDATION DATA SHEET INDICATE GENERAL SOIL AND ROCK TYPES AT THE SPECIFIC BORING LOCATIONS.

SEALED BY

TENNESSEE METRIC D.O.T.

COORDINATE VALUES ARE NAD/83(1995) AND ARE DATUM ADJUSTED BY THE FACTOR 1.00 & TIED TO THE TGRN.

STATE OF TENNESSEE
DEPARTMENT OF TRANSPORTATION

BRIDGE NO. 2
FOUNDATION DATA
COLLECTOR NO. 5
OVER
STATE ROUTE 115
STATION 5+334.806
KNOX COUNTY
2015

U-73-80

9/21/2015 1:42:21PM
C:\FILES\DetailCheck by County and Project & Misc\Knox\Bridge No.2 Collector 5 over State Route 115\Foundation Data\10024L04_BoringProfiles_4710214.dgn

SP1137F.DGN

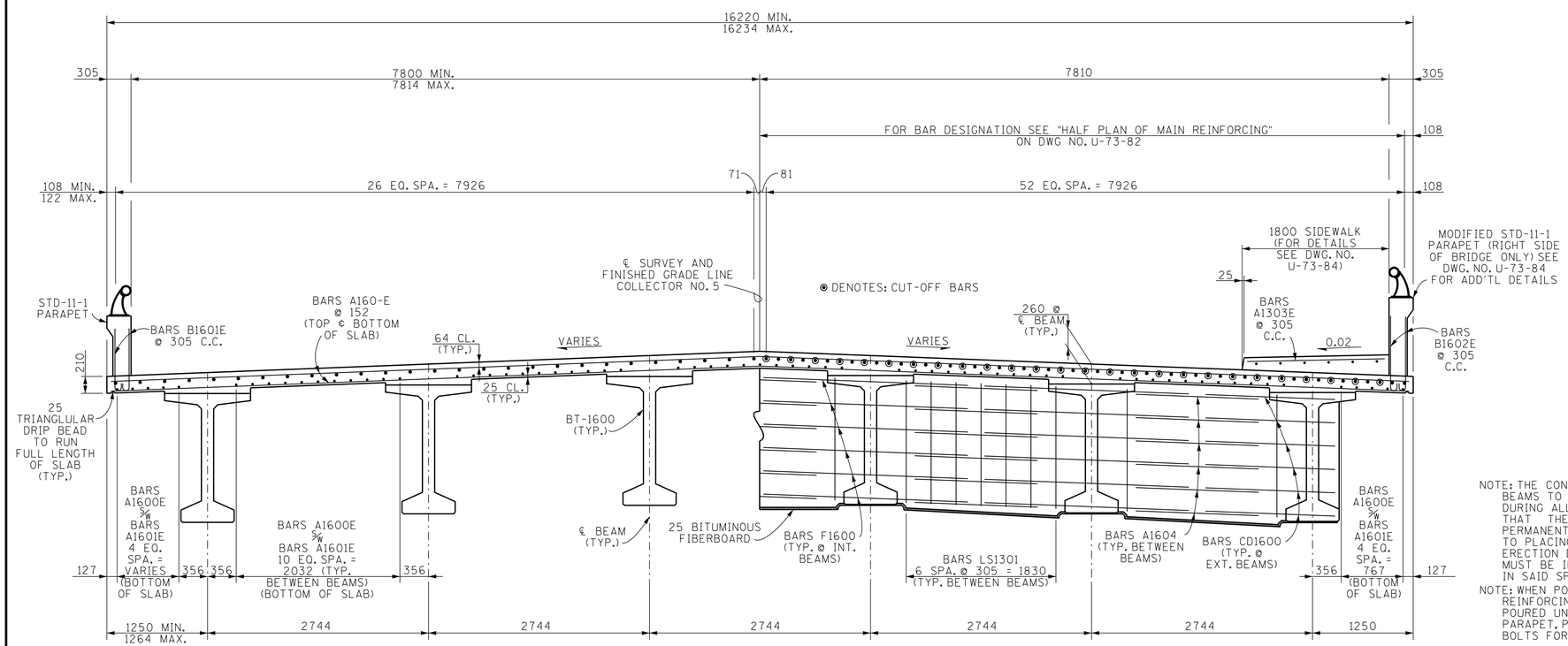


## TYPICAL CROSS-SECTION

(LOOKING FORWARD ON SURVEY)

| CONST. NO. 47026-3279-14 | | |
|---|---|---|
| PROJECT NO. | YEAR | SHEET NO. |
| NH-115(54) | 2015 | |

REVISIONS

| NO. | DATE | BY | BRIEF DESCRIPTION |
|---|---|---|---|
| | | | |

NOTE: THE CONTRACTOR IS SOLELY RESPONSIBLE FOR SUPPORTING THE BEAMS TO PREVENT DAMAGE DUE TO TWISTING OR OVERTURNING DURING ALL PHASES OF CONSTRUCTION. IT IS STRONGLY RECOMMENDED THAT THE TEMPORARY ERECTION DIAPHRAGMS BE INSTALLED AND THE PERMANENT INTERMEDIATE DIAPHRAGMS BE POURED AND CURED PRIOR TO PLACING ANY LOADS ON THE GIRDERS. HOWEVER, TEMPORARY ERECTION DIAPHRAGMS AND PERMANENT INTERMEDIATE DIAPHRAGMS MUST BE IN PLACE IN THE SPAN AT THE TIME THE SLAB IS POURED IN SAID SPAN.

NOTE: WHEN POURING SLAB, PROVISIONS SHALL BE MADE FOR SETTING REINFORCING STEEL FOR PARAPET. THE PARAPET SHALL NOT BE POURED UNTIL THE SLAB IS POURED AND CURED. WHEN POURING PARAPET, PROVISIONS SHALL BE MADE FOR SETTING ANCHOR BOLTS FOR PARAPET RAILS. ALSO SEE STD. DWG. NO. STD-11-1.

NOTE: NO PORTION OF THE SIDEWALK AND PARAPET SHALL BE POURED UNTIL THE ENTIRE DECK SLAB IS IN PLACE.

NOTE: OUTSIDE EDGE OF SLAB AND BRIDGE RAIL TO CONFORM TO HORIZONAL CURVE.

ESTIMATED QUANTITIES

| CLASS "D" CONCRETE (BRIDGE DECK) M3 | EPOXY COATED REINFORCING STEEL KG | REINFORCING STEEL KG |
|---|---|---|
| 304 | 60810 | 599 |

DECK CONCRETE POURING SEQUENCE: SLAB CONSTRUCTION JOINTS MAY BE LOCATED AT THE CONTRACTOR'S OPTION SUBJECT TO THE FOLLOWING:
1. NO CONSTRUCTION JOINT MAY BE LOCATED CLOSER THAN 3050mm OR FURTHER THAN 4575mm FROM AN INTERIOR SUPPORT.
2. THE SLAB IN THE MIDDLE SECTION OF BOTH ADJACENT SPANS MUST BE POURED TO WITHIN AT LEAST 4575mm OF THE SUPPORTS EITHER PRIOR TO OR CONCURRENTLY WITH THE SLAB OVER AN INTERIOR SUPPORT.
3. ALL SLAB CONSTRUCTION JOINTS SHALL BE IN ACCORDANCE WITH THE SLAB CONSTRUCTION JOINT DETAIL SHOWN BELOW.

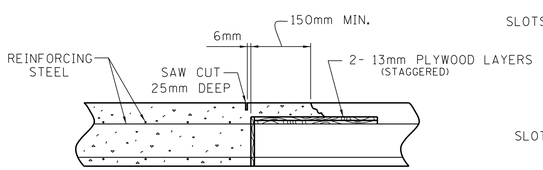


## SLAB CONSTRUCTION JOINT DETAIL

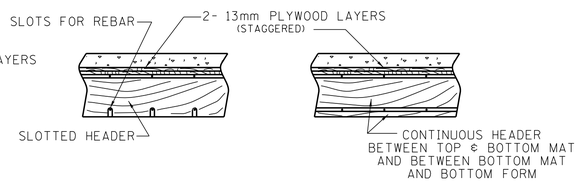


ALTERNATE "A" ALTERNATE "B"

## ALTERNATE HEADER DETAILS

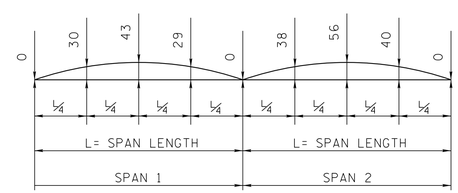


## DEAD LOAD CORRECTION CURVE

THIS CURVE IS FOR DEAD LOAD SLAB AND ALL DEAD LOADS THAT ARE APPLIED AFTER THE SLAB IS IN PLACE.

IF PRESTRESSED DECK PANELS ARE USED AND THE BEAMS ARE PROFILED AFTER PANELS ARE IN PLACE, REDUCE THE DEAD LOAD CORRECTION VALUES SHOWN BY 25% .

NOTE: ALL DIMENSIONS SHOWN IN MILLIMETERS, WITH THE EXCEPTION OF STATIONS AND ELEVATIONS, UNLESS OTHERWISE NOTED.

DIVISION OF STRUCTURES METRIC

STATE OF TENNESSEE
DEPARTMENT OF TRANSPORTATION
BRIDGE NO. 2
SUPERSTRUCTURE
COLLECTOR NO. 5
OVER
STATE ROUTE 115
STATION 5+334.806
KNOX COUNTY
2015

CABRINA M. DIETERS
REGISTERED ENGINEER
STATE OF TENNESSEE

CORRECT Wayne G. Sieg
ENGINEER OF STRUCTURES

| | | | |
|---|---|---|---|
| DESIGNED BY | ALI OMAR | DATE | 6-15 |
| DRAWN BY | T. KIRK | DATE | 7-15 |
| SUPERVISED BY | BIRDWELL/DIETERS | DATE | 7-15 |
| CHECKED BY | C. DIETERS | DATE | 9-15 |

U-73-81

SP1137F.DGN

CONST. NO. 47026-3279-14

| PROJECT NO. | YEAR | SHEET NO. |
|---|---|---|
| NH-115(54) | 2015 | |

REVISIONS

| NO. | DATE | BY | BRIEF DESCRIPTION |
|---|---|---|---|
| | | | |

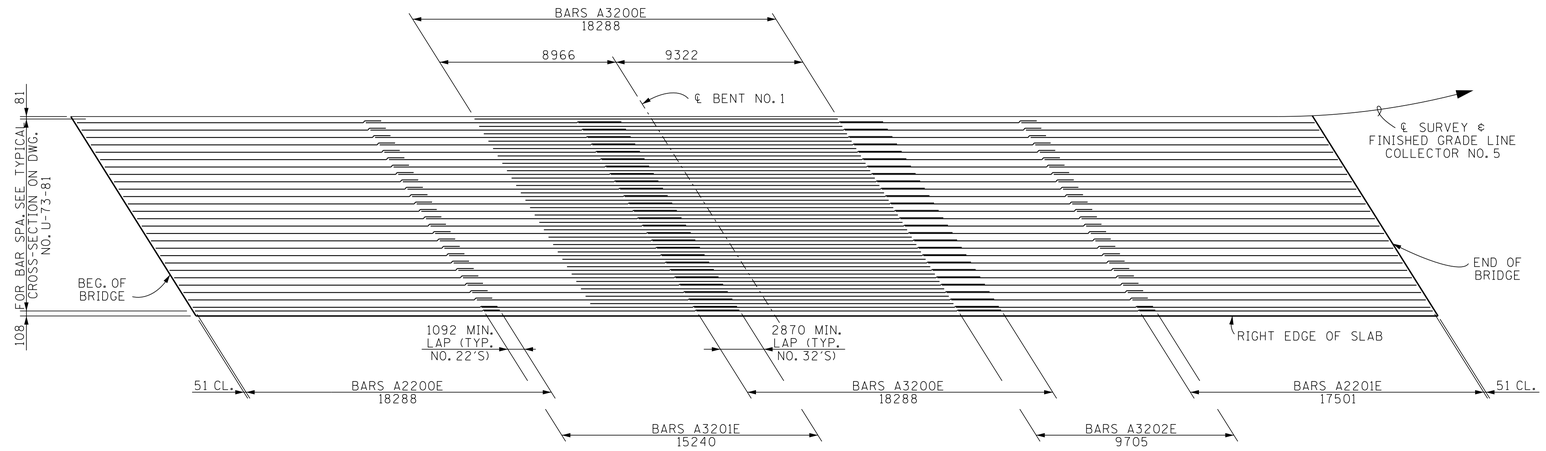


HALF PLAN OF MAIN REINFORCEMENT

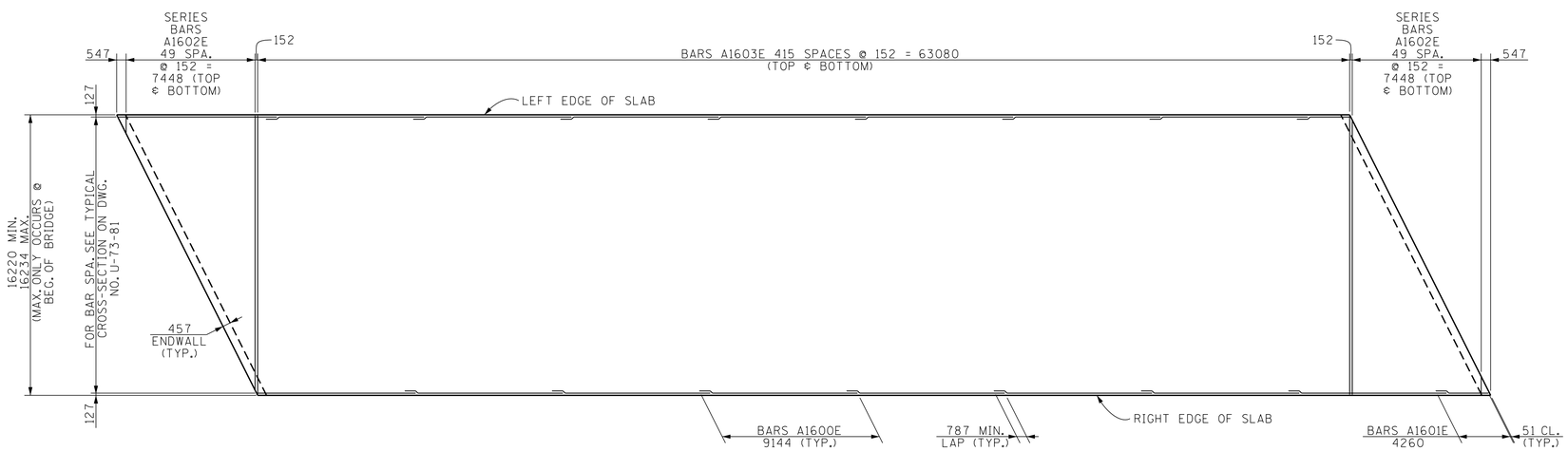


SLAB PLAN

(BARS SHOWN BOTTOM OF SLAB UNLESS OTHERWISE NOTED)

NOTE: ALL DIMENSIONS SHOWN IN MILLIMETERS, WITH THE EXCEPTION OF STATIONS AND ELEVATIONS, UNLESS OTHERWISE NOTED.

STATE OF TENNESSEE
DEPARTMENT OF TRANSPORTATION

BRIDGE NO. 2
SUPERSTRUCTURE DETAILS
COLLECTOR NO. 5
OVER
STATE ROUTE 115
STATION 5+334.806
KNOX COUNTY
2015

CORRECT Wayne J. Segur
ENGINEER OF STRUCTURES

| | | | |
|---|---|---|---|
| DESIGNED BY | ALI OMAR | DATE | 6-15 |
| DRAWN BY | T. KIRK | DATE | 7-15 |
| SUPERVISED BY | BIRDWELL/DIETERS | DATE | 7-15 |
| CHECKED BY | C. DIETERS | DATE | 9-15 |

U-73-82

SP1137F.DGN

CONST. NO. 47026-3279-14

| PROJECT NO. | YEAR | SHEET NO. |
|---|---|---|
| NH-115(54) | 2015 | |

REVISIONS

| NO. | DATE | BY | BRIEF DESCRIPTION |
|---|---|---|---|
| | | | |

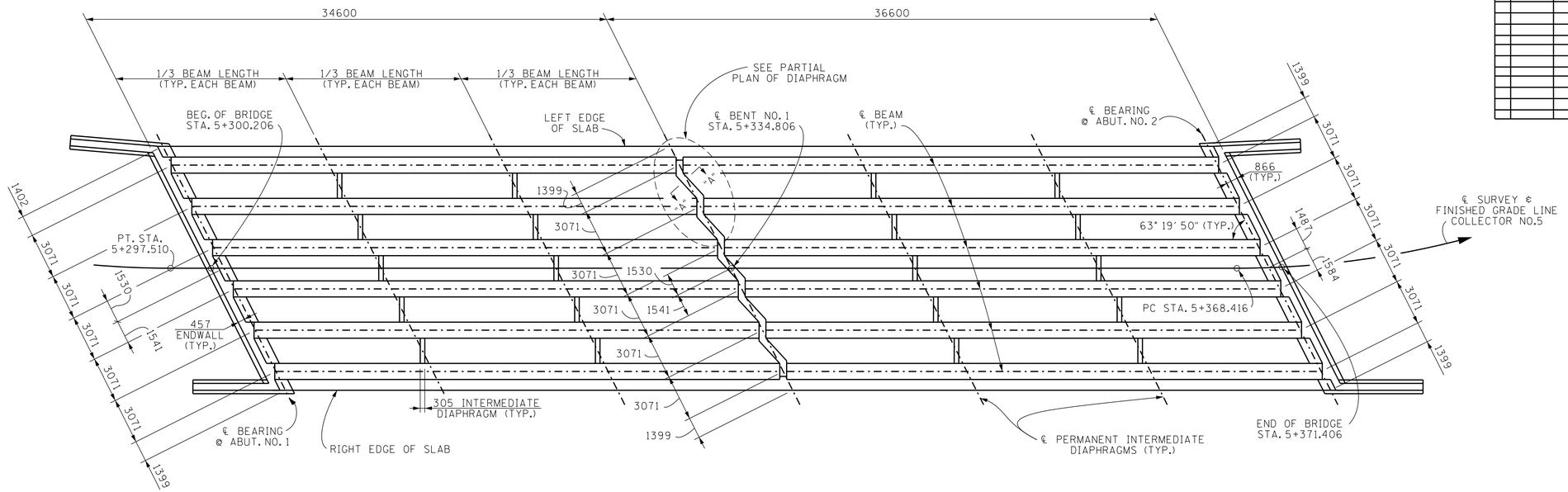


FRAMING PLAN

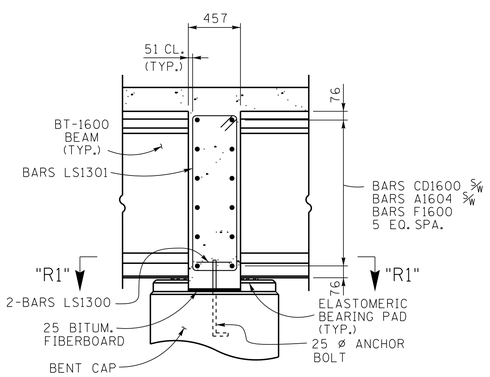


SECTION "A"-"A"

SPECIAL NOTE FOR ANCHOR BOLTS AT BENT: ANCHOR BOLT ASSEMBLIES AT BENT SHALL BE IN ACCORDANCE WITH STANDARD DRAWING STD-6-1.

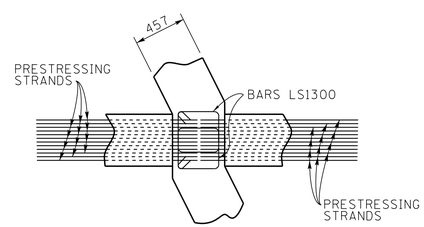


SECTION "R1"-"R1"

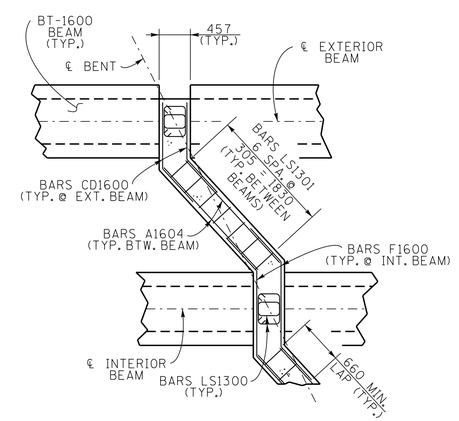


PARTIAL PLAN OF DIAPHRAGM

NOTE: THE SUPPORT DIAPHRAGMS AT THE BENTS SHALL BE FORMED AND THE BOTTOM 381 POURED AS SOON AS POSSIBLE AFTER THE BEAMS HAVE BEEN SET. THE REMAINDER OF THE DIAPHRAGM SHALL BE POURED CONCURRENTLY WITH THE DECK SLAB. THE BEAMS SHALL ATTAIN AN AGE OF AT LEAST 90 DAYS PRIOR TO POURING THE REMAINDER OF THE SUPPORT DIAPHRAGMS AND DECK SLAB. ALL DIAPHRAGM CONCRETE SHALL BE INCLUDED IN THE QUANTITY FOR ITEM 604M03.09.

DIVISION OF STRUCTURES METRIC

NOTE: ALL DIMENSIONS SHOWN IN MILLIMETERS, WITH THE EXCEPTION OF STATIONS AND ELEVATIONS, UNLESS OTHERWISE NOTED.

STATE OF TENNESSEE
DEPARTMENT OF TRANSPORTATION

BRIDGE NO. 2
SUPERSTRUCTURE DETAILS
COLLECTOR NO. 5
OVER
STATE ROUTE 115
STATION 5+334.806
KNOX COUNTY
2015

CABRINA M. DIETERS — STATE OF TENNESSEE — DEPARTMENT OF AGRICULTURE — 1996

CORRECT Wayne J. Seger
ENGINEER OF STRUCTURES

| | | | |
|---|---|---|---|
| DESIGNED BY | ALI OMAR | DATE | 6-15 |
| DRAWN BY | T. KIRK | DATE | 7-15 |
| SUPERVISED BY | BIRDWELL/DIETERS | DATE | 7-15 |
| CHECKED BY | C. DIETERS | DATE | 9-15 |

U-73-83

SP1137F.DGN

CONST. NO. 47026-3279-14

| PROJECT NO. | YEAR | SHEET NO. |
|---|---|---|
| NH-115(54) | 2015 | |

REVISIONS

| NO. | DATE | BY | BRIEF DESCRIPTION |
|---|---|---|---|
| | | | |

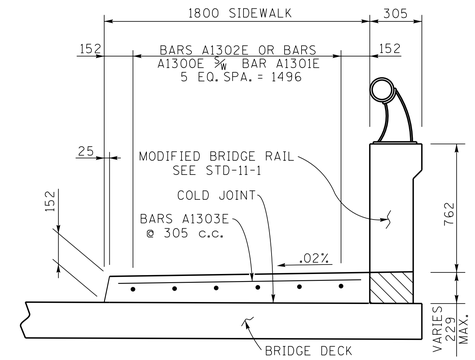


## MODIFIED BRIDGERAIL AND SIDEWALK DETAILS

NOTE: COST OF REINFORCEMENT AND CONCRETE IN MODIFIED BRIDGE RAIL TO BE INCLUDED IN COST OF ITEM NO. 620M-05.

NOTE: THE ADDITIONAL CONCRETE IN THE HATCHED AREA SHALL BE INCLUDED IN THE COST OF THE STD-11-1 PARAPET.

NOTE: ALL CONCRETE AND REINFORCING STEEL FOR SIDEWALK TO BE INCLUDED IN SUPERSTRUCTURE QUANTITIES.

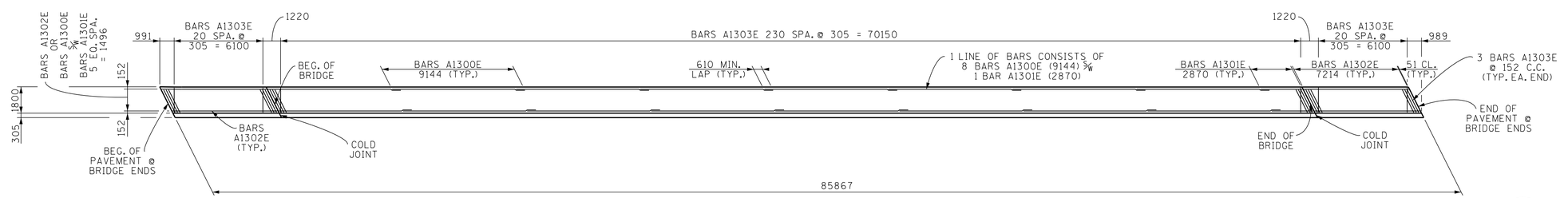


## PLAN OF SIDEWALK

(RIGHT SIDE OF BRIDGE ONLY)

NOTE: ALL DIMENSIONS SHOWN IN MILLIMETERS, WITH THE EXCEPTION OF STATIONS AND ELEVATIONS, UNLESS OTHERWISE NOTED.

STATE OF TENNESSEE
DEPARTMENT OF TRANSPORTATION

BRIDGE NO. 2
SUPERSTRUCTURE DETAILS
COLLECTOR NO. 5
OVER
STATE ROUTE 115
STATION 5+334.806
KNOX COUNTY
2015

CORRECT Wayne G. Sieger
ENGINEER OF STRUCTURES

| | | | |
|---|---|---|---|
| DESIGNED BY | ALI OMAR | DATE | 6-15 |
| DRAWN BY | T. KIRK | DATE | 7-15 |
| SUPERVISED BY | BIRDWELL/DIETERS | DATE | 7-15 |
| CHECKED BY | C. DIETERS | DATE | 9-15 |

U-73-84

TE1137F.DGN

| CONST. NO. 47026-3279-14 | | |
|---|---|---|
| PROJECT NO. | YEAR | SHEET NO. |
| NH-115(54) | 2015 | |

REVISIONS

| NO. | DATE | BY | BRIEF DESCRIPTION |
|---|---|---|---|
| | | | |

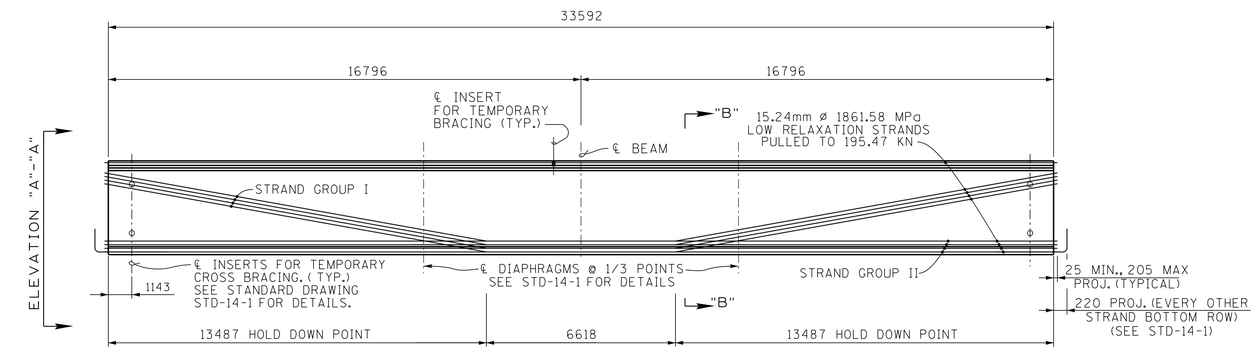


ELEVATION
(SHOWING PRESTRESSING STRANDS)

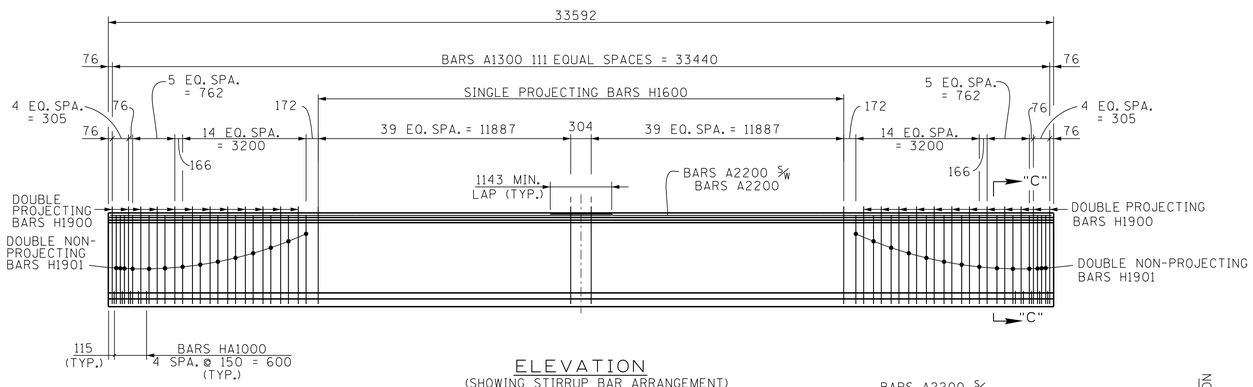


ELEVATION
(SHOWING STIRRUP BAR ARRANGEMENT)

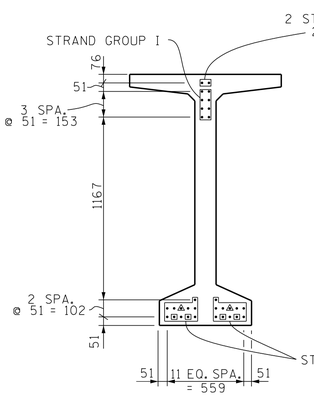


ELEVATION "A" - "A"
(SHOWING PRESTRESSING STRANDS @ ENDS)
(32 STRANDS)

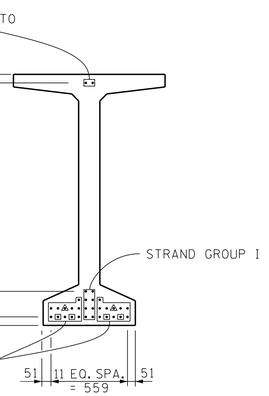


SECTION "B" - "B"
(SHOWING PRESTRESSING STRANDS @ MIDSPAN)
(32 STRANDS)

▲ DENOTES: BREAK BOND 914 FROM END OF BEAM
⊡ DENOTES: BREAK BOND 1524 FROM END OF BEAM

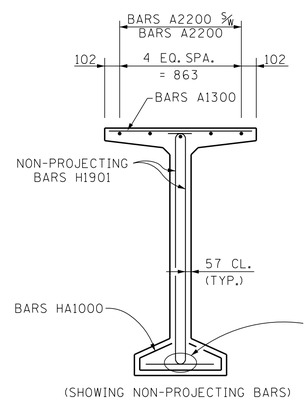


(SHOWING NON-PROJECTING BARS)

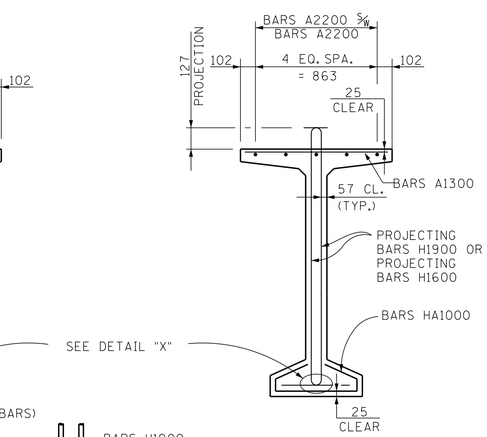


(SHOWING PROJECTING BARS)

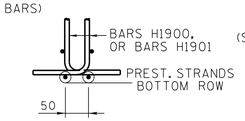


DETAIL "X"

SECTION "C" - "C"

## NOTES:

NOTE: SEE STD-14-1 FOR BULB-TEE BEAM STANDARD DETAILS, NOTES, AND REINFORCING.

ALL BEAMS TO BE BT-1600.

THE CONCRETE FOR THIS CONSTRUCTION SHALL BE OF SUCH PROPERTIES AS TO ATTAIN A COMPRESSIVE STRENGTH OF NOT LESS THAN 55.16 MPa AT THE AGE OF 28 DAYS AND STRESS TRANSFER SHALL NOT BE MADE TO THE BRIDGE MEMBER UNTIL THE TEST SPECIMENS INDICATE THAT THE CONCRETE HAS REACHED A COMPRESSIVE STRENGTH OF AT LEAST 48.27 MPa. SEE GENERAL NOTES FOR CONCRETE FINISHING NOTE.

ALL PRESTRESSING STRANDS SHALL BE 15.24mm DIAMETER ASTM GRADE 1861.58 MPa, 7 WIRE UNCOATED LOW RELAXATION PRESTRESSING STRANDS FULLY STRESSED UNLESS OTHERWISE NOTED.

NOTE: THE PRESTRESSED BEAMS SHALL ATTAIN AN AGE OF AT LEAST 90 DAYS PRIOR TO POURING THE SUPPORT DIAPHRAGMS (EXCLUDING BOTTOM 381) AND DECK SLAB.

## PRESTRESSED BEAM DESIGN DATA - PER BEAM

LIVE LOAD DISTRIBUTION FACTOR FOR MOMENT: 0.948 WHEELS
LIVE LOAD DISTRIBUTION FACTOR FOR SHEAR: 0.948 WHEELS
COMPOSITE DEAD LOAD: DC = 3.225 kN/M
COMPOSITE DEAD LOAD: DW = 3.867 kN/M
COMPOSITE DESIGN SLAB f'c = 20.68 MPa
NOTE: DOWNWARD DEFLECTION UNDER TOTAL DL IS NOT ALLOWED.

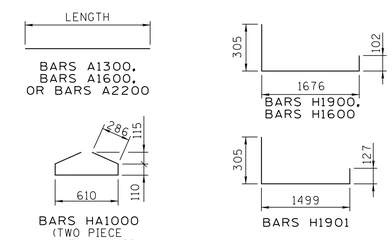


## BILL OF STEEL (PER BEAM)

| BAR | SIZE | NO. REQ'D | LENGTH |
|---|---|---|---|
| A1300 | 13 | 112 | 970 |
| A1600 | 16 | 6 | 1675 |
| A2200 | 22 | 10 | 17374 |
| H1600 | 16 | 80 | 2085 |
| H1900 | 19 | 48 | 2085 |
| H1901 | 19 | 56 | 1930 |
| HA1000 | 10 | 10 | 1400 |

## ESTIMATED QUANTITIES - PER BEAM

| NO. BEAMS REQ'D. | PRESTRESSING STRANDS (LOW RELAXATION) KG | CLASS "A" CONCRETE M3 | REINFORCING STEEL KG |
|---|---|---|---|
| 6 | 1202 | 15.5 | 1384 |

DIVISION OF METRIC STRUCTURES

NOTE: ALL DIMENSIONS SHOWN IN MILLIMETERS, WITH THE EXCEPTION OF STATIONS AND ELEVATIONS, UNLESS OTHERWISE NOTED.

CABRINA M. DIETERS — STATE OF TENNESSEE — DEPARTMENT OF TRANSPORTATION

STATE OF TENNESSEE
DEPARTMENT OF TRANSPORTATION
BRIDGE NO. 2
PRESTRESSED BULB-TEE BEAM DETAILS
SPAN. NO. 1
COLLECTOR NO. 5
OVER
STATE ROUTE 115
STATION 5+334.806
KNOX COUNTY
2015

CORRECT Wayne J. Sieger
ENGINEER OF STRUCTURES

| | | | |
|---|---|---|---|
| DESIGNED BY | ALI OMAR | DATE | 06-15 |
| DRAWN BY | CHRIS STAPLER | DATE | 07-15 |
| SUPERVISED BY | BIRDWELL / C.M.D. | DATE | 07-15 |
| CHECKED BY | C. DIETERS | DATE | 09-15 |

U-73-85

TE1137F.DGN

CONST. NO. 47026-3279-14

| PROJECT NO. | YEAR | SHEET NO. |
|---|---|---|
| NH-115(54) | 2015 | |

REVISIONS

| NO. | DATE | BY | BRIEF DESCRIPTION |
|---|---|---|---|
| | | | |

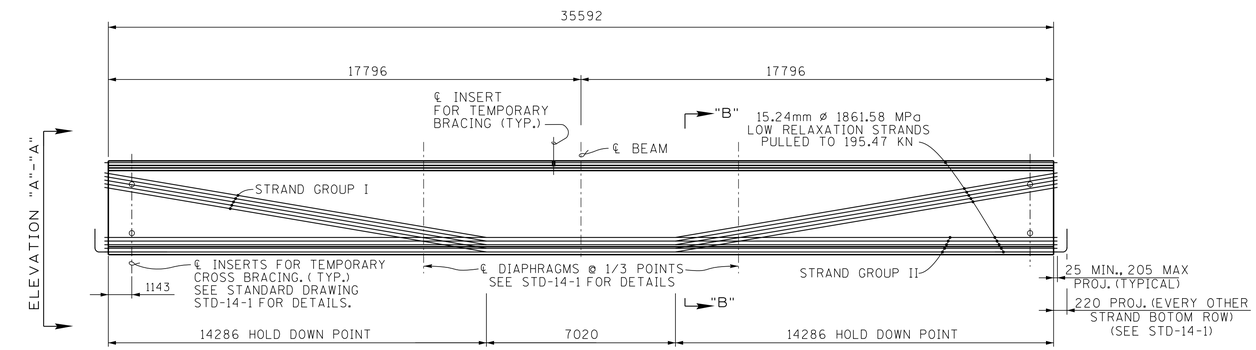


ELEVATION
(SHOWING PRESTRESSING STRANDS)

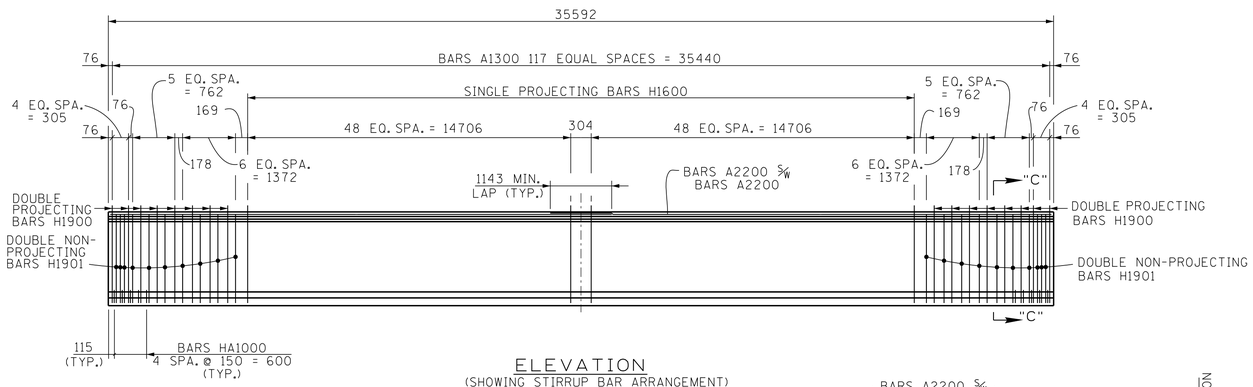


ELEVATION
(SHOWING STIRRUP BAR ARRANGEMENT)

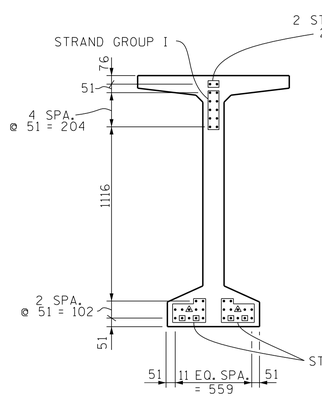


ELEVATION "A" - "A"
(SHOWING PRESTRESSING STRANDS @ ENDS)
(36 STRANDS)

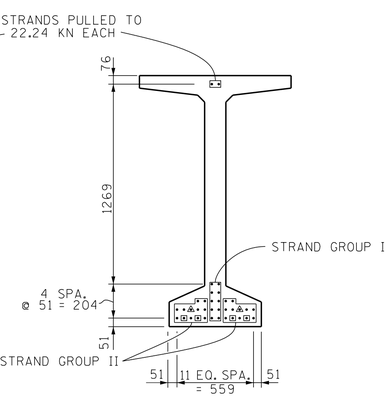


SECTION "B" - "B"
(SHOWING PRESTRESSING STRANDS @ MIDSPAN)
(36 STRANDS)

▲ DENOTES: BREAK BOND 914 FROM END OF BEAM
▣ DENOTES: BREAK BOND 1524 FROM END OF BEAM

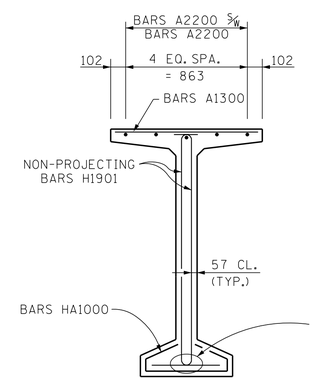


(SHOWING NON-PROJECTING BARS)

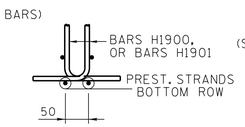


DETAIL "X"

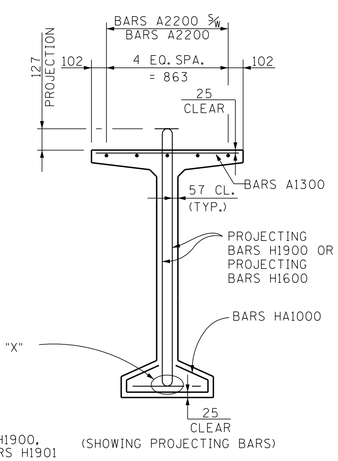


(SHOWING PROJECTING BARS)

SECTION "C" - "C"

## NOTES:

NOTE: SEE STD-14-1 FOR BULB-TEE BEAM STANDARD DETAILS, NOTES, AND REINFORCING.

ALL BEAMS TO BE BT-1600.

THE CONCRETE FOR THIS CONSTRUCTION SHALL BE OF SUCH PROPERTIES AS TO ATTAIN A COMPRESSIVE STRENGTH OF NOT LESS THAN 55.16 MPa AT THE AGE OF 28 DAYS AND STRESS TRANSFER SHALL NOT BE MADE TO THE BRIDGE MEMBER UNTIL THE TEST SPECIMENS INDICATE THAT THE CONCRETE HAS REACHED A COMPRESSIVE STRENGTH OF AT LEAST 48.27 MPa. SEE GENERAL NOTES FOR CONCRETE FINISHING NOTE.

ALL PRESTRESSING STRANDS SHALL BE 15.24mm DIAMETER ASTM GRADE 1861.58 MPa, 7 WIRE UNCOATED LOW RELAXATION PRESTRESSING STRANDS FULLY STRESSED UNLESS OTHERWISE NOTED.

NOTE: THE PRESTRESSED BEAMS SHALL ATTAIN AN AGE OF AT LEAST 90 DAYS PRIOR TO POURING THE SUPPORT DIAPHRAGMS (EXCLUDING BOTTOM 381) AND DECK SLAB.

## PRESTRESSED BEAM DESIGN DATA - PER BEAM

LIVE LOAD DISTRIBUTION FACTOR FOR MOMENT: 0.948 WHEELS
LIVE LOAD DISTRIBUTION FACTOR FOR SHEAR: 0.948 WHEELS
COMPOSITE DEAD LOAD: DC = 3.225 kN/M
COMPOSITE DEAD LOAD: DW = 3.867 kN/M
COMPOSITE DESIGN SLAB f'c = 20.68 MPa
NOTE: DOWNWARD DEFLECTION UNDER TOTAL DL IS NOT ALLOWED.

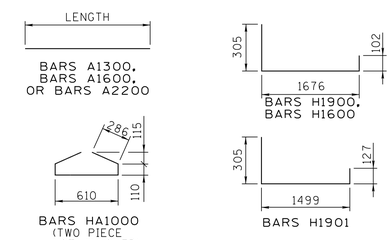


## BILL OF STEEL (PER BEAM)

| BAR | SIZE | NO. REQ'D | LENGTH |
|---|---|---|---|
| A1300 | 13 | 118 | 970 |
| A1600 | 16 | 6 | 1675 |
| A2200 | 22 | 10 | 18377 |
| H1600 | 16 | 98 | 2085 |
| H1900 | 19 | 32 | 2085 |
| H1901 | 19 | 40 | 1930 |
| HA1000 | 10 | 10 | 1400 |

## ESTIMATED QUANTITIES - PER BEAM

| NO. BEAMS REQ'D. | PRESTRESSING STRANDS (LOW RELAXATION) KG | CLASS "A" CONCRETE M3 | REINFORCING STEEL KG |
|---|---|---|---|
| 6 | 1430 | 16.4 | 1335 |

DIVISION OF METRIC STRUCTURES

CABRINA M. DIETERS — STATE OF TENNESSEE — AGRICULTURE

NOTE: ALL DIMENSIONS SHOWN IN MILLIMETERS, WITH THE EXCEPTION OF STATIONS AND ELEVATIONS, UNLESS OTHERWISE NOTED.

STATE OF TENNESSEE
DEPARTMENT OF TRANSPORTATION
BRIDGE NO. 2
PRESTRESSED BULB-TEE BEAM DETAILS
SPAN NO. 2
COLLECTOR NO. 5
OVER
STATE ROUTE 115
STATION 5+334.806
KNOX COUNTY
2015

CORRECT Wayne J. Sieger
ENGINEER OF STRUCTURES

DESIGNED BY ALI OMAR DATE 06-15
DRAWN BY CHRIS STAPLER DATE 07-15
SUPERVISED BY BIRDWELL / C.M.D. DATE 07-15
CHECKED BY C. DIETERS DATE 09-15

U-73-86

AB1137.DGN

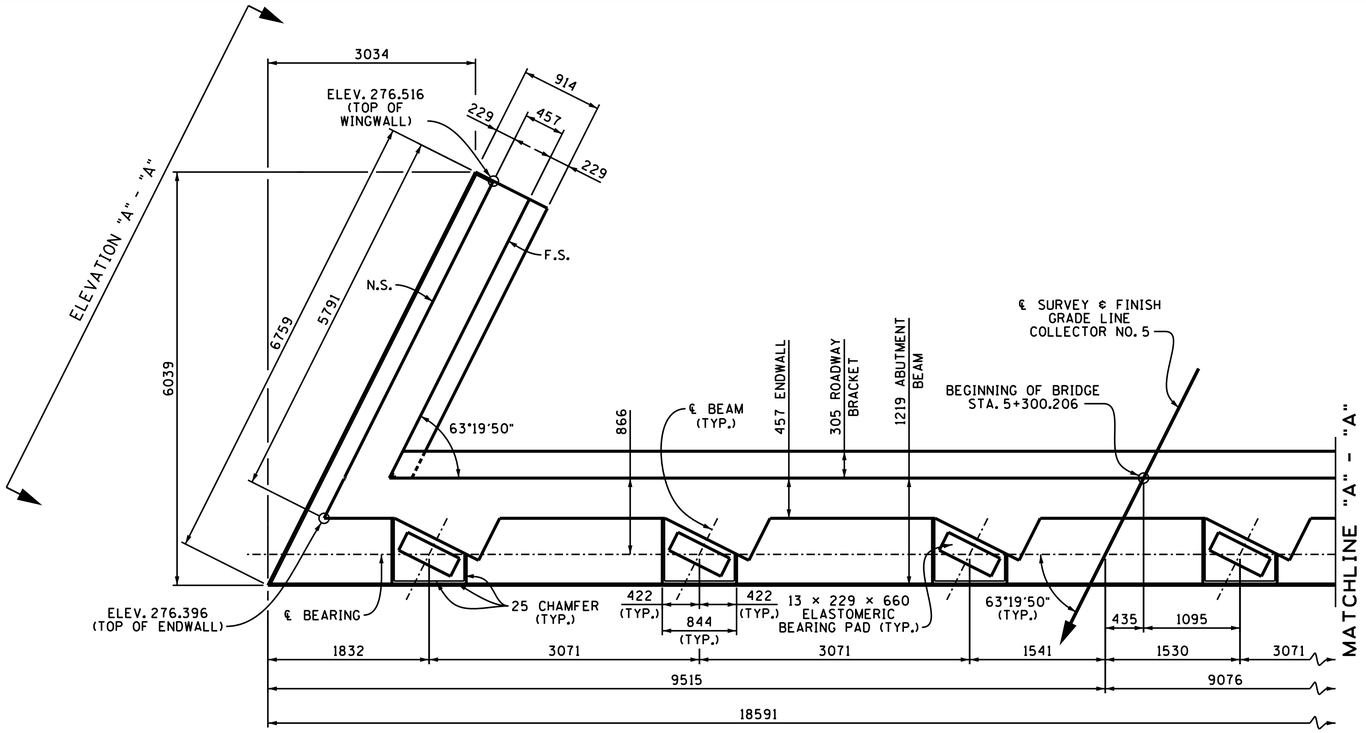


PLAN

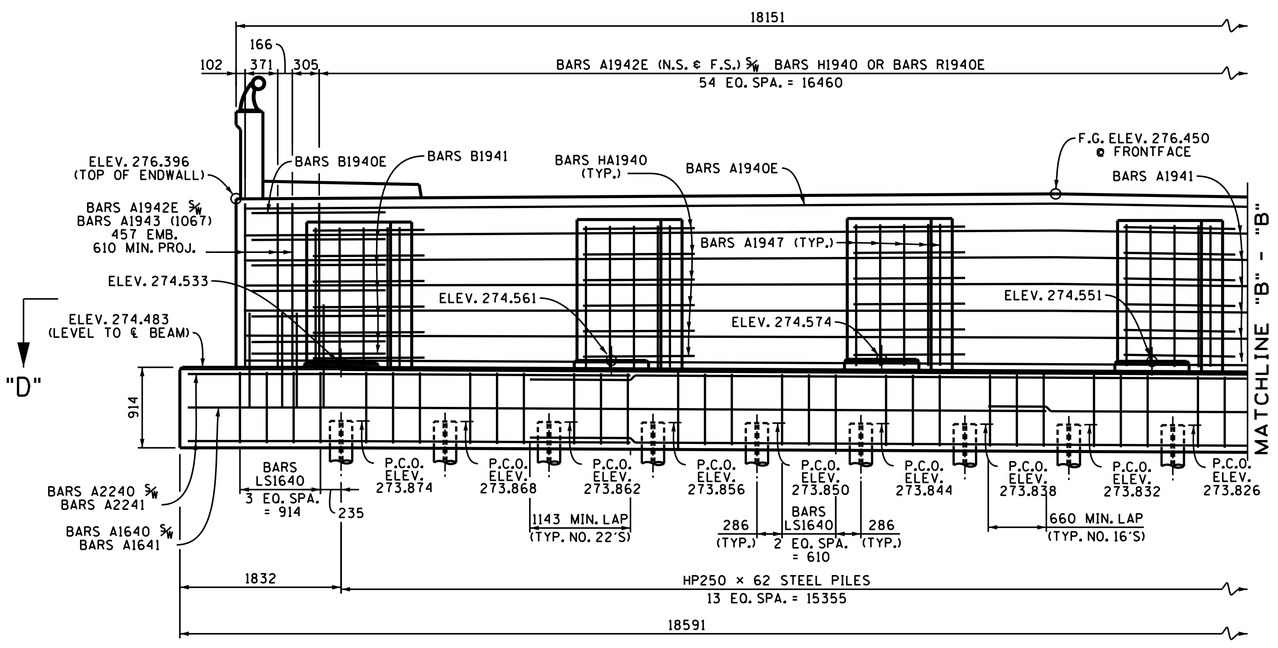


ELEVATON
(LOOKING BACK ON SURVEY)

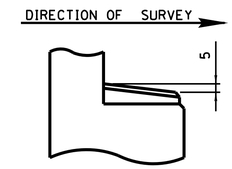


RISER BLOCK
SLOPE DETAIL

NOTE: RISER BLOCK BEARING PAD SURFACES TO CONFORM TO BOTTOM OF BEAM GRADE.

CONST. NO. 47026-3279-14

| PROJECT NO. | YEAR | |
|---|---|---|
| NH-115(54) | 2015 | |

| NO. | DATE | BY | |
|---|---|---|---|
| | | | |

## ABUTMENT GENERAL NOTES

NOTE: RISER BLOCKS TO BE POURED MONOLITHICALLY WITH ABUTMENT BEAM.
NOTE: WHEN POURING WINGWALLS, PROVISIONS SHALL BE MADE FOR SETTING REINFORCING STEEL FOR WINGPOST AND BRIDGE RAIL. FOR DETAILS OF WINGPOSTS AND BRIDGE RAIL, SEE STD. DWG. NO. STD-11-1.
NOTE: NOT LESS THAN HALF OF THE SLAB IN THE END SPAN SHALL BE POURED PRIOR TO, OR CONCURRENTLY WITH, PLACEMENT OF ANY PART OF THE ABUTMENT BACKWALL. AT LEAST THE TOP 12 INCHES OF THE BACKWALL SHALL BE POURED CONCURRENTLY WITH THE END OF SLAB.
NOTE: COST OF BRIDGE RAIL AND POST IS TO BE INCLUDED IN THE UNIT PRICE BID FOR BRIDGE RAIL SYSTEM.
NOTE: ELASTOMETRIC PADS SHALL BE IN PLACE A MINIMUM OF ONE DAY BEFORE BEING DISTURBED BY SETTING GIRDERS. PLACE RUBBER BONDING CEMENT IN SUCH A WAY THAT VISIBLE CONCRETE SURFACES WILL NOT BE STAINED.
NOTE: WINGBEAM PILES SHALL BE DRIVEN TO THE PLANS TIP ELEVATIONS OR REFUSAL. SEISMIC ATTACHMENT IS NOT REQUIRED FOR WINGBEAM PILES.
NOTE: SEE STANDARD DRAWING STD-6-1 FOR PILE DETAILS AND NOTES.

NOTE: FOR ELEVATION "A"-"A"; ELEVATION "B"-"B" & SECTION "D"-"D" SEE DWG NO. U-73-89.

N.S. DENOTES: NEAR SIDE
F.S. DENOTES: FAR SIDE
P.C.O. DENOTES: PILE CUT-OFF

DIVISION OF STRUCTURES METRIC

NOTE: ALL DIMENSIONS SHOWN IN MILLIMETERS, WITH THE EXCEPTION OF STATIONS AND ELEVATIONS, UNLESS OTHERWISE NOTED.

| ESTIMATED QUANTITIES | | |
|---|---|---|
| CLASS "A" CONCRETE (BRIDGES) $M^3$ | STEEL BAR REINFORCEMENT (BRIDGES) KG. | EPOXY COATED REINFORCING STEEL (BRIDGES) KG. |
| 61 | 3778 | 1137 |

STATE OF TENNESSEE
DEPARTMENT OF TRANSPORTATION
BRIDGE NO. 2
ABUTMENT NO. 1
COLLECTOR NO. 5
OVER
STATE ROUTE 115
STATION 5+334.806
KNOX COUNTY
2015

CARMINA M. DIETERS
STATE OF TENNESSEE
REGISTERED ENGINEER
AGRICULTURE
NO. 115371

CORRECT Wayne G. Sieper
ENGINEER OF STRUCTURES

| | | | |
|---|---|---|---|
| DESIGNED BY | ALI OMAR | DATE | 09-14 |
| DRAWN BY | RODNEY CHANDLER | DATE | 08-15 |
| SUPERVISED BY | J.W.F. / BIRDWELL | DATE | 08-15 |
| CHECKED BY | C. DIETERS | DATE | 09-15 |

U-73-87

AB1137.DGN

| CONST. NO. | 47026-3279-14 | |
|---|---|---|
| PROJECT NO. | YEAR | |
| NH-115(54) | 2015 | |

| NO. | DATE | BY | |
|---|---|---|---|
| | | | |

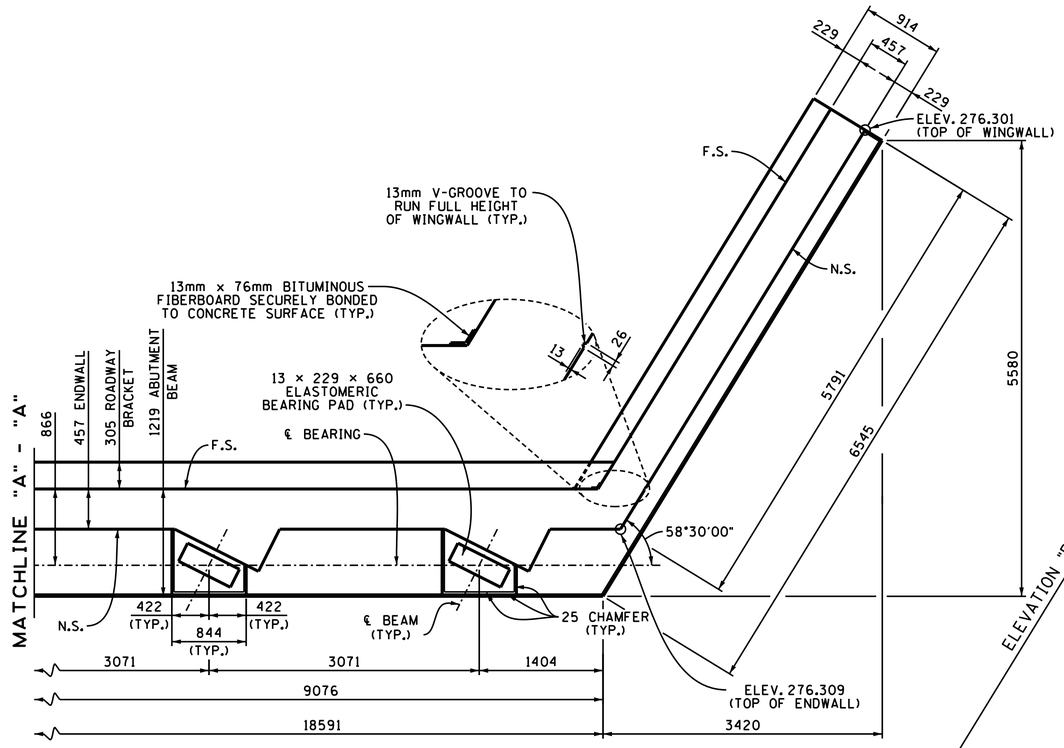


PLAN

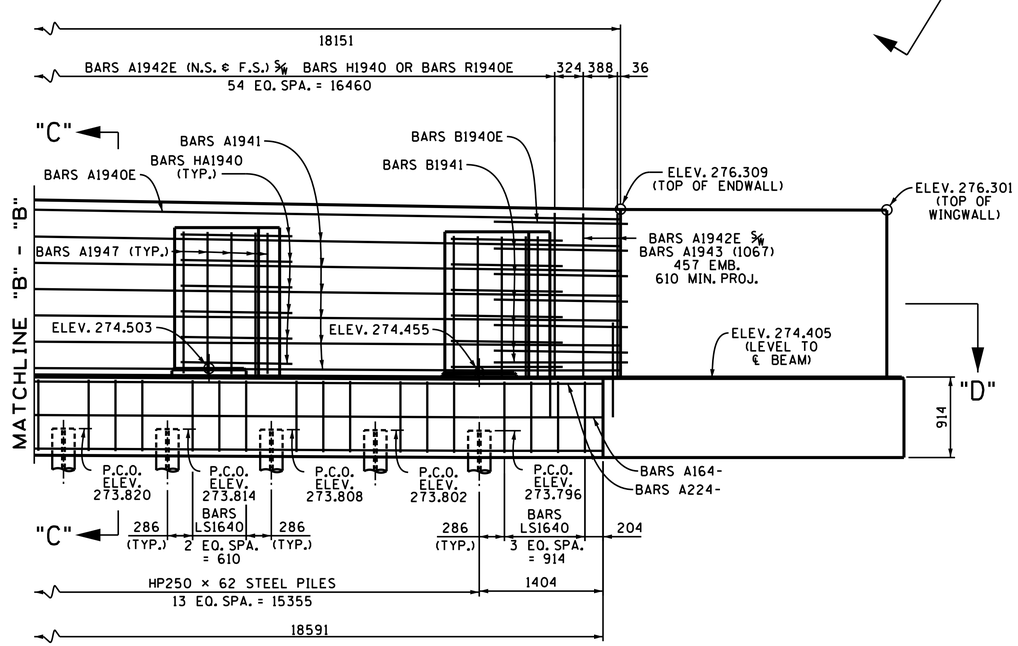


ELEVATON
(LOOKING BACK ON SURVEY)

N.S. DENOTES: NEAR SIDE
F.S. DENOTES: FAR SIDE
P.C.O. DENOTES: PILE CUT-OFF

ELEVATION "B" - "B"

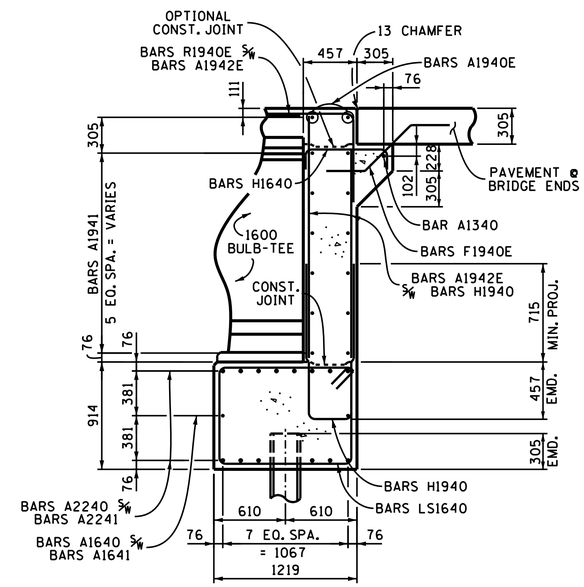


SECTION "C" - "C"

NOTE: ALL DIMENSIONS SHOWN IN MILLIMETERS, WITH THE EXCEPTION OF STATIONS AND ELEVATIONS, UNLESS OTHERWISE NOTED.

STATE OF TENNESSEE
DEPARTMENT OF TRANSPORTATION

BRIDGE NO. 2
ABUTMENT NO. 1 DETAILS
COLLECTOR NO. 5
OVER
STATE ROUTE 115
STATION 5+334.806
KNOX COUNTY
2015

CORRECT

| | | | |
|---|---|---|---|
| DESIGNED BY | ALI OMAR | DATE | 09-14 |
| DRAWN BY | RODNEY CHANDLER | DATE | 08-15 |
| SUPERVISED BY | J.W.F. / BIRDWELL | DATE | 08-15 |
| CHECKED BY | C. DIETERS | DATE | 09-15 |

U-73-88

AB1137.DGN

| CONST. NO. | 47026-3279-14 | |
|---|---|---|
| PROJECT NO. | YEAR | |
| NH-115(54) | 2015 | |

| NO. | DATE | BY | |
|---|---|---|---|
| | | | |

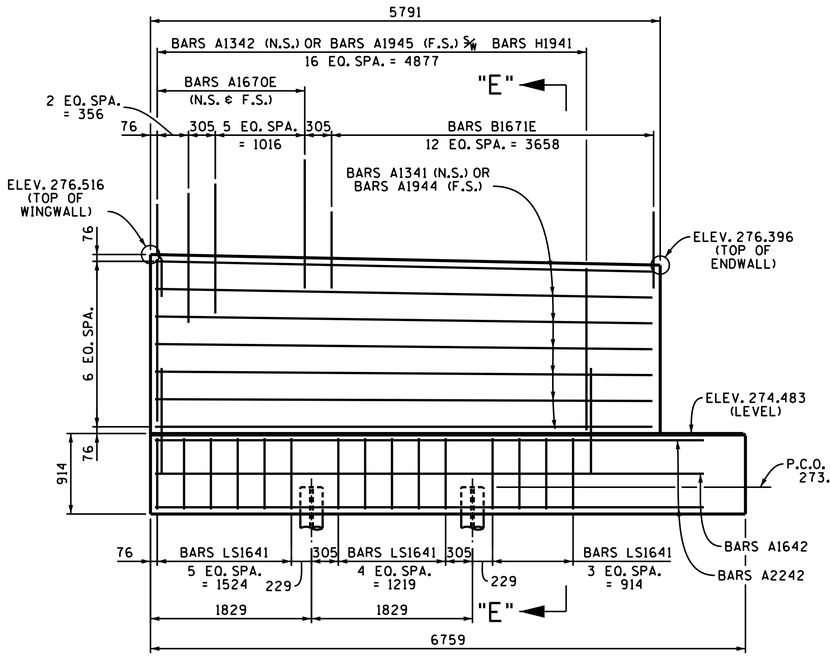


ELEVATON "A"-"A"

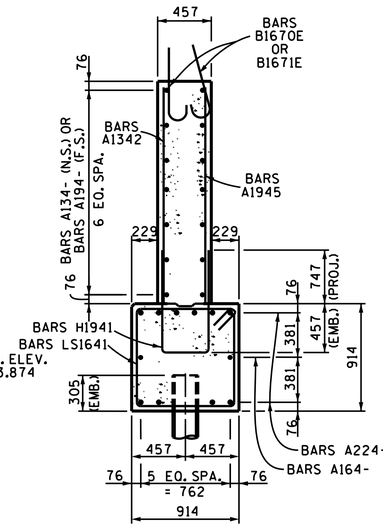


SECTION "E" - "E"

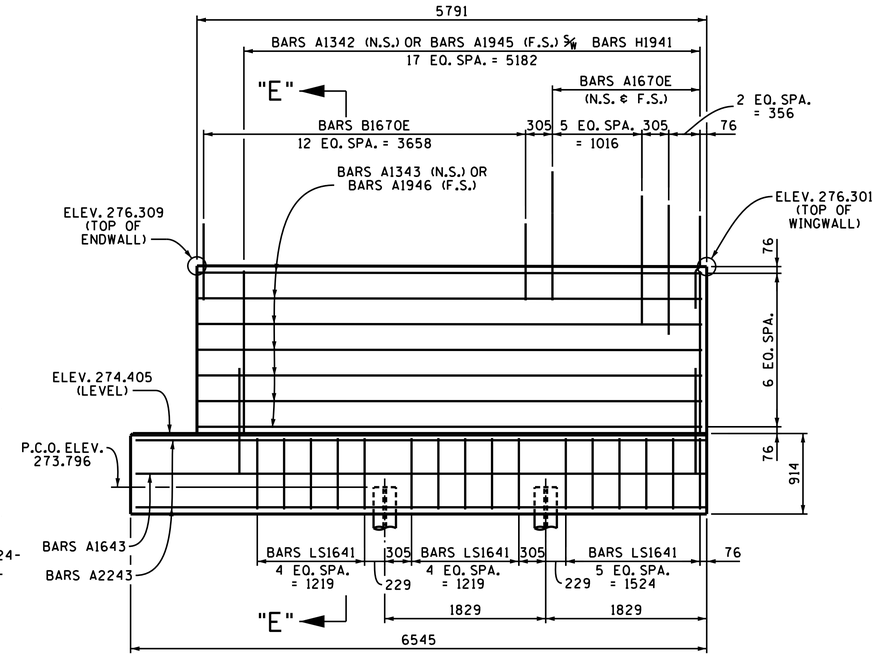


ELEVATON "B"-"B"

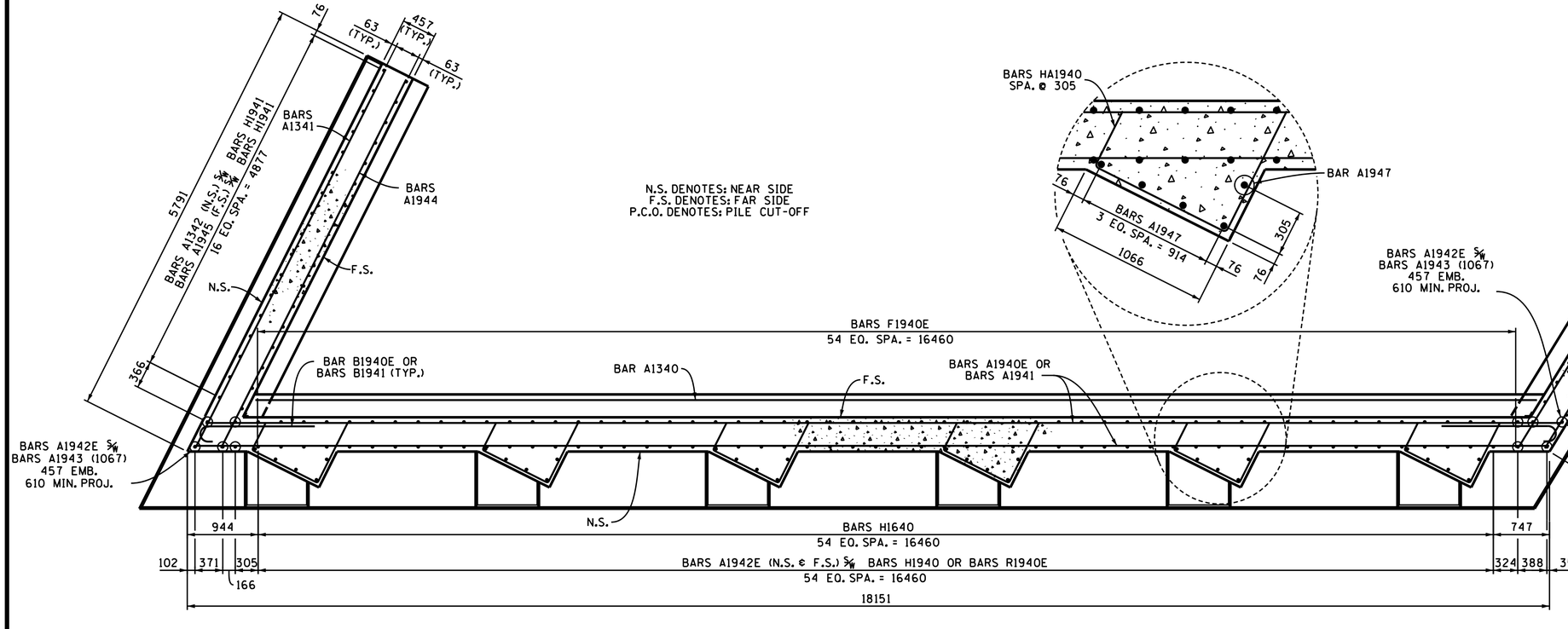


SECTION "D" - "D"

NOTE: ALL DIMENSIONS SHOWN IN MILLIMETERS, WITH THE EXCEPTION OF STATIONS AND ELEVATIONS, UNLESS OTHERWISE NOTED.

STATE OF TENNESSEE
**DEPARTMENT OF TRANSPORTATION**

# BRIDGE NO. 2
# ABUTMENT NO. 1 DETAILS
# COLLECTOR NO. 5
# OVER
# STATE ROUTE 115
# STATION 5+334.806
# KNOX COUNTY
# 2015

| | | | |
|---|---|---|---|
| DESIGNED BY | ALI OMAR | DATE | 09-14 |
| DRAWN BY | RODNEY CHANDLER | DATE | 08-15 |
| SUPERVISED BY | J.W.F. / BIRDWELL | DATE | 08-15 |
| CHECKED BY | C. DIETERS | DATE | 09-15 |

CORRECT _____
ENGINEER OF STRUCTURES

U-73-89

AB1137.DGN

| CONST. NO. | 47026-3279-14 | |
|---|---|---|
| PROJECT NO. | YEAR | |
| NH-115(54) | 2015 | |

| NO. | DATE | BY | |
|---|---|---|---|
| | | | |

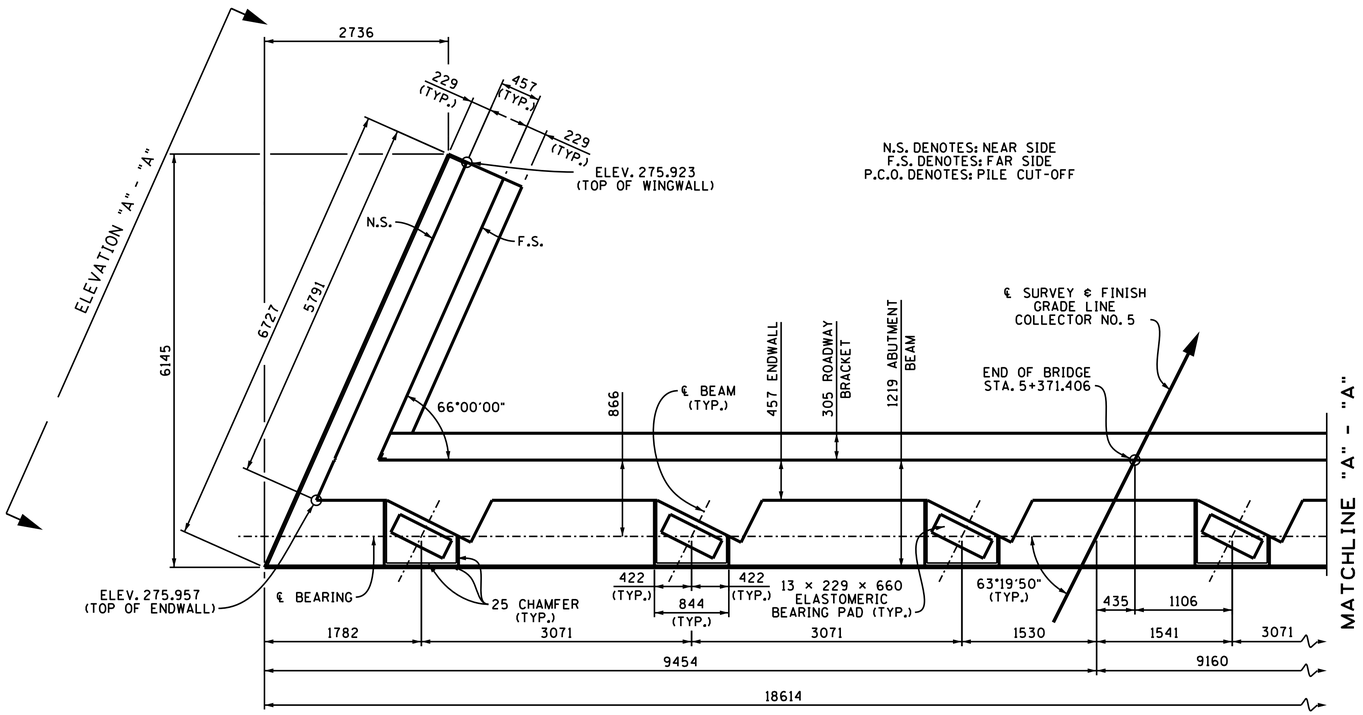


PLAN

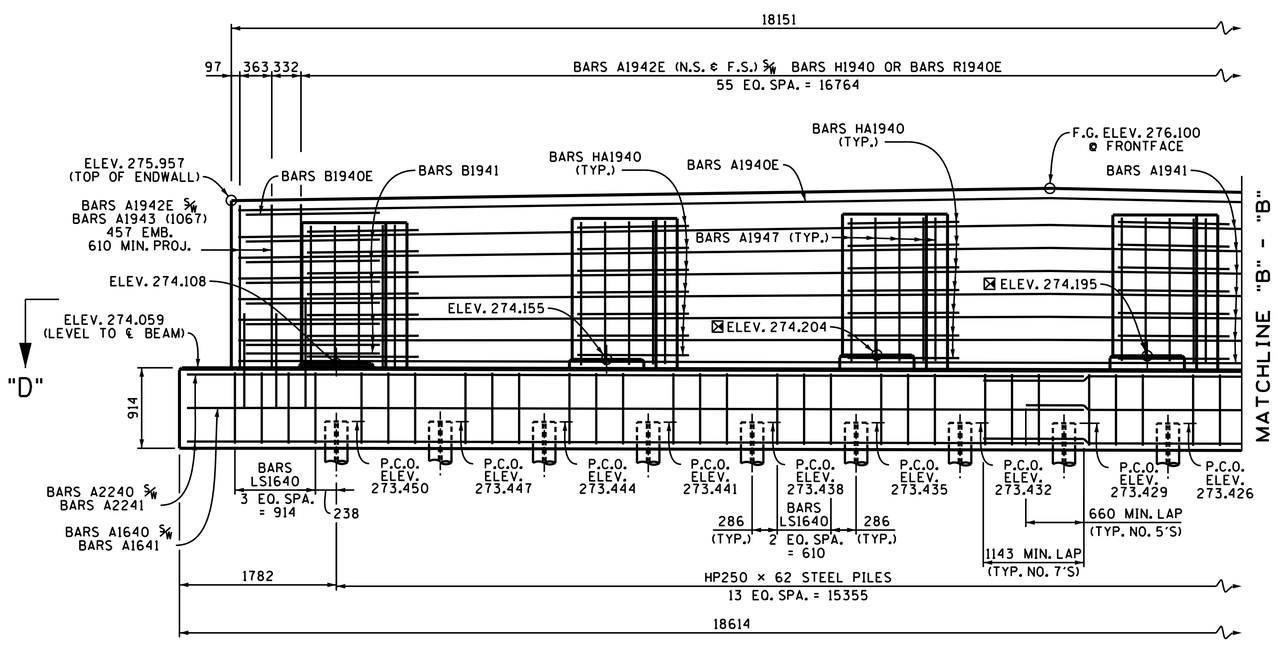


ELEVATON
(LOOKING FORWARD ON SURVEY)

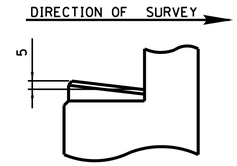


RISER BLOCK SLOPE DETAIL

NOTE: RISER BLOCK BEARING PAD SURFACES TO CONFORM TO BOTTOM OF BEAM GRADE.

## ABUTMENT GENERAL NOTES

NOTE: RISER BLOCKS TO BE POURED MONOLITHICALLY WITH ABUTMENT BEAM.
NOTE: WHEN POURING WINGWALLS, PROVISIONS SHALL BE MADE FOR SETTING REINFORCING STEEL FOR WINGPOST AND BRIDGE RAIL. FOR DETAILS OF WINGPOSTS AND BRIDGE RAIL, SEE STD. DWG. NO. STD-11-1.
NOTE: NOT LESS THAN HALF OF THE SLAB IN THE END SPAN SHALL BE POURED PRIOR TO, OR CONCURRENTLY WITH, PLACEMENT OF ANY PART OF THE ABUTMENT BACKWALL. AT LEAST THE TOP 12 INCHES OF THE BACKWALL SHALL BE POURED CONCURRENTLY WITH THE END OF SLAB.
NOTE: COST OF BRIDGE RAIL AND POST IS TO BE INCLUDED IN THE UNIT PRICE BID FOR BRIDGE RAIL SYSTEM.
NOTE: ELASTOMETRIC PADS SHALL BE IN PLACE A MINIMUM OF ONE DAY BEFORE BEING DISTURBED BY SETTING GIRDERS. PLACE RUBBER BONDING CEMENT IN SUCH A WAY THAT VISIBLE CONCRETE SURFACES WILL NOT BE STAINED.
NOTE: WINGBEAM PILES SHALL BE DRIVEN TO THE PLANS TIP ELEVATIONS OR REFUSAL. SEISMIC ATTACHMENT IS NOT REQUIRED FOR WINGBEAM PILES.
NOTE: SEE STANDARD DRAWING STD-6-1 FOR PILE DETAILS AND NOTES.

NOTE: FOR ELEVATION "A"-"A"; ELEVATION "B"-"B" & SECTION "D"-"D" SEE DWG NO. U-73-92.

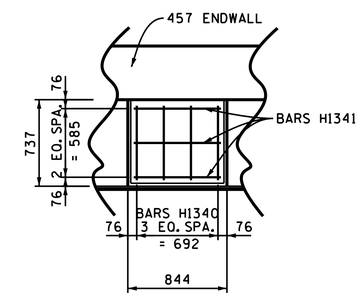


PLAN

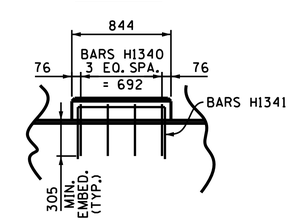


ELEVATION

REINFORCED RISER BLOCK DETAILS

NOTE: ALL DIMENSIONS SHOWN IN MILLIMETERS, WITH THE EXCEPTION OF STATIONS AND ELEVATIONS, UNLESS OTHERWISE NOTED.

| ESTIMATED QUANTITIES | | |
|---|---|---|
| CLASS "A" CONCRETE (BRIDGES) m³ | STEEL BAR REINFORCEMENT (BRIDGES) KG. | EPOXY COATED REINFORCING STEEL (BRIDGES) KG. |
| 61 | 3897 | 1141 |

⊠ DENOTES: SEE REINFORCED RISER BLOCK DETAILS

STATE OF TENNESSEE
DEPARTMENT OF TRANSPORTATION
BRIDGE NO. 2
ABUTMENT NO. 2
COLLECTOR NO. 5
OVER
STATE ROUTE 115
STATION 5+334.806
KNOX COUNTY
2015

CORRECT _____ ENGINEER OF STRUCTURES

| | | | |
|---|---|---|---|
| DESIGNED BY | ALI OMAR | DATE | 09-14 |
| DRAWN BY | RODNEY CHANDLER | DATE | 08-15 |
| SUPERVISED BY | J.W.F. / BIRDWELL | DATE | 08-15 |
| CHECKED BY | C. DIETERS | DATE | 09-15 |

U-73-90

AB1137.DGN

| CONST. NO. | 47026-3279-14 | |
|---|---|---|
| PROJECT NO. | YEAR | |
| NH-115(54) | 2015 | |

| NO. | DATE | BY | |
|---|---|---|---|
| | | | |

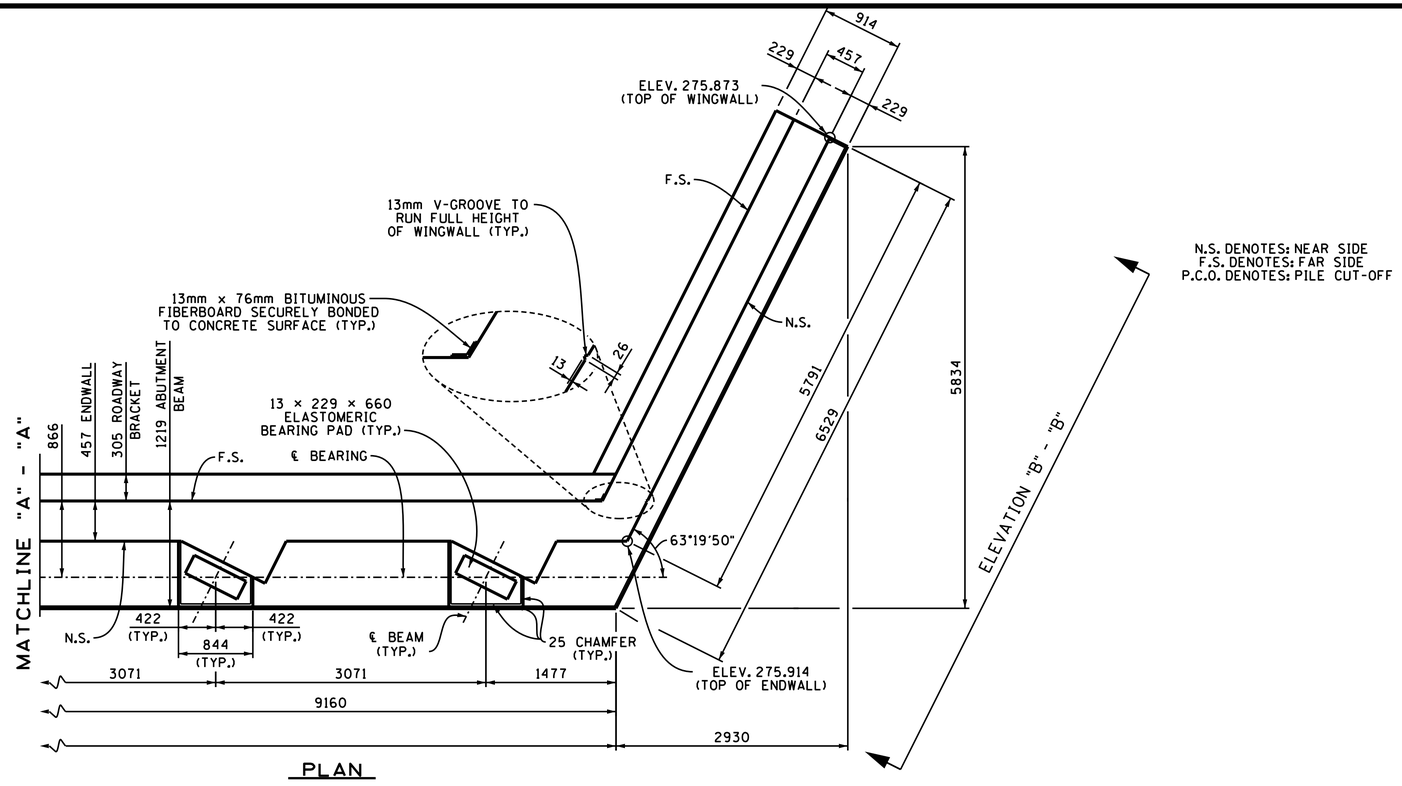


N.S. DENOTES: NEAR SIDE
F.S. DENOTES: FAR SIDE
P.C.O. DENOTES: PILE CUT-OFF

PLAN

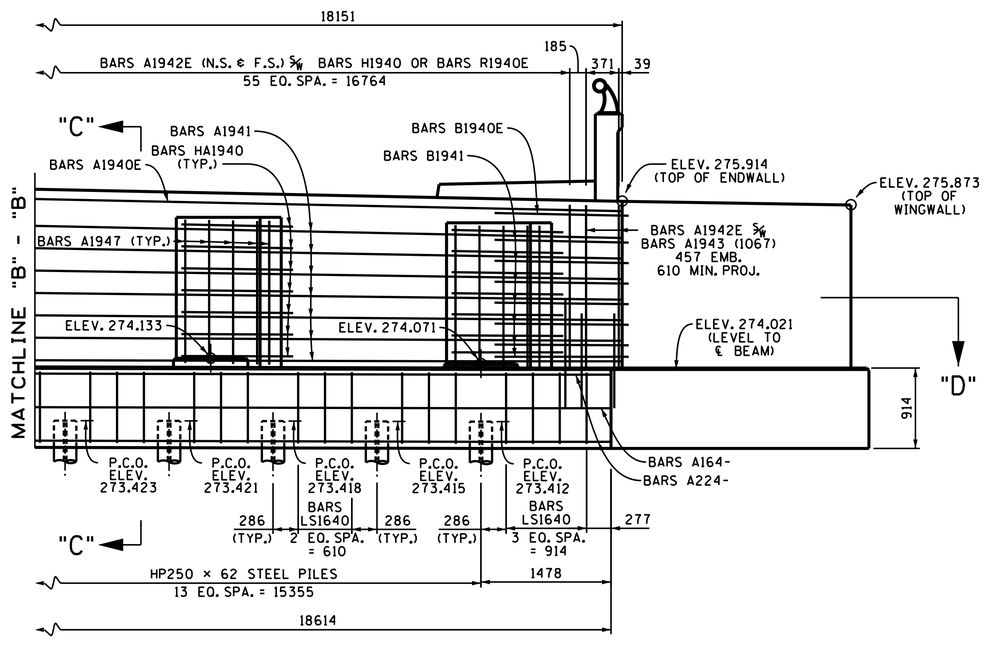


ELEVATON
(LOOKING FORWARD ON SURVEY)

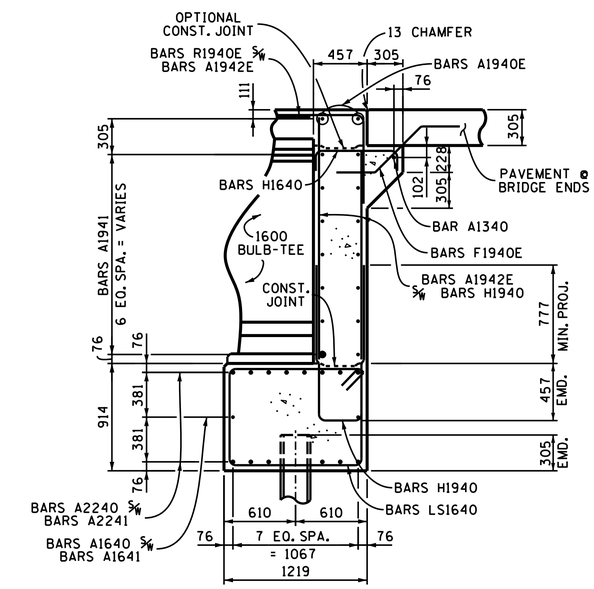


SECTION "C" - "C"

NOTE: ALL DIMENSIONS SHOWN IN MILLIMETERS, WITH THE EXCEPTION OF STATIONS AND ELEVATIONS, UNLESS OTHERWISE NOTED.

STATE OF TENNESSEE
DEPARTMENT OF TRANSPORTATION

BRIDGE NO. 2
ABUTMENT NO. 2 DETAILS
COLLECTOR NO. 5
OVER
STATE ROUTE 115
STATION 5+334.806
KNOX COUNTY
2015

CARMINA M. DIETERS
STATE OF TENNESSEE
No. 102371

CORRECT Wayne A. Sayer
ENGINEER OF STRUCTURES

| | | | |
|---|---|---|---|
| DESIGNED BY | ALI OMAR | DATE | 09-14 |
| DRAWN BY | RODNEY CHANDLER | DATE | 08-15 |
| SUPERVISED BY | J.W.F. / BIRDWELL | DATE | 08-15 |
| CHECKED BY | C. DIETERS | DATE | 09-15 |

U-73-91

AB1137.DGN

| CONST. NO. | 47026-3279-14 | |
|---|---|---|
| PROJECT NO. | YEAR | |
| NH-115(54) | 2015 | |

| NO. | DATE | BY | |
|---|---|---|---|
| | | | |

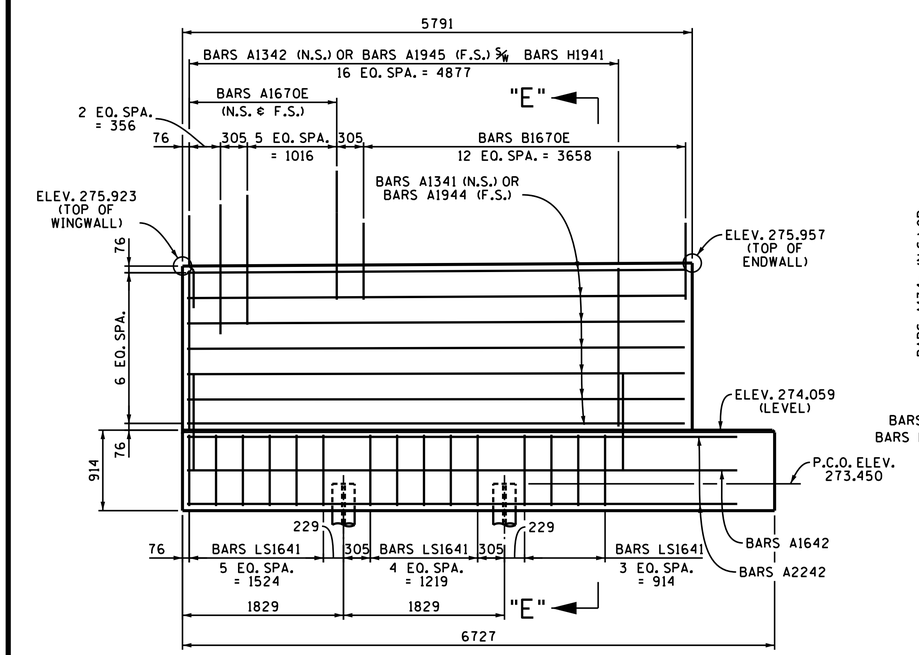


ELEVATON "A"-"A"

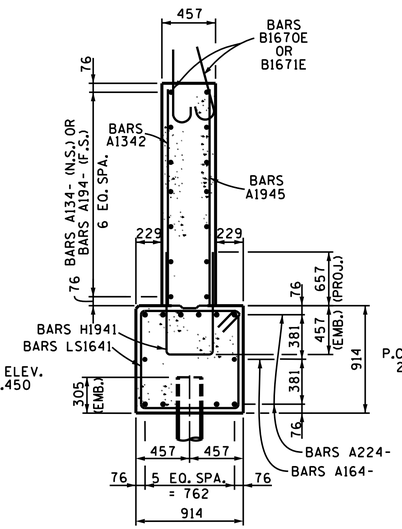


SECTION "E" - "E"

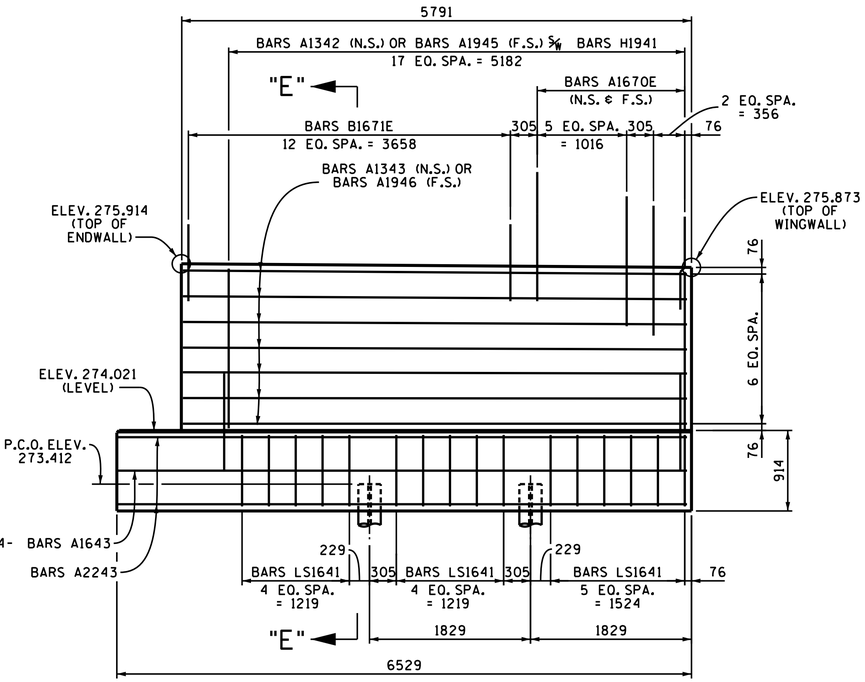


ELEVATON "B"-"B"

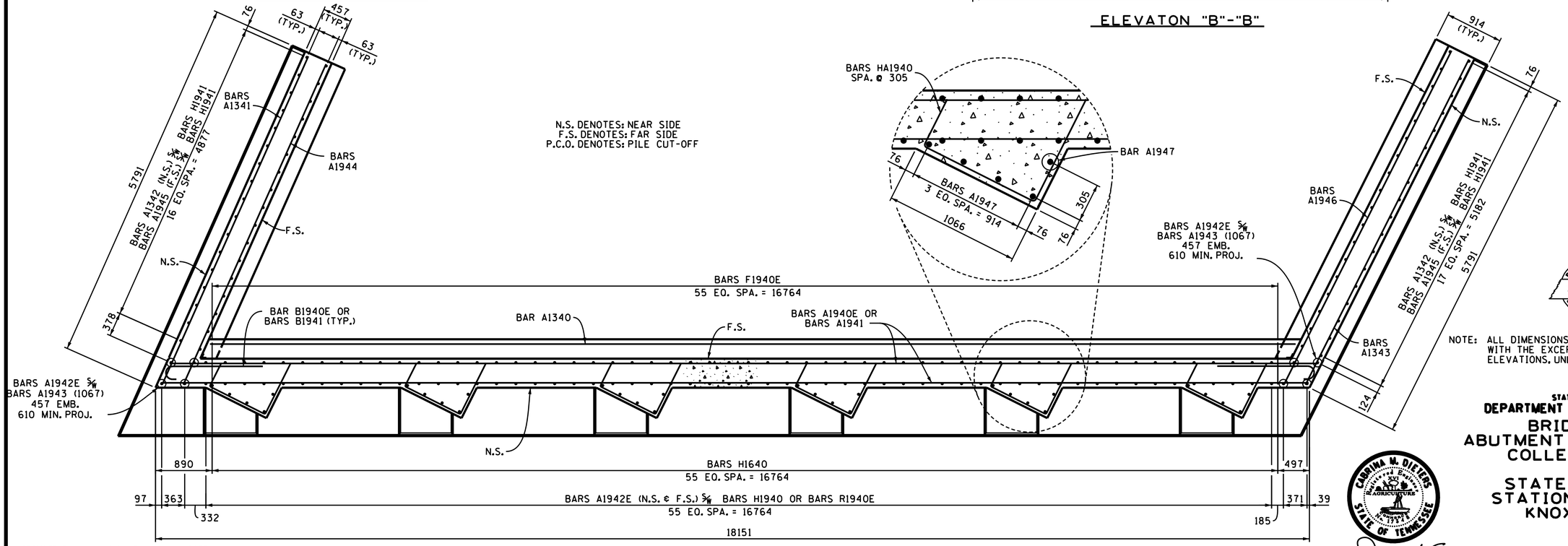


SECTION "D" - "D"

NOTE: ALL DIMENSIONS SHOWN IN MILLIMETERS. WITH THE EXCEPTION OF STATIONS AND ELEVATIONS, UNLESS OTHERWISE NOTED.

STATE OF TENNESSEE
DEPARTMENT OF TRANSPORTATION

BRIDGE NO. 2
ABUTMENT NO. 2 DETAILS
COLLECTOR NO. 5
OVER
STATE ROUTE 115
STATION 5+334.806
KNOX COUNTY
2015

| | | | |
|---|---|---|---|
| DESIGNED BY | ALI OMAR | DATE | 09-14 |
| DRAWN BY | RODNEY CHANDLER | DATE | 08-15 |
| SUPERVISED BY | J.W.F. / BIRDWELL | DATE | 08-15 |
| CHECKED BY | C. DIETERS | DATE | 09-15 |

CORRECT
ENGINEER OF STRUCTURES

U-73-92

AB1137.DGN

CONST. NO. 47026-3279-14

| PROJECT NO. | YEAR | SHEET NO. |
|---|---|---|
| NH-115(54) | 2015 | |

REVISIONS

| NO. | DATE | BY | BRIEF DESCRIPTION |
|---|---|---|---|
| | | | |

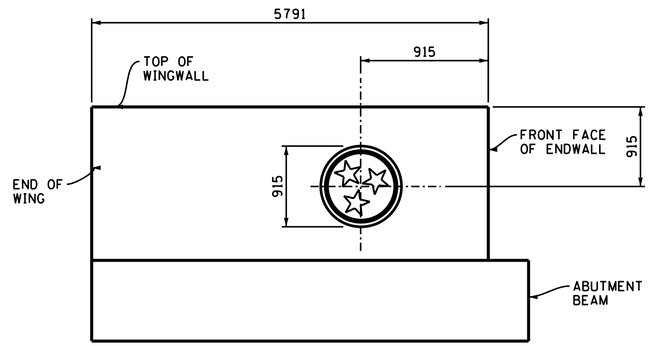


ABUTMENT TREATMENT
(WINGWALL ELEVATION)

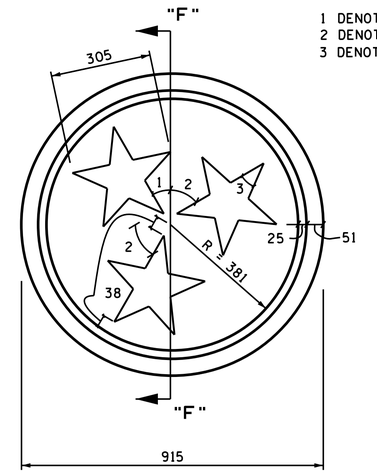


1 DENOTES: 30°
2 DENOTES: 60°
3 DENOTES: 36° (TYP.)

ARCHITECTURAL TREATMENT
3 STAR SYMBOL FORM DETAIL

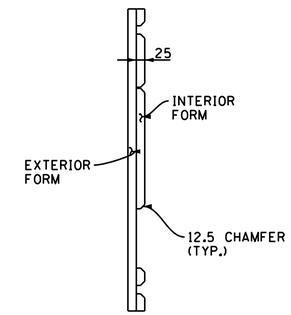


SECTION "F"-"F"

NOTES:

STATE SYMBOL TO BE "EMBOSSED" INTO THE CONCRETE.

STATE SYMBOL IS TO BE PAINTED.

PAINTING STATE SEAL:

THE STATE SEAL SHALL BE PAINTED WITH THE FOLLOWING PAINTS OR APPROVED EQUAL. IF THE CONTRACTOR ELECTS USE OF AN APPROVED EQUAL PAINT FROM A DIFFERENT COMPANY, IT SHALL BE A MARINE ACRYLIC GLASS PAINT WITH A SIMILAR COLOR AND PAINT PROPERTIES. A COLOR SAMPLE SHALL BE SUBMITTED TO THE ENGINEER FOR APPROVAL. THE COST OF THE PREPARATION OF SURFACES, PAINT, SEALER, SEALING THE PAINTED SURFACES, AND ALL LABOR REQUIRED FOR PAINTING THE STATE SEAL SHALL BE INCLUDED IN ITEMS BID ON.

| | |
|---|---|
| RED | SHERWIN WILLIAMS SHER-CRYL HPA HIGH PERFORMANCE ACRYLIC GLOSS "SAFETY RED"<br>B66 R300<br>6403-31922 |
| WHITE | SHERWIN WILLIAMS SHER-CRYL HPA HIGH PERFORMANCE ACRYLIC GLASS "FLAG WHITE"<br>B66 T304<br>6401-74215 |
| BLUE | SHERWIN WILLIAMS SHER-CRYL HPA HIGH PERFORMANCE ACRYLIC GLASS "FLAG BLUE"<br>B66 T304<br>6401-74215 |
| CLEAR COAT | WATERBORNE ACRYLIC CLEAR COAT CLEAR GLOSS<br>B66 C 375<br>6403-60111 |

N.S. DENOTES: NEAR SIDE
F.S. DENOTES: FAR SIDE

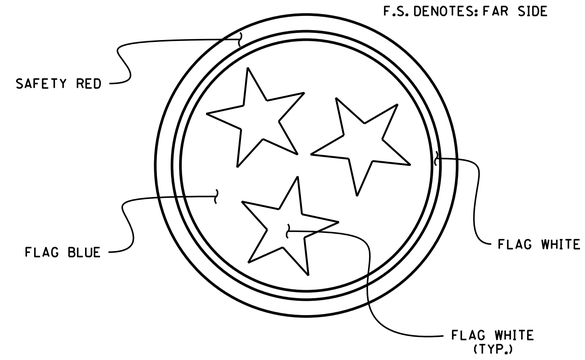


PAINTING DETAIL
LOCATION OF COLORS

NOTE: ALL DIMENSIONS SHOWN IN MILLIMETERS, WITH THE EXCEPTION OF STATIONS AND ELEVATIONS, UNLESS OTHERWISE NOTED.

STATE OF TENNESSEE
DEPARTMENT OF TRANSPORTATION

BRIDGE NO. 2
DECORATIVE SURFACE FINISH
AT ABUTMENTS
COLLECTOR NO. 5
OVER
STATE ROUTE 115
STATION 112+065.302
KNOX COUNTY
2015

CARMINA M. DIETERS
STATE OF TENNESSEE

CORRECT Wayne J. Sieger
ENGINEER OF STRUCTURES

| | | | |
|---|---|---|---|
| DESIGNED BY | ALI OMAR | DATE | 09-14 |
| DRAWN BY | RODNEY CHANDLER | DATE | 08-15 |
| SUPERVISED BY | J.W.F./BIRDWELL | DATE | 08-15 |
| CHECKED BY | C. DIETERS | DATE | 09-15 |

U-73-93

BP1137F.DGN

CONST. NO. 47026-3279-14

| PROJECT NO. | YEAR | SHEET NO. |
|---|---|---|
| NH-115(54) | 2015 | |

REVISIONS

| NO. | DATE | BY | BRIEF DESCRIPTION |
|---|---|---|---|
| | | | |

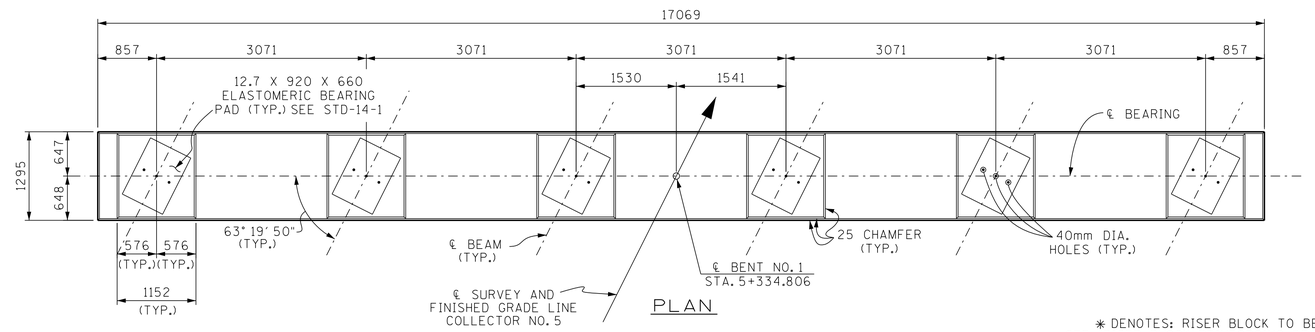


PLAN

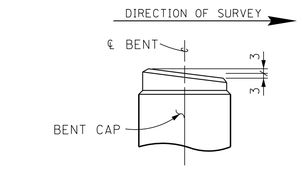


RISER BLOCK SLOPE DETAIL

(RISER BLOCK BEARING PAD SURFACE TO CONFORM TO BOTTOM OF BEAM GRADE)

NOTE: WHEN POURING CAP BEAM, PROVISIONS SHALL BE MADE FOR SETTING ANCHOR BOLTS. SEE STANDARD DRAWING STD-6-1. BOLT PROJECTION 279mm.

NOTE: RISER BLOCKS TO BE POURED MONOLITHICALLY WITH CAP BEAM.

NOTE: ELASTOMERIC PADS SHALL BE IN PLACE A MINIMUM OF ONE DAY BEFORE BEING DISTURBED BY SETTING BEAMS ON CONCRETE. PLACE RUBBER BONDING CEMENT IN SUCH A WAY THAT VISIBLE CONCRETE SURFACES WILL NOT BE STAINED.

NOTE: COLUMN STEEL TO EXTEND 1372 mm INTO CAP BEAM.

NOTE: FOR SECTIONS "A"-'A', "B"-"B", "C"-"C", "D"-"D" AND PLAN OF FOOTING, SEE DRAWING NO. U-73-95.

✱ DENOTES: RISER BLOCK TO BE REINFORCED. SEE "RISER BLOCK REINFORCING DETAIL" ON THIS SHEET.

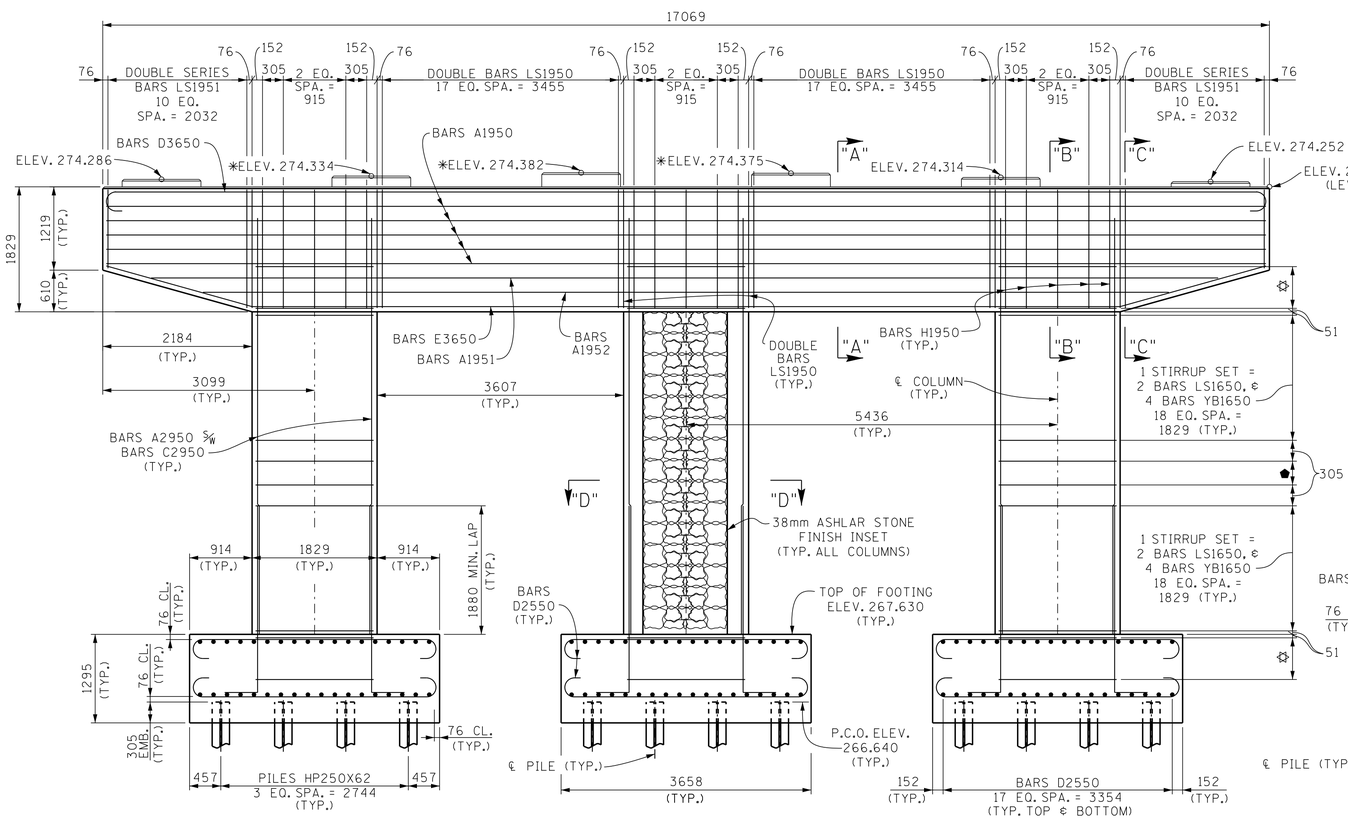


ELEVATION

(LOOKING FORWARD ON SURVEY)

✡ DENOTES: 1 STIRRUP SET = 2 BARS LS1650, & 4 BARS YB1650 6 EQ. SPA. = 610 (TYP.)

⬟ DENOTES: 1 STIRRUP SET = 2 BARS LS1650, & 4 BARS YB1650 2 EQ. SPA. = 348 (TYP.)

P.C.O. DENOTES: PILE CUT-OFF

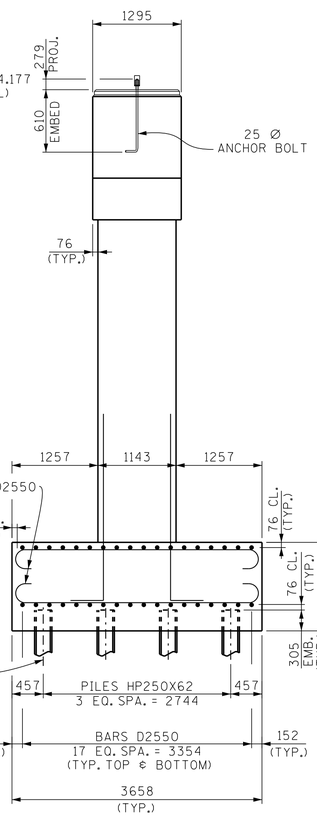


END ELEVATION

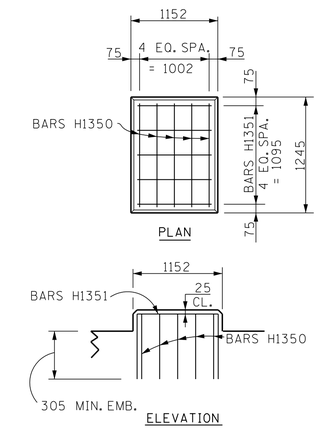


RISER BLOCK REINFORCING DETAIL

| ESTIMATED QUANTITIES | |
|---|---|
| CLASS "A" CONCRETE (BRIDGES) M3 | REINFORCING STEEL (BRIDGES) KG |
| 122 | 15624 |

NOTE: ALL DIMENSIONS SHOWN IN MILLIMETERS, WITH THE EXCEPTION OF STATIONS AND ELEVATIONS, UNLESS OTHERWISE NOTED.

STATE OF TENNESSEE
DEPARTMENT OF TRANSPORTATION

BRIDGE NO. 2
BENT NO. 1
COLLECTOR NO. 5
OVER
STATE ROUTE 115
STATION 5+334.806
KNOX COUNTY
2015

CORRECT ENGINEER OF STRUCTURES

DESIGNED BY ADAM PRICE DATE 12-14
DRAWN BY CHRIS STAPLER DATE 08-15
SUPERVISED BY C.M.D./BIRDWELL DATE 08-15
CHECKED BY C. DIETERS DATE 09-15

U-73-94

BP1137F.DGN

CONST. NO. 47026-3279-14

| PROJECT NO. | YEAR | SHEET NO. |
|---|---|---|
| NH-115(54) | 2015 | |

REVISIONS

| NO. | DATE | BY | BRIEF DESCRIPTION |
|---|---|---|---|
| | | | |

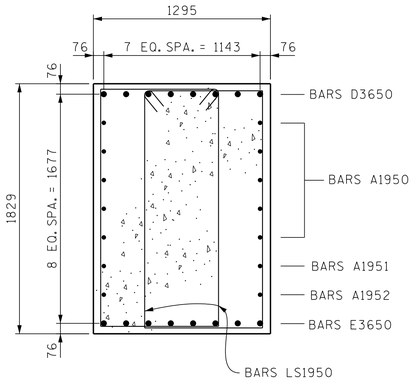


SECTION "A"-"A"

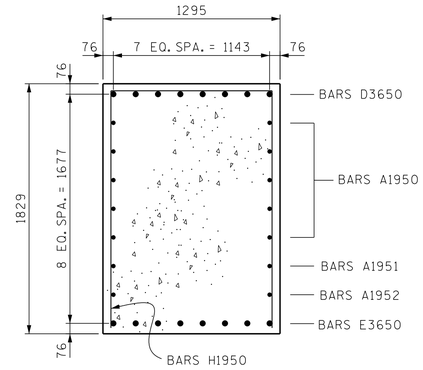


SECTION "B"-"B"

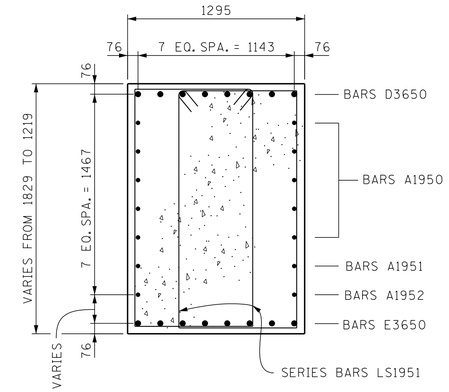


SECTION "C"-"C"

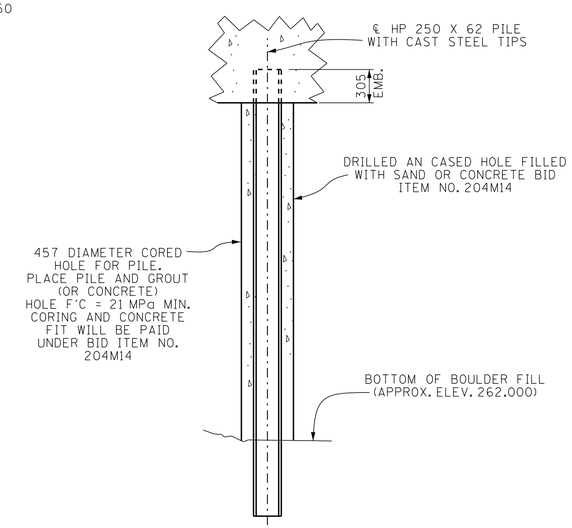


PREDRILLED END BEARING PILE DETAIL

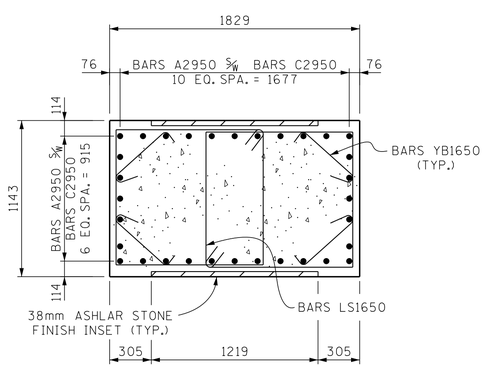


SECTION "D"-"D"

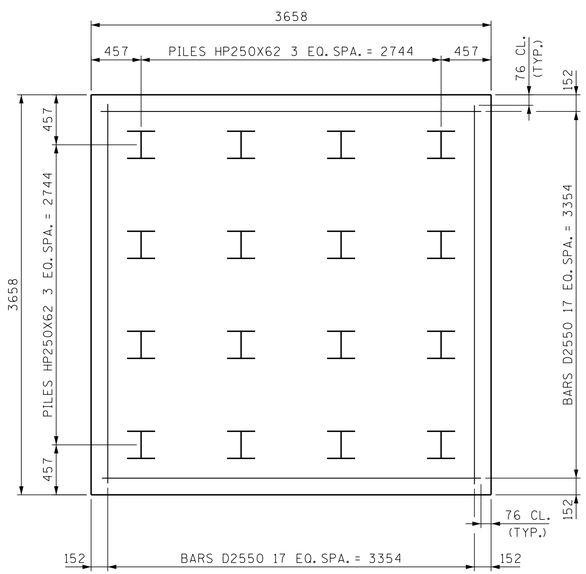


PLAN OF FOOTING

NOTE: ALL DIMENSIONS SHOWN IN MILLIMETERS, WITH THE EXCEPTION OF STATIONS AND ELEVATIONS, UNLESS OTHERWISE NOTED.

DIVISION OF STRUCTURES — METRIC

STATE OF TENNESSEE
DEPARTMENT OF TRANSPORTATION

BRIDGE NO. 2
BENT NO. 1 DETAILS
COLLECTOR NO. 5
OVER
STATE ROUTE 115
STATION 5+334.806
KNOX COUNTY
2015

CABRINA M. DIETERS — STATE OF TENNESSEE

CORRECT Wayne G. Sieger
ENGINEER OF STRUCTURES

U-73-95

DESIGNED BY ADAM PRICE DATE 12-14
DRAWN BY CHRIS STAPLER DATE 08-15
SUPERVISED BY C.M.D./BIRDWELL DATE 08-15
CHECKED BY C. DIETERS DATE 09-15

FF1137F.DGN

CONST. NO. 47026-3279-14

| PROJECT NO. | YEAR | SHEET NO. |
|---|---|---|
| NH-115(54)__ | 2015 | |

REVISIONS

| NO. | DATE | BY | BRIEF DESCRIPTION |
|---|---|---|---|
| | | | |

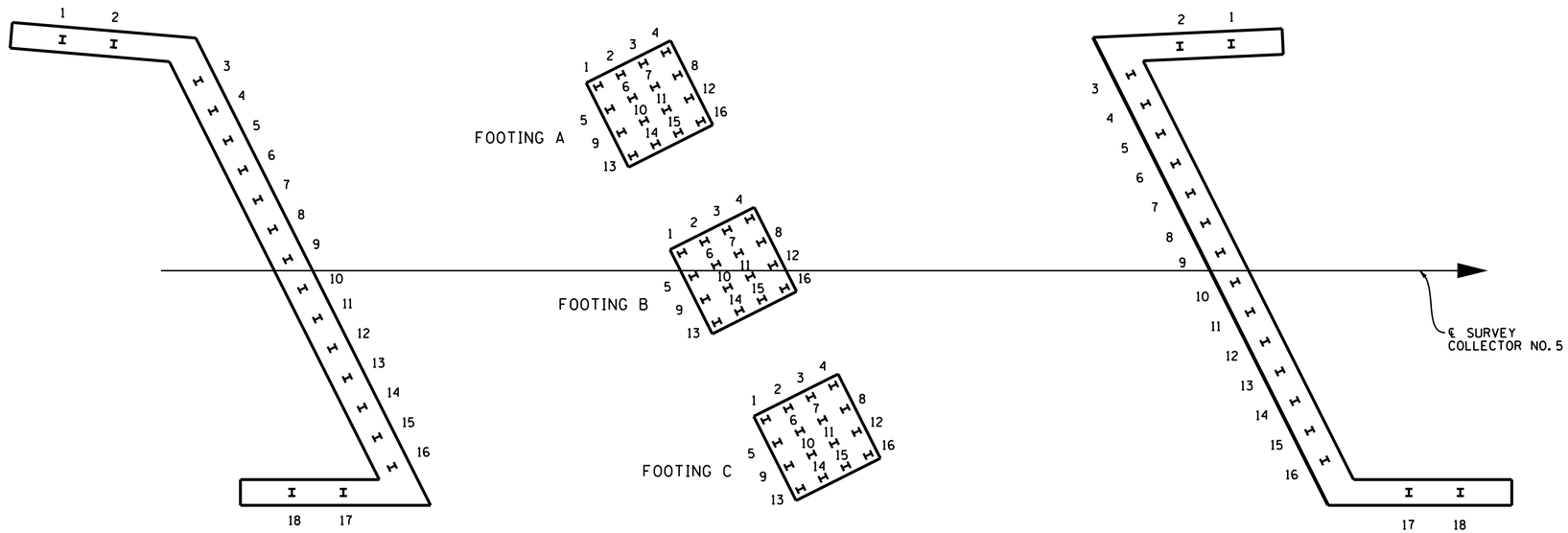


ABUTMENT NO. 1 BENT ABUTMENT NO. 2

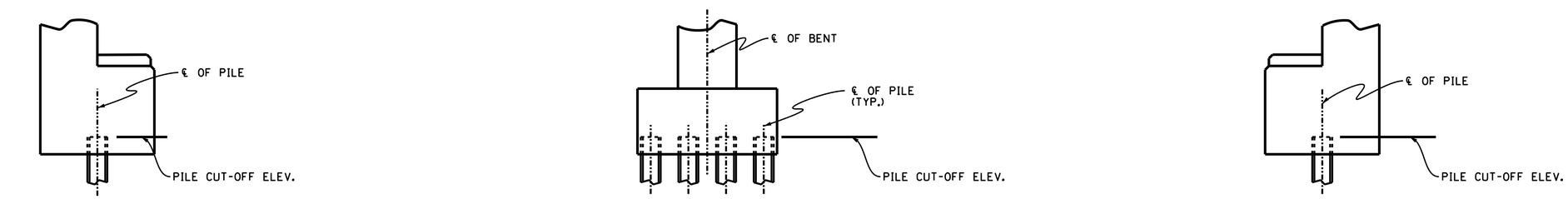


ABUTMENT NO. 1 BENT ABUTMENT NO. 2

| TOP OF FOOTING ELEVATION | BOTTOM OF FOOTING ELEVATION |
|---|---|
| FOOTING A _____ | FOOTING A _____ |
| FOOTING B _____ | FOOTING B _____ |
| FOOTING C _____ | FOOTING C _____ |

TABLE SHOWING PILE NUMBERS, PILE CUT-OFF ELEVATION & PILE LENGTHS

| | | 1 | 2 | 3 | 4 | 5 | 6 | 7 | 8 | 9 | 10 | 11 | 12 | 13 | 14 | 15 | 16 | 17 | 18 |
|---|---|---|---|---|---|---|---|---|---|---|---|---|---|---|---|---|---|---|---|
| ABUTMENT NO. 1 | PILE CUT-OFF ELEV. | | | | | | | | | | | | | | | | | | |
| | PILE TIP LENGTH | | | | | | | | | | | | | | | | | | |
| | IN PLACE PILE LENGTH | | | | | | | | | | | | | | | | | | |
| BENT FOOTING A | PILE CUT-OFF ELEV. | | | | | | | | | | | | | | | | | | |
| | PILE TIP LENGTH | | | | | | | | | | | | | | | | | | |
| | IN PLACE PILE LENGTH | | | | | | | | | | | | | | | | | | |
| BENT FOOTING B | PILE CUT-OFF ELEV. | | | | | | | | | | | | | | | | | | |
| | PILE TIP LENGTH | | | | | | | | | | | | | | | | | | |
| | IN PLACE PILE LENGTH | | | | | | | | | | | | | | | | | | |
| BENT FOOTING C | PILE CUT-OFF ELEV. | | | | | | | | | | | | | | | | | | |
| | PILE TIP LENGTH | | | | | | | | | | | | | | | | | | |
| | IN PLACE PILE LENGTH | | | | | | | | | | | | | | | | | | |
| ABUTMENT NO. 2 | PILE CUT-OFF ELEV. | | | | | | | | | | | | | | | | | | |
| | PILE TIP LENGTH | | | | | | | | | | | | | | | | | | |
| | IN PLACE PILE LENGTH | | | | | | | | | | | | | | | | | | |

NOTE: ALL DIMENSIONS SHOWN IN MILLIMETERS, WITH THE EXCEPTION OF STATIONS AND ELEVATIONS, UNLESS OTHERWISE NOTED.

STATE OF TENNESSEE
DEPARTMENT OF TRANSPORTATION

BRIDGE NO. 2
FINAL FOUNDATION DATA
COLLECTOR NO. 5
OVER
STATE ROUTE 115
STATION 5+334.806
KNOX COUNTY
2015

NOTE TO CONTRACTOR & CONSTRUCTION OFFICE:
THE BLANKS ON THIS SHEET ARE TO BE FILLED IN BY THE CONSTRUCTION OFFICE AND/OR FIELD ENGINEER GIVING AS BUILT CONDITIONS. AFTER COMPLETION, IT IS TO BE SENT TO THE DIVISION OF STRUCTURES TO BECOME PART OF THE FINAL BRIDGE DOCUMENTS.

CORRECT _____
ENGINEER OF STRUCTURES

DESIGNED BY ALI OMAR DATE 09-14
DRAWN BY RODNEY CHANDLER DATE 08-15
SUPERVISED BY CMD/BIRDWELL DATE 08-15
CHECKED BY C. DIETERS DATE 09-15

U-73-96

BOS1137F.DGN

# BILL OF STEEL

## SUPERSTRUCTURE (EPOXY-COATED)

| BAR | LOCATION | SIZE | NO. REQ'D | BENDING DIMENSIONS A | B | C | D | LENGTH |
|---|---|---|---|---|---|---|---|---|
| A1300E | SIDEWALK | 13 | 48 | | | | | 9144 |
| A1301E | SIDEWALK | 13 | 6 | | | | | 2870 |
| A1302E | SIDEWALK | 13 | 12 | | | | | 7214 |
| A1303E | SIDEWALK | 13 | 291 | | | | | 1673 |
| A1600E | SLAB | 16 | 520 | | | | | 9144 |
| A1601E | SLAB | 16 | 65 | | | | | 4264 |
| SER. | | | | | | | | |
| A1602E | SLAB | 16 | 4 | * | | | | 420150 |
| | | | | DIM "A" VARIES FROM 991 TO 15815 IN INC OF 303 (50 BARS) | | | | |
| A1603E | SLAB | 16 | 832 | | | | | 16118 |
| A2200E | SLAB | 22 | 54 | | | | | 18288 |
| A2201E | SLAB | 22 | 54 | | | | | 17501 |
| A3200E | SLAB | 32 | 106 | | | | | 18288 |
| A3201E | SLAB | 32 | 54 | | | | | 15240 |
| A3202E | SLAB | 32 | 54 | | | | | 9705 |
| B1601E | SLAB/PARAPET | 16 | 466 | 838 | | | | 1016 |
| B1601E | SLAB/PARAPET | 16 | 466 | 1067 | | | | 1246 |

## SUPERSTRUCTURE (REGULAR)

| BAR | LOCATION | SIZE | NO. REQ'D | BENDING DIMENSIONS A | B | C | D | LENGTH |
|---|---|---|---|---|---|---|---|---|
| A1604 | DIAPHRAGM | 16 | 60 | | | | | 2032 |
| CD1600 | DIAPHRAGM | 16 | 24 | 965 | 661 | 447 | | 1626 |
| F1600 | DIAPHRAGM | 16 | 48 | 661 | 916 | 661 | 842 | 2565 |
| LS1300 | DIAPHRAGM | 13 | 12 | 356 | 356 | | | 1654 |
| LS1301 | DIAPHRAGM | 13 | 35 | 356 | 1524 | | | 3988 |

## ABUTMENT NO. 1 (EPOXY-COATED)

| BAR | LOCATION | SIZE | NO. REQ'D | BENDING DIMENSIONS A | B | C | D | LENGTH |
|---|---|---|---|---|---|---|---|---|
| A1670E | WINGWALL/PARAPET | 16 | 36 | | | | | 1697 |
| A1940E | ENDWALL | 19 | 2 | | | | | 18055 |
| A1942E | ENDWALL | 19 | 120 | | | | | 1854 |
| B1670E | WINGWALL/PARAPET | 16 | 26 | 635 | | | | 813 |
| B1671E | WINGWALL/PARAPET | 16 | 26 | 859 | | | | 1037 |
| B1940E | ENDWALL | 19 | 2 | 1524 | | | | 1727 |
| F1940E | ENDWALL/ROADWAY BRACKET | 19 | 55 | 330 | 178 | 330 | 381 | 1219 |
| R1940E | ENDWALL/SLAB | 19 | 55 | 991 | 895 | | | 1886 |

## ABUTMENT NO. 1 (REGULAR)

| BAR | LOCATION | SIZE | NO. REQ'D | BENDING DIMENSIONS A | B | C | D | LENGTH |
|---|---|---|---|---|---|---|---|---|
| A1340 | ROADWAY BRACKET | 13 | 1 | | | | | 17077 |
| A1341 | WINGWALL | 13 | 8 | | | | | 5651 |
| A1342 | WINGWALL | 13 | 35 | | | | | 1845 |
| A1343 | WINGWALL | 13 | 7 | | | | | 5736 |
| A1640 | ABUTMENT BEAM | 16 | 2 | | | | | 9144 |
| A1641 | ABUTMENT BEAM | 16 | 2 | | | | | 10131 |
| A1642 | WING BEAM | 16 | 2 | | | | | 6236 |
| A1643 | WING BEAM | 16 | 2 | | | | | 6489 |
| A1941 | BEAM/ENDWALL | 19 | 12 | | | | | 18055 |
| A1943 | ENDWALL | 19 | 10 | | | | | 1067 |
| A1944 | WINGWALL | 19 | 8 | | | | | 5498 |
| A1945 | WINGWALL | 19 | 35 | | | | | 1845 |
| A1946 | WINGWALL | 19 | 7 | | | | | 5923 |
| A1947 | ENDWALL | 19 | 30 | | | | | 1611 |
| A2240 | ABUTMENT BEAM | 22 | 14 | | | | | 9144 |
| A2241 | ABUTMENT BEAM | 22 | 14 | | | | | 10614 |
| A2242 | WING BEAM | 22 | 10 | | | | | 6236 |
| A2243 | WING BEAM | 22 | 10 | | | | | 6489 |
| B1941 | ENDWALL | 19 | 12 | 1524 | | | | 1727 |
| HA1940 | ENDWALL | 19 | 36 | 397 | 971 | 885 | | 2253 |
| H1640 | ENDWALL/ROADWAY BRACKET | 16 | 55 | 660 | 152 | | | 964 |
| H1940 | ENDWALL/ABUTMENT BEAM | 19 | 55 | 357 | 1172 | | | 2701 |
| H1941 | WINGWALL/WING BEAM | 19 | 35 | 357 | 1204 | | | 2765 |
| LS1640 | ABUTMENT BEAM | 16 | 47 | 1124 | 819 | | | 4165 |
| LS1641 | WING BEAM | 16 | 31 | 819 | 819 | | | 3555 |

## ABUTMENT NO. 2 (EPOXY-COATED)

| BAR | LOCATION | SIZE | NO. REQ'D | BENDING DIMENSIONS A | B | C | D | LENGTH |
|---|---|---|---|---|---|---|---|---|
| A1670E | WINGWALL/PARAPET | 16 | 36 | | | | | 1697 |
| A1940E | ENDWALL | 19 | 2 | | | | | 18055 |
| A1942E | ENDWALL | 19 | 120 | | | | | 1843 |
| B1670E | WINGWALL/PARAPET | 16 | 26 | 635 | | | | 813 |
| B1671E | WINGWALL/PARAPET | 16 | 26 | 859 | | | | 1037 |
| B1940E | ENDWALL | 19 | 2 | 1524 | 203 | | | 1727 |
| F1940E | ENDWALL/ROADWAY BRACKET | 19 | 56 | 330 | 178 | 330 | 381 | 1219 |
| R1940E | ENDWALL/SLAB | 19 | 56 | 991 | 895 | | | 1886 |

CONST. NO. 47026-3279-14

| PROJECT NO. | YEAR | SHEET NO. |
|---|---|---|
| NH-115(54) | 2015 | |

REVISIONS

| NO. | DATE | BY | BRIEF DESCRIPTION |
|---|---|---|---|
| | | | |

NOTE: BAR NUMBERS ARE REPEATED ON BILL OF STEEL FOR EACH SUBSTRUCTURE. THE SUPPLIER SHALL SHIP THE BARS TO THE JOB SITE WITH THE SUBSTRUCTURE DESIGNATION INCLUDED AS PART OF THE LABEL.

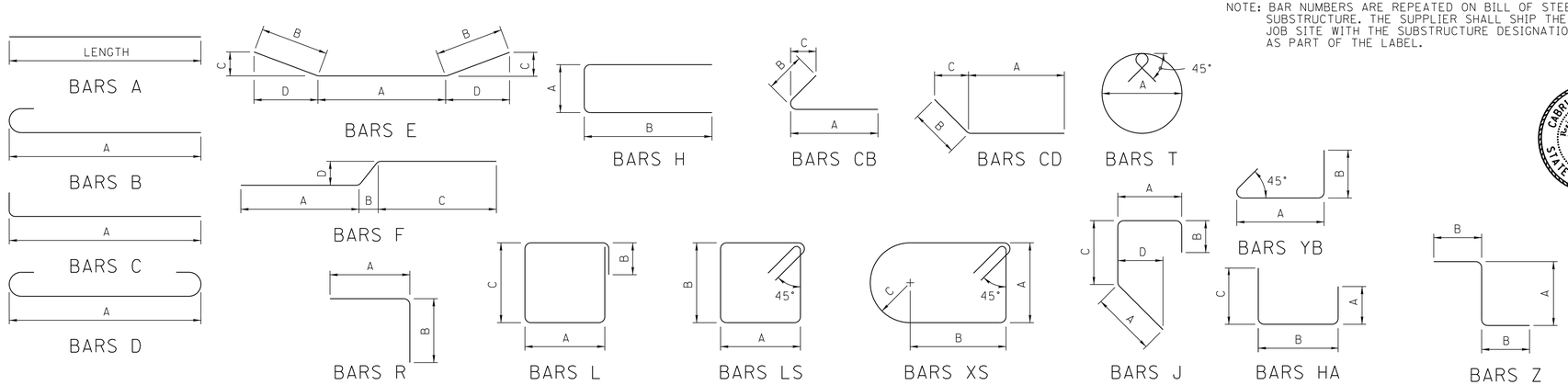


## REINFORCING STEEL CODE

| TYPE | SIZE | SERIES |
|---|---|---|
| A | 16 | 06 |

NOTE: DIMENSIONS SHOWN ON THIS SHEET ARE OUTSIDE TO OUTSIDE OF BAR. STANDARD C.R.S.I. HOOK DETAILS SHALL APPLY, EXCEPT AS NOTED.

NOTE: THE SUFFIX E FOR BARS SO MARKED DENOTES EPOXY COATED REINFORCEMENT.

NOTE: ALL DIMENSIONS SHOWN IN MILLIMETERS, WITH THE EXCEPTION OF STATIONS AND ELEVATIONS, UNLESS OTHERWISE NOTED.

STATE OF TENNESSEE
DEPARTMENT OF TRANSPORTATION
BRIDGE NO. 2
BILL OF STEEL
COLLECTOR NO. 5
OVER
STATE ROUTE 115
STATION 5+334.806
KNOX COUNTY
2015

| | | | |
|---|---|---|---|
| DESIGNED BY | ALI OMAR | DATE | 8-15 |
| DRAWN BY | JERRY W. SIMPSON | DATE | 9-15 |
| SUPERVISED BY | BIRDWELL/DIETERS | DATE | 9-15 |
| CHECKED BY | C. DIETERS | DATE | 9-15 |

CORRECT Wayne J. Sieger
ENGINEER OF STRUCTURES

U-73-97

BOS1137F.DGN

# BILL OF STEEL

## ABUTMENT NO. 2 (REGULAR)

| BAR | LOCATION | SIZE | NO. REQ'D | BENDING DIMENSIONS A | B | C | D | LENGTH |
|---|---|---|---|---|---|---|---|---|
| A1340 | ROADWAY BRACKET | 13 | 1 | | | | | 17076 |
| A1341 | WINGWALL | 13 | 7 | | | | | 5655 |
| A1342 | WINGWALL | 13 | 35 | | | | | 1802 |
| A1343 | WINGWALL | 13 | 7 | | | | | 5727 |
| A1640 | ABUTMENT BEAM | 16 | 2 | | | | | 9144 |
| A1641 | ABUTMENT BEAM | 16 | 2 | | | | | 10093 |
| A1642 | WING BEAM | 16 | 2 | | | | | 6251 |
| A1643 | WING BEAM | 16 | 2 | | | | | 6478 |
| A1941 | BEAM/ENDWALL | 19 | 14 | | | | | 18055 |
| A1943 | ENDWALL | 19 | 8 | | | | | 1067 |
| A1944 | WINGWALL | 19 | 7 | | | | | 5519 |
| A1945 | WINGWALL | 19 | 35 | | | | | 1802 |
| A1946 | WINGWALL | 19 | 7 | | | | | 5880 |
| A1947 | ENDWALL | 19 | 30 | | | | | 1611 |
| A2240 | ABUTMENT BEAM | 22 | 14 | | | | | 9144 |
| A2241 | ABUTMENT BEAM | 22 | 14 | | | | | 10576 |
| A2242 | WING BEAM | 22 | 10 | | | | | 6251 |
| A2243 | WING BEAM | 22 | 10 | | | | | 6478 |
| B1941 | ENDWALL | 19 | 14 | 1524 | | | | 1727 |
| HA1940 | ENDWALL | 19 | 42 | 397 | 971 | 885 | | 2253 |
| H1340 | RISER BLOCK | 13 | 8 | 692 | 412 | | | 1516 |
| H1341 | RISER BLOCK | 13 | 6 | 585 | 412 | | | 1409 |
| H1640 | ENDWALL/ROADWAY BRACKET | 16 | 56 | 660 | 152 | | | 964 |
| H1940 | ENDWALL/ABUTMENT BEAM | 19 | 56 | 357 | 1234 | | | 2825 |
| H1941 | WINGWALL/WINGBEAM | 19 | 35 | 357 | 1114 | | | 2585 |
| LS1640 | ABUTMENT BEAM | 16 | 47 | 1124 | 819 | | | 4165 |
| LS1641 | WING BEAM | 16 | 31 | 819 | 819 | | | 3555 |

## BENT NO. 1

| BAR | LOCATION | SIZE | NO. REQ'D | BENDING DIMENSIONS A | B | C | D | LENGTH |
|---|---|---|---|---|---|---|---|---|
| A1950 | CAP BEAM | 19 | 10 | | | | | 16967 |
| A1951 | CAP BEAM | 19 | 2 | | | | | 15612 |
| A1952 | CAP BEAM | 19 | 2 | | | | | 14132 |
| A2950 | CAP BEAM/ COLUMN | 29 | 96 | | | | | 6090 |
| C2950 | FOOTING / COLUMN | 29 | 96 | 2729 | | | | 3204 |
| D2550 | FOOTING | 25 | 216 | 3506 | | | | 4056 |
| D3650 | CAP BEAM | 36 | 8 | 16967 | | | | 17917 |
| E3650 | CAP BEAM | 36 | 8 | 12700 | 2215 | 594 | 2134 | 17130 |
| H1350 | RISER BLOCK | 13 | 15 | 1145 | 485 | | | 2115 |
| H1351 | RISER BLOCK | 13 | 15 | 1052 | 485 | | | 2022 |
| H1950 | CAP BEAM | 19 | 15 | 1194 | 1727 | | | 4648 |
| LS1650 | CAP BEAM/COLUMN/FOOTING | 16 | 330 | 1042 | 1067 | | | 4498 |
| LS1950 | CAP BEAM | 19 | 84 | 889 | 1727 | | | 5642 |
| SER. LS1951 | CAP BEAM | 19 | 4 | 889 | * | | | 55352 |
| | | | | DIM. "B" VARIES FROM 1138 TO 1706 IN INC. OF 57 (11 BARS) | | | | |
| YB1650 | CAP BEAM/COLUMN/FOOTING | 16 | 660 | 509 | 155 | | | 804 |

| BAR | LOCATION | SIZE | NO. REQ'D | BENDING DIMENSIONS A | B | C | D | LENGTH |
|---|---|---|---|---|---|---|---|---|

| BAR | LOCATION | SIZE | NO. REQ'D | BENDING DIMENSIONS A | B | C | D | LENGTH |
|---|---|---|---|---|---|---|---|---|

CONST. NO. 47026-3279-14

| PROJECT NO. | YEAR | SHEET NO. |
|---|---|---|
| NH-115(54) | 2015 | |

REVISIONS

| NO. | DATE | BY | BRIEF DESCRIPTION |
|---|---|---|---|

NOTE: BAR NUMBERS ARE REPEATED ON BILL OF STEEL FOR EACH SUBSTRUCTURE. THE SUPPLIER SHALL SHIP THE BARS TO THE JOB SITE WITH THE SUBSTRUCTURE DESIGNATION INCLUDED AS PART OF THE LABEL.

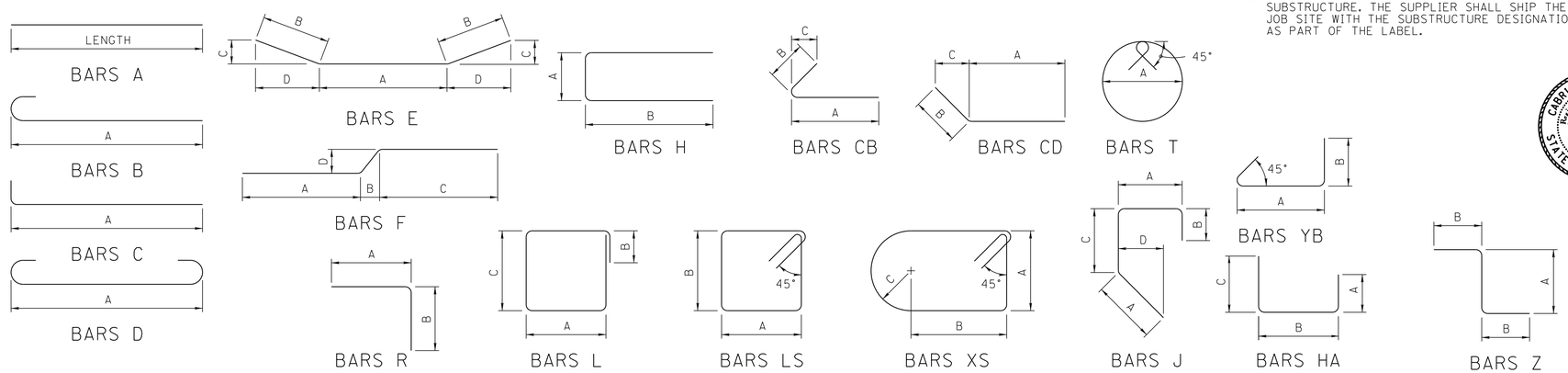


## REINFORCING STEEL CODE

| TYPE | SIZE | SERIES |
|---|---|---|
| A | 16 | 06 |

NOTE: DIMENSIONS SHOWN ON THIS SHEET ARE OUTSIDE TO OUTSIDE OF BAR. STANDARD C.R.S.I. HOOK DETAILS SHALL APPLY, EXCEPT AS NOTED.

NOTE: THE SUFFIX E FOR BARS SO MARKED DENOTES EPOXY COATED REINFORCEMENT.

CABRINA M. DIETERS — STATE OF TENNESSEE

DIVISION OF METRIC STRUCTURES

NOTE: ALL DIMENSIONS SHOWN IN MILLIMETERS, WITH THE EXCEPTION OF STATIONS AND ELEVATIONS, UNLESS OTHERWISE NOTED.

STATE OF TENNESSEE
DEPARTMENT OF TRANSPORTATION

BRIDGE NO. 2
BILL OF STEEL
COLLECTOR NO. 5
OVER
STATE ROUTE 115
STATION 5+334.806
KNOX COUNTY
2015

DESIGNED BY ALI OMAR DATE 8-15
DRAWN BY JERRY W. SIMPSON DATE 9-15
SUPERVISED BY BIRDWELL/DIETERS DATE 9-15
CHECKED BY C. DIETERS DATE 9-15

CORRECT Wayne G. Sieger
ENGINEER OF STRUCTURES

U-73-98

LAY1138F.DGN

SR115-3
PI 12+178.090
N 178,089.9850
E 784,461.6602
Δs 32° 47′ 57″ (RT)
Δc 16° 56′ 50″ (RT)
R 600.000
Lc 177.472
Ls 166.000
θs 7° 55′ 33″
LT 110.778
ST 55.434
Xc 165.683
Yc 7.644
k 82.947
p 1.912
Ts 260.095
Es 6.622
S.E. 7.7% RT
TRANS LENGTH 166.000
DESIGN SPEED 110 km/h

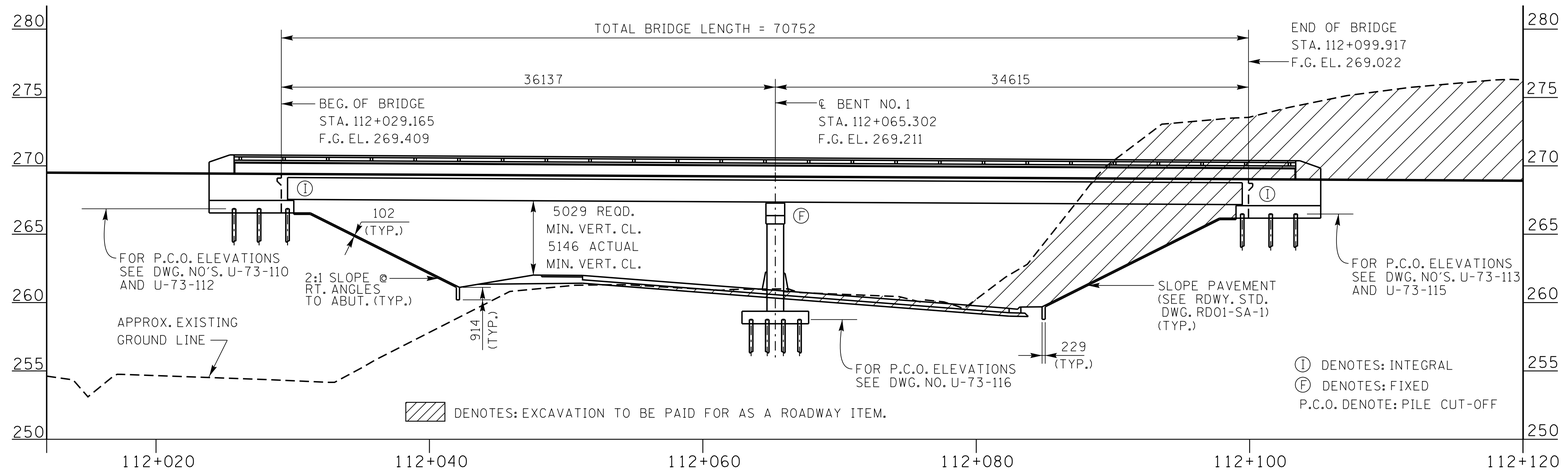


ELEVATION
(AT RT. ∠S TO ℄ SURVEY COLLECTOR NO. 3)
(SCALE: 1:12.5)

CONST. NO. 47026-3279-14

| PROJECT NO. | YEAR | SHEET NO. |
|---|---|---|
| NH-115(54) | 2015 | |

REVISIONS

| NO. | DATE | BY | BRIEF DESCRIPTION |
|---|---|---|---|
| | | | |

STATIONS FOR BRIDGE DECK DRAINS

| LEFT SIDE OF SURVEY | RIGHT SIDE OF SURVEY |
|---|---|
| 112+045.000 | 112+031.000 |
| 112+088.000 | 112+033.000 |
| 112+091.000 | 112+035.000 |
| 112+094.000 | 112+037.000 |
| 112+095.500 | 112+039.000 |
| 112+097.000 | 112+041.000 |
| 112+098.500 | 112+043.000 |
| | 112+045.000 |
| | 112+088.000 |
| | 112+089.500 |
| | 112-091.000 |
| | 112+092.500 |
| | 112+094.000 |
| | 112+095.500 |
| | 112+097.000 |

▮ DENOTES: BRIDGE DECK GRATE DRAINS
TYPE 1 RIGHT SIDE, TYPE 2 LEFT SIDE
SEE STD. DWG. NO. STD-1-2SS
SEE SHEET 2 FOR LOCATIONS

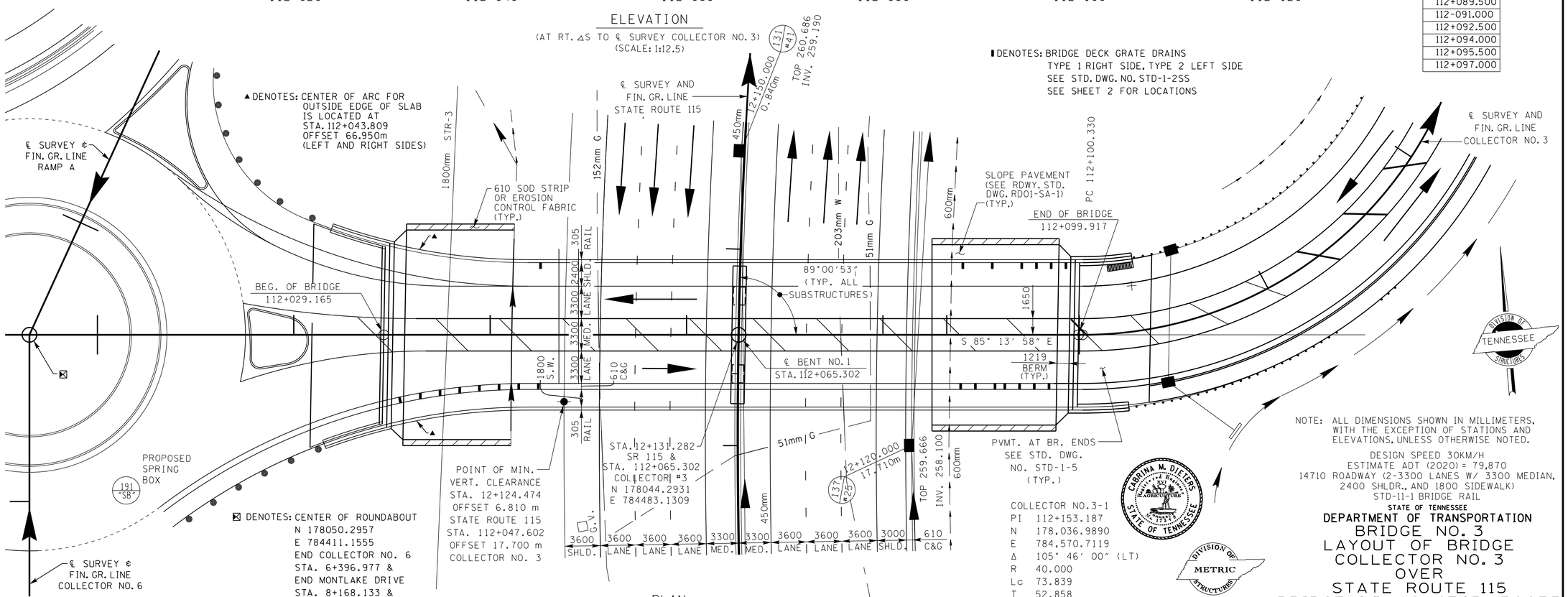


PLAN
(SCALE: 1:12.5)

▮▮▮▮ DENOTES: 2′-0″ X 8′-7″ END OF BRIDGE DRAIN
SEE STD. DWG. NOS. STD-1-6, STD-1-7, AND STD-1-8.

COLLECTOR NO. 3-1
PI 112+153.187
N 178,036.9890
E 784,570.7119
Δ 105° 46′ 00″ (LT)
R 40.000
Lc 73.839
T 52.858
E 26.287
S.E. 3.9%
TRANS. LENGTH 28
DESIGN SPEED 30km/h

NOTE: ALL DIMENSIONS SHOWN IN MILLIMETERS, WITH THE EXCEPTION OF STATIONS AND ELEVATIONS, UNLESS OTHERWISE NOTED.

DESIGN SPEED 30KM/H
ESTIMATE ADT (2020) = 79,870
14710 ROADWAY (2-3300 LANES W/ 3300 MEDIAN, 2400 SHLDR., AND 1800 SIDEWALK)
STD-11-1 BRIDGE RAIL

STATE OF TENNESSEE
**DEPARTMENT OF TRANSPORTATION**
BRIDGE NO. 3
LAYOUT OF BRIDGE
COLLECTOR NO. 3
OVER
STATE ROUTE 115
BRIDGE I.D. NO. 47SR1150035
STATION 112+065.302
KNOX COUNTY
2015

U-73-99

| | | | |
|---|---|---|---|
| DESIGNED BY | ABDISALAN DAHIR | DATE | 7-15 |
| DRAWN BY | KEVIN MARTINKO | DATE | 8-15 |
| SUPERVISED BY | BIRDWELL\DIETERS | DATE | 8-15 |
| CHECKED BY | ABDISALAN DAHIR | DATE | 8-15 |

CORRECT ENGINEER OF STRUCTURES

CONST. NO. 47026-3279-14

| PROJECT NO. | YEAR | SHEET NO. |
|---|---|---|
| NH-115(54) | 2015 | |

REVISIONS

| NO. | DATE | BY | BRIEF DESCRIPTION |
|---|---|---|---|
| | | | |

## LIST OF DRAWINGS


| | DWG. NO. | LAST REV. DATE |
|---|---|---|
| LAYOUT OF BRIDGE | U-73-99 | ----- |
| LAYOUT OF BRIDGE | U-73-100 | ----- |
| GENERAL NOTES AND ESTIMATED QUANTITIES | U-73-101 | ----- |
| FOUNDATION DATA | U-73-102 | ----- |
| FOUNDATION DATA | U-73-103 | ----- |
| SUPERSTRUCTURE | U-73-104 | ----- |
| SUPERSTRUCTURE DETAILS | U-73-105 | ----- |
| SUPERSTRUCTURE DETAILS | U-73-106 | ----- |
| SUPERSTRUCTURE DETAILS | U-73-107 | ----- |
| PRESTRESSED BULB-TEE BEAM DETAILS SPAN NO. 1 | U-73-108 | ----- |
| PRESTRESSED BULB-TEE BEAM DETAILS SPAN NO. 2 | U-73-109 | ----- |
| ABUTMENT NO. 1 | U-73-110 | ----- |
| ABUTMENT NO. 1 DETAILS | U-73-111 | ----- |
| ABUTMENT NO. 1 DETAILS | U-73-112 | ----- |
| ABUTMENT NO. 2 | U-73-113 | ----- |
| ABUTMENT NO. 2 DETAILS | U-73-114 | ----- |
| ABUTMENT NO. 2 DETAILS | U-73-115 | ----- |
| BENT NO. 1 | U-73-116 | ----- |
| BENT NO. 1 DETAILS | U-73-117 | ----- |
| DECORATIVE SURFACE FINISH AT ABUTMENTS | U-73-118 | ----- |
| FINAL FOUNDATION DATA | U-73-119 | ----- |
| BILL OF STEEL | U-73-120 | ----- |


## LIST OF STANDARD DRAWINGS


| | DWG. NO. | LAST REV. DATE |
|---|---|---|
| SLIDER PLATES AND DECK DRAINS | STD-1-2 | 03-28-08 |
| REINFORCED CONCRETE PAVEMENT AT BRIDGE ENDS | STD-1-5 | 03-26-14 |
| BRIDGE END DRAIN WITH PAVEMENT AT BRIDGE END | STD-1-6 | 04-28-97 |
| BRIDGE END DRAIN WITH PAVEMENT AT BRIDGE END | STD-1-7 | 08-24-11 |
| BRIDGE END DRAIN 2' X 8'-7" WITH PAVEMENT AT BRIDGE END | STD-1-8 | 05-1-95 |
| STANDARD PILE DETAILS | STD-5-1 | 10-25-93 |
| STANDARD PILE DETAILS | STD-5-2 | 05-01-14 |
| STANDARD SEISMIC DETAILS | STD-6-1 | 11-01-10 |
| STANDARD SEISMIC DETAILS | STD-6-2 | 11-07-94 |
| REINF. BAR SUPPORT DETAILS FOR CONC. SLABS | STD-9-1 | 10-07-08 |
| MISCELLANEOUS ABUTMENT & DRAINAGE DETAILS | STD-10-1 | 04-08-05 |
| BRIDGE RAILING WITH STRUCTURAL TUBING | STD-11-1 | 05-01-14 |
| STD. DETAILS AND INT. DIAPH. DETAILS FOR BULB-TEE BEAMS | STD-14-1 | 05-01-14 |
| SAFETY APPROACH TO UNDERPASSES GRADING DESIGN AND SLOPE PROTECTION | RD01-SA-1 | 10-15-02 |


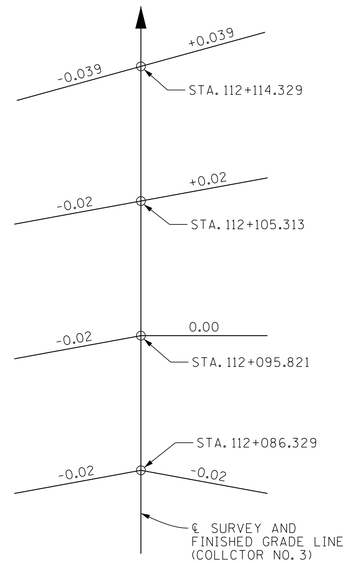


TRANSITION SKETCH

COLLECTOR NO. 3

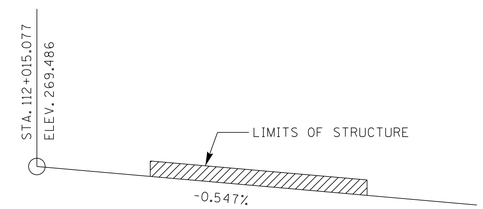


GRADE SKETCH

COLLECTOR NO. 3

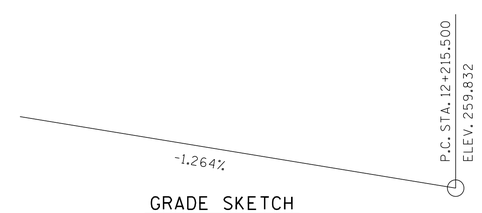


GRADE SKETCH

STATE ROUTE 115

## REINFORCED CONCRETE SLOPE PAVEMENT

PAVE SLOPES AND EXPOSED EARTH UNDER BRIDGES WITH 102 THICK CEMENT CONCRETE SLAB REINFORCED WITH NO. 4 GAGE (21.2mm²) WIRE FABRIC @ 152 CENTERS AND 2.83 KG. PER S.M. THE WIRE FABRIC REINFORCEMENT SHALL BE PLACED AT ONE-HALF THE DEPTH OF THE SLAB AND EXTEND TO WITHIN 75 OF ITS EDGE WITH A 305 LAP REQ'D. ON ALL SHEETS. THE COST OF THE WIRE FABRIC REINFORCEMENT TO BE INCLUDED IN THE UNIT PRICE BID FOR ITEM 709M04, REINFORCED CONCRETE SLOPE PAVEMENT. 12.7mm PREMOULDED EXPANSION JOINTS WITHOUT LOAD TRANSFERS SHALL BE FORMED ABOUT ALL STRUCTURES AND FEATURES PROJECTING THROUGH, IN OR AGAINST THE SLAB. THE SLAB SHALL BE GROOVED PARALLEL WITH AND AT RIGHT ANGLES TO THE UNDER ROADWAY CENTER LINE AT 1830 CENTERS. DEPTH OF GROOVE TO BE NOT LESS THAN 25 SEE STD. DWG. RD01-SA-1 FOR LIMITS OF SLOPE PROTECTION.

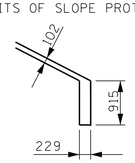


DESIGN SPEED 30KM/H
ESTIMATE ADT (2020) = 79,870
14710 ROADWAY (2-3300 LANES W/ 3300 MEDIAN, 2400 SHLDR., AND 1800 SIDEWALK)
STD-11-1 BRIDGE RAIL

NOTE: ALL DIMENSIONS SHOWN IN MILLIMETERS, WITH THE EXCEPTION OF STATIONS AND ELEVATIONS, UNLESS OTHERWISE NOTED.

STATE OF TENNESSEE
DEPARTMENT OF TRANSPORTATION
BRIDGE NO. 3
LAYOUT OF BRIDGE
COLLECTOR NO. 3
OVER
STATE ROUTE 115
BRIDGE I.D. NO. 47SR1150035
STATION 112+065.302
KNOX COUNTY
2015

U-73-100

| | | | |
|---|---|---|---|
| DESIGNED BY | ABDISALAN DAHIR | DATE | 7-15 |
| DRAWN BY | KEVIN MARTINKO | DATE | 8-15 |
| SUPERVISED BY | BIRDWELL\DIETERS | DATE | 8-15 |
| CHECKED BY | ABDISALAN DAHIR | DATE | 8-15 |

CORRECT Wayne G. Seger
ENGINEER OF STRUCTURES

GN1138.DGN

## GENERAL NOTES

SPECIFICATIONS: STANDARD ROAD AND BRIDGE SPECIFICATIONS OF THE TENNESSEE DEPARTMENT OF TRANSPORTATION (JANUARY 1, 2015 EDITION).

DESIGN SPECIFICATIONS: AASHTO LRFD SEVENTH EDITION, 2014, AND THE 2011 AASHTO GUIDE SPECIFICATIONS FOR LRFD SEISMIC BRIDGE DESIGN, EDITION 2 (WITH INTERIMS).

LOADING: HL-93 LIVE LOADING; SEISMIC CATEGORY ZONE 1 WITH As=0.190 $S_{DS}$=0.340, $S_{D1}$=0.119 (1000 YEAR RETURN). DEAD LOAD INCLUDES 170.9 KG/M2 FOR FUTURE WEARING SURFACE.

CONCRETE: CLASS 'A' f'c= 21 KPA, CLASS 'D' f'c= 28 KPA FOR BRIDGE DECK.

CLASS "D" CONCRETE FOR BRIDGE DECKS SHALL BE IN ACCORDANCE WITH SECTION 604 OF THE STANDARD SPECIFICATIONS.

BRIDGE DECK SURFACE FINISH: TO BE IN ACCORDANCE WITH METHOD 3 IN ARTICLE 604.22 OF THE STANDARD SPECIFICATIONS.

BRIDGE DECK FORMS: BRIDGE DECK FORMS FOR CONCRETE DECKS SHALL BE CONSTRUCTED USING EITHER REMOVABLE FORMS OR PERMANENT FORMS. PERMANENT FORMS MAY BE REMAIN-IN-PLACE STEEL. FORMS SHALL BE ATTACHED BY MEANS OTHER THAN WELDING TO MAIN STRUCTURAL MEMBERS OR REINFORCING STEEL. TEMPORARY ERECTION DIAPHRAGMS MUST BE USED AT THE ENDS OF PRECAST CONCRETE GIRDERS WHERE SUPPORT DIAPHRAGMS OR ABUTMENT BACKWALLS ARE TO BE POURED CONCURRENTLY WITH THE DECK AND SHALL BE PROVIDED ELSEWHERE IN ACCORDANCE WITH THE SPECIFICATIONS TO PREVENT GIRDER ROTATION. SEE STANDARD DRAWINGS STD-4-1 THRU 4, STD-14-1 AND ARTICLE 604.05 OF THE STANDARD SPECIFICATIONS.

SLAB OVERHANGS SUPPORTED BY BULB-TEE BEAMS: IT IS RECOMMENDED THAT SPACING OF OVERHANG BRACKETS FOR BULB-TEE BEAMS NOT EXCEED 610 mm CENTER TO CENTER.

REINFORCING STEEL: SHALL BE ASTM A615M GRADE 400, UNLESS NOTED OTHERWISE. SEE SECTION 604 AND 907 OF THE STANDARD SPECIFICATIONS.

BRIDGE RAIL SYSTEM: BUILD BRIDGE RAILINGS ACCORDING TO STANDARD DRAWING STD-11-1. THE RAILING SHALL BE FORMED AND CAST PLUMB, NOT PERPENDICULAR TO THE SLAB. THE DIMENSIONS AT THE TRAFFIC FACE SHALL BE KEPT CONSTANT, WITH VARIATION DUE TO CROSS SLOPE ACCOMMODATED AT THE REAR FACE.

PILES: TO BE HP 250 X 62, DRIVEN TO A MINIMUM BEARING OF 490 kN OR REFUSAL ON ROCK FOR THE ABUTMENTS AND BENT.

NOTE: THE CONTRACTOR SHALL PROVIDE 100% CONVENTIONAL FALL PROTECTION FOR WORKERS INSTALLING DECKING ABOVE 4.572 METERS.

SHOP DRAWINGS: SEE SECTION 105.02 OF THE STANDARD SPECIFICATIONS.

VALUE ENGINEERING ALTERNATE BRIDGE DESIGN CRITERIA: ALTERNATE BRIDGE DESIGN PROPOSALS MAY NOT DIMINISH THE FUNCTIONAL OR STRUCTURAL EQUIVALENCY OF THE BRIDGE AND MUST MEET OR EXCEED BOTH THE SERVICE LEVEL AND ULTIMATE CAPACITIES OF THE CONTRACT PLANS STRUCTURE. ADDITIONALLY, THE WATERWAY OPENING AND FLOOD CLEARANCES MAY NOT BE REDUCED; FOR GRADE SEPARATIONS, THE HORIZONTAL CLEARANCES MAY NOT BE REDUCED, NOR MAY THE VERTICAL CLEARANCES BE LESS THAN THE MINIMUM ACCEPTABLE FOR THE TYPE FACILITY CROSSED.

FINISHING CONCRETE SURFACES: CONCRETE FINISHING SHALL BE IN ACCORDANCE WITH SECTION 604.21 OF THE TENNESSEE STANDARD SPECIFICATION. A CLASS I FINISH FOLLOWED BY AN APPLIED TEXTURE FINISH SHALL BE USED IN LIEU OF A CLASS II FINISH. NO TEXTURE FINISH SHALL BE APPLIED PRIOR TO COMPLETION OF PAVING AND HAULING OPERATIONS AT THE BRIDGE SITE. THE APPLIED TEXTURE FINISH SHALL BE MEASURED AND PAID FOR UNDER ITEM 604M04.01.

SPECIAL NOTE: FOUNDATIONS FOR BENTS SHALL BE EXCAVATED TO THE BOTTOM OF FOOTING ELEVATIONS SHOWN; ROD SOUNDINGS SHALL THEN BE MADE AS DIRECTED BY THE ENGINEER. FROM THE RESULTS OBTAINED THE ENGINEER WILL DECIDE IF PILES WILL BE USED OR THE FOOTINGS CARRIED TO ROCK. COST OF ROD SOUNDING TO BE INCLUDED IN THE UNIT PRICE BID FOR OTHER ITEMS. NO REINFORCING STEEL FOR BENT COLUMNS OR FOOTINGS SHALL BE ORDERED UNTIL FINAL ELEVATIONS HAVE BEEN DETERMINED.

NOTE: PILES SHALL BE EQUIPPED WITH CAST STEEL POINTS. ALSO, SEE STANDARD DRAWING STD-5-1 FOR ADDITIONAL NOTES.

NOTE: THE FILLS AT THE ENDS OF THE BRIDGE SHALL BE IN PLACE AND THOROUGHLY COMPACTED BEFORE ANY ABUTMENT PILES ARE DRIVEN.

CONST. NO. 47026-3279-14

| PROJECT NO. | YEAR | SHEET NO. |
|---|---|---|
| NH-115(54) | 2015 | |

REVISIONS

| NO. | DATE | BY | BRIEF DESCRIPTION |
|---|---|---|---|
| | | | |

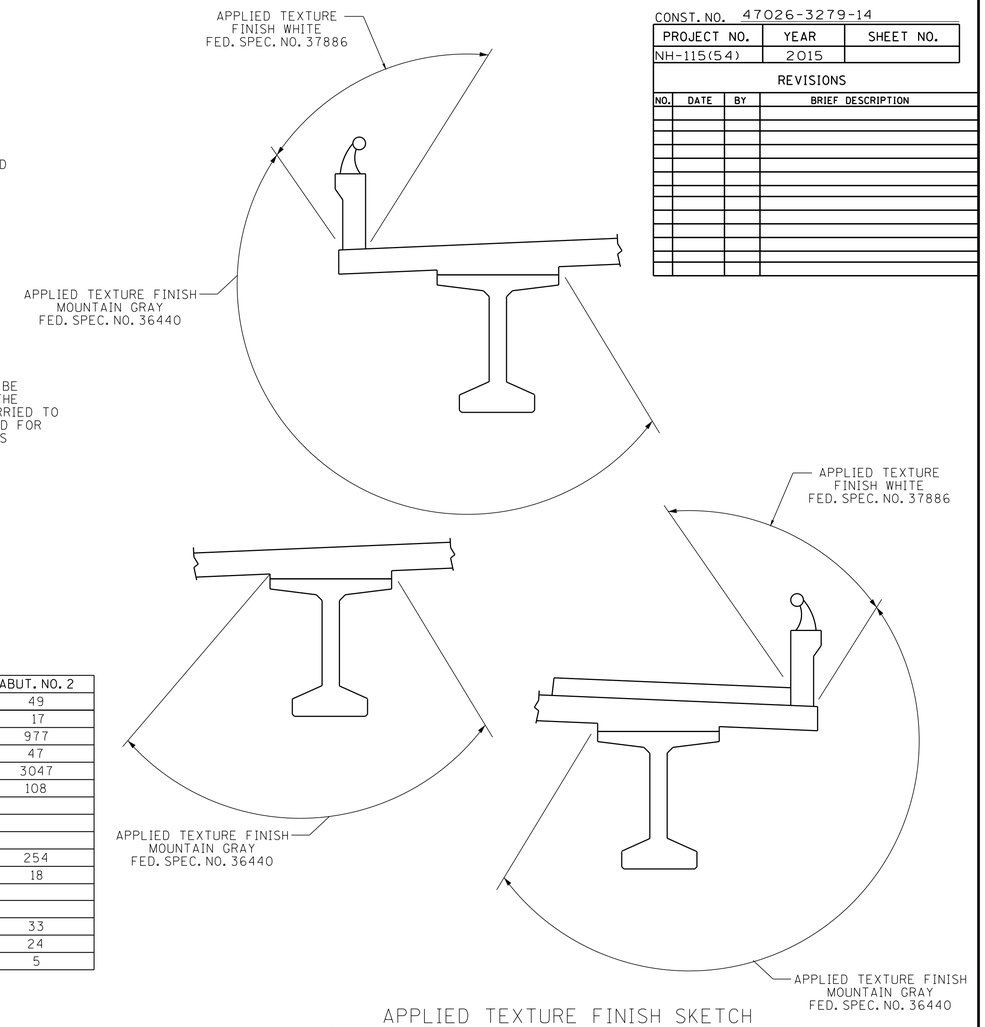


## APPLIED TEXTURE FINISH SKETCH

NOTE: IN ADDITION TO THE SURFACES SHOWN IN THE APPLIED TEXTURE FINISH SKETCH ALL EXPOSED SURFACES OF THE WINGWALLS, ABUTMENT BEAMS, BENT AND EXTERIOR PORTIONS OF ENDWALLS ARE TO RECEIVE AN APPLIED TEXTURE FINISH (MOUNTAIN GREY, FED. SPEC. NO. 36440).

## ESTIMATED QUANTITIES

| | ITEM NO. | DESCRIPTION | UNIT | TOTAL | SUPERSTRUCTURE | ABUT. NO. 1 | BENT NO. 1 | ABUT. NO. 2 |
|---|---|---|---|---|---|---|---|---|
| 1 | 204M02.01 | DRY EXCAVATION (BRIDGES) | M3 | 179 | | 54 | 76 | 49 |
| 6 | 303M01.02 | GRANULAR BACKFILL (BRIDGES) | TONNE | 37 | | 20 | | 17 |
| | 604M02.03 | EPOXY COATED REINFORCING STEEL | KG | 66550 | 64412 | 1161 | | 977 |
| 7 | 604M03.01 | CLASS A CONCRETE (BRIDGES) | M3 | 199 | | 54 | 98 | 47 |
| | 604M03.02 | STEEL BAR REINFORCEMENT (BRIDGES) | KG | 18835 | 371 | 3565 | 11852 | 3047 |
| 8 | 604M03.04 | PAVEMENT @ BRIDGE ENDS | M2 | 256 | | 148 | | 108 |
| | 604M03.09 | CLASS D CONCRETE (BRIDGE DECK) | M3 | 291 | 291 | | | |
| | 604M04.01 | APPLIED TEXTURE FINISH (NEW STRUCTURES) | M2 | 2793 | | | | |
| | 604M05.31 | BRIDGE DECK GROOVING (MECHANICAL) | M2 | 1109 | 1109 | | | |
| | 606M02.03 | STEEL PILES (250 mm) | M | 783 | | 265 | 264 | 254 |
| 10 | 606M02.06 | PILE TIPS (STEEL PILES, 250mm) | EACH | 76 | | 18 | 40 | 18 |
| 2 4 | 615M01.11 | PRESTRESSED CONCRETE BULB TEE BEAM (6" WEB)(BT-63) | M | 416 | | | | |
| 9 | 620M05 | CONCRETE PARAPET WITH STRUCTURAL TUBING | M | 163 | | | | |
| | 709M04 | REINFORCED CONCRETE SLOPE PAVEMENT | M3 | 77 | | 34 | | 33 |
| 5 | 710M09.01 | 150 PERFORATED PIPE WITH VERTICAL DRAIN SYSTEM | M | 51 | | 27 | | 24 |
| | 710M09.02 | 150 PIPE UNDERDRAIN | M | 10 | | 5 | | 5 |

1 EXCAVATION BASED ON FINAL PROFILE AT ABUTMENTS AND EXISTING GROUND AT THE BENT.

2 NOTE: COST OF ELASTOMERIC PADS AND RUBBER BONDING CEMENT TO BE INCLUDED IN THE UNIT PRICE BID FOR THE PRESTRESSED BEAM.

3 NOTE: THE COST OF BITUMINOUS-FIBERBOARD, AND ALL MISCELLANEOUS JOINT MATERIAL TO BE INCLUDED IN THE UNIT PRICE BID FOR OTHER ITEMS.

4 NOTE: INTERMEDIATE DIAPHRAGMS SHALL BE PAID FOR IN ACCORDANCE WITH STANDARD DRAWING STD-14-1.

5 NOTE: COST OF POLYETHYLENE SHEETING AND ALL MISCELLANEOUS ITEMS NECESSARY FOR INSTALLATION TO BE INCLUDED IN THE UNIT PRICE BID FOR PERFORATED PIPE.

6 NOTE: GRANULAR BACKFILL SHALL BE CLASS "A" GRADING "D" MATERIAL. SEE STANDARD DRAWING STD-10-1.

7 NOTE: THE COST OF ALL MATERIALS AND LABOR NECESSARY FOR THE INSTALLATION OF 18 ANCHOR BOLT ASSEMBLIES SHALL BE INCLUDED IN THE UNIT PRICE BID FOR CLASS "A" CONCRETE (BRIDGES), ITEM 604M03.01.

8 NOTE: PRIOR TO CONSTRUCTION OF THE PAVEMENT AT BRIDGE ENDS, THE CONTRACTOR SHALL SUBMIT A PROPOSED BILL OF STEEL TO THE ENGINEER FOR APPROVAL.

9 NOTE: COST OF 22 BRIDGE DECK DRAINS TO BE INCLUDED IN THE UNIT PRICE BID FOR THE PARAPET.

10 NOTE: THE UNIT PRICE BID FOR THE CAST STEEL POINTS SHALL INCLUDE FURNISHING AND INSTALLATION TO THE PILES.

CABRINA M. DIETERS
INTERIM DIRECTOR OF ENGINEERING
TN DEPARTMENT OF AGRICULTURE
STATE OF TENNESSEE

DIVISION OF METRIC STRUCTURES

CORRECT Wayne J. Seger
ENGINEER OF STRUCTURES

STATE OF TENNESSEE
DEPARTMENT OF TRANSPORTATION
BRIDGE NO. 3
GENERAL NOTES AND
ESTIMATED QUANTITIES
COLLECTOR NO. 3
OVER
STATE ROUTE 115
STATION 112+065.302
KNOX COUNTY
2015

| | | | |
|---|---|---|---|
| DESIGNED BY | ABDISALAN DAHIR | DATE | 7-15 |
| DRAWN BY | KEVIN MARTINKO | DATE | 7-15 |
| SUPERVISED BY | BIRDWELL/DIETERS | DATE | 7-15 |
| CHECKED BY | ABDISALAN DAHIR | DATE | 8-15 |

U-73-101

FOUNDATIONDATA1138.DGN

CONST. NO. 47026-3279-14

| PROJECT NO. | YEAR | SHEET NO. |
|---|---|---|
| NH-115(54) | 2015 | |

REVISIONS

| NO. | DATE | BY | BRIEF DESCRIPTION |
|---|---|---|---|
| | | | |

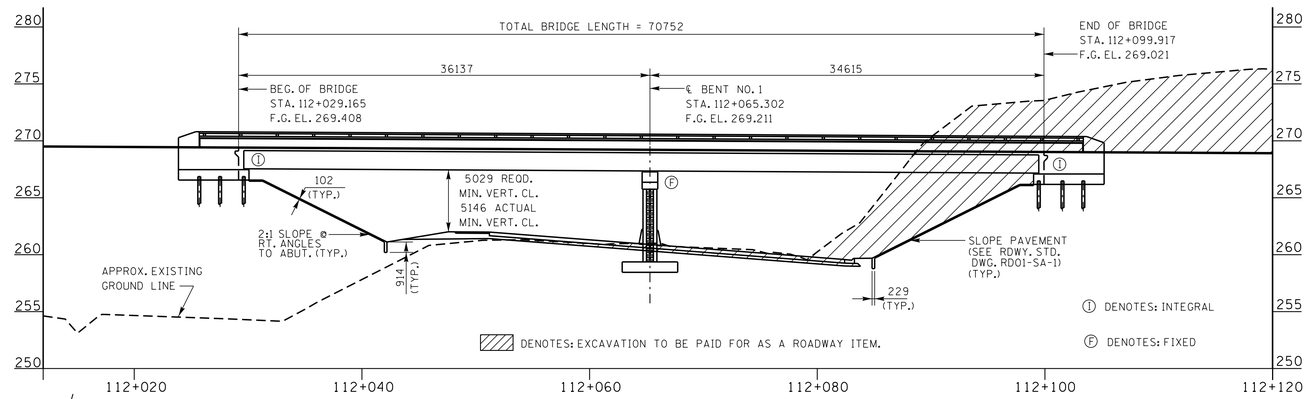


ELEVATION

(AT RT. ΔS TO ℄ SURVEY COLLECTOR NO. 3)
(SCALE: 1:15)

SR115-3
PI 12+178.090
N 178,089.9850
E 784,461.6602
Δs 32° 47′ 57″ (RT)
Δc 16° 56′ 50″ (RT)
R 600.000
Lc 177.472
Ls 166.000
θs 7° 55′ 33″
LT 110.778
ST 55.434
Xc 165.683
Yc 7.644
k 82.947
p 1.912
Ts 260.095
Es 6.622
S.E. 7.7% RT
TRANS LENGTH 166.000
DESIGN SPEED 110 km/h

COLLECTOR NO.3-1
PI 112+153.187
N 178,036.9890
E 784,570.7119
Δ 105° 46′ 00″ (LT)
R 40.000
Lc 73.839
T 52.858
E 26.287
S.E. 3.9%
TRANS. LENGTH 28
DESIGN SPEED 30km/h

DESIGN SPECIFICATIONS: AASHTO 2012 LRFD BRIDGE DESIGN SPECIFICATIONS (6TH EDITION) WITH INTERIMS. SEISMIC PERFORMANCE ZONE 1 WITH AS=0.190, SDS=0.340, SD1=0.119 (1000 YEAR RETURN PERIOD).

NOTES:

REQUIRED:

1) SUFFICIENT GROUND, ROCK, AND CORING INFORMATION FOR BRIDGE FOUNDATIONS.
2) APPROXIMATE EXISTING GROUND AND ROCK LINE.

BENCHMARKS:

BM-8
ELEV. 260.152
SINGLE NAIL IN LIGHT POLE
IN THE CENTER OF THE
ISLAND AT MOUNT LAKE
AN STATE ROUTE 115
(INTERSECTION POLE #39942)

NOTE: THIS DRAWING IS FOR FOUNDATION DATA ONLY AND IS NOT TO BE USED AS A LAYOUT.

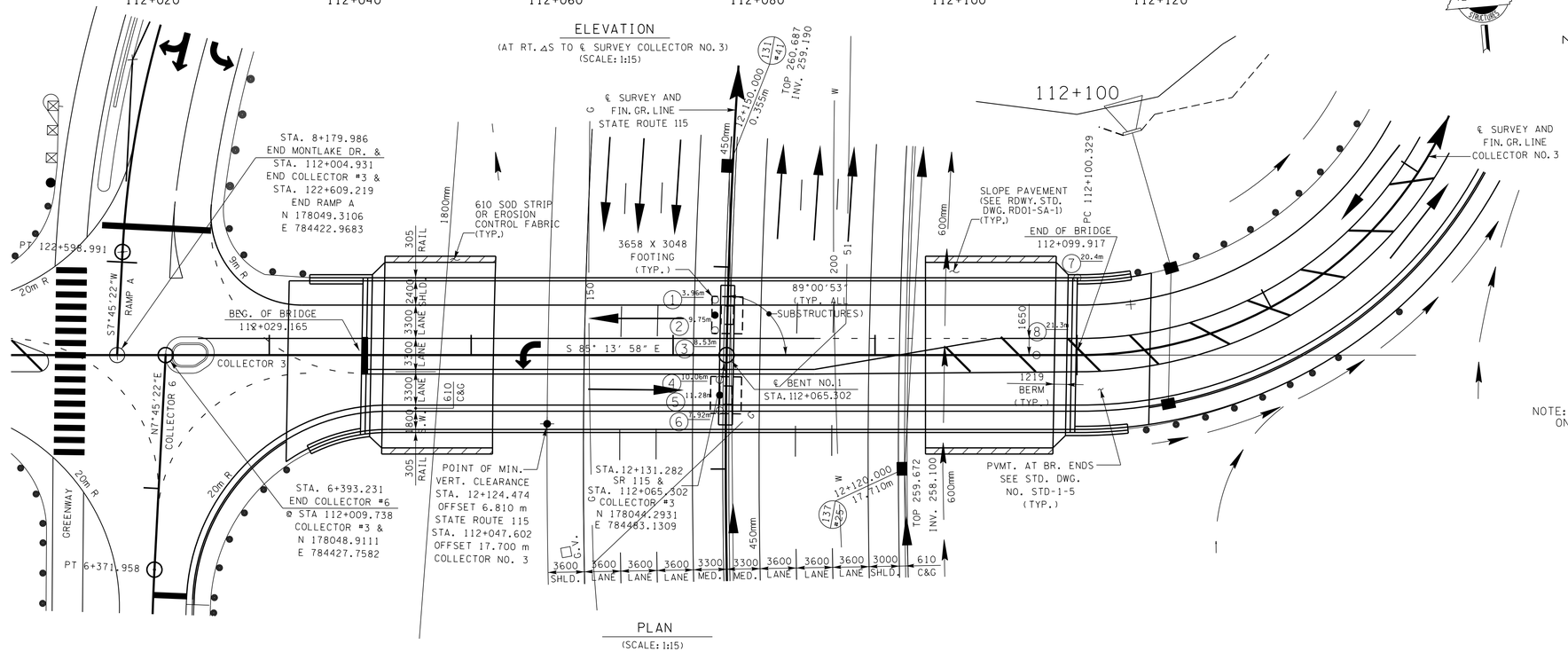


PLAN

(SCALE: 1:15)

NOTE: ALL DIMENSIONS SHOWN IN MILLIMETERS, WITH THE EXCEPTION OF STATIONS AND ELEVATIONS, UNLESS OTHERWISE NOTED.

STATE OF TENNESSEE
DEPARTMENT OF TRANSPORTATION

BRIDGE NO. 3
FOUNDATION DATA
COLLECTOR NO. 3
OVER
STATE ROUTE 115
STATION 112+065.302
KNOX COUNTY
2015

| | | | |
|---|---|---|---|
| DESIGNED BY | ABDISALAN DAHIR | DATE | 7-15 |
| DRAWN BY | KEVIN MARTINKO | DATE | 7-15 |
| SUPERVISED BY | BIRDWELL/DIETERS | DATE | 7-15 |
| CHECKED BY | ABDISALAN DAHIR | DATE | 8-15 |

CORRECT Wayne G. Feger
ENGINEER OF STRUCTURES

U-73-102

FOUNDATIONDATA1138.DGN

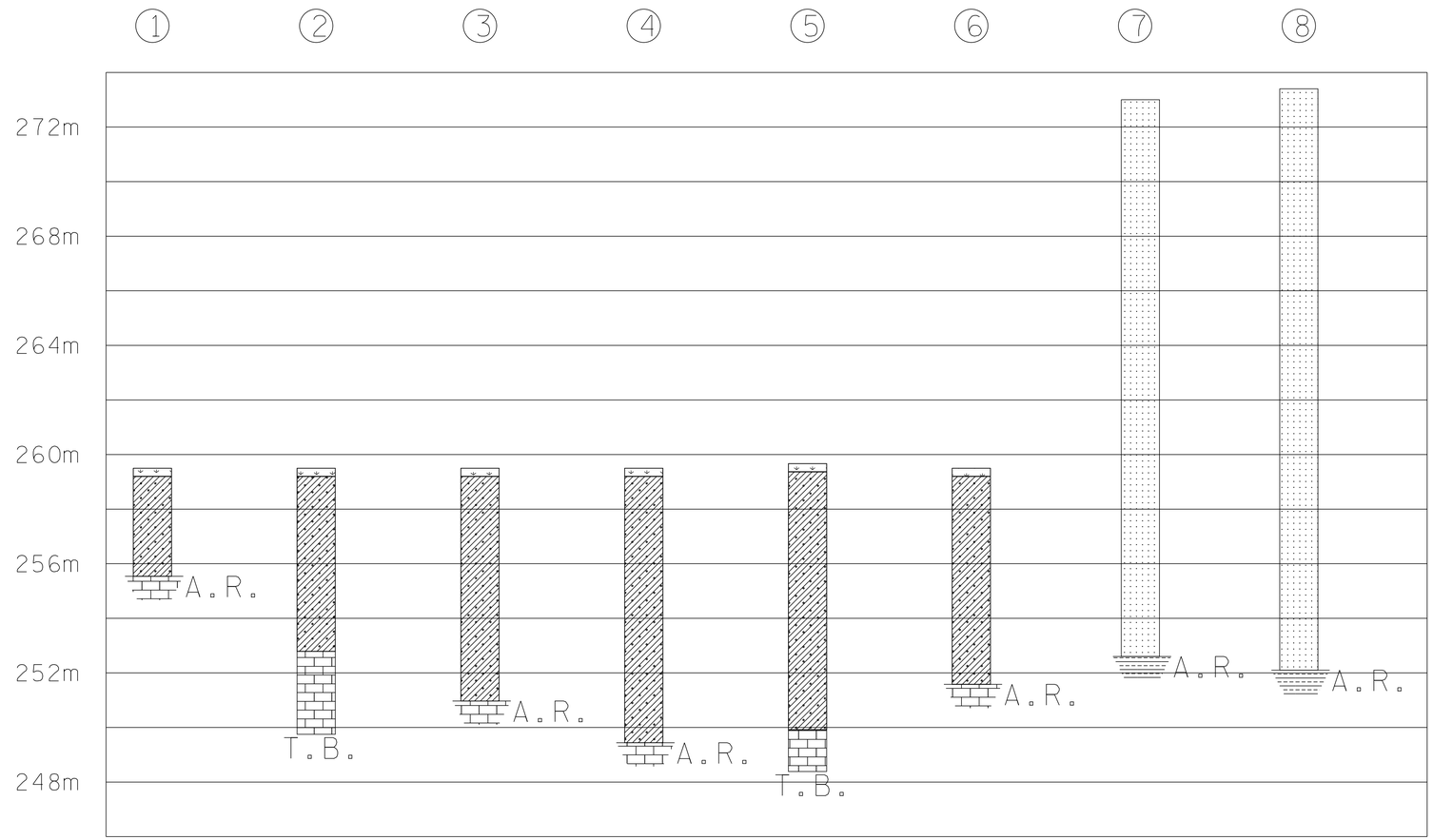


| CONST. NO. 47026-3279-14 | | |
|---|---|---|
| PROJECT NO. | YEAR | SHEET NO. |
| NH-115(54) | 2015 | |

REVISIONS

| NO. | DATE | BY | BRIEF DESCRIPTION |
|---|---|---|---|
| | | | |

## LEGEND

- GRASS & TOPSOIL
- SANDY CLAY (TYPE A MATERIAL)
- LIMESTONE -CRYSTALLINE (TYPE B MATERIAL)
- SANDSTONE (TYPE C MATERIAL)
- SILT (TYPE A MATERIAL)

TYPE MATERIAL-SEE DEFINITION OF TERMS USED FOR EARTHWORK GRADING CALCULATIONS SHEET.
A.R.= AUGER REFUSAL
T.B.= TERMINATED BORING

| BORING NO. | STATION | OFFSET | GROUND ELEVATION | ROCK ELEVATION | TOTAL DEPTH |
|---|---|---|---|---|---|
| 1 | 112+064.15 | LT ±5.48m | ±259.5m | ±255.5m | 3.96m |
| 2 | 112+064.15 | LT 3.956m | 259.5m | 252.79m | 9.75m |
| 3 | 112+064.15 | LT ±2.44m | ±259.5m | ±251.0m | 8.53m |
| 4 | 112+064.62 | RT ±2.44m | ±259.5m | ±249.4m | 10.06m |
| 5 | 112+064.62 | RT 3.966m | 259.667m | 249.91m | 11.28m |
| 6 | 112+064.62 | RT ±5.49m | ±259.5m | ±251.6m | 7.92m |
| 7 | 112+100.05 | LT 7.65m | 273.0m | 252.6m | 20.4m |
| 8 | 112+96.85 | ℄ | 273.4m | 252.1m | 21.3m |

NOTE:
BORING DEPICTIONS SHOWN ON FOUNDATION DATA SHEET INDICATE GENERAL SOIL AND ROCK TYPES AT THE SPECIFIC BORING LOCATIONS.

DIVISION OF STRUCTURES METRIC

NOTE: ALL DIMENSIONS SHOWN IN MILLIMETERS, WITH THE EXCEPTION OF STATIONS AND ELEVATIONS, UNLESS OTHERWISE NOTED.

STATE OF TENNESSEE
DEPARTMENT OF TRANSPORTATION

BRIDGE NO. 3
FOUNDATION DATA
COLLECTOR NO. 3
OVER
STATE ROUTE 115
STATION 112+065.302
KNOX COUNTY
2015

CORRECT Wayne J. Sepe
ENGINEER OF STRUCTURES

DESIGNED BY ABDISALAN DAHIR DATE 7-15
DRAWN BY KEVIN MARTINKO DATE 7-15
SUPERVISED BY BIRDWELL/DIETERS DATE 7-15
CHECKED BY ABDISALAN DAHIR DATE 8-15

U-73-103

SP1138BM.DGN

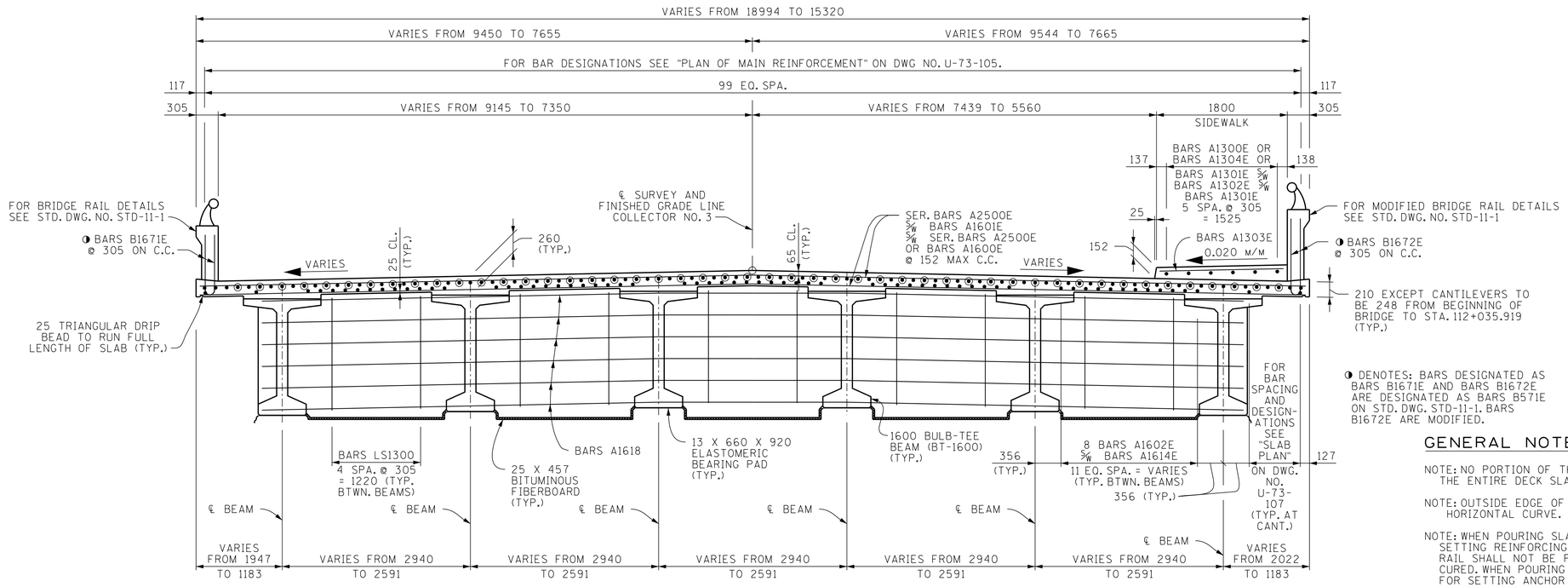


## TYPICAL CROSS-SECTION

(LOOKING FORWARD ON SURVEY)
(SHOWN AT SUPPORT)

◑ DENOTES: BARS DESIGNATED AS BARS B1671E AND BARS B1672E ARE DESIGNATED AS BARS B571E ON STD. DWG. STD-11-1. BARS B1672E ARE MODIFIED.

⦿ DENOTES: CUT-OFF BARS. SEE PLAN OF MAIN REINFORCEMENT FOR DESIGNATED BARS.

| CONST. NO. 47026-3279-14 | | |
|---|---|---|
| PROJECT NO. | YEAR | SHEET NO. |
| NH-115(54) | 2015 | |

REVISIONS

| NO. | DATE | BY | BRIEF DESCRIPTION |
|---|---|---|---|
| | | | |

## GENERAL NOTES

NOTE: NO PORTION OF THE BRIDGE RAIL SHALL BE POURED UNTIL THE ENTIRE DECK SLAB IS IN PLACE.

NOTE: OUTSIDE EDGE OF SLAB AND BRIDGE RAIL TO CONFORM TO HORIZONTAL CURVE.

NOTE: WHEN POURING SLAB, PROVISIONS SHALL BE MADE FOR SETTING REINFORCING STEEL FOR BRIDGE RAIL. THE BRIDGE RAIL SHALL NOT BE POURED UNTIL THE SLAB IS POURED AND CURED. WHEN POURING BRIDGE RAIL, PROVISIONS SHALL BE MADE FOR SETTING ANCHOR BOLTS FOR BRIDGE RAILS. ALSO SEE STD. DRAWING NO. STD-11-1.

NOTE: THE CONTRACTOR IS SOLELY RESPONSIBLE FOR SUPPORTING THE BEAMS TO PREVENT DAMAGE DUE TO TWISTING OR OVERTURNING DURING ALL PHASES OF CONSTRUCTION. IT IS STRONGLY RECOMMENDED THAT THE TEMPORARY ERECTION DIAPHRAGMS BE INSTALLED AND THE PERMANENT INTERMEDIATE DIAPHRAGMS BE POURED AND CURED PRIOR TO PLACING ANY LOADS ON THE GIRDERS. HOWEVER, TEMPORARY ERECTION DIAPHRAGMS AND PERMANENT INTERMEDIATE DIAPHRAGMS MUST BE IN PLACE IN THE SPAN AT THE TIME THE SLAB IS POURED IN SAID SPAN.

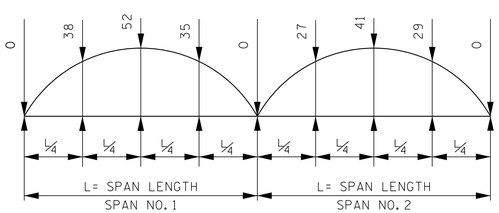


## DEAD LOAD CORRECTION CURVE

THIS CURVE IS FOR DEAD LOAD SLAB AND ALL DEAD LOADS THAT ARE APPLIED AFTER THE SLAB IS IN PLACE.

IF PRESTRESSED DECK PANELS ARE USED AND THE BEAMS ARE PROFILED AFTER PANELS ARE IN PLACE, REDUCE THE DEAD LOAD CORRECTION VALUES SHOWN BY 25% .

DECK CONCRETE POURING SEQUENCE: SLAB CONSTRUCTION JOINTS MAY BE LOCATED AT THE CONTRACTOR'S OPTION SUBJECT TO THE FOLLOWING:

1. NO CONSTRUCTION JOINT MAY BE LOCATED CLOSER THAN 3050mm OR FURTHER THAN 4575mm FROM AN INTERIOR SUPPORT.
2. THE SLAB IN THE MIDDLE SECTION OF BOTH ADJACENT SPANS MUST BE POURED TO WITHIN AT LEAST 4575mm OF THE SUPPORTS EITHER PRIOR TO OR CONCURRENTLY WITH THE SLAB OVER AN INTERIOR SUPPORT.
3. ALL SLAB CONSTRUCTION JOINTS SHALL BE IN ACCORDANCE WITH THE SLAB CONSTRUCTION JOINT DETAIL SHOWN BELOW.

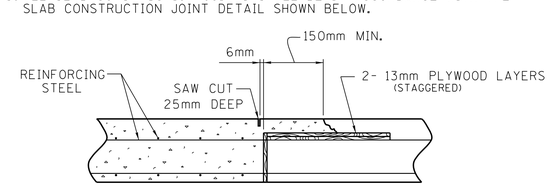


## SLAB CONSTRUCTION JOINT DETAIL

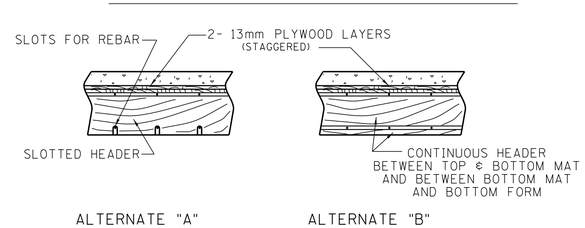


## ALTERNATE HEADER DETAILS

## ESTIMATED QUANTITIES

| CLASS "D" CONCRETE (BRIDGE DECK) M3 | EPOXY COATED REINFORCING STEEL KG | REINFORCING STEEL KG |
|---|---|---|
| 291 | 64412 | 371 |

DIVISION OF STRUCTURES — METRIC

NOTE: ALL DIMENSIONS SHOWN IN MILLIMETERS, WITH THE EXCEPTION OF STATIONS AND ELEVATIONS, UNLESS OTHERWISE NOTED.

STATE OF TENNESSEE
DEPARTMENT OF TRANSPORTATION
BRIDGE NO. 3
SUPERSTRUCTURE
COLLECTOR NO. 3
OVER
STATE ROUTE 115
STATION 112+065.302
KNOX COUNTY
2015

CABRINA M. DIETERS — STATE OF TENNESSEE — AGRICULTURE

CORRECT Wayne J. Segui
ENGINEER OF STRUCTURES

| | | | |
|---|---|---|---|
| DESIGNED BY | ABDISALAN DAHIR | DATE | 07-2014 |
| DRAWN BY | ROGER FOSTER | DATE | 02-2015 |
| SUPERVISED BY | FIELDS/DIETERS | DATE | 02-2015 |
| CHECKED BY | ABDISALAN DAHIR | DATE | 08-2015 |

U-73-104

SP1138BM.DGN

CONST. NO. 47026-3279-14

| PROJECT NO. | YEAR | SHEET NO. |
|---|---|---|
| NH-115(54) | 2015 | |

REVISIONS

| NO. | DATE | BY | BRIEF DESCRIPTION |
|---|---|---|---|
| | | | |

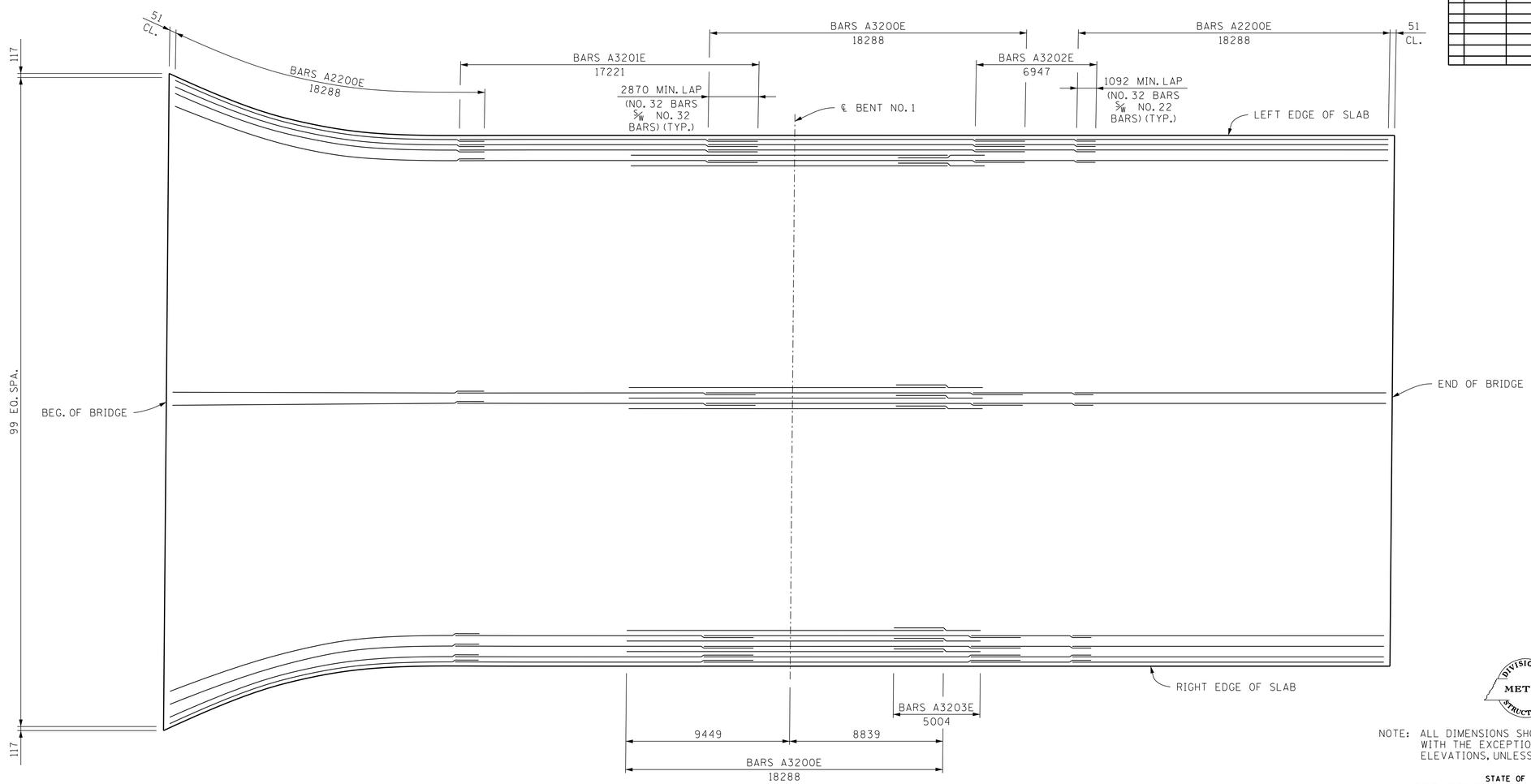


PLAN OF MAIN REINFORCEMENT

NOTE: ALL DIMENSIONS SHOWN IN MILLIMETERS, WITH THE EXCEPTION OF STATIONS AND ELEVATIONS, UNLESS OTHERWISE NOTED.

STATE OF TENNESSEE
DEPARTMENT OF TRANSPORTATION

BRIDGE NO. 3
SUPERSTRUCTURE DETAILS
COLLECTOR NO. 3
OVER
STATE ROUTE 115
STATION 112+065.302
KNOX COUNTY
2015

CORRECT _____
ENGINEER OF STRUCTURES

DESIGNED BY ABDISALAN DAHIR DATE 07-2014
DRAWN BY ROGER FOSTER DATE 02-2015
SUPERVISED BY FIELDS/DIETERS DATE 02-2015
CHECKED BY ABDISALAN DAHIR DATE 08-2015

U-73-105

SP1138BM.DGN

CONST. NO. 47026-3279-14

| PROJECT NO. | YEAR | SHEET NO. |
|---|---|---|
| NH-115(54) | 2015 | |

REVISIONS

| NO. | DATE | BY | BRIEF DESCRIPTION |
|---|---|---|---|
| | | | |

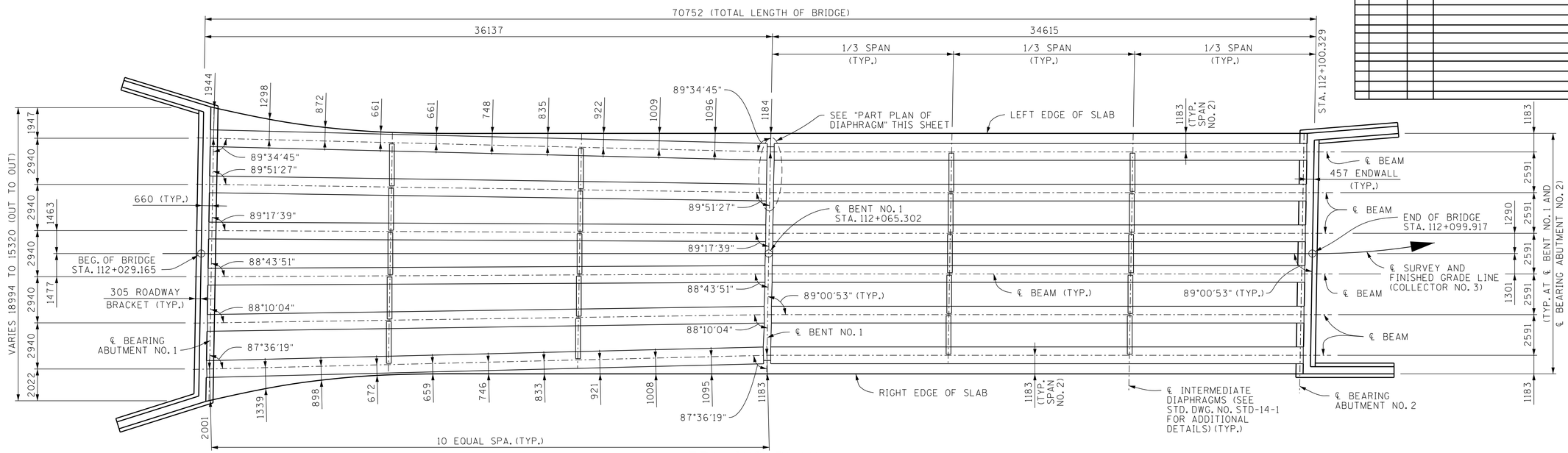


FRAMING PLAN

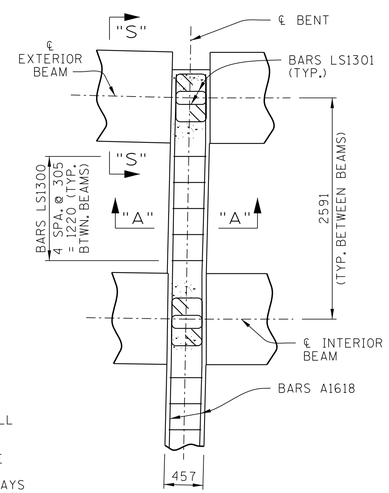


PART PLAN OF DIAPHRAGM

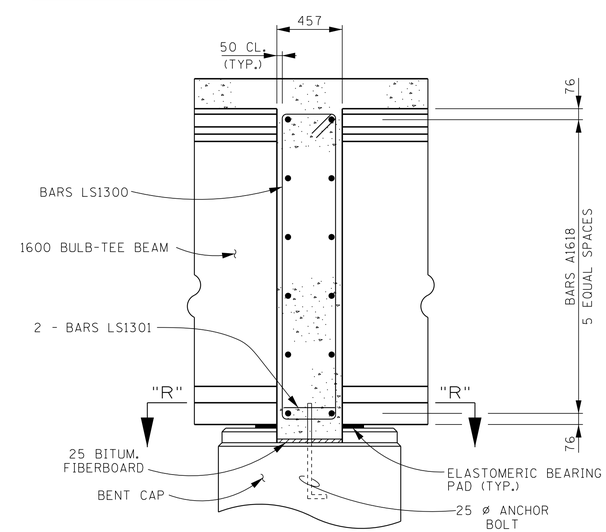


SECTION "A"-"A"

SPECIAL NOTE FOR ANCHOR BOLTS AT BENT: ANCHOR BOLT ASSEMBLIES AT BENT SHALL BE IN ACCORDANCE WITH STANDARD DRAWING STD-6-1.

NOTE: THE SUPPORT DIAPHRAGMS AT THE BENTS SHALL BE FORMED AND THE BOTTOM 380 MM POURED AS SOON AS POSSIBLE AFTER THE BEAMS HAVE BEEN SET. THE REMAINDER OF THE DIAPHRAGM SHALL BE POURED CONCURRENTLY WITH THE DECK SLAB. THE BEAMS SHALL ATTAIN AN AGE OF AT LEAST 90 DAYS PRIOR TO POURING THE REMAINDER OF THE SUPPORT DIAPHRAGMS AND DECK SLAB. ALL DIAPHRAGM CONCRETE SHALL BE INCLUDED IN THE QUANTITY FOR ITEM NO. 604M03.09.

DESIGNED BY ABDISALAN DAHIR DATE 07-2014
DRAWN BY ROGER FOSTER DATE 02-2015
SUPERVISED BY FIELDS/DIETERS DATE 02-2015
CHECKED BY ABDISALAN DAHIR DATE 08-2015

DIVISION OF METRIC STRUCTURES

NOTE: ALL DIMENSIONS SHOWN IN MILLIMETERS, WITH THE EXCEPTION OF STATIONS AND ELEVATIONS, UNLESS OTHERWISE NOTED.

STATE OF TENNESSEE
DEPARTMENT OF TRANSPORTATION
BRIDGE NO. 3
SUPERSTRUCTURE DETAILS
COLLECTOR NO. 3
OVER
STATE ROUTE 115
STATION 112+065.302
KNOX COUNTY
2015

CABRINA M. DIETERS — STATE OF TENNESSEE — DEPARTMENT OF AGRICULTURE

CORRECT Wayne J. Seger
ENGINEER OF STRUCTURES

U-73-106

SP1138BM.DGN

CONST. NO. 47026-3279-14

| PROJECT NO. | YEAR | SHEET NO. |
|---|---|---|
| NH-115(54) | 2015 | |

REVISIONS

| NO. | DATE | BY | BRIEF DESCRIPTION |
|---|---|---|---|
| | | | |

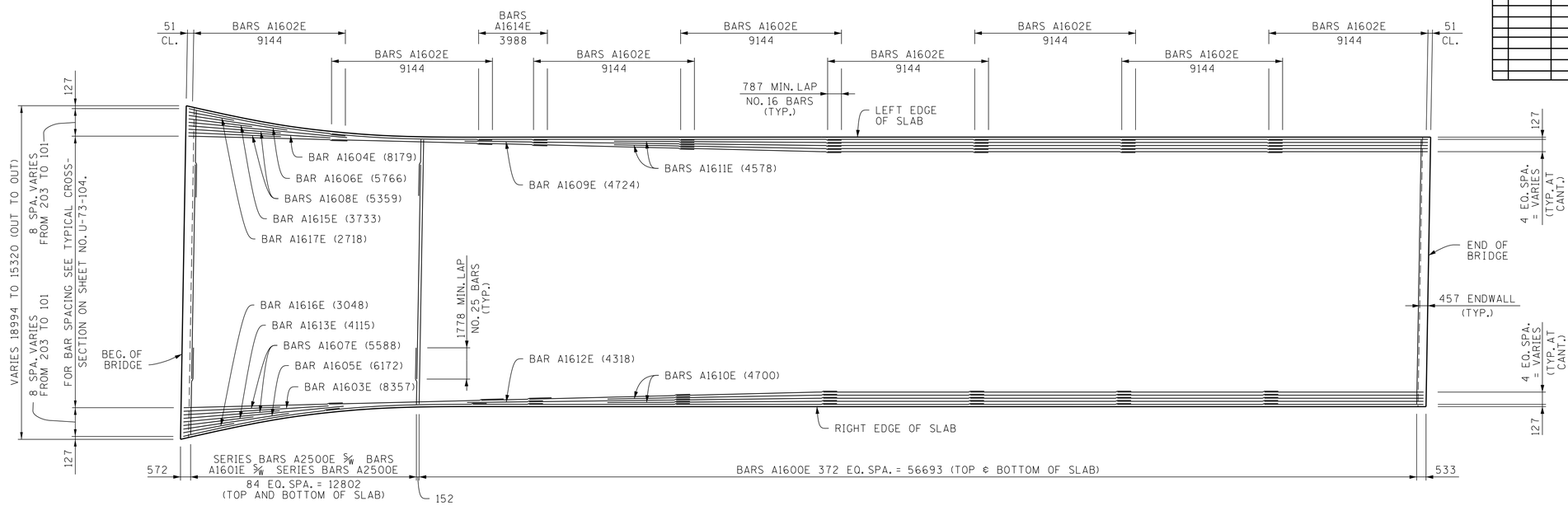


## SLAB PLAN

(SHOWING BOTTOM OF SLAB UNLESS OTHERWISE NOTED)
(MEASURED ALONG ℄ SURVEY)

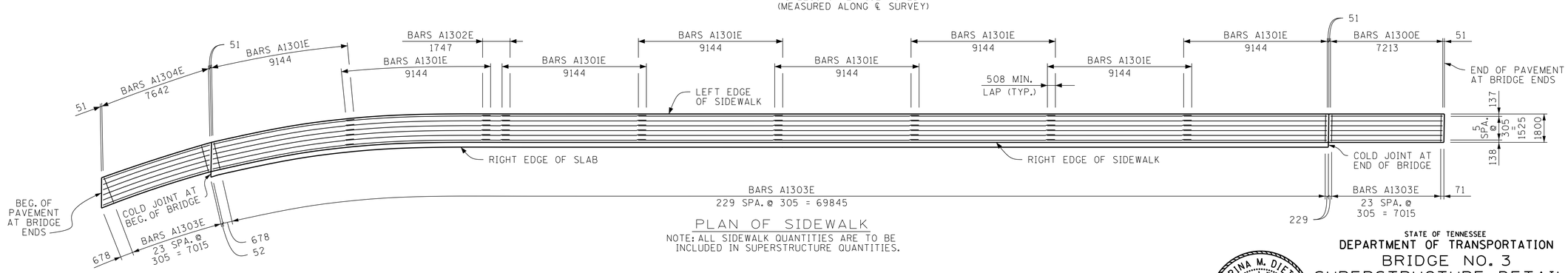


## PLAN OF SIDEWALK

NOTE: ALL SIDEWALK QUANTITIES ARE TO BE INCLUDED IN SUPERSTRUCTURE QUANTITIES.

DIVISION OF METRIC STRUCTURES

NOTE: ALL DIMENSIONS SHOWN IN MILLIMETERS, WITH THE EXCEPTION OF STATIONS AND ELEVATIONS, UNLESS OTHERWISE NOTED.

CABRINA M. DIETERS — STATE OF TENNESSEE — AGRICULTURE — 1796

STATE OF TENNESSEE
DEPARTMENT OF TRANSPORTATION

BRIDGE NO. 3
SUPERSTRUCTURE DETAILS
COLLECTOR NO. 3
OVER
STATE ROUTE 115
STATION 112+065.302
KNOX COUNTY
2015

CORRECT Wayne J. Seger
ENGINEER OF STRUCTURES

| | | | |
|---|---|---|---|
| DESIGNED BY | ABDISALAN DAHIR | DATE | 07-2014 |
| DRAWN BY | ROGER FOSTER | DATE | 02-2015 |
| SUPERVISED BY | FIELDS/DIETERS | DATE | 02-2015 |
| CHECKED BY | ABDISALAN DAHIR | DATE | 08-2015 |

U-73-107

TE1138BM.DGN

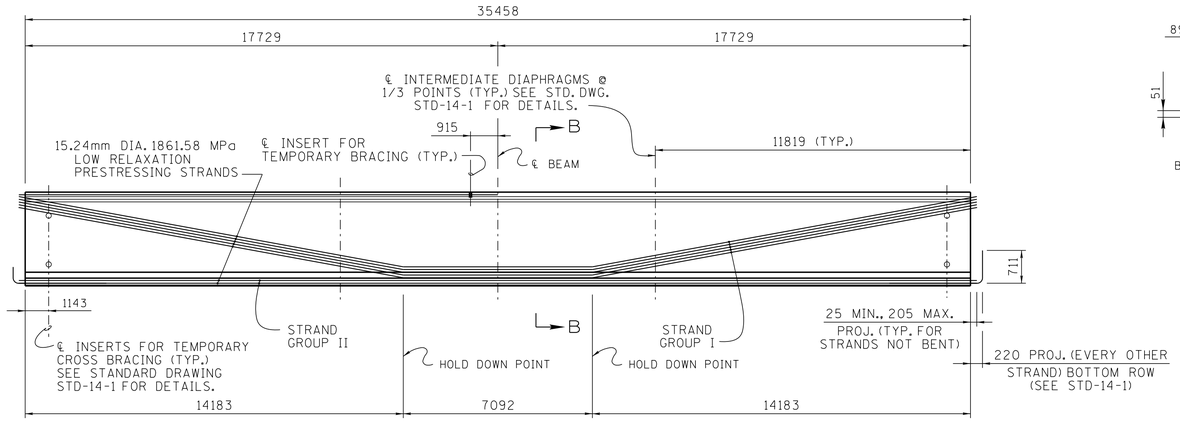


ELEVATION
(SHOWING PRESTRESSING STRANDS)

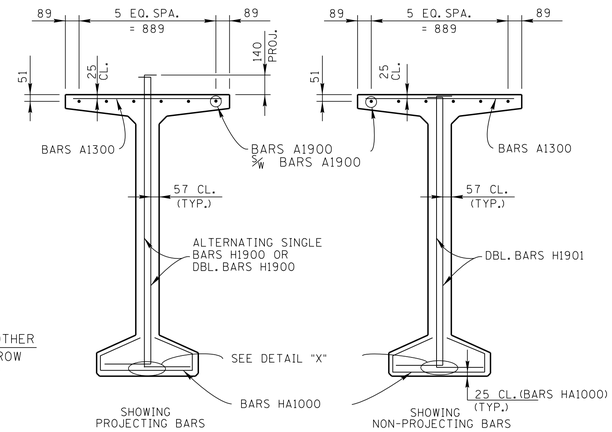


SECTION A-A

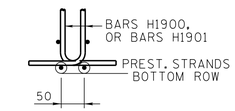


DETAIL "X"

| CONST. NO. 47026-3279-14 | | |
|---|---|---|
| PROJECT NO. | YEAR | SHEET NO. |
| NH-115(54) | 2015 | |

REVISIONS

| NO. | DATE | BY | BRIEF DESCRIPTION |
|---|---|---|---|
| | | | |

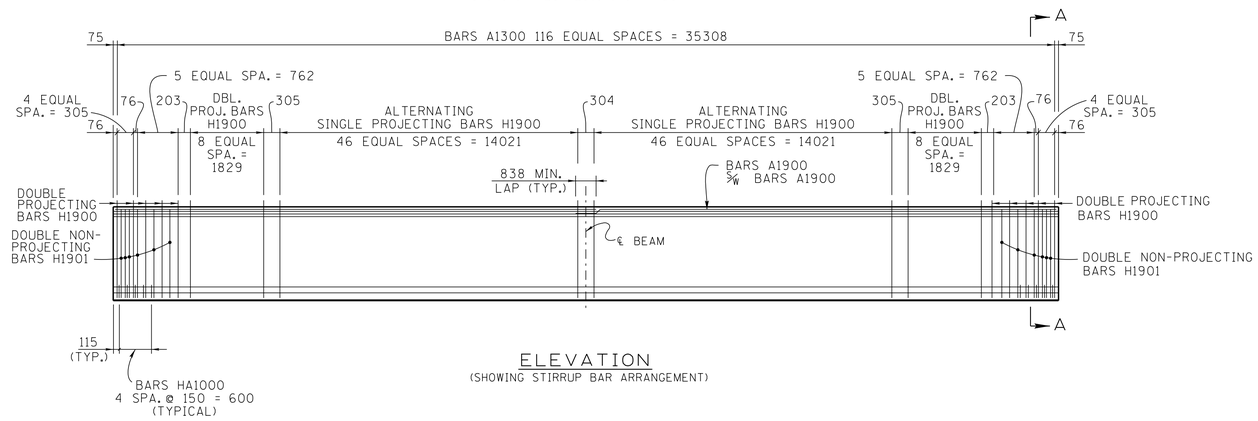


ELEVATION
(SHOWING STIRRUP BAR ARRANGEMENT)

## NOTES:

NOTE: SEE STD-14-1 FOR BULB-TEE BEAM STANDARD DETAILS, NOTES, AND REINFORCING.

ALL BEAMS TO BE BT-1600.

THE CONCRETE FOR THIS CONSTRUCTION SHALL BE OF SUCH PROPERTIES AS TO ATTAIN A COMPRESSIVE STRENGTH OF NOT LESS THAN 58.61 MPa AT THE AGE OF 28 DAYS AND STRESS TRANSFER SHALL NOT BE MADE TO THE BRIDGE MEMBER UNTIL THE TEST SPECIMENS INDICATE THAT THE CONCRETE HAS REACHED A COMPRESSIVE STRENGTH OF AT LEAST 44.82 MPa. SEE GENERAL NOTES FOR CONCRETE FINISHING NOTE.

ALL PRESTRESSING STRANDS SHALL BE 15.24mm DIAMETER ASTM GRADE 1861.58 MPa, 7 WIRE UNCOATED LOW RELAXATION PRESTRESSING STRANDS TO BE FULLY STRESSED UNLESS OTHERWISE NOTED.

NOTE: THE PRESTRESSED BEAMS SHALL ATTAIN AN AGE OF AT LEAST 90 DAYS PRIOR TO POURING THE SUPPORT DIAPHRAGMS (EXCLUDING BOTTOM 381 MM) AND DECK SLAB.

## PRESTRESSED BEAM DESIGN DATA - PER BEAM

LIVE LOAD DISTRIBUTION FACTOR FOR MOMENT: 0.932 LANES
LIVE LOAD DISTRIBUTION FACTOR FOR SHEAR: 0.935 LANES
COMPOSITE DEAD LOAD: DC = 3.225 kN/M
COMPOSITE DEAD LOAD: DW = 4.597 kN/M
COMPOSITE DESIGN SLAB f'c = 20.69 MPa
NOTE: DOWNWARD DEFLECTION UNDER TOTAL DL IS not ALLOWED.

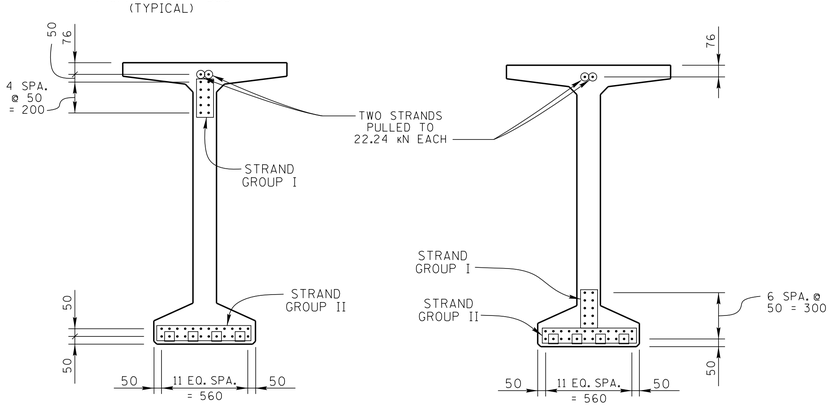


SECTION A-A
(SHOWING STRAND PATTERN)
⊡ DENOTES: BREAK BOND 1829 FROM BEAM ENDS.

SECTION B-B
(SHOWING STRAND PATTERN)
⊡ DENOTES: BREAK BOND 1829 FROM BEAM ENDS.

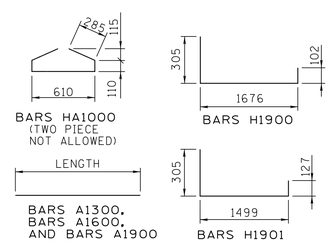


BILL OF STEEL
(PER BEAM)

| BAR | SIZE | NO. REQ'D | LENGTH |
|---|---|---|---|
| A1300 | 13 | 117 | 965 |
| A1600 | 16 | 6 | 1676 |
| A1900 | 19 | 12 | 18096 |
| H1900 | 19 | 150 | 2083 |
| H1901 | 19 | 24 | 1931 |
| HA1000 | 10 | 10 | 1400 |

ESTIMATED QUANTITIES - PER BEAM

| NO. BEAMS REQ'D. | PRESTRESSING STRANDS (LOW RELAXATION) KG | CLASS "A" CONCRETE M3 | REINFORCING STEEL KG |
|---|---|---|---|
| 6 | 1428 | 16.3 | 1423 |

DIVISION OF METRIC STRUCTURES

NOTE: ALL DIMENSIONS SHOWN IN MILLIMETERS, WITH THE EXCEPTION OF STATIONS AND ELEVATIONS, UNLESS OTHERWISE NOTED.

CABRINA M. DIETERS — REGISTERED ENGINEER — AGRICULTURE — STATE OF TENNESSEE

STATE OF TENNESSEE
DEPARTMENT OF TRANSPORTATION
BRIDGE NO. 3
PRESTRESSED BULB-TEE BEAM DETAILS
SPAN NO. 1
COLLECTOR NO. 3 OVER
STATE ROUTE 115
STATION 112+065.302
KNOX COUNTY
2015

CORRECT Wayne J. Tyger
ENGINEER OF STRUCTURES

| | | | |
|---|---|---|---|
| DESIGNED BY | ABDISALAN DAHIR | DATE | 07-2015 |
| DRAWN BY | ROGER FOSTER | DATE | 07-2015 |
| SUPERVISED BY | BIRDWELL/DIETERS | DATE | 07-2015 |
| CHECKED BY | ABDISALAN DAHIR | DATE | 08-2015 |

U-73-108

TE1138BM.DGN

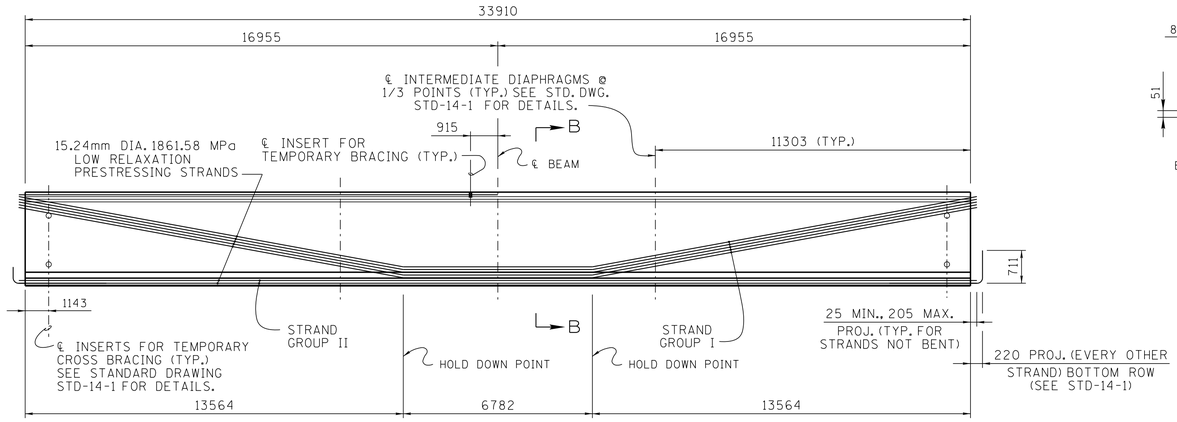


ELEVATION
(SHOWING PRESTRESSING STRANDS)

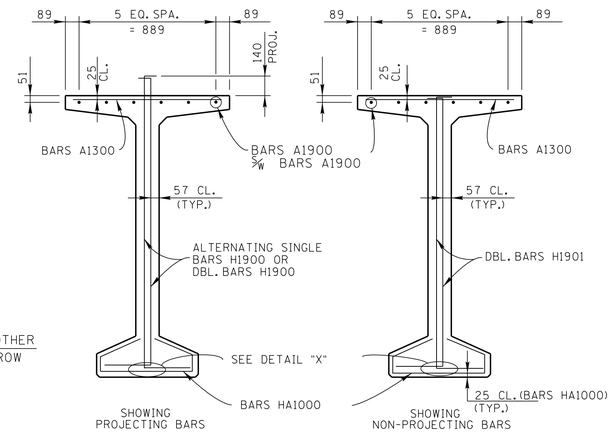


SECTION A-A

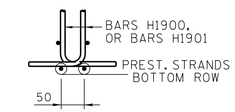


DETAIL "X"

CONST. NO. 47026-3279-14

| PROJECT NO. | YEAR | SHEET NO. |
|---|---|---|
| NH-115(54) | 2015 | |

REVISIONS

| NO. | DATE | BY | BRIEF DESCRIPTION |
|---|---|---|---|
| | | | |

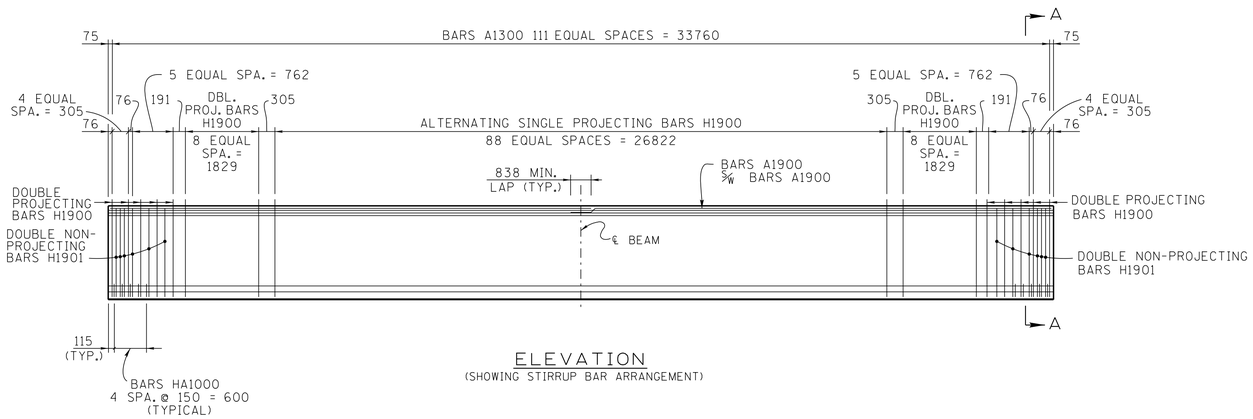


ELEVATION
(SHOWING STIRRUP BAR ARRANGEMENT)

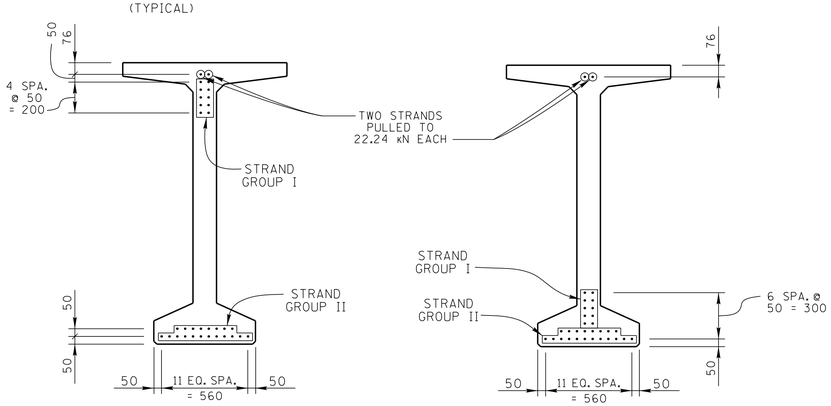


SECTION A-A
(SHOWING STRAND PATTERN)

SECTION B-B
(SHOWING STRAND PATTERN)

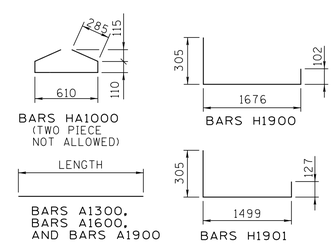


BILL OF STEEL
(PER BEAM)

| BAR | SIZE | NO. REQ'D | LENGTH |
|---|---|---|---|
| A1300 | 13 | 112 | 965 |
| A1600 | 16 | 6 | 1676 |
| A1900 | 19 | 12 | 17322 |
| H1900 | 19 | 145 | 2083 |
| H1901 | 19 | 24 | 1931 |
| HA1000 | 10 | 10 | 1400 |

## NOTES:

NOTE: SEE STD-14-1 FOR BULB-TEE BEAM STANDARD DETAILS, NOTES, AND REINFORCING.

ALL BEAMS TO BE BT-1600.

THE CONCRETE FOR THIS CONSTRUCTION SHALL BE OF SUCH PROPERTIES AS TO ATTAIN A COMPRESSIVE STRENGTH OF NOT LESS THAN 58.61 MPa AT THE AGE OF 28 DAYS AND STRESS TRANSFER SHALL NOT BE MADE TO THE BRIDGE MEMBER UNTIL THE TEST SPECIMENS INDICATE THAT THE CONCRETE HAS REACHED A COMPRESSIVE STRENGTH OF AT LEAST 44.82 MPa. SEE GENERAL NOTES FOR CONCRETE FINISHING NOTE.

ALL PRESTRESSING STRANDS SHALL BE 15.24mm DIAMETER ASTM GRADE 1861.58 MPa, 7 WIRE UNCOATED LOW RELAXATION PRESTRESSING STRANDS TO BE FULLY STRESSED UNLESS OTHERWISE NOTED.

NOTE: THE PRESTRESSED BEAMS SHALL ATTAIN AN AGE OF AT LEAST 90 DAYS PRIOR TO POURING THE SUPPORT DIAPHRAGMS (EXCLUDING BOTTOM 381 MM) AND DECK SLAB.

## PRESTRESSED BEAM DESIGN DATA - PER BEAM

LIVE LOAD DISTRIBUTION FACTOR FOR MOMENT: 0.901 LANES
LIVE LOAD DISTRIBUTION FACTOR FOR SHEAR: 0.904 LANES
COMPOSITE DEAD LOAD: DC = 3.225 kN/m
COMPOSITE DEAD LOAD: DW = 4.115 kN/m
COMPOSITE DESIGN SLAB f'c = 20.69 MPa
NOTE: DOWNWARD DEFLECTION UNDER TOTAL DL IS not ALLOWED.

ESTIMATED QUANTITIES - PER BEAM

| NO. BEAMS REQ'D. | PRESTRESSING STRANDS (LOW RELAXATION) KG | CLASS "A" CONCRETE M3 | REINFORCING STEEL KG |
|---|---|---|---|
| 6 | 1216 | 15.6 | 1374 |

DIVISION OF STRUCTURES METRIC

NOTE: ALL DIMENSIONS SHOWN IN MILLIMETERS, WITH THE EXCEPTION OF STATIONS AND ELEVATIONS, UNLESS OTHERWISE NOTED.

CABRINA M. DIETERS — STATE OF TENNESSEE — REGISTERED ENGINEER — AGRICULTURE — NO. 115174

STATE OF TENNESSEE
DEPARTMENT OF TRANSPORTATION
BRIDGE NO. 3
PRESTRESSED BULB-TEE BEAM DETAILS
SPAN NO. 2
COLLECTOR NO. 3 OVER
STATE ROUTE 115
STATION 112+065.302
KNOX COUNTY
2015

CORRECT Wayne J. Feger
ENGINEER OF STRUCTURES

U-73-109

DESIGNED BY ABDISALAN DAHIR DATE 07-2015
DRAWN BY ROGER FOSTER DATE 07-2015
SUPERVISED BY BIRDWELL/DIETERS DATE 07-2015
CHECKED BY ABDISALAN DAHIR DATE 08-2015

ABUT1_1138.DGN

CONST. NO. 47026-3279-14

| PROJECT NO. | YEAR | SHEET NO. |
|---|---|---|
| NH-115(54) | 2015 | |

REVISIONS

| NO. | DATE | BY | BRIEF DESCRIPTION |
|---|---|---|---|
| | | | |

NOTE: ELASTOMERIC PADS SHALL BE IN PLACE A MINIMUM OF ONE DAY BEFORE BEING DISTURBED BY SETTING BEAMS. PLACE RUBBER BONDING CEMENT IN SUCH A WAY THAT VISIBLE CONCRETE SURFACES WILL NOT BE STAINED.

NOTE: COST OF BRIDGE RAIL AND POST IS TO BE INCLUDED IN THE UNIT PRICE BID FOR BRIDGERAIL SYSTEM.

NOTE: NOT LESS THAN HALF OF THE SLAB IN THE END SPAN SHALL BE POURED PRIOR TO, OR CONCURRENTLY WITH, PLACEMENT OF ANY PART OF THE ABUTMENT BACKWALL. AT LEAST THE TOP 305 OF THE BACKWALL SHALL BE POURED CONCURRENTLY WITH THE END OF SLAB.

NOTE: WHEN POURING WINGWALLS, PROVISIONS SHALL BE MADE FOR SETTING REINFORCING STEEL FOR WINGPOST AND PARAPETS. FOR DETAILS OF WINGPOST AND PARAPET SEE STD. DWG. NO. STD-11-1.

NOTE: RISER BLOCKS SHALL BE POURED MONOLITHICALLY WITH ABUTMENT BEAM.

NOTE: WINGBEAM PILES SHALL BE DRIVEN TO THE PLANS TIP ELEVATION OR REFUSAL. SEISMIC ATTACHMENT IS NOT REQUIRED FOR WINGBEAM PILES.

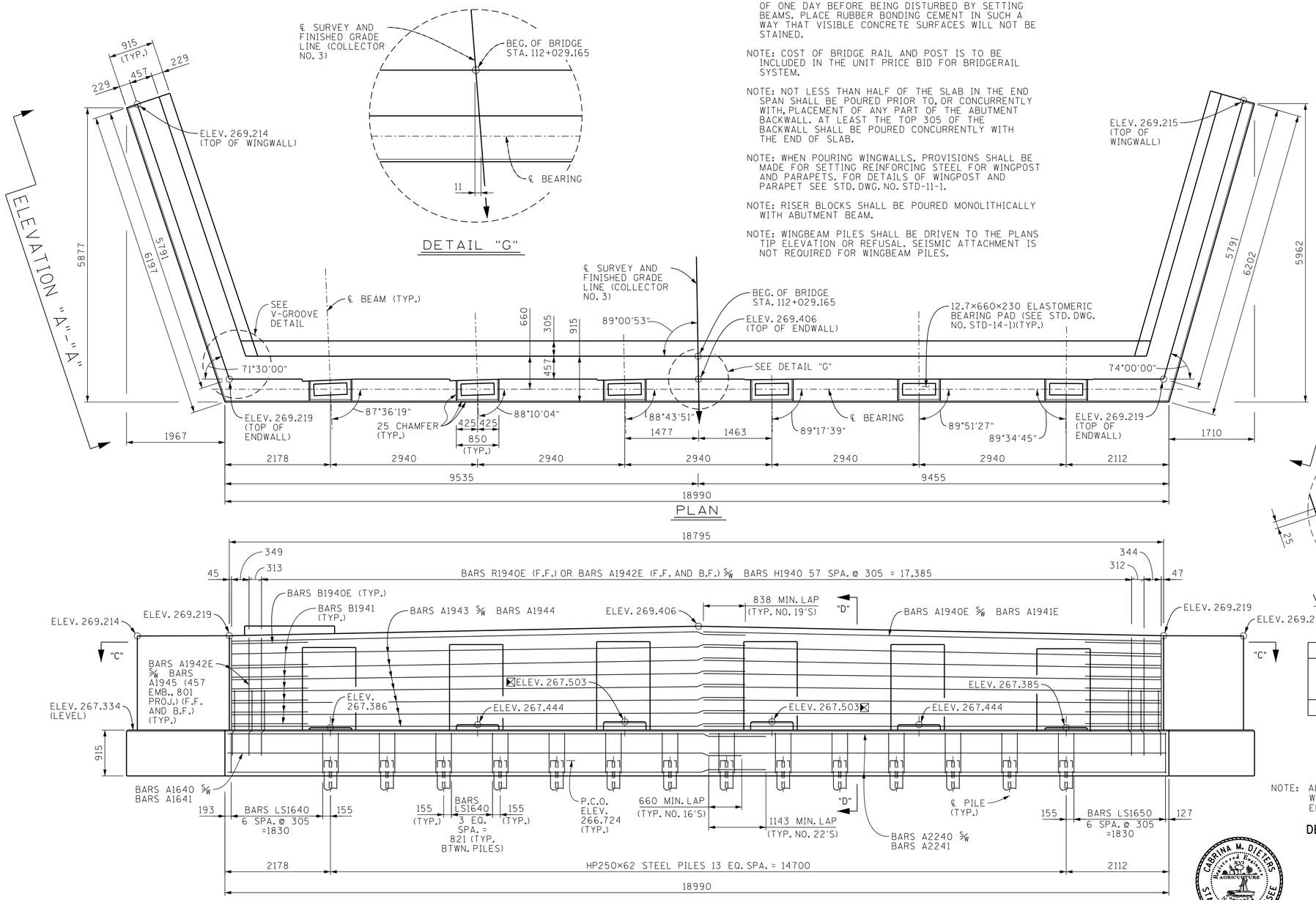


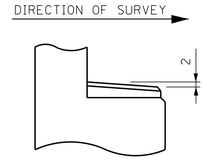


RISER BLOCK SLOPE DETAIL

NOTE: RISER BLOCK BEARING PAD SURFACE TO CONFORM TO BOTTOM OF BEAM GRADE.

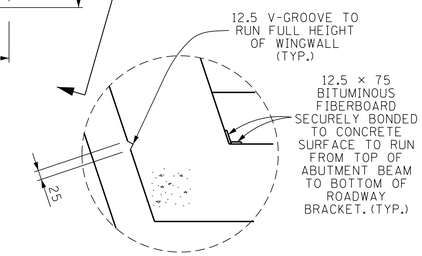


V-GROOVE DETAIL

| ESTIMATED QUANTITIES | | |
|---|---|---|
| CLASS "A" CONCRETE M3 | EPOXY COATED REINFORCING STEEL KG | REINFORCING STEEL KG |
| 54 | 1161 | 3565 |

NOTE: FOR ELEVATION "A"-"A" AND "B"-"B" SEE DWG. NO. U-73-112.

NOTE: FOR SECTION "C"-"C" SEE DWG. NO. U-73-111.

⊠ DENOTES: SEE RISER BLOCK REINFORCING DETAIL ON DWG. NO. U-73-111.

P.C.O. DENOTES: PILE CUT-OFF

B.F. DENOTES: BACK FACE

F.F. DENOTES: FRONT FACE

NOTE: FOR SECTION "D"-"D" SEE DWG. NO. U-73-111.

NOTE: ALL DIMENSIONS SHOWN IN MILLIMETERS, WITH THE EXCEPTION OF STATIONS AND ELEVATIONS, UNLESS OTHERWISE NOTED.

STATE OF TENNESSEE
DEPARTMENT OF TRANSPORTATION

BRIDGE NO. 3
ABUTMENT NO. 1
COLLECTOR NO. 3
OVER
STATE ROUTE 115
STATION 112+065.302
KNOX COUNTY
2015

| | | | |
|---|---|---|---|
| DESIGNED BY | ABDISALAN DAHIR | DATE | 7-15 |
| DRAWN BY | KEVIN MARTINKO | DATE | 7-15 |
| SUPERVISED BY | BIRDWELL/DIETERS | DATE | 7-15 |
| CHECKED BY | ABDISALAN DAHIR | DATE | 8-15 |

CORRECT Dwayne J. Seiler
ENGINEER OF STRUCTURES

U-73-110

ABUT1_1138.DGN

CONST. NO. 47026-3279-14

| PROJECT NO. | YEAR | SHEET NO. |
|---|---|---|
| NH-115(54) | 2015 | |

REVISIONS

| NO. | DATE | BY | BRIEF DESCRIPTION |
|---|---|---|---|
| | | | |

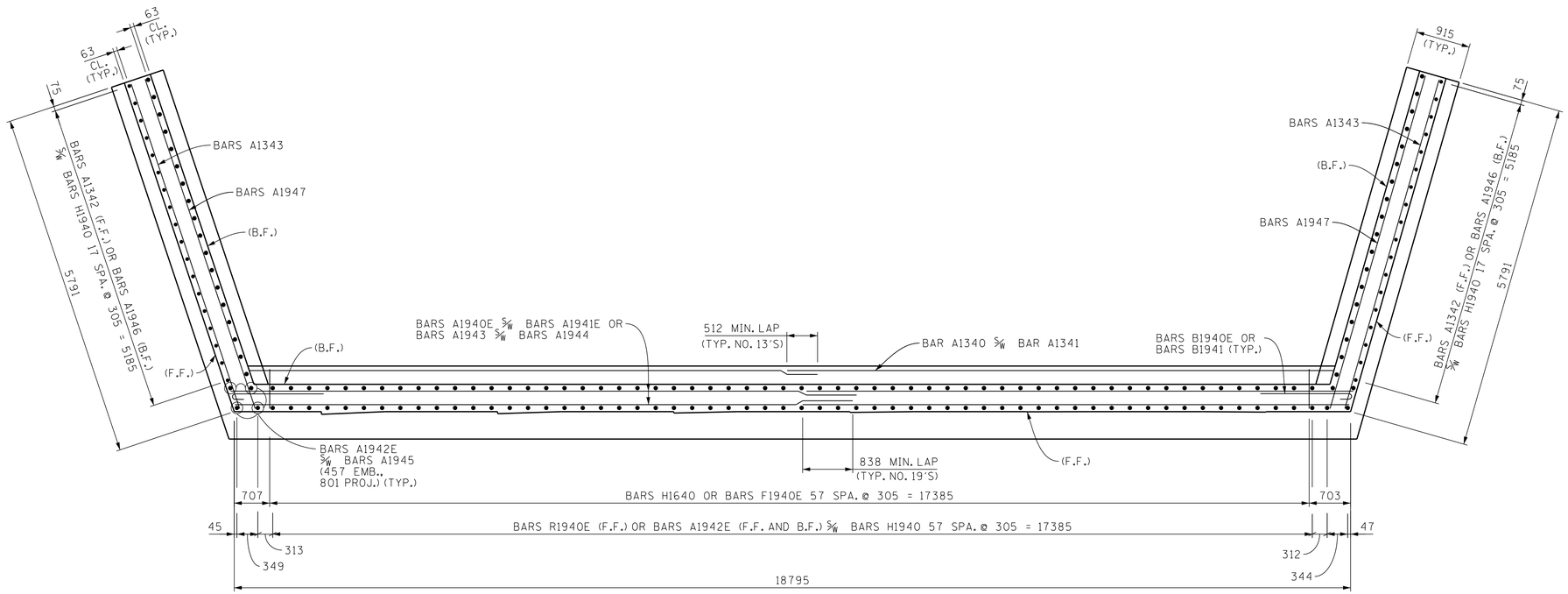


SECTION "C"-"C"

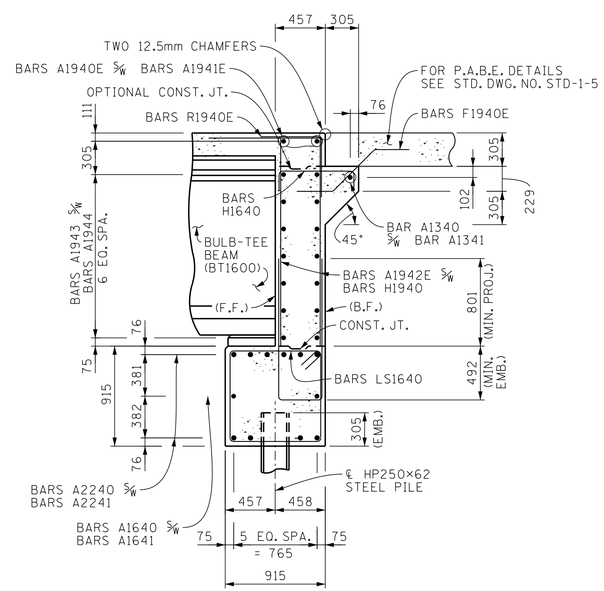


SECTION "D"-"D"

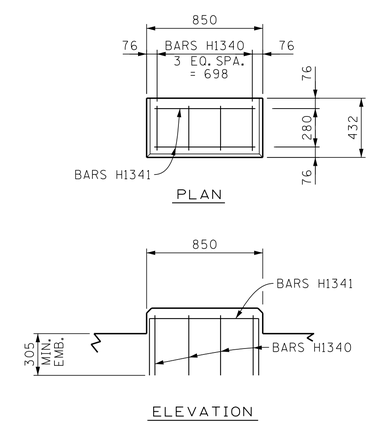


PLAN OF RISER BLOCK REINFORCING

B.F. DENOTES: BACK FACE

F.F. DENOTES: FRONT FACE

NOTE: ALL DIMENSIONS SHOWN IN MILLIMETERS, WITH THE EXCEPTION OF STATIONS AND ELEVATIONS, UNLESS OTHERWISE NOTED.

STATE OF TENNESSEE
DEPARTMENT OF TRANSPORTATION
BRIDGE NO. 3
ABUTMENT NO. 1 DETAILS
COLLECTOR NO. 3
OVER
STATE ROUTE 115
STATION 112+065.302
KNOX COUNTY
2015

| | | | |
|---|---|---|---|
| DESIGNED BY | ABDISALAN DAHIR | DATE | 7-15 |
| DRAWN BY | KEVIN MARTINKO | DATE | 7-15 |
| SUPERVISED BY | BIRDWELL/DIETERS | DATE | 7-15 |
| CHECKED BY | ABDISALAN DAHIR | DATE | 8-15 |

CORRECT Wayne J. Sieger
ENGINEER OF STRUCTURES

U-73-111

ABUT1_1138.DGN

| CONST. NO. 47026-3279-14 | | |
|---|---|---|
| PROJECT NO. | YEAR | SHEET NO. |
| NH-115(54) | 2015 | |

REVISIONS

| NO. | DATE | BY | BRIEF DESCRIPTION |
|---|---|---|---|
| | | | |
| | | | |
| | | | |
| | | | |
| | | | |

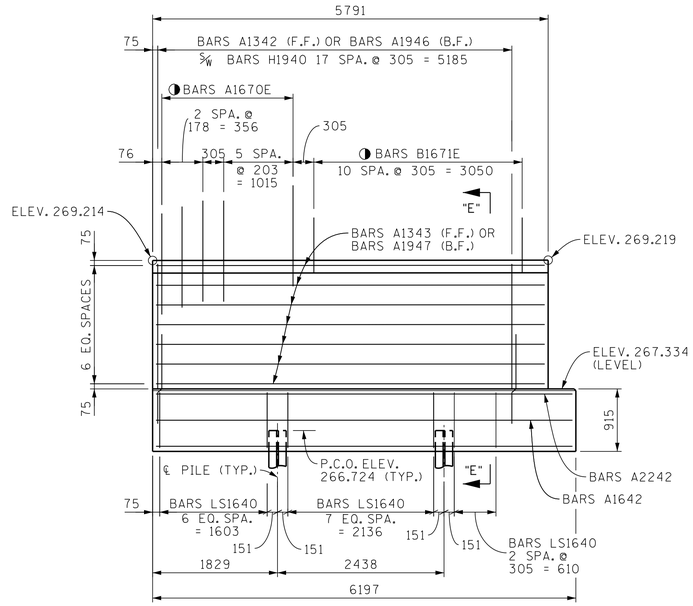


ELEVATION "A"-"A"

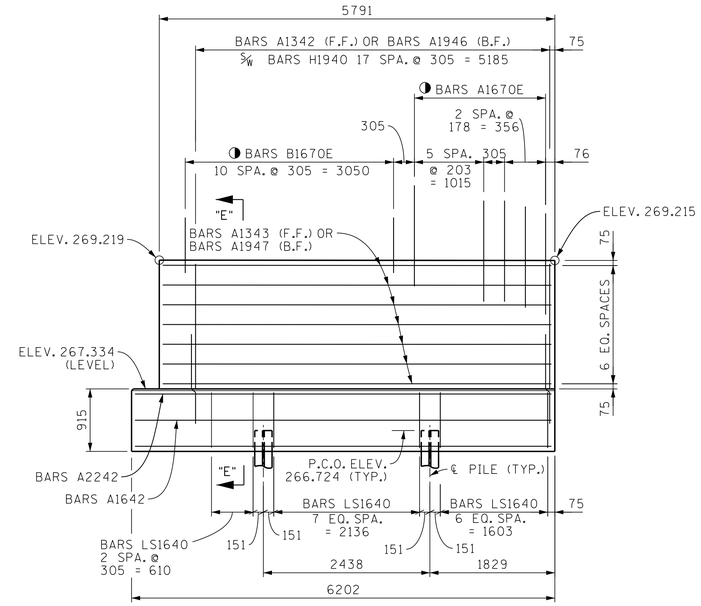


ELEVATION "B"-"B"

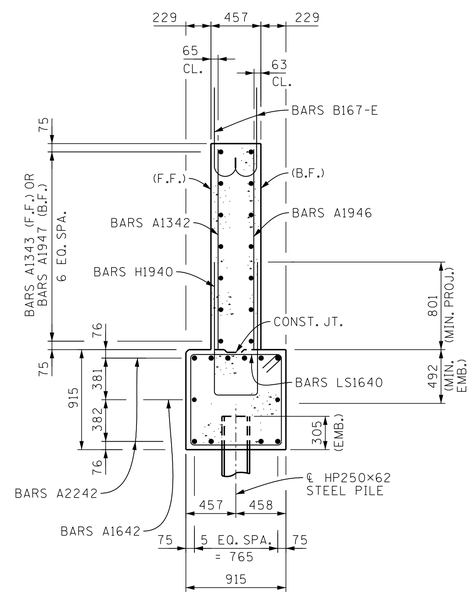


SECTION "E"-"E"

◑ DENOTES: BARS A1670E ARE DESIGNATED AS BARS A570E AND BARS B1670E AND BARS B1671E ARE DESIGNATED AS BARS B570E ON STD. DWG. NO. STD-11-1.

P.C.O. DENOTES: PILE CUT-OFF

B.F. DENOTES: BACK FACE

F.F. DENOTES: FRONT FACE

DIVISION OF METRIC STRUCTURES

NOTE: ALL DIMENSIONS SHOWN IN MILLIMETERS, WITH THE EXCEPTION OF STATIONS AND ELEVATIONS, UNLESS OTHERWISE NOTED.

CARRINA M. DIETERS — STATE OF TENNESSEE — DEPARTMENT OF AGRICULTURE

STATE OF TENNESSEE
DEPARTMENT OF TRANSPORTATION
BRIDGE NO. 3
ABUTMENT NO. 1 DETAILS
COLLECTOR NO. 3
OVER
STATE ROUTE 115
STATION 112+065.302
KNOX COUNTY
2015

CORRECT Wayne J. Sager
ENGINEER OF STRUCTURES

| | | | |
|---|---|---|---|
| DESIGNED BY | ABDISALAN DAHIR | DATE | 7-15 |
| DRAWN BY | KEVIN MARTINKO | DATE | 7-15 |
| SUPERVISED BY | BIRDWELL/DIETERS | DATE | 7-15 |
| CHECKED BY | ABDISALAN DAHIR | DATE | 8-15 |

U-73-112

ABUT2-1138.DGN

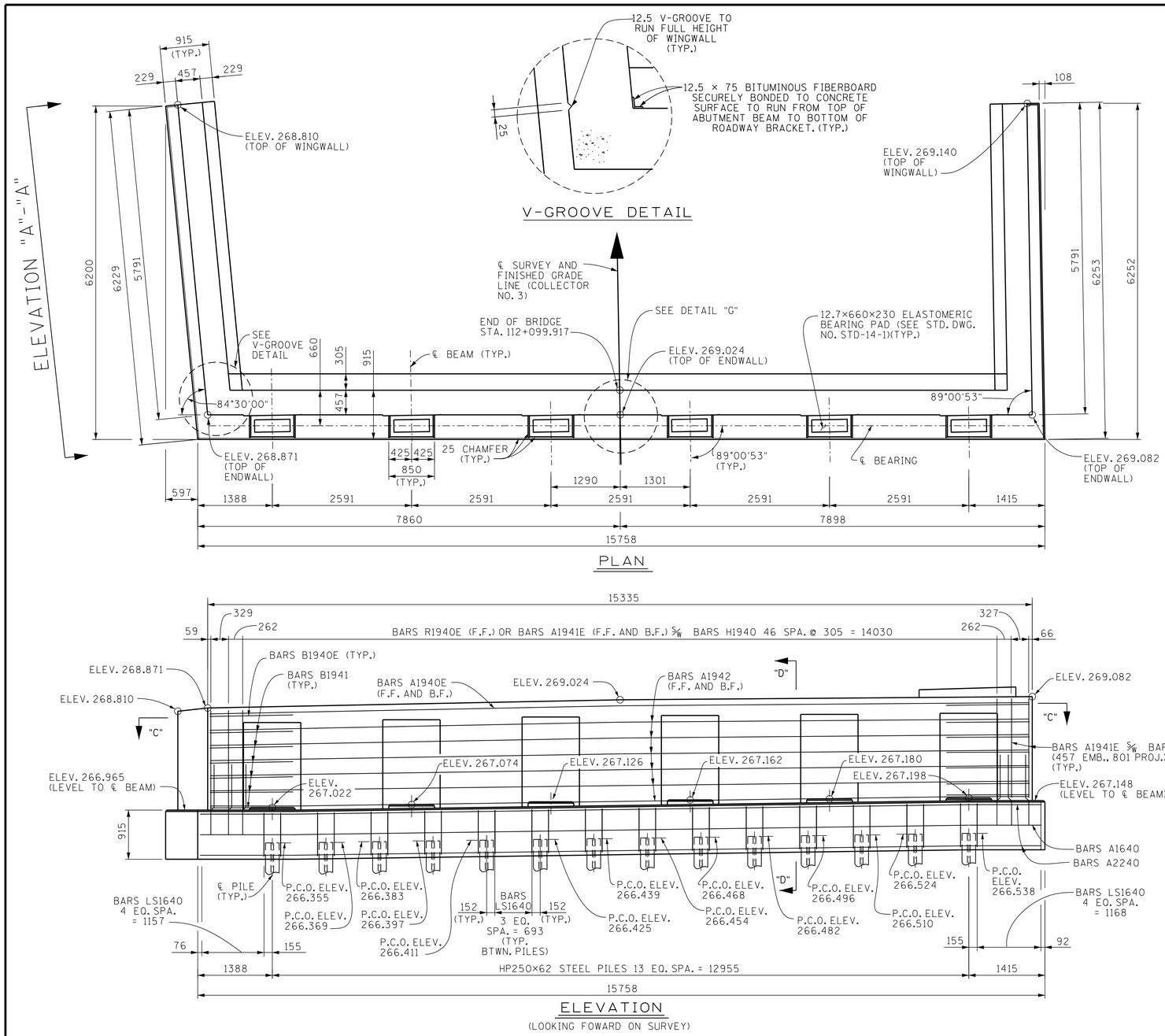


CONST. NO. 47026-3279-14

| PROJECT NO. | YEAR | SHEET NO. |
|---|---|---|
| NH-115(54) | 2015 | |

REVISIONS

| NO. | DATE | BY | BRIEF DESCRIPTION |
|---|---|---|---|
| | | | |
| | | | |
| | | | |
| | | | |
| | | | |

NOTE: ELASTOMERIC PADS SHALL BE IN PLACE A MINIMUM OF ONE DAY BEFORE BEING DISTURBED BY SETTING BEAMS. PLACE RUBBER BONDING CEMENT IN SUCH A WAY THAT VISIBLE CONCRETE SURFACES WILL NOT BE STAINED.

NOTE: COST OF BRIDGE RAIL AND POST IS TO BE INCLUDED IN THE UNIT PRICE BID FOR BRIDGERAIL SYSTEM.

NOTE: NOT LESS THAN HALF OF THE SLAB IN THE END SPAN SHALL BE POURED PRIOR TO, OR CONCURRENTLY WITH, PLACEMENT OF ANY PART OF THE ABUTMENT BACKWALL. AT LEAST THE TOP 305 OF THE BACKWALL SHALL BE POURED CONCURRENTLY WITH THE END OF SLAB.

NOTE: WHEN POURING WINGWALLS, PROVISIONS SHALL BE MADE FOR SETTING REINFORCING STEEL FOR WINGPOST AND PARAPETS. FOR DETAILS OF WINGPOST AND PARAPET SEE STD. DWG. NO. STD-11-1.

NOTE: RISER BLOCKS SHALL BE POURED MONOLITHICALLY WITH ABUTMENT BEAM.

NOTE: WINGBEAM PILES SHALL BE DRIVEN TO THE PLANS TIP ELEVATION OR REFUSAL. SEISMIC ATTACHMENT IS NOT REQUIRED FOR WINGBEAM PILES.

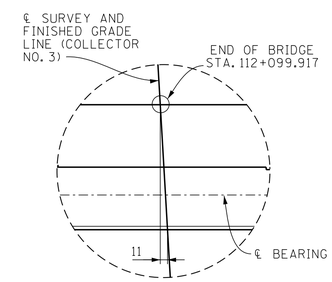


DETAIL "G"

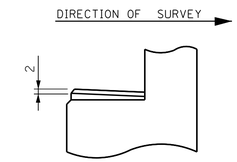


RISER BLOCK SLOPE DETAIL

NOTE: RISER BLOCK BEARING PAD SURFACE TO CONFORM TO BOTTOM OF BEAM GRADE.

ESTIMATED QUANTITIES

| CLASS "A" CONCRETE M3 | EPOXY COATED REINFORCING STEEL KG | REINFORCING STEEL KG |
|---|---|---|
| 47 | 977 | 3047 |

DIVISION OF STRUCTURES METRIC

NOTE: ALL DIMENSIONS SHOWN IN MILLIMETERS, WITH THE EXCEPTION OF STATIONS AND ELEVATIONS, UNLESS OTHERWISE NOTED.

CABRINA M. DIETERS — STATE OF TENNESSEE — AGRICULTURE

STATE OF TENNESSEE
DEPARTMENT OF TRANSPORTATION
BRIDGE NO. 3
ABUTMENT NO. 2
COLLECTOR NO. 3
OVER
STATE ROUTE 115
STATION 112+065.302
KNOX COUNTY
2015

P.C.O. DENOTES: PILE CUT-OFF
B.F. DENOTES: BACK FACE
F.F. DENOTES: FRONT FACE
NOTE: FOR SECTION "E"-"E" SEE DWG. NO. U-73-115.
NOTE: FOR SECTION "C"-"C" AND "D"-"D" SEE DWG. NO. U-73-114.
NOTE: FOR ELEVATION "A"-"A" AND "B"-"B" SEE DWG. NO. U-73-115.

| | | | |
|---|---|---|---|
| DESIGNED BY | ABDISALAN DAHIR | DATE | 7-15 |
| DRAWN BY | JERRY W. SIMPSON | DATE | 7-15 |
| SUPERVISED BY | BIRDWELL/DIETERS | DATE | 7-15 |
| CHECKED BY | ABDISALAN DAHIR | DATE | 8-15 |

CORRECT Wayne J. Sieger
ENGINEER OF STRUCTURES

U-73-113

ABUT2-1138.DGN

CONST. NO. 47026-3279-14

| PROJECT NO. | YEAR | SHEET NO. |
|---|---|---|
| NH-115(54) | 2015 | |

REVISIONS

| NO. | DATE | BY | BRIEF DESCRIPTION |
|---|---|---|---|
| | | | |

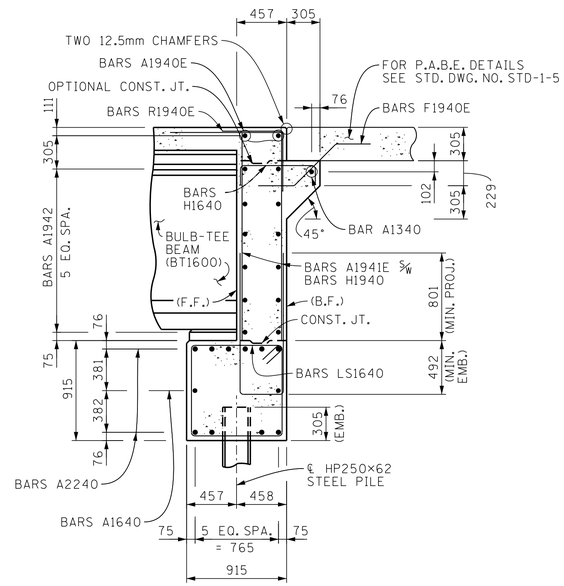


SECTION "D"-"D"

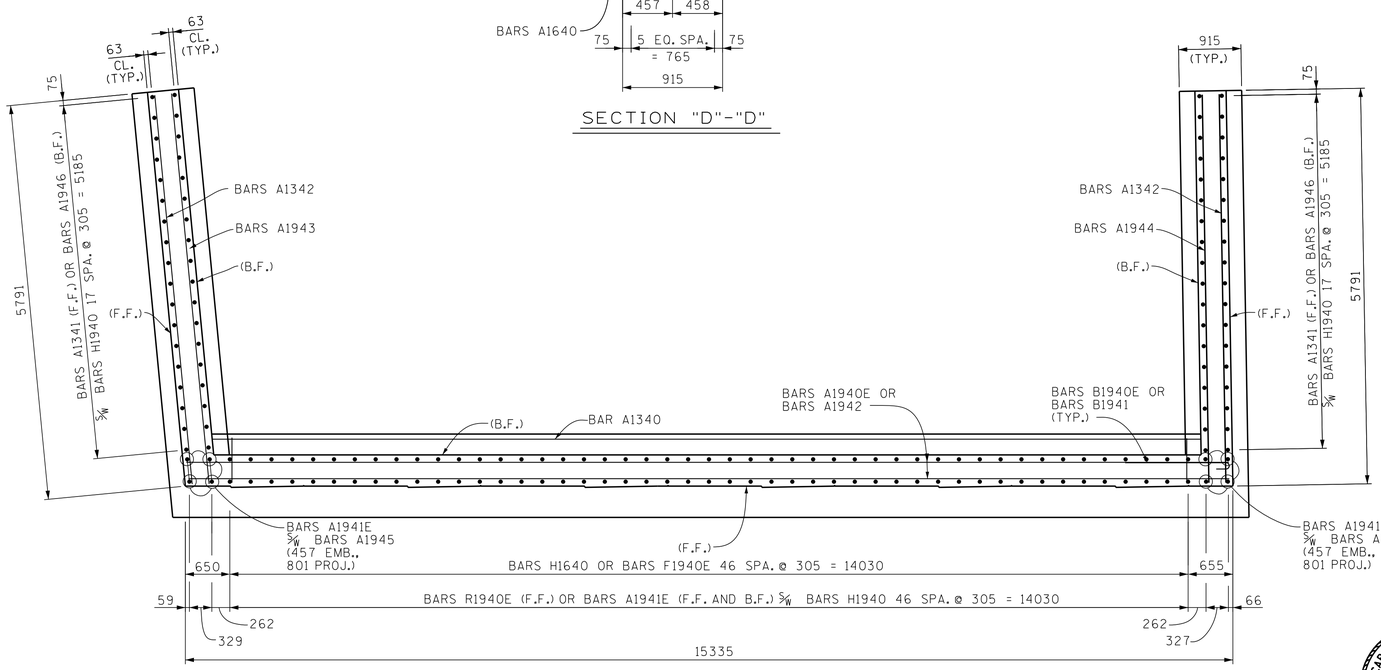


SECTION "C"-"C"

B.F. DENOTES: BACK FACE

F.F. DENOTES: FRONT FACE

NOTE: ALL DIMENSIONS SHOWN IN MILLIMETERS, WITH THE EXCEPTION OF STATIONS AND ELEVATIONS, UNLESS OTHERWISE NOTED.

STATE OF TENNESSEE
**DEPARTMENT OF TRANSPORTATION**

BRIDGE NO. 3
ABUTMENT NO. 2 DETAILS
COLLECTOR NO. 3
OVER
STATE ROUTE 115
STATION 112+065.302
KNOX COUNTY
2015

| | | | |
|---|---|---|---|
| DESIGNED BY | ABDISALAN DAHIR | DATE | 7-15 |
| DRAWN BY | JERRY W. SIMPSON | DATE | 7-15 |
| SUPERVISED BY | BIRDWELL/DIETERS | DATE | 7-15 |
| CHECKED BY | ABDISALAN DAHIR | DATE | 8-15 |

CORRECT Wayne G. Sieger
ENGINEER OF STRUCTURES

U-73-114

ABUT2-1138.DGN

CONST. NO. 47026-3279-14

| PROJECT NO. | YEAR | SHEET NO. |
|---|---|---|
| NH-115(54) | 2015 | |

REVISIONS

| NO. | DATE | BY | BRIEF DESCRIPTION |
|---|---|---|---|
| | | | |
| | | | |
| | | | |
| | | | |
| | | | |

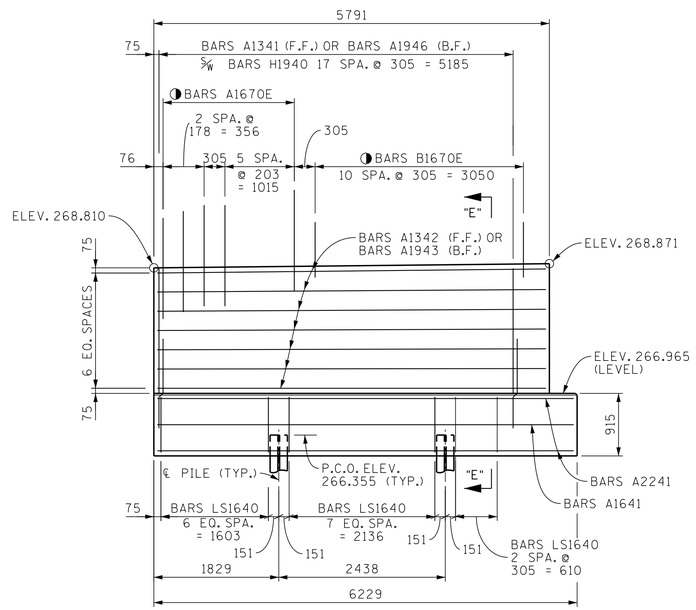


ELEVATION "A"-"A"

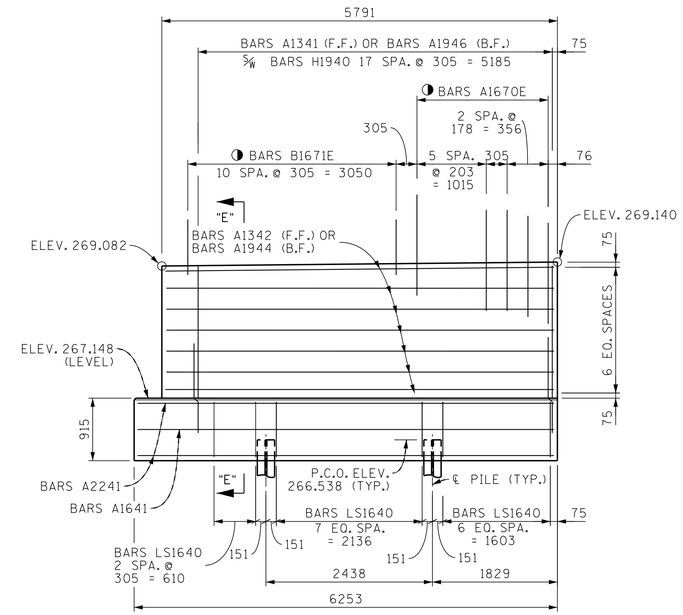


ELEVATION "B"-"B"

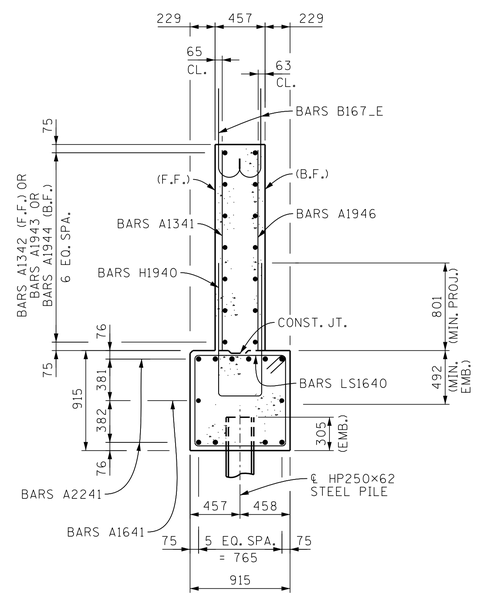


SECTION "E"-"E"

◑ DENOTES: BARS A1670E ARE DESIGNATED AS BARS A570E AND BARS B1670E AND BARS B1671E ARE DESIGNATED AS BARS B570E ON STD. DWG. NO. STD-11-1.

P.C.O. DENOTES: PILE CUT-OFF

B.F. DENOTES: BACK FACE

F.F. DENOTES: FRONT FACE

DIVISION OF STRUCTURES METRIC

NOTE: ALL DIMENSIONS SHOWN IN MILLIMETERS, WITH THE EXCEPTION OF STATIONS AND ELEVATIONS, UNLESS OTHERWISE NOTED.

CABRINA M. DIETERS — STATE OF TENNESSEE — LICENSED PROFESSIONAL ENGINEER — AGRICULTURE

STATE OF TENNESSEE
DEPARTMENT OF TRANSPORTATION

BRIDGE NO. 3
ABUTMENT NO. 2 DETAILS
COLLECTOR NO. 3
OVER
STATE ROUTE 115
STATION 112+065.302
KNOX COUNTY
2015

CORRECT Wayne J. Sieper
ENGINEER OF STRUCTURES

| | | | |
|---|---|---|---|
| DESIGNED BY | ABDISALAN DAHIR | DATE | 7-15 |
| DRAWN BY | JERRY W. SIMPSON | DATE | 7-15 |
| SUPERVISED BY | BIRDWELL/DIETERS | DATE | 7-15 |
| CHECKED BY | ABDISALAN DAHIR | DATE | 8-15 |

U-73-115

BP1138MF.DGN

CONST. NO. 47026-3279-14

| PROJECT NO. | YEAR | SHEET NO. |
|---|---|---|
| NH-115(54) | 2015 | |

REVISIONS

| NO. | DATE | BY | BRIEF DESCRIPTION |
|---|---|---|---|
| | | | |

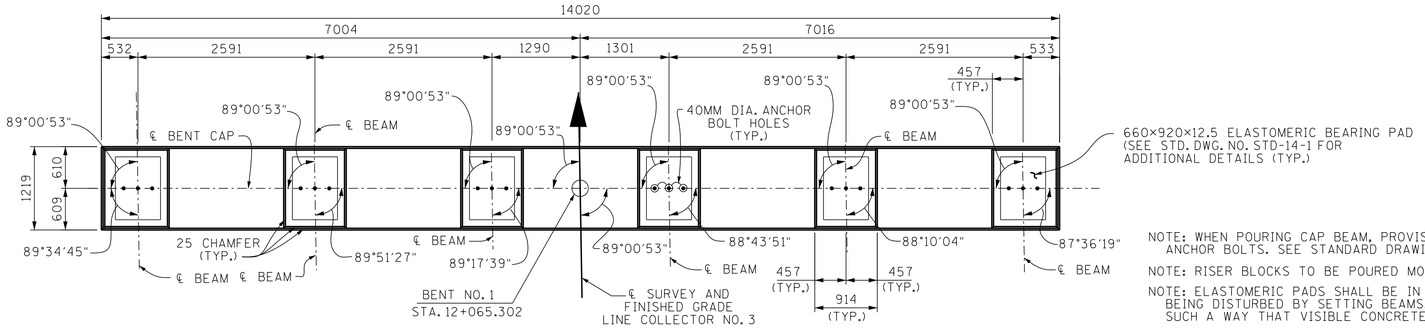


PLAN

NOTE: WHEN POURING CAP BEAM, PROVISIONS SHALL BE MADE FOR SETTING ANCHOR BOLTS. SEE STANDARD DRAWING STD-6-1. BOLT PROJECTION 279.

NOTE: RISER BLOCKS TO BE POURED MONOLITHICALLY WITH CAP BEAM.

NOTE: ELASTOMERIC PADS SHALL BE IN PLACE A MINIMUM OF ONE DAY BEFORE BEING DISTURBED BY SETTING BEAMS. PLACE RUBBER BONDING CEMENT IN SUCH A WAY THAT VISIBLE CONCRETE SURFACES WILL NOT BE STAINED.

COLUMN STEEL TO EXTEND 1219 INTO CAP BEAM.

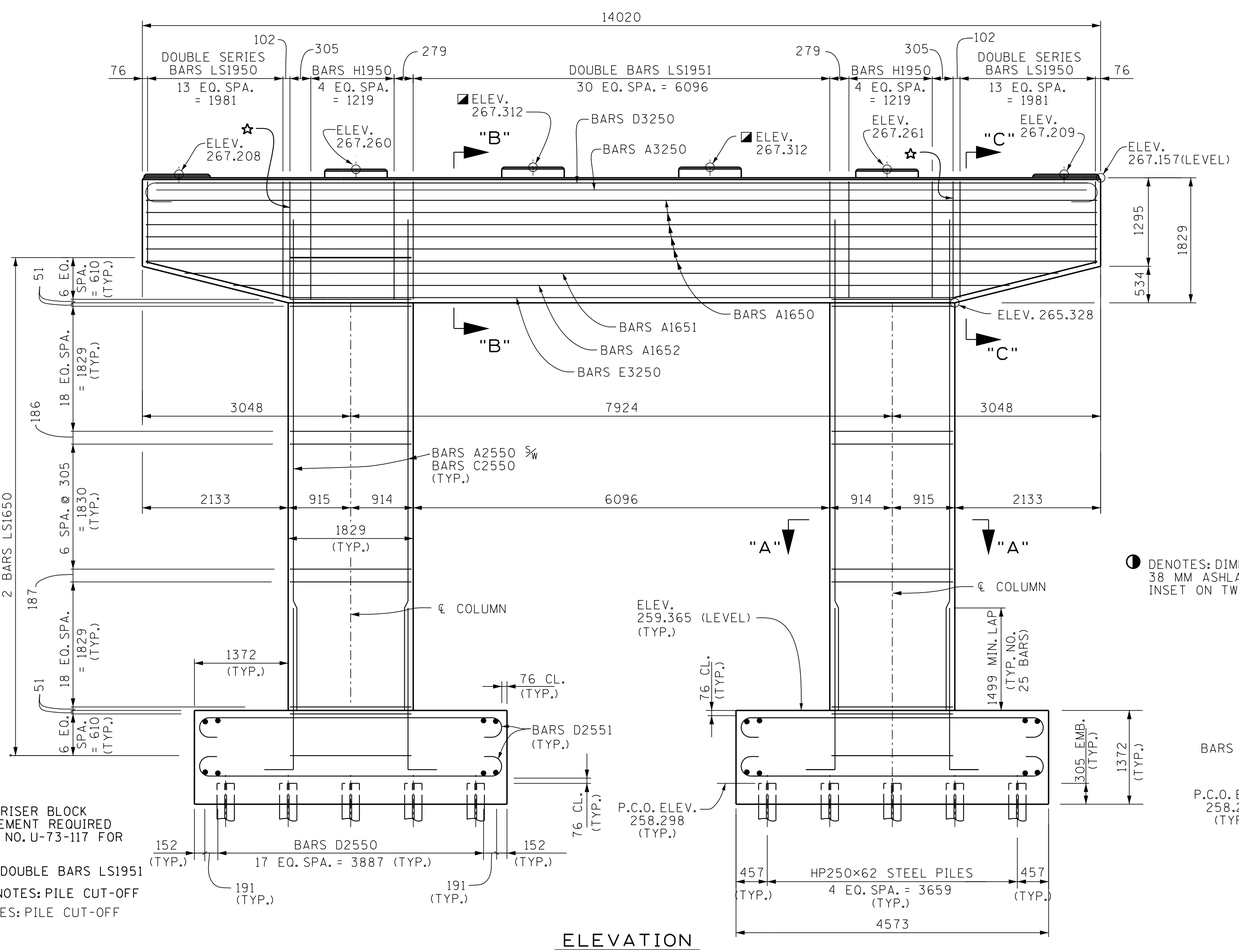


ELEVATION
(LOOKING FORWARD ON SURVEY)

◪ DENOTES: RISER BLOCK REINFORCEMENT REQUIRED (SEE DWG NO. U-73-117 FOR DETAILS)

☆ DENOTES: DOUBLE BARS LS1951

P.C.O. DENOTES: PILE CUT-OFF

P.C.O. DENOTES: PILE CUT-OFF

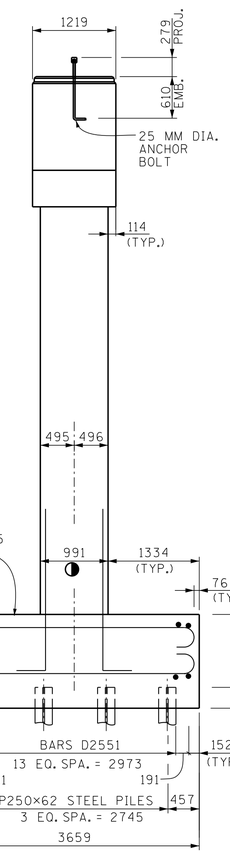


◑ DENOTES: DIMENSION INCLUDES 38 MM ASHLAR STONE FINISH INSET ON TWO SIDES

END ELEVATION

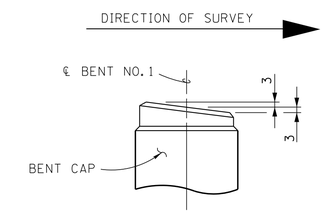


RISER BLOCK SLOPE DETAIL

RISER BLOCK BEARING PAD SURFACE TO CONFORM TO BOTTOM OF BEAM GRADE.

| ESTIMATED QUANTITIES | |
|---|---|
| CLASS "A" CONCRETE M3 | REINFORCING STEEL KG |
| 98 | 11852 |

NOTE: ALL DIMENSIONS SHOWN IN MILLIMETERS, WITH THE EXCEPTION OF STATIONS AND ELEVATIONS, UNLESS OTHERWISE NOTED.

STATE OF TENNESSEE
DEPARTMENT OF TRANSPORTATION

BRIDGE NO. 3
BENT NO. 1
COLLECTOR NO. 3
OVER
STATE ROUTE 115
STATION 112+065.302
KNOX COUNTY
2015

CORRECT _____ ENGINEER OF STRUCTURES

| | | | |
|---|---|---|---|
| DESIGNED BY | ABDISALAN DAHIR | DATE | 7-15 |
| DRAWN BY | JERRY W. SIMPSON | DATE | 7-15 |
| SUPERVISED BY | FIELDS / DIETERS | DATE | 7-15 |
| CHECKED BY | ABDISALAN DAHIR | DATE | 8-15 |

M-73-116

BP1138MF.DGN

CONST. NO. 47026-3279-14

| PROJECT NO. | YEAR | SHEET NO. |
|---|---|---|
| NH-115(54) | 2015 | |

REVISIONS

| NO. | DATE | BY | BRIEF DESCRIPTION |
|---|---|---|---|
| | | | |

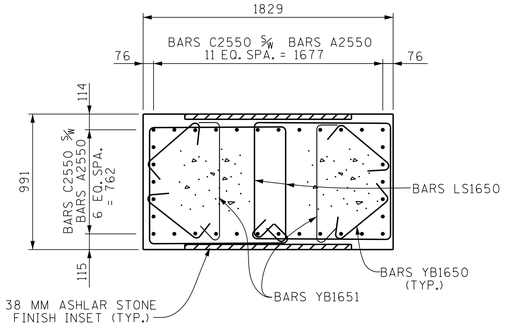


SECTION "A"-"A"

BARS YB1651, BARS YB1650 (TYP.)

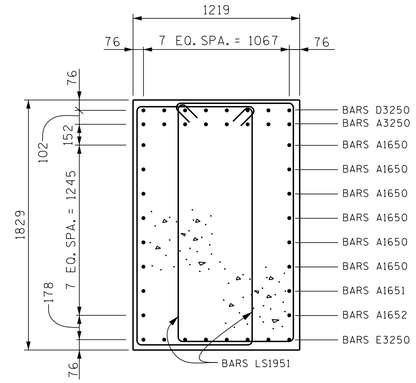


SECTION "B"-"B"

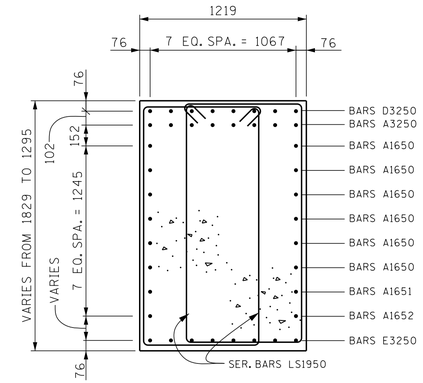


SECTION "C"-"C"

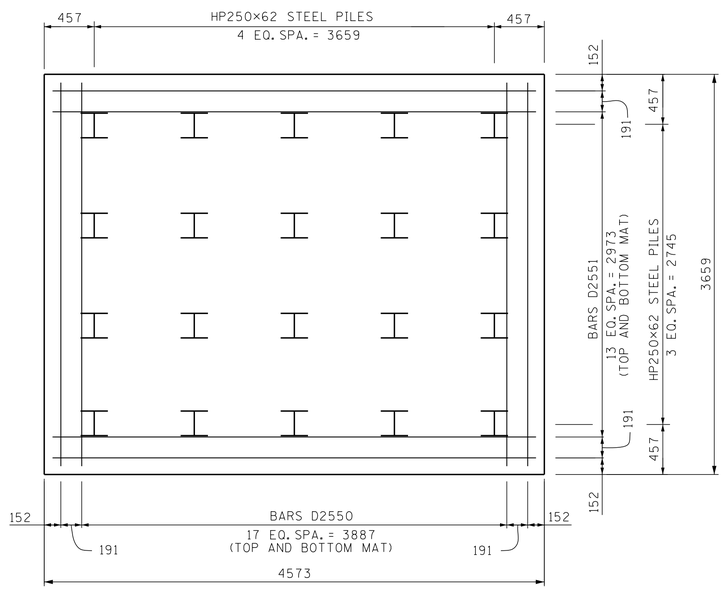


PLAN OF FOOTING

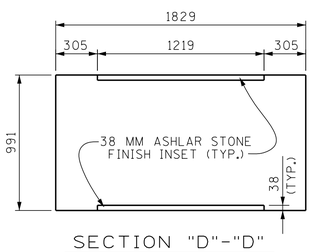


SECTION "D"-"D"

(SHOWING ASHLAR STONE)

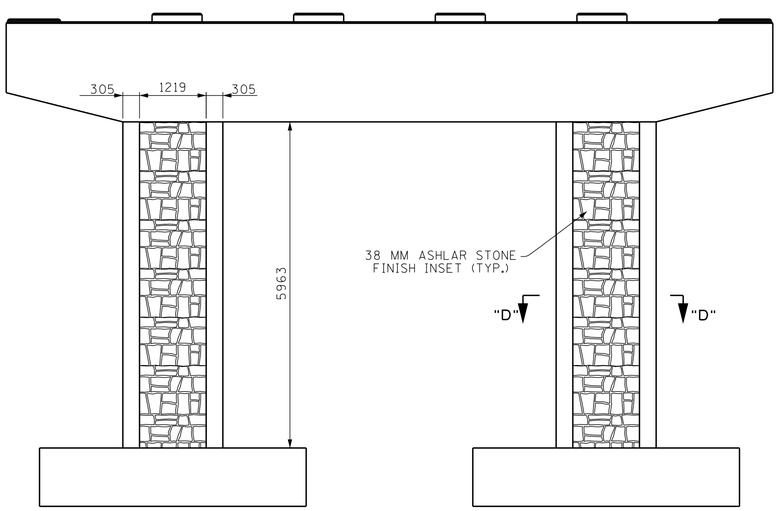


ASHLAR STONE ELEVATION

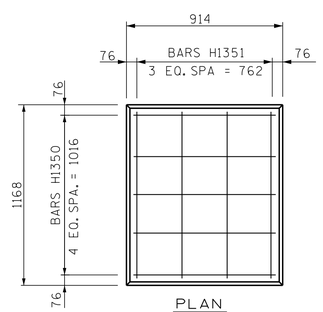


PLAN

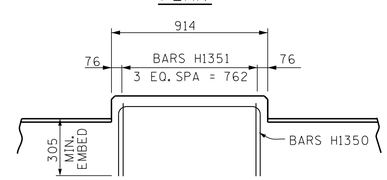


ELEVATION

RISER BLOCK REINFORCEMENT DETAILS

NOTE: ALL DIMENSIONS SHOWN IN MILLIMETERS, WITH THE EXCEPTION OF STATIONS AND ELEVATIONS, UNLESS OTHERWISE NOTED.

DIVISION OF METRIC STRUCTURES

CABRINA M. DIETERS
AGRICULTURE
STATE OF TENNESSEE

STATE OF TENNESSEE
DEPARTMENT OF TRANSPORTATION

BRIDGE NO. 3
BENT NO. 1 DETAILS
COLLECTOR NO. 3
OVER
STATE ROUTE 115
STATION 112+065.302
KNOX COUNTY
2015

CORRECT Wayne J. Seger
ENGINEER OF STRUCTURES

DESIGNED BY ABDISALAN DAHIR DATE 7-15
DRAWN BY JERRY W. SIMPSON DATE 7-15
SUPERVISED BY FIELDS / DIETERS DATE 7-15
CHECKED BY ABDISALAN DAHIR DATE 8-15

M-73-117

STANDARDSTAREMBLEM1138.DGN

CONST. NO. 47026-3279-14

| PROJECT NO. | YEAR | SHEET NO. |
|---|---|---|
| NH-115(54) | 2015 | |

REVISIONS

| NO. | DATE | BY | BRIEF DESCRIPTION |
|---|---|---|---|
| | | | |

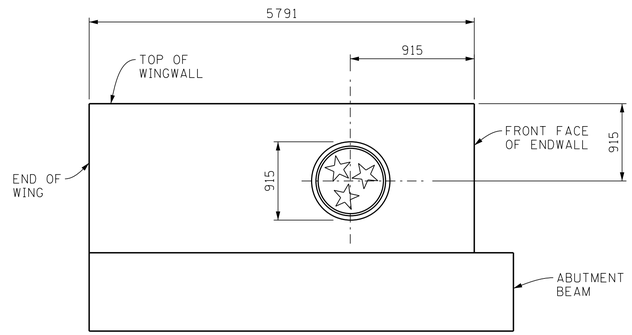


ABUTMENT TREATMENT

(WINGWALL ELEVATION)

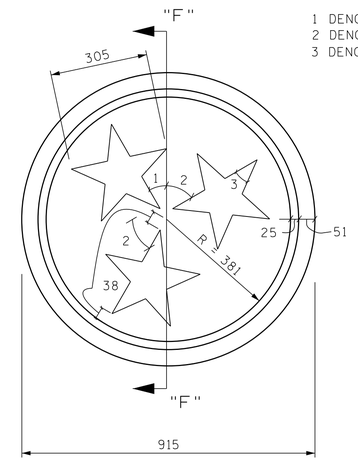


ARCHITECTURAL TREATMENT
3 STAR SYMBOL FORM DETAIL

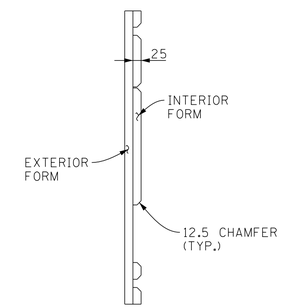


SECTION "F"-"F"

NOTES:

STATE SYMBOL TO BE "EMBOSSED" INTO THE CONCRETE.

STATE SYMBOL IS TO BE PAINTED.

PAINTING STATE SEAL:

THE STATE SEAL SHALL BE PAINTED WITH THE FOLLOWING PAINTS OR APPROVED EQUAL. IF THE CONTRACTOR ELECTS USE OF AN APPROVED EQUAL PAINT FROM A DIFFERENT COMPANY, IT SHALL BE A MARINE ACRYLIC GLASS PAINT WITH A SIMILAR COLOR AND PAINT PROPERTIES. A COLOR SAMPLE SHALL BE SUBMITTED TO THE ENGINEER FOR APPROVAL. THE COST OF THE PREPARATION OF SURFACES, PAINT, SEALER, SEALING THE PAINTED SURFACES, AND ALL LABOR REQUIRED FOR PAINTING THE STATE SEAL SHALL BE INCLUDED IN ITEMS BID ON.

| | |
|---|---|
| RED | SHERWIN WILLIAMS SHER-CRYL HPA HIGH PERFORMANCE ACRYLIC GLOSS "SAFETY RED"<br>B66 R300<br>6403-31922 |
| WHITE | SHERWIN WILLIAMS SHER-CRYL HPA HIGH PERFORMANCE ACRYLIC GLOSS "FLAG WHITE"<br>B66 T304<br>6401-74215 |
| BLUE | SHERWIN WILLIAMS SHER-CRYL HPA HIGH PERFORMANCE ACRYLIC GLOSS "FLAG BLUE"<br>B66 T304<br>6401-74215 |
| CLEAR COAT | WATERBORNE ACRYLIC CLEAR COAT CLEAR GLOSS<br>B66 C 375<br>6403-60111 |

N.S. DENOTES: NEAR SIDE
F.S. DENOTES: FAR SIDE

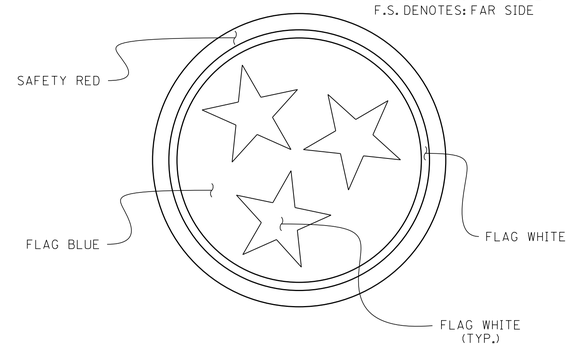


PAINTING DETAIL
LOCATION OF COLORS

NOTE: ALL DIMENSIONS SHOWN IN MILLIMETERS, WITH THE EXCEPTION OF STATIONS AND ELEVATIONS, UNLESS OTHERWISE NOTED.

STATE OF TENNESSEE
DEPARTMENT OF TRANSPORTATION

BRIDGE NO. 3
DECORATIVE SURFACE FINISH
AT ABUTMENTS
COLLECTOR NO. 3
OVER
STATE ROUTE 115
STATION 112+065.302
KNOX COUNTY
2015

DESIGNED BY ABDISALAN DAHIR DATE 7-15
DRAWN BY KEVIN MARTINKO DATE 7-15
SUPERVISED BY BIRDWELL/DIETERS DATE 7-15
CHECKED BY ABDISALAN DAHIR DATE 8-15

CORRECT Wayne G. Sieger
ENGINEER OF STRUCTURES

U-73-118

FFD1138.DGN

| CONST. NO. 47026-3279-14 | | |
|---|---|---|
| PROJECT NO. | YEAR | SHEET NO. |
| NH-115(54) | 2015 | |

REVISIONS

| NO. | DATE | BY | BRIEF DESCRIPTION |
|---|---|---|---|
| | | | |

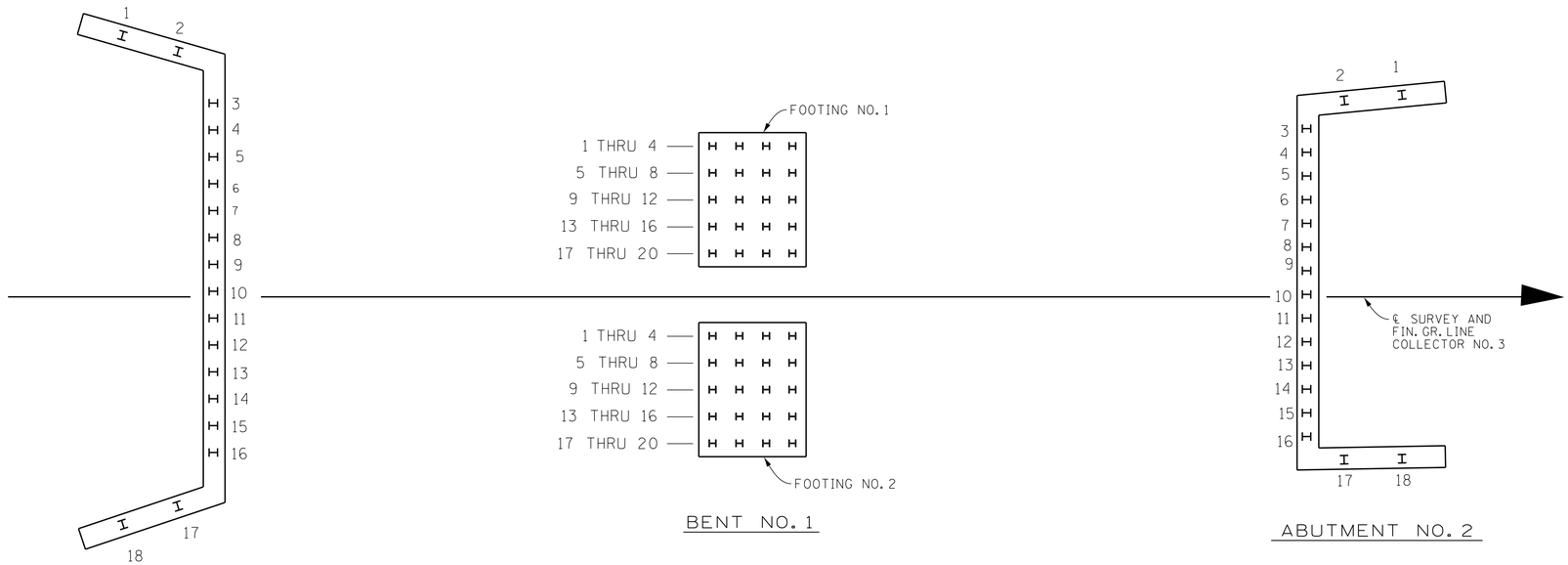


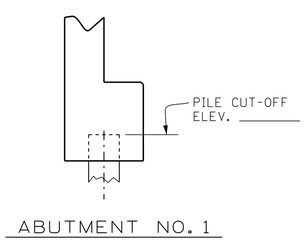


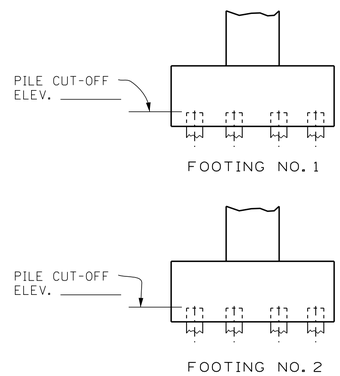


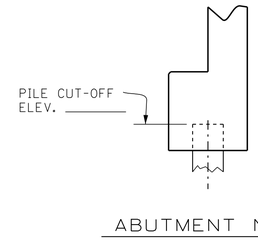


TABLE SHOWING PILE NUMBERS, PILE CUT-OFF ELEVATIONS, AND PILE LENGTHS

| | | 1 | 2 | 3 | 4 | 5 | 6 | 7 | 8 | 9 | 10 | 11 | 12 | 13 | 14 | 15 | 16 | 17 | 18 | 19 | 20 |
|---|---|---|---|---|---|---|---|---|---|---|---|---|---|---|---|---|---|---|---|---|---|
| ABUTMENT NO. 1 | PILE CUT-OFF ELEV. | | | | | | | | | | | | | | | | | | | | |
| | PILE TIP ELEV. | | | | | | | | | | | | | | | | | | | | |
| | IN PLACE PILE LENGTH | | | | | | | | | | | | | | | | | | | | |
| BENT FOOTING NO. 1 | PILE CUT-OFF ELEV. | | | | | | | | | | | | | | | | | | | | |
| | PILE TIP ELEV. | | | | | | | | | | | | | | | | | | | | |
| | IN PLACE PILE LENGTH | | | | | | | | | | | | | | | | | | | | |
| BENT FOOTING NO. 2 | PILE CUT-OFF ELEV. | | | | | | | | | | | | | | | | | | | | |
| | PILE TIP ELEV. | | | | | | | | | | | | | | | | | | | | |
| | IN PLACE PILE LENGTH | | | | | | | | | | | | | | | | | | | | |
| ABUTMENT NO. 2 | PILE CUT-OFF ELEV. | | | | | | | | | | | | | | | | | | | | |
| | PILE TIP ELEV. | | | | | | | | | | | | | | | | | | | | |
| | IN PLACE PILE LENGTH | | | | | | | | | | | | | | | | | | | | |

NOTE: ALL DIMENSIONS SHOWN IN MILLIMETERS, WITH THE EXCEPTION OF STATIONS AND ELEVATIONS, UNLESS OTHERWISE NOTED.

STATE OF TENNESSEE
**DEPARTMENT OF TRANSPORTATION**

BRIDGE NO. 3
FINAL FOUNDATION DATA
COLLECTOR NO. 3
OVER
STATE ROUTE 115
STATION 112+065.302
KNOX COUNTY
2015

DIVISION OF STRUCTURES METRIC

DESIGNED BY ABDISALAN DAHIR DATE 7-15
DRAWN BY JERRY W. SIMPSON DATE 7-15
SUPERVISED BY BIRDWELL/DIETERS DATE 7-15
CHECKED BY ABDISALAN DAHIR DATE 8-15

CORRECT Wayne J. Sieger
ENGINEER OF STRUCTURES

U-73-119

BOS1138.DGN

# BILL OF STEEL

## SUPERSTRUCTURE (EPOXY-COATED)

| BAR | LOCATION | SIZE | NO. REQ'D | BENDING DIMENSIONS A | B | C | D | LENGTH |
|---|---|---|---|---|---|---|---|---|
| A1300E | SIDEWALK | 13 | 6 | | | | | 7213 |
| A1301E | SIDEWALK | 13 | 48 | | | | | 9144 |
| A1302E | SIDEWALK | 13 | 6 | | | | | 1747 |
| A1303E | SIDEWALK | 13 | 278 | | | | | 1673 |
| A1304E | SIDEWALK | 13 | 6 | | | | | 7642 |
| A1600E | SLAB | 16 | 746 | | | | | 15218 |
| A1601E | SLAB | 16 | 170 | | | | | 12192 |
| A1602E | SLAB | 16 | 546 | | | | | 9144 |
| A1603E | SLAB | 16 | 1 | | | | | 8357 |
| A1604E | SLAB | 16 | 1 | | | | | 8179 |
| A1605E | SLAB | 16 | 1 | | | | | 6172 |
| A1606E | SLAB | 16 | 1 | | | | | 5766 |
| A1607E | SLAB | 16 | 2 | | | | | 5588 |
| A1608E | SLAB | 16 | 2 | | | | | 5359 |
| A1609E | SLAB | 16 | 2 | | | | | 4724 |
| A1610E | SLAB | 16 | 2 | | | | | 4700 |
| A1611E | SLAB | 16 | 2 | | | | | 4578 |
| A1612E | SLAB | 16 | 1 | | | | | 4318 |
| A1613E | SLAB | 16 | 1 | | | | | 4115 |
| A1614E | SLAB | 16 | 64 | | | | | 3988 |
| A1615E | SLAB | 16 | 1 | | | | | 3733 |
| A1616E | SLAB | 16 | 1 | | | | | 3048 |
| A1617E | SLAB | 16 | 1 | | | | | 2718 |
| A2200E | SLAB | 22 | 104 | | | | | 18288 |
| SERIES | SLAB | 25 | 4 | LENGTH VARIES FROM 3308 TO 5030 IN INC. OF 20.5MM (85 BARS) | | | | 354365 |
| A2500E | | | | | | | | |
| A3200E | SLAB | 32 | 100 | | | | | 18288 |
| A3201E | SLAB | 32 | 52 | | | | | 17221 |
| A3202E | SLAB | 32 | 52 | | | | | 6947 |
| A3203E | SLAB | 32 | 48 | | | | | 5004 |
| B1671E | RAIL | 16 | 460 | 812 | | | | 987 |
| B1672E | RAIL | 16 | 460 | 1036 | | | | 1211 |

## SUPERSTRUCTURE (REGULAR)

| BAR | LOCATION | SIZE | NO. REQ'D | BENDING DIMENSIONS A | B | C | D | LENGTH |
|---|---|---|---|---|---|---|---|---|
| A1618 | DIAPHRAGM | 16 | 12 | | | | | 13513 |
| LS1300 | DIAPHRAGM | 13 | 25 | 350 | 1540 | | | 4010 |
| LS1301 | DIAPHRAGM | 13 | 12 | 355 | 355 | | | 1648 |

## ABUTMENT NO. 1 (EPOXY-COATED)

| BAR | LOCATION | SIZE | NO. REQ'D | BENDING DIMENSIONS A | B | C | D | LENGTH |
|---|---|---|---|---|---|---|---|---|
| A1670E | WINGWALL/RAIL | 16 | 36 | | | | | 1480 |
| A1940E | ENDWALL | 19 | 2 | | | | | 9144 |
| A1941E | ENDWALL | 19 | 2 | | | | | 10624 |
| A1942E | ENDWALL | 19 | 124 | | | | | 1834 |
| B1670E | WINGWALL/RAIL | 16 | 22 | 812 | | | | 987 |
| B1671E | WINGWALL/RAIL | 16 | 22 | 1036 | | | | 1211 |
| B1940E | ENDWALL | 19 | 2 | 1524 | | | | 1727 |
| F1940E | ENDWALL/PABE | 19 | 58 | 330 | 381 | 330 | 381 | 1194 |
| R1940E | ENDWALL | 19 | 58 | 991 | 889 | | | 1880 |

## ABUTMENT NO. 1 (REGULAR)

| BAR | LOCATION | SIZE | NO. REQ'D | BENDING DIMENSIONS A | B | C | D | LENGTH |
|---|---|---|---|---|---|---|---|---|
| A1340 | ROADWAY BRACKET | 13 | 1 | | | | | 9144 |
| A1341 | ROADWAY BRACKET | 13 | 1 | | | | | 9531 |
| A1342 | WINGWALL | 13 | 36 | | | | | 1830 |
| A1343 | WINGWALL | 13 | 14 | | | | | 5717 |
| A1640 | ABUTMENT BEAM | 16 | 2 | | | | | 9144 |
| A1641 | ABUTMENT BEAM | 16 | 2 | | | | | 10926 |
| A1642 | WING BEAM | 16 | 4 | | | | | 6122 |
| A1943 | ENDWALL | 19 | 14 | | | | | 9144 |
| A1944 | ENDWALL | 19 | 14 | | | | | 10624 |
| A1945 | ENDWALL/ABUT. BEAM | 19 | 8 | | | | | 1258 |
| A1946 | WINGWALL | 19 | 36 | | | | | 1830 |
| A1947 | WINGWALL | 19 | 14 | | | | | 5798 |
| A2240 | ABUTMENT BEAM | 22 | 10 | | | | | 9144 |
| A2241 | ABUTMENT BEAM | 22 | 10 | | | | | 11409 |
| A2242 | WING BEAM | 22 | 20 | | | | | 6122 |
| B1941 | ENDWALL | 19 | 14 | 1524 | | | | 1727 |
| H1340 | RISER BLOCK | 13 | 8 | 330 | 423 | | | 1176 |
| H1341 | RISER BLOCK | 13 | 4 | 748 | 423 | | | 1594 |
| H1640 | ENDWALL/RDWY BRACKET | 16 | 58 | 660 | 152 | | | 964 |
| H1940 | A. BM.\EW\W. BM.\WW | 19 | 94 | 355 | 1293 | | | 2941 |
| LS1640 | A. BM.\W. BM. | 16 | 102 | 813 | 813 | | | 3532 |

## ABUTMENT NO. 2 (EPOXY-COATED)

| BAR | LOCATION | SIZE | NO. REQ'D | BENDING DIMENSIONS A | B | C | D | LENGTH |
|---|---|---|---|---|---|---|---|---|
| A1670E | WINGWALL/RAIL | 16 | 36 | | | | | 1480 |
| A1940E | ENDWALL | 19 | 2 | | | | | 15243 |
| A1941E | ENDWALL | 19 | 102 | | | | | 1845 |
| B1670E | WINGWALL/RAIL | 16 | 22 | 812 | | | | 987 |
| B1671E | WINGWALL/RAIL | 16 | 22 | 1036 | | | | 1211 |
| B1940E | ENDWALL | 19 | 2 | 1524 | | | | 1727 |
| F1940E | ENDWALL/PABE | 19 | 47 | 330 | 381 | 330 | 381 | 1194 |
| R1940E | ENDWALL | 19 | 47 | 991 | 889 | | | 1880 |

## ABUTMENT NO. 2 (REGULAR)

| BAR | LOCATION | SIZE | NO. REQ'D | BENDING DIMENSIONS A | B | C | D | LENGTH |
|---|---|---|---|---|---|---|---|---|
| A1340 | ROADWAY BRACKET | 13 | 1 | | | | | 14371 |
| A1341 | WINGWALL | 13 | 36 | | | | | 1791 |
| A1342 | WINGWALL | 13 | 14 | | | | | 5697 |
| A1640 | ABUTMENT BEAM | 16 | 2 | | | | | 15644 |
| A1641 | WING BEAM | 16 | 4 | | | | | 6136 |
| A1942 | ENDWALL | 19 | 12 | | | | | 15243 |
| A1943 | WINGWALL | 19 | 7 | | | | | 5729 |
| A1944 | WINGWALL | 19 | 7 | | | | | 5684 |
| A1945 | ENDWALL/ABUT. BEAM | 19 | 8 | | | | | 1258 |
| A1946 | WINGWALL | 19 | 36 | | | | | 1791 |
| A2240 | ABUTMENT BEAM | 22 | 10 | | | | | 15644 |
| A2241 | WING BEAM | 22 | 20 | | | | | 6136 |
| B1941 | ENDWALL | 19 | 12 | 1524 | | | | 1727 |
| H1640 | ENDWALL/RDWY BRACKET | 16 | 47 | 660 | 152 | | | 964 |
| H1940 | A. BM.\EW\W. BM.\WW | 19 | 83 | 355 | 1293 | | | 2941 |
| LS1640 | A. BM.\W. BM. | 16 | 98 | 813 | 813 | | | 3532 |

## BENT NO. 1

| BAR | LOCATION | SIZE | NO. REQ'D | BENDING DIMENSIONS A | B | C | D | LENGTH |
|---|---|---|---|---|---|---|---|---|
| A1650 | CAP BEAM | 16 | 12 | | | | | 13920 |
| A1651 | CAP BEAM | 16 | 2 | | | | | 12793 |
| A1652 | CAP BEAM | 16 | 2 | | | | | 11371 |
| A2550 | COLUMN/CAP BEAM | 25 | 68 | | | | | 7182 |
| A3250 | CAP BEAM | 32 | 8 | | | | | 13614 |
| C2550 | FOOTING/COLUMN | 25 | 68 | 2439 | | | | 2864 |
| D2550 | FOOTING | 25 | 80 | 3507 | | | | 4057 |
| D2551 | FOOTING | 25 | 64 | 4421 | | | | 4971 |
| D3250 | CAP BEAM | 32 | 8 | 13918 | | | | 14768 |
| E3250 | CAP BEAM | 32 | 8 | 9735 | 2147 | 521 | 2083 | 14029 |
| H1350 | RISER BLOCK | 13 | 10 | 814 | 410 | | | 1634 |
| H1351 | RISER BLOCK | 13 | 8 | 1066 | 410 | | | 1886 |
| H1950 | CAP BEAM | 19 | 10 | 1119 | 1729 | | | 4577 |
| LS1650 | CAP/COL./FOOTING | 16 | 236 | 972 | 891 | | | 4006 |
| SERIES | CAP BEAM | 19 | 4 | 832 | * | | | 69916 |
| LS1950 | | | | DIM. "B" VARIES FROM 1212 TO 1708 IN INC. OF 38MM (14 BARS) | | | | |
| LS1951 | CAP BEAM | 19 | 66 | 832 | 1729 | | | 5532 |
| YB1650 | CAP\COL.\FOOTING | 16 | 472 | 454 | 203 | | | 797 |
| YB1641 | CAP\COL.\FOOTING | 16 | 236 | 891 | 203 | | | 1234 |

CONST. NO. 47026-3279-14

| PROJECT NO. | YEAR | SHEET NO. |
|---|---|---|
| NH-115(54) | 2015 | |

REVISIONS

| NO. | DATE | BY | BRIEF DESCRIPTION |
|---|---|---|---|
| | | | |
| | | | |
| | | | |
| | | | |
| | | | |

NOTE: BAR NUMBERS ARE REPEATED ON BILL OF STEEL FOR EACH SUBSTRUCTURE. THE SUPPLIER SHALL SHIP THE BARS TO THE JOB SITE WITH THE SUBSTRUCTURE DESIGNATION INCLUDED AS PART OF THE LABEL.

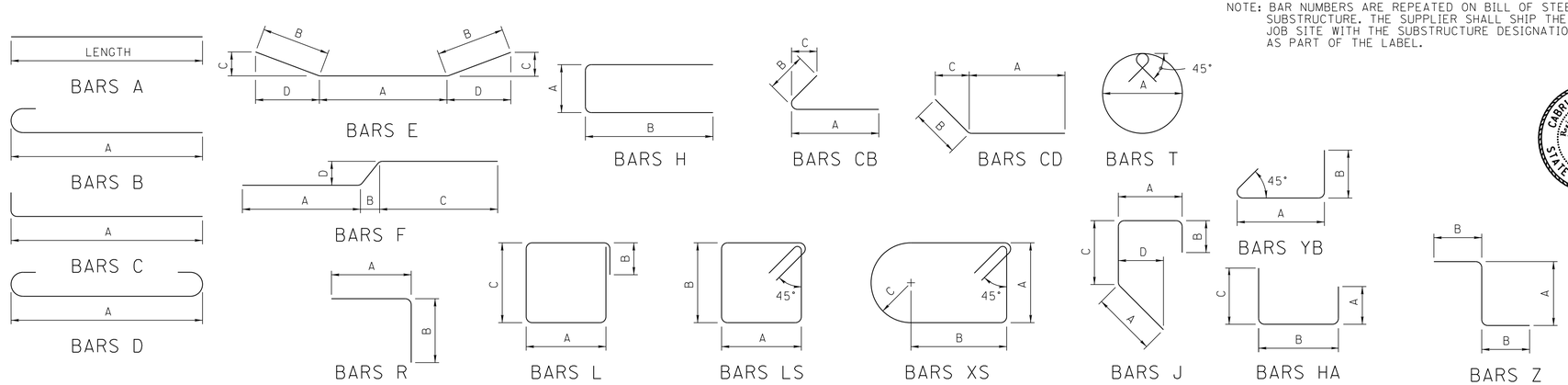


## REINFORCING STEEL CODE

| TYPE | SIZE | SERIES |
|---|---|---|
| A | 16 | 06 |

NOTE: DIMENSIONS SHOWN ON THIS SHEET ARE OUTSIDE TO OUTSIDE OF BAR. STANDARD C.R.S.I. HOOK DETAILS SHALL APPLY, EXCEPT AS NOTED.

NOTE: THE SUFFIX E FOR BARS SO MARKED DENOTES EPOXY COATED REINFORCEMENT.

CABRINA M. DIETERS — STATE OF TENNESSEE — AGRICULTURE

DIVISION OF STRUCTURES — METRIC

NOTE: ALL DIMENSIONS SHOWN IN MILLIMETERS, WITH THE EXCEPTION OF STATIONS AND ELEVATIONS, UNLESS OTHERWISE NOTED.

STATE OF TENNESSEE
DEPARTMENT OF TRANSPORTATION
BRIDGE NO. 3
BILL OF STEEL
COLLECTOR NO. 3
OVER
STATE ROUTE 115
STATION 112+065.302
KNOX COUNTY
2015

DESIGNED BY ABDISALAN DAHIR DATE 7-15
DRAWN BY KEVIN MARTINKO DATE 7-15
SUPERVISED BY BIRDWELL/DIETERS DATE 7-15
CHECKED BY ABDISALAN DAHIR DATE 8-15

CORRECT Wayne G. Sieger
ENGINEER OF STRUCTURES

U-73-120

| TYPE | YEAR | PROJECT NO. | SHEET NO |
|---|---|---|---|
| CONST. | 2016 | NH-115(54) | |
| | | | |
| | | | |
| | | | |

CONST. NO. 47026-3279-14

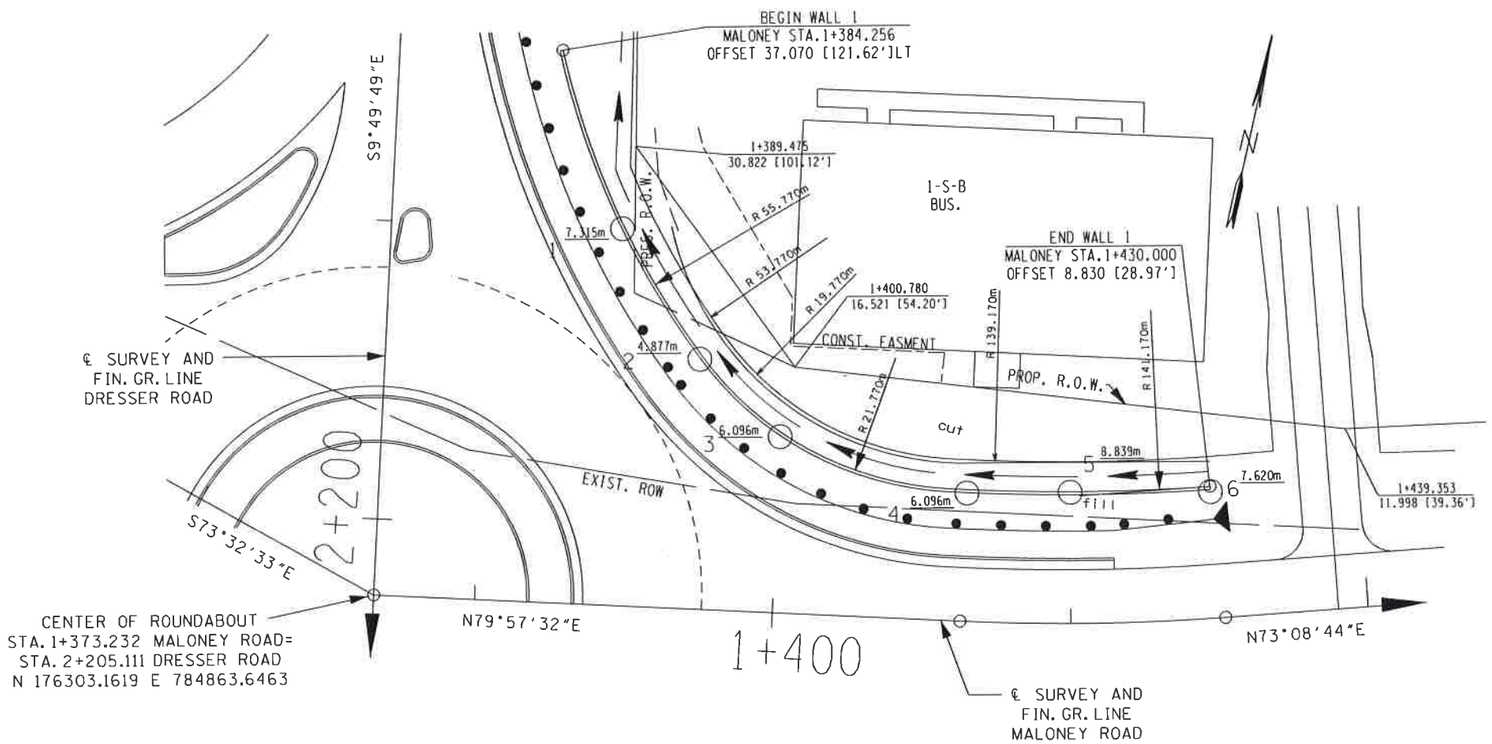


PROPOSED RETAINING WALL NO. 1
PLAN VIEW
(SCALE: 1:200)

MALONEY ROAD

| | |
|---|---|
| PI | 1+421.495 |
| N | 176311.5766 |
| E | 784911.1699 |
| Δ | 6°48'48"(LT) |
| R | 150.000 |
| L | 17.838 |
| T | 8.929 |
| E | 0.265 |
| L.C. | 17.827 |
| SE | N.C. |
| DESIGN SPEED | 60km/h |
| TRANS. LENGTH | NA |

NOTE: THE RETAINING WALL PAY QUANTITY IS BASED ON THE SURFACE AREA BETWEEN THE APPROXIMATE TOP OF WALL AND THE BOTTOM OF THE WALL OR TOP OF WALL FOOTING. THE ESTIMATED QUANTITY FOR THE CONCEPTUAL DRAWING: 153 m2

NOTE: IF A CONCRETE CANTILEVER WALL IS USED, ALL REINFORCING STEEL PROJECTING FROM FOOTING INTO THE WALL IN BACK FACE (FILL SIDE) SHALL BE EPOXY COATED.

NOTE: ASHLAR STONE FINISH TO BE USED ON FRONT FACE OF RETAINING WALL. TEXTURE FINISH ALL EXPOSED WALL SURFACES TO 1'-0" BELOW FINAL GROUND LINES. (MOUNTAIN GREY, FED. SPEC. NO. 36440). COST OF ASHLAR STONE AND TEXTURE FINISHES TO BE INCLUDED IN THE UNIT PRICE BID FOR ITEM NO. 604M07.01.

*DENOTES: STATIONED ALONG FRONT FACE OF RETAINING WALL

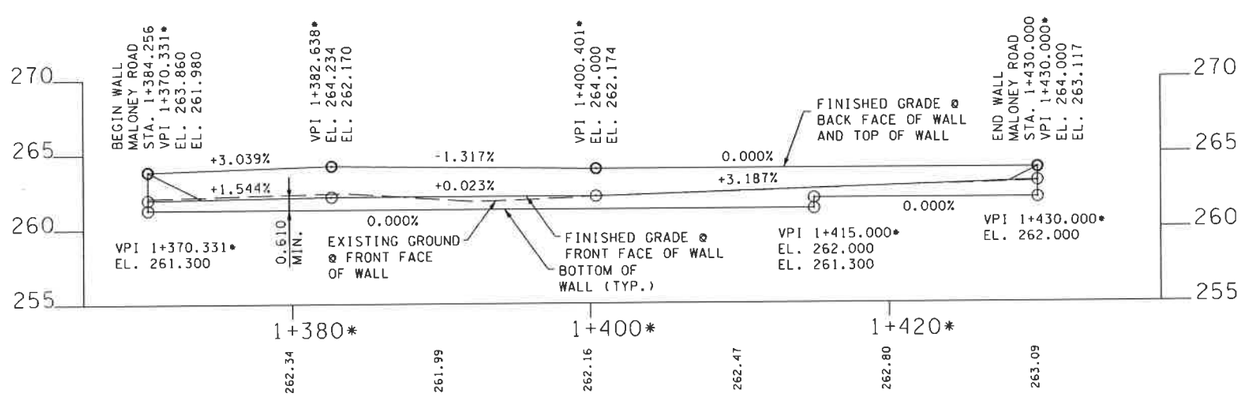


PROPOSED RETAINING WALL NO. 1
ELEVATION VIEW
(SCALE: 1:200)

| ESTIMATED QUANTITIES |
|---|
| 604M07.01 |
| RETAINING WALL (WALL NO.1) m2 |
| 153 |

METRIC

COORDINATES ARE NAD/83(1995), ARE DATUM ADJUSTED BY THE FACTOR OF 1.000 AND TIED TO THE TGRN. ALL ELEVATIONS ARE REFERENCED TO THE NAVD 1988.

STATE OF TENNESSEE
DEPARTMENT OF TRANSPORTATION

CONCEPTUAL DRAWING
RETAINING WALL NO. 1
MALONEY ROAD
FROM STA. 1+384.256
TO STA. 1+430.000
KNOX COUNTY
2016

U-XXX-XXX

10/1/2015 9:09:39 AM
C:\Users\u00296\Documents\WORK\Recent Work\KnoxSR115\Walls\KnoxSR115Ret Walls00241-04.dgn

| TYPE | YEAR | PROJECT NO. | SHEET NO |
|---|---|---|---|
| CONST. | 2016 | NH-115(54) | |

CONST. NO. 47026-3279-14

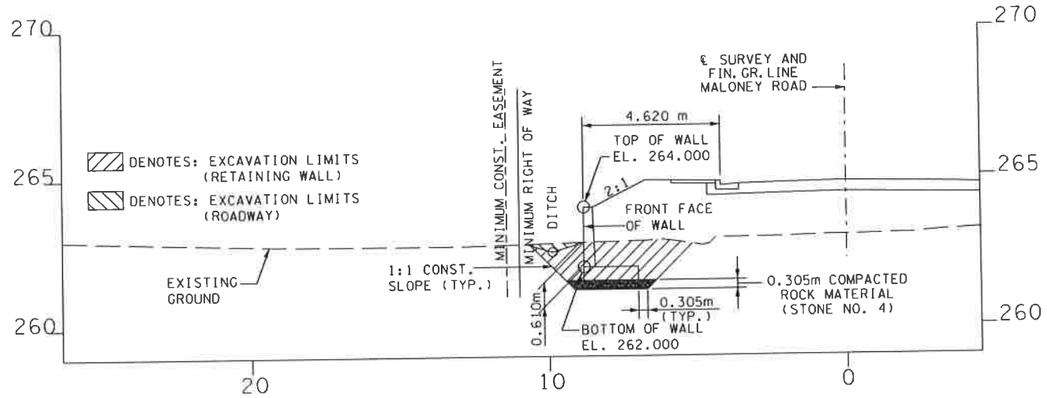


PROPOSED RETAINING WALL 1
TYPICAL SECTION
STA. 1+420.000 (SCALE: 1:100)

| BORING NO. | STATION | OFFSET | GROUND ELEVATION | ROCK ELEVATION | TOTAL DEPTH |
|---|---|---|---|---|---|
| 1 | 1+388.809 | LT 25.262m | 262.28m | 254.97m | 7.315m |
| 2 | 1+394.381 | LT 16.746m | 262.32m | 257.45m | 4.877m |
| 3 | 1+400.00 | LT 11.809m | 262.74m | 256.64m | 6.096m |
| 4 | 1+412.667 | LT 8.594m | 263.01m | 256.92m | 6.096m |
| 5 | 1+420.00 | LT 8.784m | 263.15m | 254.31m | 8.839m |
| 6 | 1+430.00 | LT 8.500m | 263.44m | 255.82m | 7.62m |

NOTE:
BORING DEPICTIONS SHOWN ON FOUNDATION DATA SHEET INDICATE GENERAL SOIL AND ROCK TYPES AT THE SPECIFIC BORING LOCATIONS.

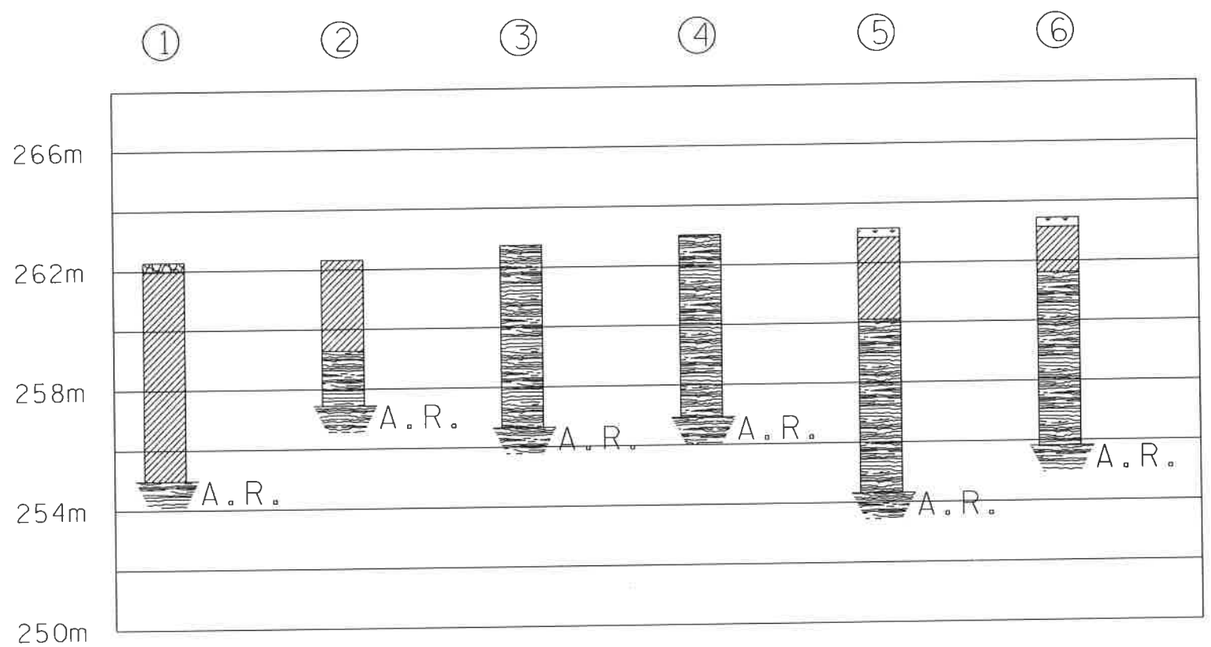


TABLE 3-FOUNDATION PARAMENTS AND REQUIREMENTS FOR OTHER GRAVITY OR SEMI-GRAVITY WALLS

| STATION LIMITS | FOUNDATION BEARING CONDITION REQUIREMENT | NOMINAL BEARING RESISTANCE (KPa) | COEFFICIENT OF SLIDING FRICTION |
|---|---|---|---|
| 1+384.256 TO 1+430.000 | 0.305 METERS OF NUMBER 4 STONE | 240 kPa (5000 psf) | 0.60 |

## RETAINING WALL DESIGN NOTES

SEE GEOTECHNICAL DESIGN NOTES AND REQUIREMENTS SHEET.

## ACCEPTABLE WALL TYPES

THE RETAINING WALL SHALL BE ONE OF THE WALL TYPES LISTED BELOW.

CAST-IN-PLACE CONCRETE GRAVITY WALL
CAST-IN-PLACE CONCRETE CANTILEVER WALL
PRECAST GRAVITY WALL

## LEGEND

- ASPHALT & BASE
- TOPSOIL
- SHALE (TYPE C MATERIAL)
- CLAY (TYPE A MATERIAL)

TYPE MATERIAL-SEE DEFINITION OF TERMS USED FOR EARTHWORK GRADING CALCULATIONS SHEET.
A.R.= AUGER REFUSAL

METRIC

COORDINATES ARE NAD/83(1995), ARE DATUM ADJUSTED BY THE FACTOR OF 1.000 AND TIED TO THE TGRN. ALL ELEVATIONS ARE REFERENCED TO THE NAVD 1988.

STATE OF TENNESSEE
DEPARTMENT OF TRANSPORTATIO

CONCEPTUAL DRAWING
RETAINING WALL NO. 1
MALONEY ROAD
FROM STA. 1+384.256
TO STA. 1+430.000
KNOX COUNTY
2016

U-XXX-XXX

10/1/2015 9:0:26 AM
C:\Users\JJ00296\Documents\WORK\RecentWork\KnoxSR15\Walls\KnoxSR15Rt+Walls\00241-04.dgn

| TYPE | YEAR | PROJECT NO. | SHEET NO. |
|---|---|---|---|
| CONST. | 2016 | NH-115(54) | |
| | | | |
| | | | |
| | | | |

CONST. NO. 47026-3279-14

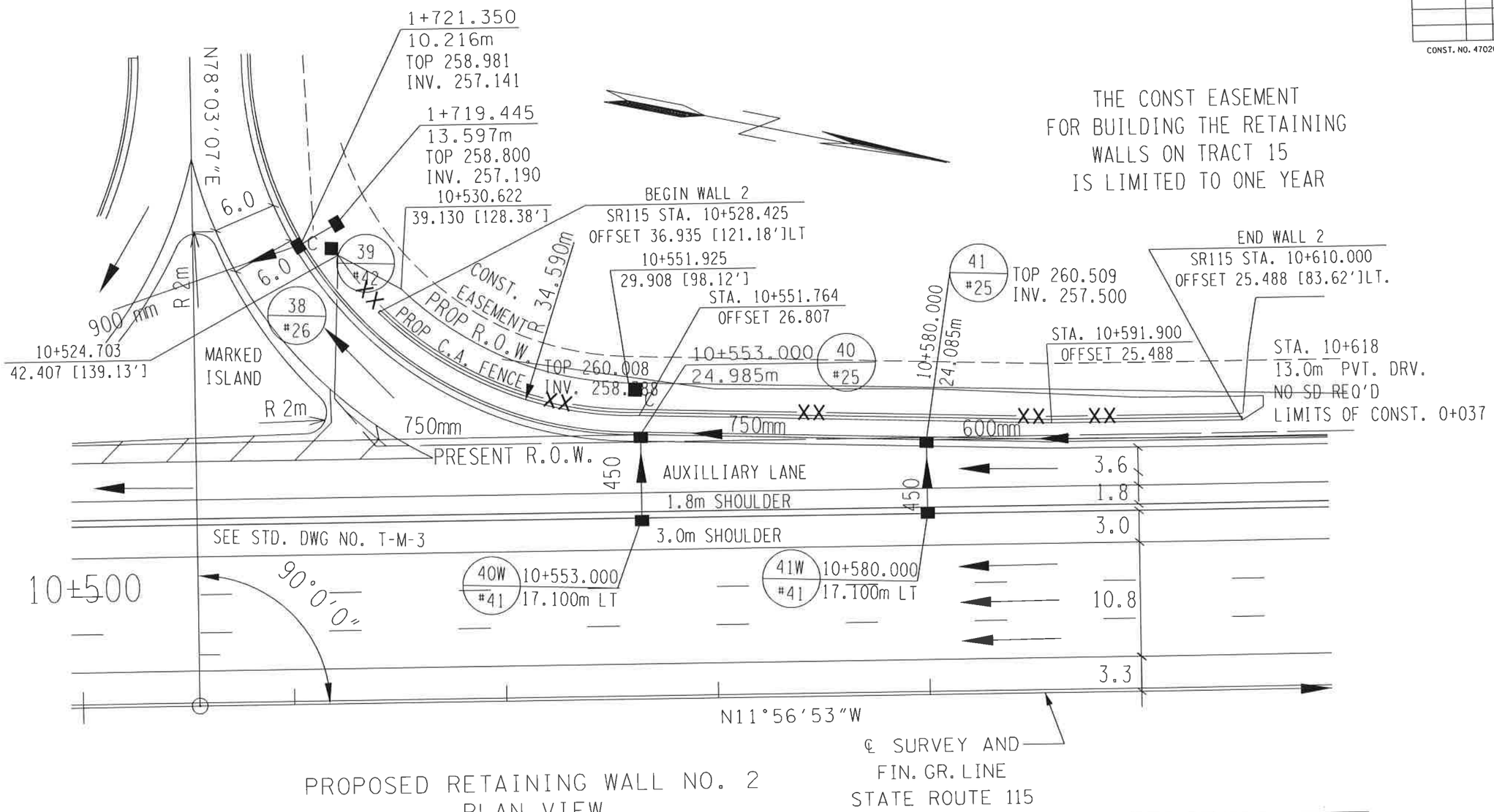


PROPOSED RETAINING WALL NO. 2
PLAN VIEW
(SCALE: 1:200)

TABLE 3-FOUNDATION PARAMENTS AND REQUIREMENTS FOR OTHER GRAVITY OR SEMI-GRAVITY WALLS

| STATION LIMITS | FOUNDATION BEARING CONDITION REQUIREMENT | NOMINAL BEARING RESISTANCE (KPa) | COEFFICIENT OF SLIDING FRICTION |
|---|---|---|---|
| 10+528.425 TO 10+610.000 | 0.305 METERS OF NUMBER 4 STONE | 240 kPa (5000 psf) | 0.60 |

| ESTIMATED QUANTITIES |
|---|
| 604M07.02 |
| RETAINING WALL (WALL NO.2) m2 |
| 151 |

METRIC

COORDINATES ARE NAD/83(1995), ARE DATUM ADJUSTED BY THE FACTOR OF 1.000 AND TIED TO THE TDRN. ALL ELEVATIONS ARE REFERENCED TO THE NAVD 1988.

STATE OF TENNESSEE
DEPARTMENT OF TRANSPORTATION

CONCEPTUAL DRAWING
RETAINING WALL NO. 2
STATE ROUTE 115

FROM STA. 10+528.425
TO STA. 10+610.000
KNOX COUNTY
2016

U-XXX-XXX

10/1/2015 11:51:29 AM
C:\Users\JJ00296\Documents\WORK\RecentWork\KnoxSR115\Walls\KnoxSR115RetWalls00241-04.dgn

| TYPE | YEAR | PROJECT NO. | SHEET NO. |
|---|---|---|---|
| CONST. | 2016 | NH-115(54) | |
| | | | |
| | | | |
| | | | |

CONST. NO. 47026-3279-14

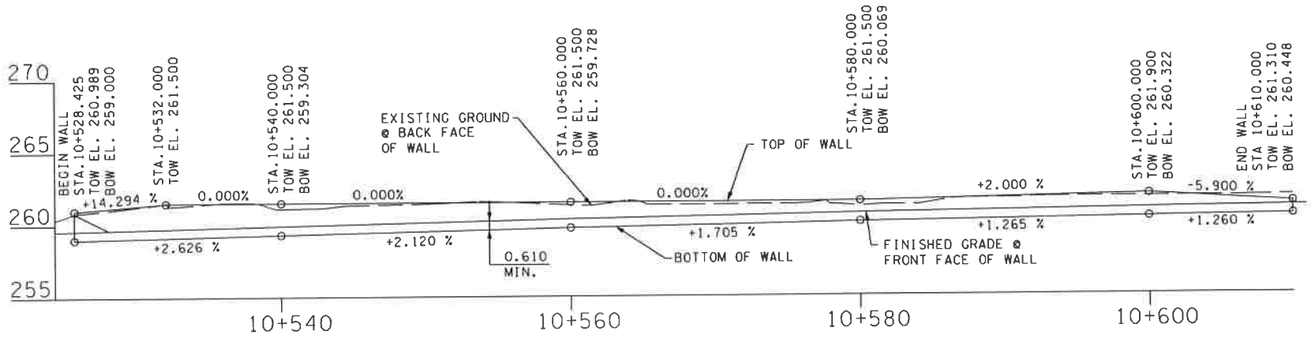


PROPOSED RETAINING WALL NO. 2
ELEVATION VIEW
(SCALE: 1:200)

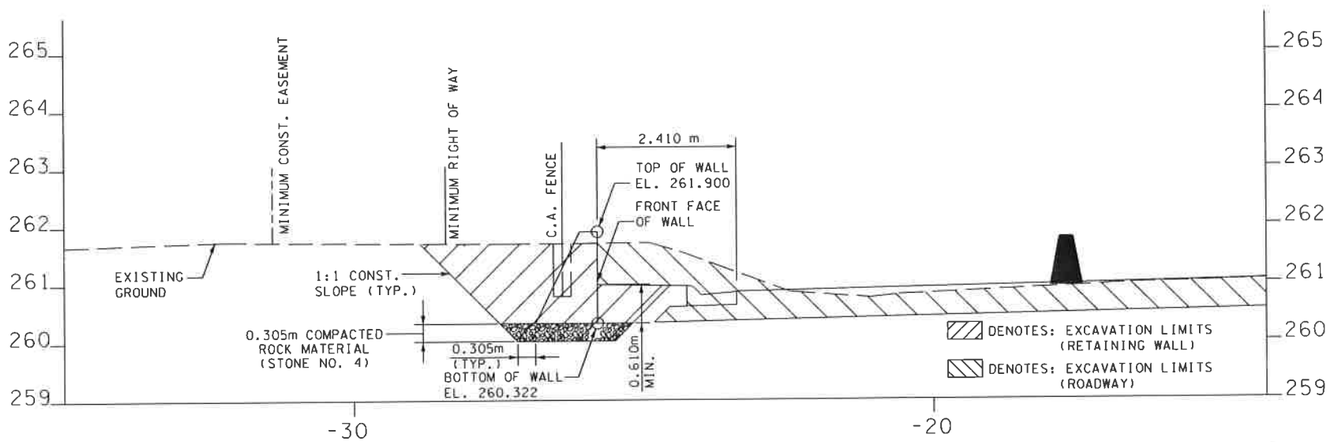


PROPOSED RETAINING WALL NO. 2
TYPICAL SECTION
STA. 10+600.000 (SCALE: 1:50)

NOTE: THE RETAINING WALL PAY QUANTITY IS BASED ON THE SURFACE AREA BETWEEN THE APPROXIMATE TOP OF WALL AND THE BOTTOM OF THE WALL OR TOP OF WALL FOOTING. THE ESTIMATED QUANTITY FOR THE CONCEPTUAL DRAWING: 151 m2

NOTE: IF A CONCRETE CANTILEVER WALL IS USED, ALL REINFORCING STEEL PROJECTING FROM FOOTING INTO THE WALL IN BACK FACE (FILL SIDE) SHALL BE EPOXY COATED.

NOTE: ASHLAR STONE FINISH TO BE USED ON FRONT FACE OF RETAINING WALL. TEXTURE FINISH ALL EXPOSED WALL SURFACES TO 1'-0" BELOW FINAL GROUND LINES. (MOUNTAIN GREY, FED. SPEC. NO. 36440). COST OF ASHLAR STONE AND TEXTURE FINISHES TO BE INCLUDED IN THE UNIT PRICE BID FOR ITEM NO. 604M07.02.

## RETAINING WALL DESIGN NOTES

SEE GEOTECHNICAL DESIGN NOTES AND REQUIREMENTS SHEET.

## ACCEPTABLE WALL TYPES

THE RETAINING WALL SHALL BE ONE OF THE WALL TYPES LISTED BELOW.

CAST-IN-PLACE CONCRETE GRAVITY WALL
CAST-IN-PLACE CONCRETE CANTILEVER WALL
PRECAST GRAVITY WALL

TENNESSEE METRIC D.O.T.

COORDINATES ARE NAD/83(1995), ARE DATUM ADJUSTED BY THE FACTOR OF 1.000 AND TIED TO THE TGRN. ALL ELEVATIONS ARE REFERENCED TO THE NAVD 1988.

STATE OF TENNESSEE
DEPARTMENT OF TRANSPORTATION

CONCEPTUAL DRAWING
RETAINING WALL NO. 2
STATE ROUTE 115

FROM STA. 10+528.425
TO STA. 10+610.000
KNOX COUNTY
2016

U-XXX-XXX

10/1/2015 11:52:00 AM
C:\Users\U00296\Documents\WORK\RecentWork\KnoxSR115\Walls\KnoxSR115RetWalls10024i-04.dgn

| TYPE | YEAR | PROJECT NO. | SHEET NO. |
|---|---|---|---|
| CONST. | 2016 | NH-115(54) | |
| | | | |
| | | | |
| | | | |

CONST. NO. 47026-3279-14

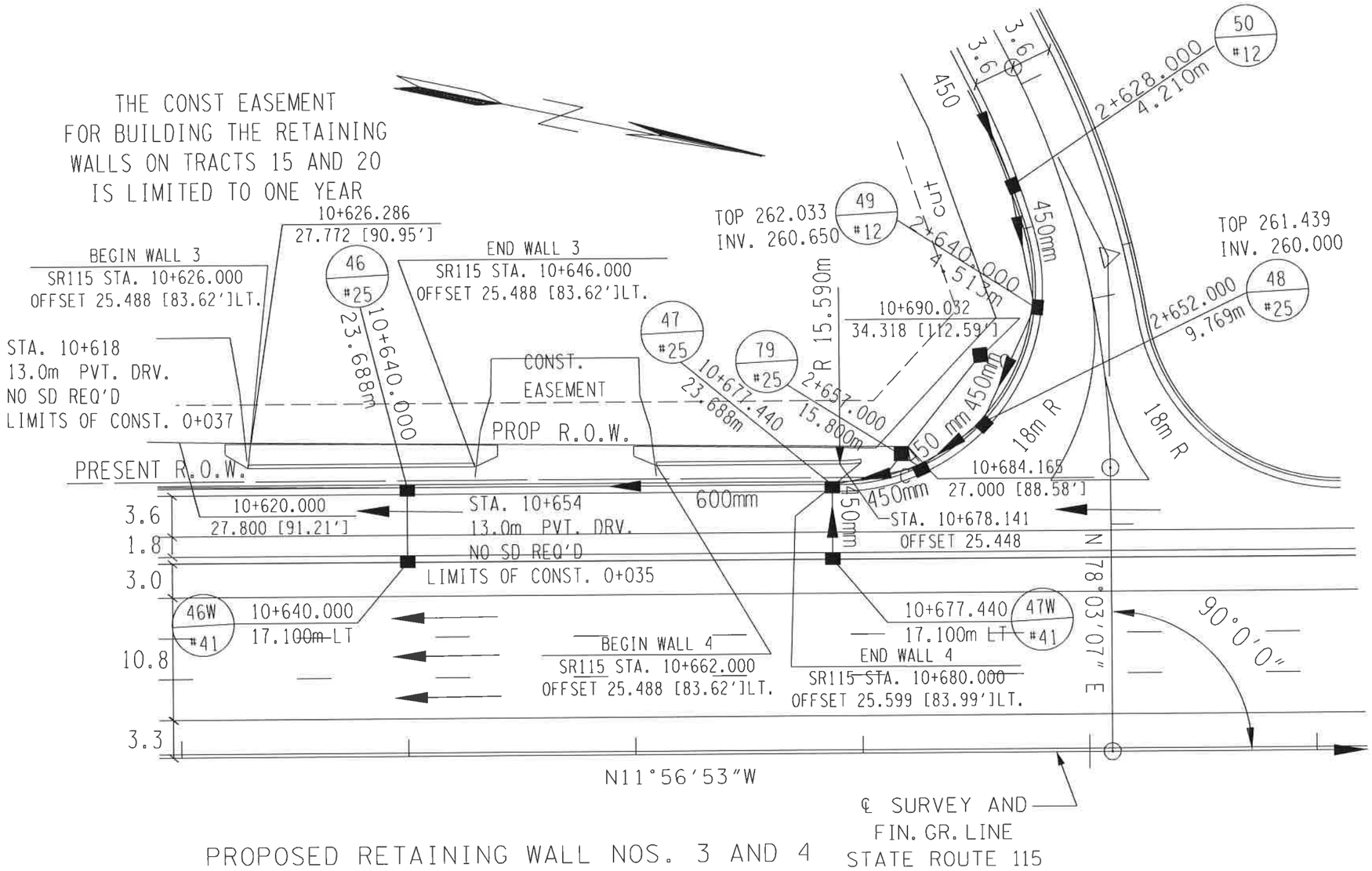


PROPOSED RETAINING WALL NOS. 3 AND 4
PLAN VIEW
(SCALE: 1:200)

| ESTIMATED QUANTITIES |
|---|
| 604M07.03 |
| RETAINING WALL (WALL NO.3) m2 |
| 30 |

| ESTIMATED QUANTITIES |
|---|
| 604M07.04 |
| RETAINING WALL (WALL NO.4) m2 |
| 25 |

TABLE 3-FOUNDATION PARAMENTS AND REQUIREMENTS FOR OTHER GRAVITY OR SEMI-GRAVITY WALLS

| STATION LIMITS | FOUNDATION BEARING CONDITION REQUIREMENT | NOMINAL BEARING RESISTANCE (KPa) | COEFFICIENT OF SLIDING FRICTION |
|---|---|---|---|
| 10+626.000 TO 10+646.000<br>10+662.000 TO 10+680.000 | 0.305 METERS OF NUMBER 4 STONE | 240 kPa (5000 psf) | 0.60 |

METRIC

COORDINATES ARE NAD/83(1995), ARE DATUM ADJUSTED BY THE FACTOR OF 1.000 AND TIED TO THE TCRN. ALL ELEVATIONS ARE REFERENCED TO THE NAVD 1988.

STATE OF TENNESSEE
DEPARTMENT OF TRANSPORTATION

CONCEPTUAL DRAWING
RETAINING WALL NOS. 3 & 4
STATE ROUTE 115
FROM STA. 10+626.000
TO STA. 10+646.000
FROM STA. 10+662.000
TO STA. 10+680.000
KNOX COUNTY
2016

U-XXX-XXX

10/1/2015 1:49:21 PM
C:\Users\JJ00296\Documents\WORK\RecentWork\KnoxSR115\Walls\KnoxSR115RetWalls100241-04.dgn

| TYPE | YEAR | PROJECT NO. | SHEET NO. |
|---|---|---|---|
| CONST. | 2016 | NH-115(54) | |
| | | | |
| | | | |

CONST. NO. 47026-3279-14

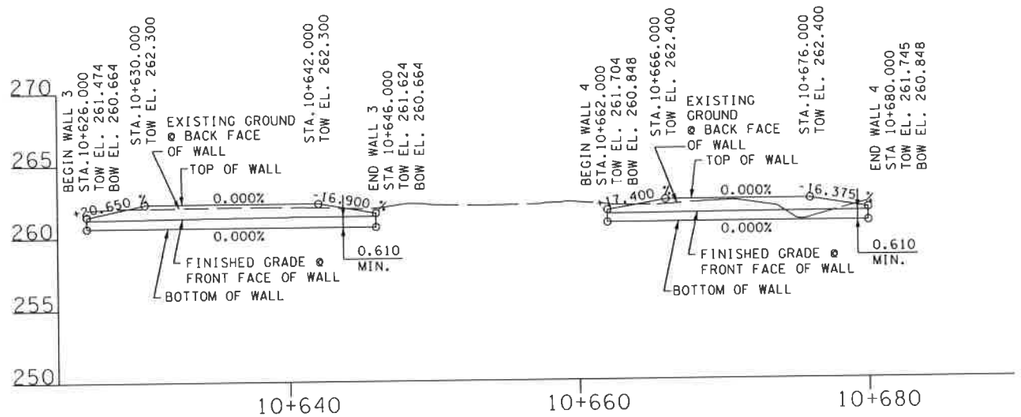


PROPOSED RETAINING WALL NOS. 3 AND 4
ELEVATION VIEW
(SCALE: 1:200)

NOTE: THE RETAINING WALL PAY QUANTITY IS BASED ON THE SURFACE AREA BETWEEN THE APPROXIMATE TOP OF WALL AND THE BOTTOM OF THE WALL OR TOP OF WALL FOOTING. THE ESTIMATED QUANTITY FOR THE CONCEPTUAL DRAWING: 30 m2 (WALL NO. 3) AND 25 m2 (WALL NO. 4)

NOTE: IF A CONCRETE CANTILEVER WALL IS USED, ALL REINFORCING STEEL PROJECTING FROM FOOTING INTO THE WALL IN BACK FACE (FILL SIDE) SHALL BE EPOXY COATED.

NOTE: ASHLAR STONE FINISH TO BE USED ON FRONT FACE OF RETAINING WALL. TEXTURE FINISH ALL EXPOSED WALL SURFACES TO 1'-0" BELOW FINAL GROUND LINES. (MOUNTAIN GREY, FED. SPEC. NO. 36440). COST OF ASHLAR STONE AND TEXTURE FINISHES TO BE INCLUDED IN THE UNIT PRICE BID FOR ITEM NOS. 604M07.03 AND 604M07.04.

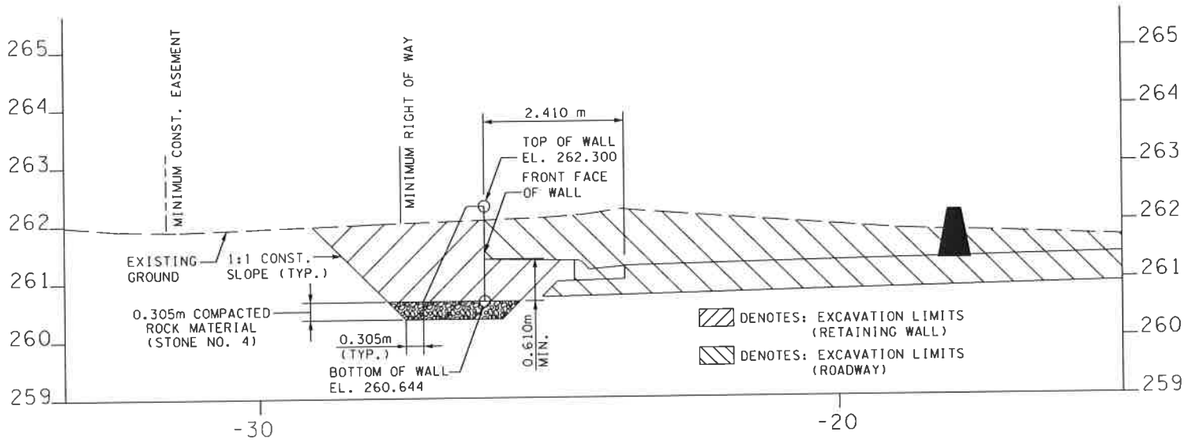


PROPOSED RETAINING WALL NOS. 3 AND 4
TYPICAL SECTION
STA. 10+640.000 (SCALE: 1:50)

## RETAINING WALL DESIGN NOTES

SEE GEOTECHNICAL DESIGN NOTES AND REQUIREMENTS SHEET.

## ACCEPTABLE WALL TYPES

THE RETAINING WALL SHALL BE ONE OF THE WALL TYPES LISTED BELOW.

CAST-IN-PLACE CONCRETE GRAVITY WALL
CAST-IN-PLACE CONCRETE CANTILEVER WALL
PRECAST GRAVITY WALL

METRIC

COORDINATES ARE NAD/83(1995), ARE DATUM ADJUSTED BY THE FACTOR OF 1.000 AND TIED TO THE TGRN. ALL ELEVATIONS ARE REFERENCED TO THE NAVD 1988.

STATE OF TENNESSEE
DEPARTMENT OF TRANSPORTATION

CONCEPTUAL DRAWING
RETAINING WALL NOS. 3 & 4
STATE ROUTE 115
FROM STA. 10+626.000
TO STA. 10+646.000
FROM STA. 10+662.000
TO STA. 10+680.000
KNOX COUNTY
2016

U-XXX-XXX

10/1/2015 1:49:47 PM
C:\Users\JJ00296\Documents\WORK\RecentWork\KnoxSR115\Walls\KnoxSR115RetWalls\0024i-04.dgn

| TYPE | YEAR | PROJECT NO. | SHEET NO |
|---|---|---|---|
| CONST. | 2016 | NH-115(54) | |
| | | | |
| | | | |
| | | | |

CONST. NO. 47026-3279-14

NOTE: GUARDRAIL LIMITS NOT SHOWN FOR CLARITY. SEE ROADWAY PLANS.

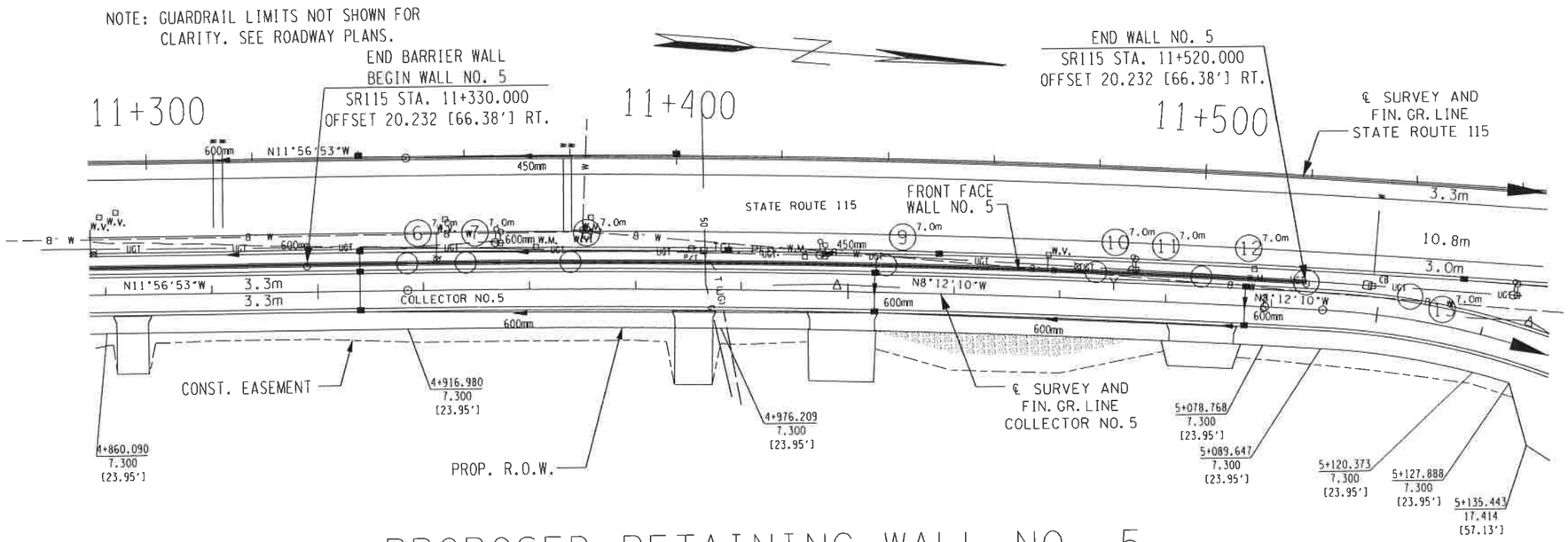


# PROPOSED RETAINING WALL NO. 5
## PLAN VIEW
## (SCALE: 1:500)

SR 115
PI 11+463.805
N 177,380.4024
E 784,544.8782
Δ 5° 15' 33" (RT)
R 2,500.000
L 229.477
T 114.819
E 2.635
L.C. 229.397
SE 2.40%
DESIGN SPEED 110km/h
TRANS. LENGTH 75m

COLLECTOR NO.5
PI 4+997.904
N 177,352.4160
E 784,576.3540
Δ 3° 44' 43" (RT)
R 2,475.000
L 161.788
T 80.923
T 1.323
SE N.C.
DESIGN SPEED 70 km/h
TRANS. LENGTH 0

METRIC

COORDINATE VALUES ARE NAD/83\1995
AND ARE DATUM ADJUSTED BY THE
FACTOR 1.00 & TIED TO THE TGR

STATE OF TENNESSEE
DEPARTMENT OF TRANSPORTATIO

CONCEPTUAL DRAWING
RETAINING WALL NO. 5
STATE ROUTE 115

FROM STA. 11+330.000
TO STA. 11+520.000
KNOX COUNTY
2016

U-XXX-XXX

10/8/2015 11:29:05 AM
C:\Users\JJ00296\Documents\WORK\RecentWork\KnoxSR15\Walls\KnoxSR15RetWalls\00241-04.dgn

| TYPE | YEAR | PROJECT NO. | SHEET NO |
|---|---|---|---|
| CONST. | 2016 | NH-115(54) | |

CONST. NO. 47026-3279-14

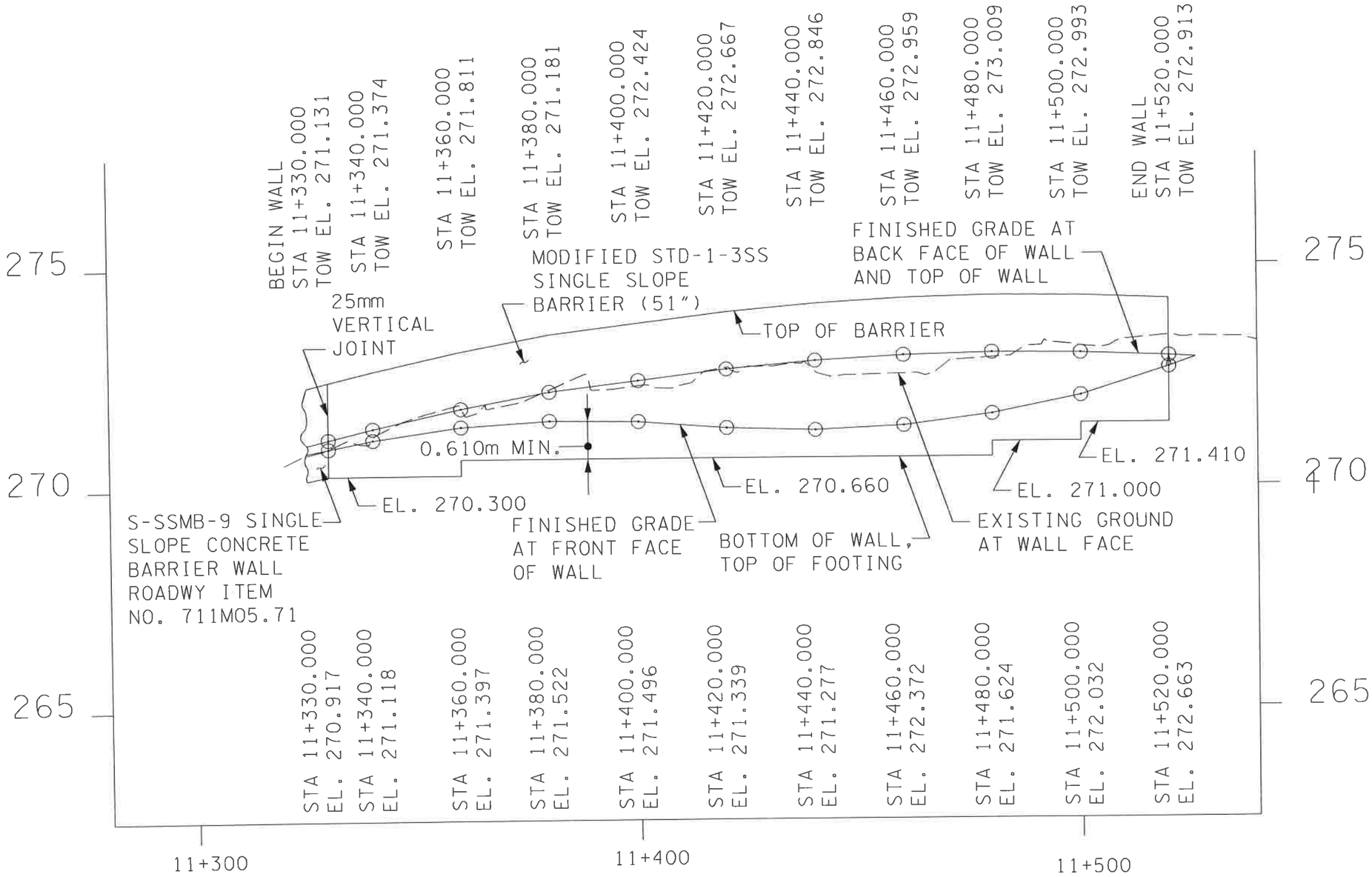


# PROPOSED RETAINING WALL NO. 5
## ELEVATION VIEW
(SCALE: HORIZ. 1:500 VERT. 1:50)

METRIC

COORDINATE VALUES ARE NAD/83(1995
AND ARE DATUM ADJUSTED BY THE
FACTOR 1.00 & TIED TO THE TGR

STATE OF TENNESSEE
DEPARTMENT OF TRANSPORTATIO

CONCEPTUAL DRAWING
RETAINING WALL NO. 5
STATE ROUTE 115

FROM STA. 11+330.000
TO STA. 11+520.000
KNOX COUNTY
2016

U-XXX-XXX

10/8/2015 11:29:33 AM
C:\Users\JJ00296\Documents\WORK\RecentWork\KnoxSR115\Walls\KnoxSR115RetWallsI0024I-04.dgn

| TYPE | YEAR | PROJECT NO. | SHEET NO. |
|---|---|---|---|
| CONST. | 2016 | NH-115(54) | |
| | | | |
| | | | |
| | | | |

CONST. NO. 47026-3279-14

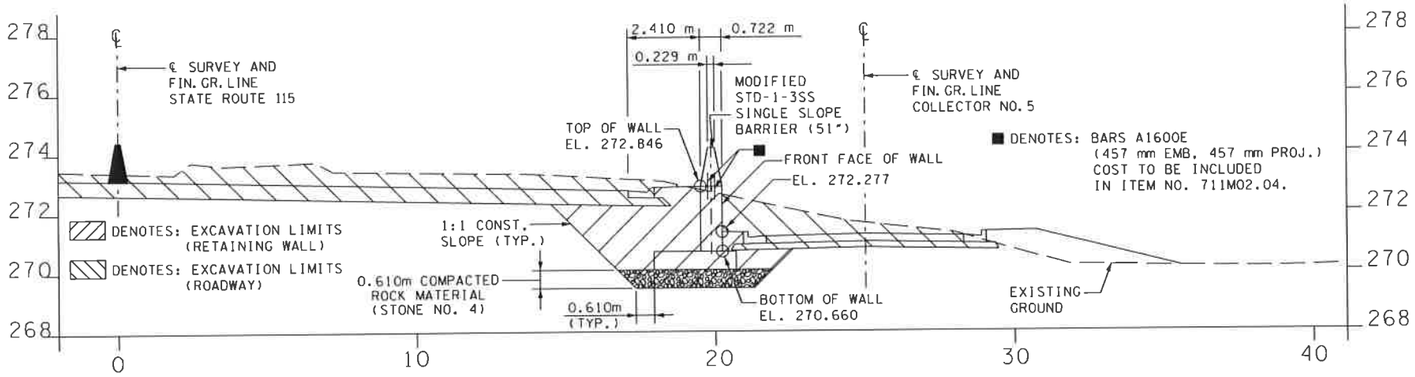


# PROPOSED RETAINING WALL NO. 5
## TYPICAL SECTION
## STA. 11+440.000 (SCALE: 1:100)

NOTE: THE RETAINING WALL PAY QUANTITY IS BASED ON THE SURFACE AREA BETWEEN THE APPROXIMATE TOP OF WALL AND THE BOTTOM OF THE WALL OR TOP OF WALL FOOTING. THE ESTIMATED QUANTITY FOR THE CONCEPTUAL DRAWING: 337 m2

NOTE: IF A CONCRETE CANTILEVER WALL IS USED, ALL REINFORCING STEEL PROJECTING FROM FOOTING INTO THE WALL IN BACK FACE (FILL SIDE) SHALL BE EPOXY COATED.

NOTE: ASHLAR STONE FINISH TO BE USED ON FRONT FACE OF RETAINING WALL. TEXTURE FINISH ALL EXPOSED WALL SURFACES TO 1'-0" BELOW FINAL GROUND LINES. (MOUNTAIN GREY, FED. SPEC. NO. 36440). COST OF ASHLAR STONE AND TEXTURE FINISHES TO BE INCLUDED IN THE UNIT PRICE BID FOR ITEM NO. 604M07.05.

| ESTIMATED QUANTITIES | |
|---|---|
| 604M07.05 | 711M02.04 |
| RETAINING WALL (WALL NO.5) m2 | REINFORCED CONCRETE MEDIAN BARRIER (1300 mm HEIGHT) m |
| 337 | 190 |

## RETAINING WALL DESIGN NOTES

SEE GEOTECHNICAL DESIGN NOTES AND REQUIREMENTS SHEET.

## ACCEPTABLE WALL TYPES

THE RETAINING WALL SHALL BE ONE OF THE WALL TYPES LISTED BELOW.

CAST-IN-PLACE CONCRETE GRAVITY WALL
CAST-IN-PLACE CONCRETE CANTILEVER WALL
PRECAST GRAVITY WALL

METRIC

COORDINATE VALUES ARE NAD/83(1995 AND ARE DATUM ADJUSTED BY THE FACTOR 1.00 & TIED TO THE TGR

STATE OF TENNESSEE
DEPARTMENT OF TRANSPORTATIO

CONCEPTUAL DRAWING
RETAINING WALL NO. 5
STATE ROUTE 115

FROM STA. 11+330.000
TO STA. 11+520.000
KNOX COUNTY
2016

U-XXX-XXX

10/8/2015 11:28:42 AM
C:\Users\JJ00296\Documents\WORK\RecentWork\KnoxSR115\Walls\KnoxSR115RetWalls10024I-04.dgn

| TYPE | YEAR | PROJECT NO. | SHEET NO |
|---|---|---|---|
| CONST. | 2016 | NH-115(54) | |
| | | | |
| | | | |
| | | | |

CONST. NO. 47026-3279-14

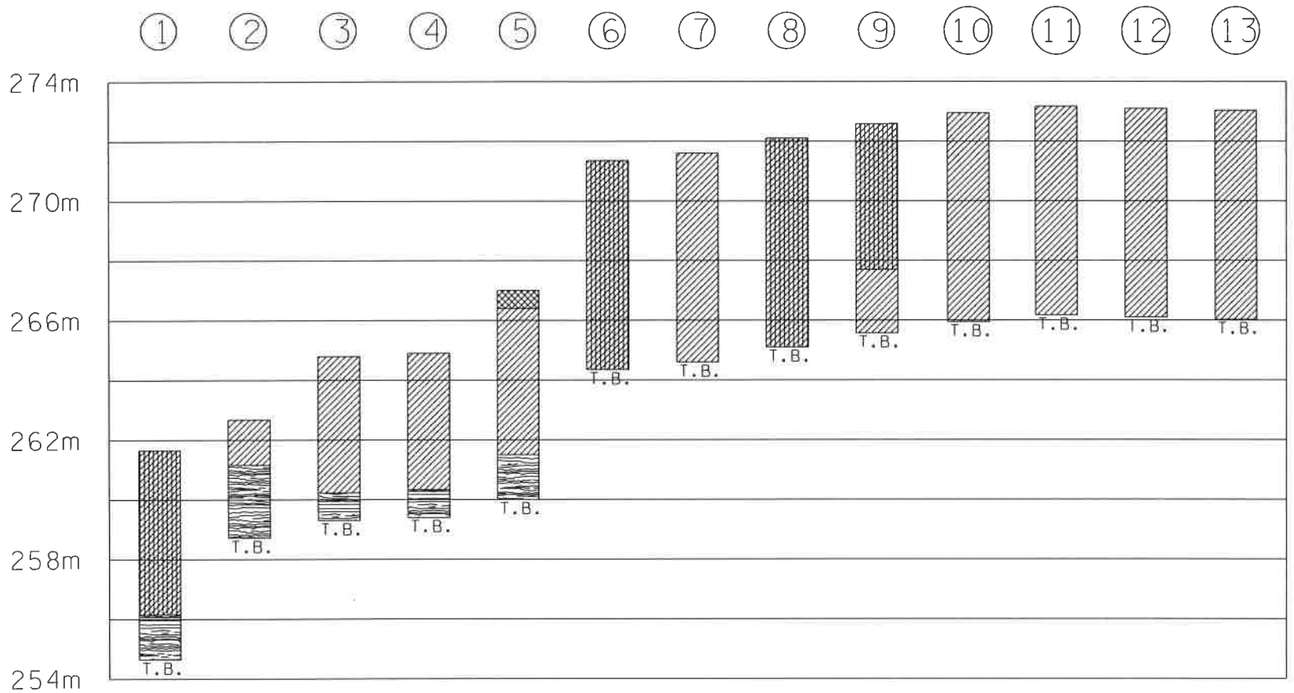


## LEGEND

- CLAY (TYPE A MATERIAL)
- SILTY CLAY (TYPE A MATERIAL)
- SHALE (TYPE C MATERIAL)
- FILL AND SOIL

TYPE MATERIAL-SEE DEFINITION OF TERMS USED FOR EARTHWORK GRADING CALCULATIONS SHEET.
T.B.= TERMINATED BORING

| BORING NO. | STATION | OFFSET | GROUND ELEVATION | ROCK ELEVATION | TOTAL DEPTH |
|---|---|---|---|---|---|
| 1 | 11+040.00 | RT 24.12m | 261.65m | 256.15m | 7.00m |
| 2 | 11+080.00 | RT 22.521m | 262.68m | 261.16m | 3.96m |
| 3 | 11+120.00 | RT 20.92m | 264.80m | 260.23m | 5.50m |
| 4 | 11+140.00 | RT 21.12m | 264.90m | 260.33m | 5.50m |
| 5 | 11+220.00 | RT 19.89m | 267.00m | 261.5m | 7.00m |
| 6 | 11+348.99 | RT 19.89m | 271.35m | N/A | 7.00m |
| 7 | 11+360.00 | RT 19.89m | 271.60m | N/A | 7.00m |
| 8 | 11+380.00 | RT 19.89m | 272.10m | N/A | 7.00m |
| 9 | 11+440.00 | RT 19.89m | 272.58m | N/A | 7.00m |
| 10 | 11+480.00 | RT 19.89m | 272.95m | N/A | 7.00m |
| 11 | 11+500.00 | RT 19.89m | 273.17m | N/A | 7.00m |
| 12 | 11+520.00 | RT 19.89m | 273.10m | N/A | 7.00m |
| 13 | 11+540.00 | RT 21.41m | 273.03m | N/A | 7.00m |

NOTE:
BORING DEPICTIONS SHOWN ON FOUNDATION DATA SHEET INDICATE GENERAL SOIL AND ROCK TYPES AT THE SPECIFIC BORING LOCATIONS.

METRIC

COORDINATE VALUES ARE NAD/83(1995 AND ARE DATUM ADJUSTED BY THE FACTOR 1.00 & TIED TO THE TGR

STATE OF TENNESSEE
DEPARTMENT OF TRANSPORTATIO

FOUNDATION DATA
RETAINING WALL NO. 5
STATE ROUTE 115
MALONEY RD
TO WOODSON DR
KNOX COUNTY
2016

U-XXX-XXX

10/8/2015 11:28:11 AM
C:\Users\JJ00296\Documents\WORK\RecentWork\Knox5RW5\Walls\Knox5RW5Ret1WallsJ00241-04.dgn

| TYPE | YEAR | PROJECT NO. | SHEET NO. |
|---|---|---|---|
| CONST. | 2016 | 47026-3279-14 | |

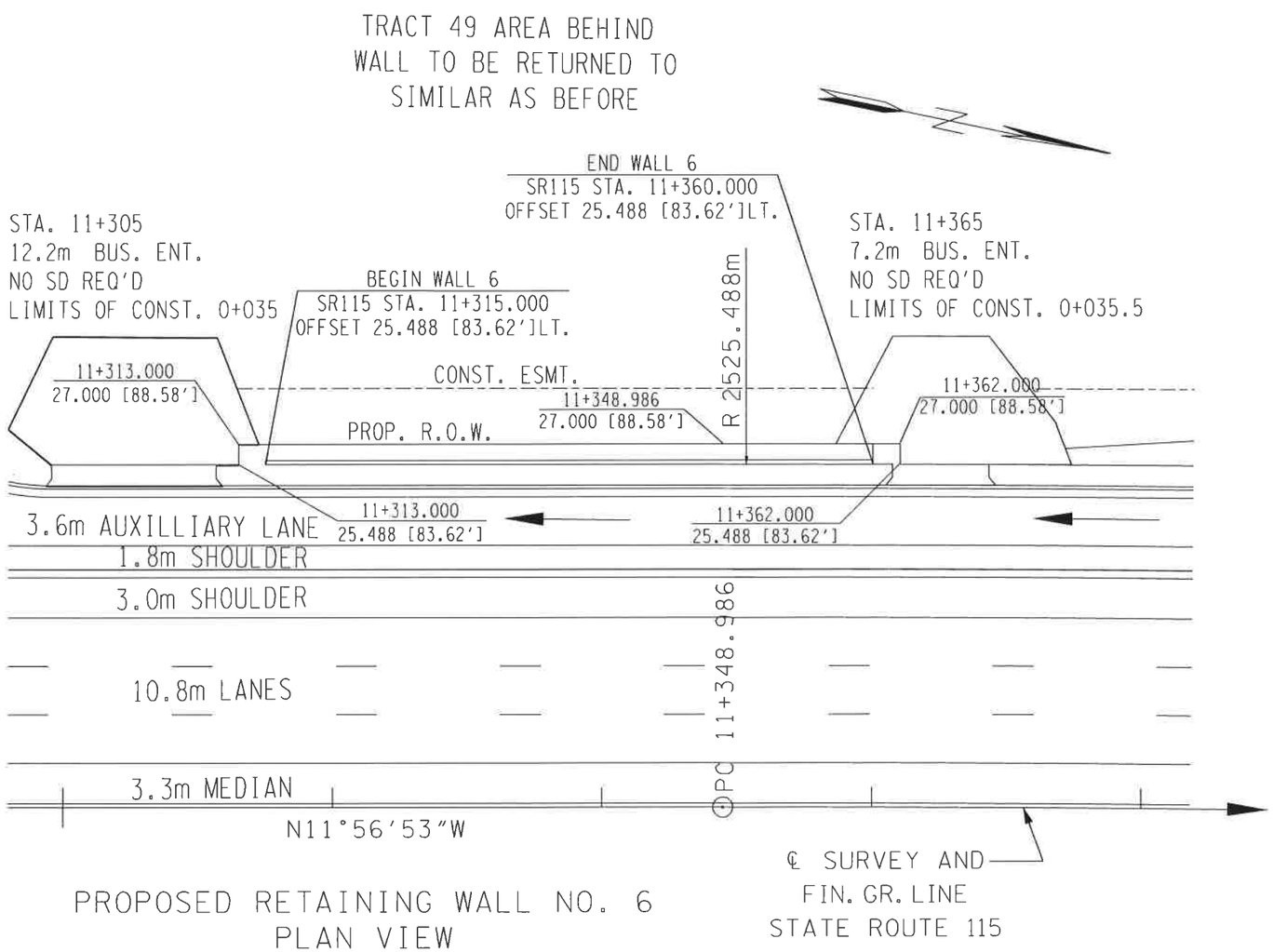


PROPOSED RETAINING WALL NO. 6
PLAN VIEW
(SCALE: 1:200)

SR 115
PI 11+463.805
N 177,380.4024
E 784,544.8782
Δ 5° 15′ 33″ (RT)
R 2,500.000
L 229.477
T 114.819
E 2.635
L.C. 229.397
SE 2.40%
DESIGN SPEED 110km/h
TRANS. LENGTH 75m

TABLE 3-FOUNDATION PARAMENTS AND REQUIREMENTS FOR OTHER GRAVITY OR SEMI-GRAVITY WALLS

| STATION LIMITS | FOUNDATION BEARING CONDITION REQUIREMENT | NOMINAL BEARING RESISTANCE (KPa) | COEFFICIENT OF SLIDING FRICTION |
|---|---|---|---|
| 11+315.000 TO 11+360.000 | 0.305 METERS OF NUMBER 4 STONE | 240 kPa (5000 psf) | 0.60 |

| ESTIMATED QUANTITIES |
|---|
| 604M07.06 |
| RETAINING WALL (WALL NO.6) m2 |
| 44 |

COORDINATES ARE NAD/83(1995), ARE DATUM ADJUSTED BY THE FACTOR OF 1.000 AND TIED TO THE TGRN. ALL ELEVATIONS ARE REFERENCED TO THE NAVD 1988.

STATE OF TENNESSEE
DEPARTMENT OF TRANSPORTATION

CONCEPTUAL DRAWING
RETAINING WALL NO. 6
STATE ROUTE 115

FROM STA. 11+315.000
TO STA. 11+360.000
KNOX COUNTY
2016

U-XXX-XXX

10/2/2015 3:33:35 PM
C:\Users\J00296\Documents\WORK\RecentWork\KnoxSR115\Walls\KnoxSR115RetWalls\00241-04.dgn

| TYPE | YEAR | PROJECT NO. | SHEET NO. |
|---|---|---|---|
| CONST. | 2016 | NH-115(54) | |
| | | | |
| | | | |
| | | | |

CONST. NO. 47026-3279-14

## ACCEPTABLE WALL TYPES

THE RETAINING WALL SHALL BE ONE OF THE WALL TYPES AS LISTED ON THE "RETAINING WALL DETAILS SHEET(S)". FOR RETAINING WALL SYSTEMS LISTED AS BIN WALL, CRIB WALL, PRECAST GRAVITY WALL, MSE (EITHER SEGMENTAL PANEL OR MODULAR BLOCK) AND GROUND ANCHOR WALL; THE SPECIFIC WALL SYSTEM SUPPLIER/INSTALLER SHALL BE ONE OF THOSE LISTED AS PRE-APPROVED IN OPL 38.

### RETAINING WALL DESIGN NOTES

UNLESS SPECIFICALLY STATED OTHERWISE IN THE CONTRACT PLANS, THE BIDDING FOR, THE DESIGN OF AND THE CONSTRUCTION OF RETAINING WALLS SHOWN IN THE PLANS SHALL BE GOVERNED BY THE TENNESSEE DEPARTMENT OF TRANSPORTATION SPECIAL PROVISION 624 REGARDING RETAINING WALLS. THIS SPECIAL PROVISION SHALL BE CONSIDERED AS ONE OF THOSE DOCUMENTS WHICH THE BIDDER/CONTRACTOR HAS EXAMINED AND MADE HIMSELF FAMILIAR WITH AS DESCRIBED IN SECTION 102.04 - EXAMINATION OF THE SITE, THE WORK, THE PLANS, AND THE SPECIFICATIONS IN THE TDOT STANDARD SPECIFICATIONS FOR ROAD AND BRIDGE CONSTRUCTION.

EXCAVATION FOR THE WALL AND/OR ITS FOOTING SHALL NOT BE ACCOMPLISHED UNTIL THE CONTRACTOR HAS SUBMITTED WALL DESIGNS AND CALCULATIONS AND HAS BEEN ISSUED AN APPROVED SET OF WALL PLANS AND HAS LABOR AND MATERIAL RESOURCES AVAILABLE TO BEGIN AND CONTINUE WALL CONSTRUCTION IMMEDIATELY AFTER EXCAVATION.

THIS WALL SHALL BE DESIGNED IN ACCORDANCE WITH LRFD DESIGN PROCEDURES AND REQUIREMENTS AS DESCRIBED IN 1) AASHTO LRFD BRIDGE DESIGN SPECIFICATIONS, 2014 AND INTERIMS.

FOR PROPRIETARY WALL SYSTEMS THAT HAVE BEEN APPROVED AS SHOWN IN OPL 38, THE WALL DESIGNER SHALL BE RESPONSIBLE FOR PROVIDING WALL DESIGNS INCORPORATING MATERIALS AND COMPONENTS (I.E. REINFORCEMENT CONNECTION DEVICES, SPECIFIC MANUFACTURER AND PROPERTIES OF GEOGRID) AS WAS ORIGINALLY SUBMITTED AND APPROVED BY TDOT. IF A MATERIAL AND/OR COMPONENT OF THE WALL SYSTEM HAVE BEEN MODIFIED FROM THE ORIGINALLY APPROVED SYSTEM, A WALL DESIGN AND SET OF PLANS AND CALCULATIONS FOR THIS WALL SYSTEM CANNOT BE SUBMITTED FOR REVIEW AND APPROVAL UNTIL THE WALL SYSTEM DESIGNER WHO ORIGINALLY SUBMITTED THE WALL SYSTEM FOR APPROVAL BY TDOT SUBMITS A REQUEST FOR RE-APPROVAL UTILIZING THE MODIFIED ELEMENTS OF THE WALL. THIS SUBMITTAL DOES NOT GUARANTEE APPROVAL OF THE MODIFIED SYSTEM. IF THIS RE-APPROVAL PROCESS DOES NOT MEET THE CONTRACTOR'S SCHEDULE OR IF THE MODIFIED SYSTEM IS NOT APPROVED, THE CONTRACTOR/WALL DESIGNER SHALL PROVIDE A WALL DESIGN FOR ONE OF THE APPROVED SYSTEMS AT NO CHANGE IN CONTRACT PRICE FOR THE RETAINING WALL AND NO CHANGE IN PROJECT SCHEDULE REQUIREMENTS WILL BE ALLOWED.

THE WALL DESIGNER SHALL PROVIDE RETAINING WALL PLANS, DETAILS AND CALCULATIONS AS REQUIRED BY SPECIAL PROVISION 624 AND AS REQUIRED HEREIN.

- THE WALL DESIGNER SHALL UTILIZE THE GEOTECHNICAL PARAMETERS AND RESISTANCE FACTORS AS PROVIDED FOR EACH PROJECT RETAINING WALL ON THE WALL CONCEPT SHEET AND RELATED RETAINING WALL SHEETS TO PREPARE AND SUBMIT DESIGN CALCULATIONS. LOAD FACTORS AND OTHER PERTINENT DESIGN REQUIREMENTS PROVIDED IN AASHTO LRFD BRIDGE DESIGN SPECIFICATIONS, 2014 AND INTERIMS SHALL BE USED FOR NON-MSE WALLS AND PUBLICATION FHWA-NHI-10-024/FHWA GEC 011, DESIGN AND CONSTRUCTION OF MECHANICALLY STABILIZED EARTH WALLS AND REINFORCED SOIL SLOPES, NOVEMBER 2009 FOR MSE WALLS.
- CALCULATIONS FOR BOTH INTERNAL AND EXTERNAL STABILITY (SLIDING, ECCENTRICITY, AND BEARING CAPACITY-GLOBAL STABILITY AND SETTLEMENT BEING THE EXCEPTIONS) SHALL BE PROVIDED FOR EACH CRITICAL WALL SECTION WHICH DEMONSTRATES THE REQUIRED CAPACITY TO DEMAND RATIO OF 1.0 IS MET UTILIZING THE DESIGN PARAMETERS PROVIDED. FOR MSE WALLS, THE WALL DESIGNER MUST ADJUST THE REINFORCEMENT LENGTHS BEYOND THOSE MINIMUM REQUIRED LENGTHS, IF REQUIRED, TO MEET BOTH INTERNAL AND EXTERNAL REQUIREMENTS. THE WALL DESIGNER/CONTRACTOR PLANS MUST INCLUDE ANY FOUNDATION IMPROVEMENTS AS REQUIRED HEREIN ON THE WALL DESIGNER/CONTRACTOR'S WALL ELEVATION VIEWS AND ANY CROSS-SECTIONAL DETAIL DRAWINGS.
- UNLESS OTHERWISE STATED, THE WALL DESIGNER CAN ASSUME THAT MINIMUM GLOBAL STABILITY AND SETTLEMENT CRITERIA IS ACHIEVED WITH A WALL DESIGN MEETING OTHER MINIMUM EXTERNAL STABILITY REQUIREMENTS AND ASSUMING WALL FOUNDATION CONDITIONS ARE MET. WHILE THE WALL DESIGNER'S DESIGN MUST DEMONSTRATE COMPLIANCE WITH EXTERNAL STABILITY REQUIREMENTS AS DISCUSSED ABOVE, THE WALL DESIGNER MAY PROVIDE CERTIFICATION (BY SIGNING AND STAMPING BY PROFESSIONAL ENGINEER REGISTERED IN STATE OF TENNESSEE) OF THE WALLS PLANS AND CALCULATIONS "FOR INTERNAL STABILITY ONLY".

### NOTE REGARDING CONSTRUCTION SLOPES

THE CONTRACTOR SHALL BE RESPONSIBLE FOR MAKING THE EXCAVATION IN ACCORDANCE WITH OSHA AND OTHER APPLICABLE STATE AND LOCAL REGULATIONS REGARDING CONSTRUCTION SLOPES AND TRENCHES. IN ADDITION TO FOLLOWING APPLICABLE REGULATORY REQUIREMENTS, AS A MINIMUM REQUIREMENT, ALL TEMPORARY CONSTRUCTION SLOPES SHALL BE PLACED AT A MAXIMUM OF A 1:1 SLOPE IN SOIL AND SHALL NOT BE LEFT OPEN WITHOUT SHORING FOR ANY LONGER THAN ABSOLUTELY NECESSARY. THE CONTRACTOR BUILDING THE WALL SHALL ENSURE THAT THESE TEMPORARY BACK SLOPES ARE NOT AND DO NOT BECOME UNSTABLE. IF SLOPE IS UNSTABLE, BECOMES UNSTABLE, IS CUT STEEPER THAT A 1:1 SLOPE OR IS UNACCEPTABLE FOR ANOTHER REASON, THEN TEMPORARY SHORING SHALL BE USED. ANY UNUSUAL SOIL CONDITIONS OTHER THAN THOSE ASSUMED SHOULD BE REPORTED TO THE PROJECT ENGINEER.

### TABLE 1-DESIGN REQUIREMENTS AND PARAMETERS

| DESCRIPTION | VALUE | NOTE |
|---|---|---|
| DESIGN LIFE | 75 YEARS | |
| SEISMIC ACCELERATION COEFFICIENT (As) | 0.190 | |
| **EFFECTIVE (DRAINED) FRICTION ANGLE** | | |
| RETAINED BACKFILL-UNCLASSIFIED SITE OR BORROW SOIL | 28° | |
| RETAINED BACKFILL-SELECT BACKFILL | 34° | 1 |
| REINFORCED BACKFILL | NOT APPLICABLE | 1 |
| **UNIT WEIGHT** | | |
| UNCLASSIFIED SITE OR BORROW SOIL | 1920 kg/m³ (120 pcf) | |
| SELECT BACKFILL MATERIAL | VARIES | 1A |
| **DESIGN BASIS** | | |
| COEFFICIENT OF SLIDING FRICTION | SEE TABLE 3 | 3 |
| NOMINAL BEARING RESISTANCE | SEE TABLE 3 | 3 |
| LIMITING ECCENTRICITY | B/3 (SOIL), 9B/20 (ROCK) | |
| **RESISTANCE FACTORS** | | |
| SLIDING-STATIC | 1.0 | 4 |
| SLIDING-COMBINED STATIC+EARTHQUAKE | 0.9 | 4 |
| BEARING-STATIC | 0.55 | |
| BEARING-COMBINED STATIC+EARTHQUAKE | 0.8 | |

### TABLE 1.1 NOTES FOR TABLE 1

| NO. | NOTE |
|---|---|
| 1 | A MAXIMUM FRICTION ANGLE OF 34 DEGREES CAN BE ASSUMED FOR MATERIAL MEETING SPECIFICATIONS IN SECTION F, PART1, AND ITEM E OF TENNESSEE DEPARTMENT OF TRANSPORTATION SPECIAL PROVISION 624 REGARDING RETAINING WALLS. A HIGHER FRICTION ANGLE THAN 34 DEGREES CAN BE UTILIZED IF THE CONTRACTOR SUBMITS INDEPENDENT TESTING AND IT IS VERIFIED BY TDOT. HOWEVER, IN NO CASE SHALL THE FRICTION ANGLE FOR ANALYSIS EXCEED 40 DEGREES. |
| 1A | SELECT BACKFILL UNIT WEIGHT TO BE DETERMINED BY CONTRACTOR/DESIGNER DEPENDING ON ACTUAL BACKFILL MATERIAL USED. SELECT BACKFILL IS DEFINED AS MATERIAL MEETING SPECIFICATIONS IN SECTION F, PART 1, AND ITEM E OF TENNESSEE DEPARTMENT OF TRANSPORTATION SPECIAL PROVISION 624 REGARDING RETAINING WALLS. IN ORDER TO UTILIZE $\phi$ FOR SELECT BACKFILL DESIGN, SELECT BACKFILL MUST BE PLACED FOR A MINIMUM ZONE FORMED BY A 1:1 SLOPE FROM 2 FEET BEHIND THE BOTTOM OF BACK OF WALL FOOTING OR REINFORCED SOIL ZONE FOR MSE WALLS UP TO FINISHED GRADE. |
| 2 | H IS DESIGN HEIGHT OF THE WALL AND IS DEFINED AS THE DIFFERENCE IN ELEVATION BETWEEN THE FINISHED GRADE AT THE TOP OF THE WALL AND THE TOP OF LEVELING PAD OR BOTTOM OF FOOTING FOR NON-MSE WALLS. THE TOP OF THE LEVELING PAD SHALL ALWAYS BE BELOW THE MINIMUM EMBEDMENT REFERENCE LINE AS INDICATED ON THE PLANS FOR THAT LOCATION. THE LENGTH OF THE SOIL REINFORCEMENT, L, IS MEASURED FROM THE BACKFACE OF THE WALL FACING UNIT. IN CASE OF GRID TYPE REINFORCEMENTS THE LENGTH OF THE SOIL REINFORCEMENT IS MEASURED FROM THE BACKFACE OF THE WALL FACING UNIT TO THE LAST FULL TRANSVERSE MEMBER. FOR MODULAR BLOCKFACING UNITS, THE TOTAL LENGTH OF THE REINFORCEMENT, Br AS MEASURED FROM THE FRONT FACE OF THE WALL IS THE LENGTH L AS DEFINED ABOVE PLUS THE WIDTH OF THE MODULAR BLOCK UNIT (THE HORIZONTAL DIMENSION OF THE BLOCK UNIT MEASURED PERPENDICULAR TO THE WALL FACE). |
| 2A | WALL DESIGNER MUST ADJUST THE REINFORCEMENT LENGTHS BEYOND THOSE MINIMUM REQUIRED LENGTHS, IF REQUIRED, TO MEET BOTH INTERNAL AND EXTERNAL STABILITY REQUIREMENTS. MINIMUM REINFORCEMENT LENGTHS MAY BE REQUIRED FOR GLOBAL STABILITY. THIS REQUIREMENT WILL BE SHOWN IN THE PLANS. |
| 3 | THESE VALUES WILL BE PROVIDED IN TABLES 2 AND/OR 3 |
| 4 | PASSIVE RESISTANCE SHALL NOT BE CONSIDERED IN EVALUATION OF SLIDING RESISTANCE. NO SHEAR KEYS NOR DOWELS WILL BE PERMITTED. |

NOTE: IT SHOULD BE NOTED THAT AN ANGLE OF INTERNAL FRICTION AS HIGH AS 34 DEGREES MAY BE USED IF SELECT GRANULAR FILL IS PLACED WITHIN THE ZONE LOCATED ABOVE A PLANE EXTENDING AT A 45 DEGREE ANGLE FROM THE HEEL OF THE WALL. HOWEVER, IF MATERIAL EXCAVATED FROM NEARBY CUTS IS TO BE USED THE LOWER INSITU FRICTION ANGLE SHOULD BE USED.

TABLE 3-FOUNDATION PARAMETERS AND REQUIREMENTS FOR OTHER GRAVITY OR SEMI-GRAVITY WALLS, IS ON "RETAINING WALL DETAILS SHEET(S)".

| LIST OF SPECIAL PROVISIONS | PROV. NO. | LAST REV. DATE |
|---|---|---|
| RETAINING WALLS | 624 | 05-18-15 |

### OTHER DESIGN REQUIREMENTS

THE WALL SHALL HAVE A DRAINAGE GUTTER AT THE TOP DESIGNED TO CARRY SURFACE RUNOFF TO EITHER OR BOTH ENDS OF WALLS. DETAILS OF THIS DRAINAGE FEATURE SHALL BE PROVIDED IN WALL DESIGNER/CONTRACTOR'S WALL DESIGN PLANS.

IF A CONCRETE CANTILEVER WALL IS USED, THE WALL DESIGNER MUST PROVIDE FOR A DRAINAGE LAYER BEHIND THE WALL STEM WITH ADEQUATE DRAINAGE PROVIDED VIA WEEP HOLES.

STATE OF TENNESSEE
DEPARTMENT OF TRANSPORTATIO

GEOTECHNICAL DESIGN NOTES AND REQUIREMENTS
RETAINING WALLS 1,2,3,4&
STATE ROUTE 115
MALONEY RD
TO WOODSON DR
KNOX COUNTY
2016

U-XXX-XXX

0/22/2015 1:23:03 PM
:\Users\JJ00296\Documents\WORK\RecentWork\KnoxSR115\Walls\KnoxSR115RetWalls100241-04.dgn

| TYPE | YEAR | PROJECT NO. | SHEET NO |
|---|---|---|---|
| CONST. | 2016 | NH-115(54) | |
| | | | |
| | | | |
| | | | |

CONST. NO. 47026-3279-14

## ACCEPTABLE WALL TYPES

THE RETAINING WALL(S) SHALL BE ONE OF THE WALL TYPES AS LISTED BELOW OR ON FORTHCOMING RETAINING WALL DETAILS SHEET(S). FOR RETAINING WALL SYSTEMS LISTED AS BIN WALL, CRIB WALL, PRECAST GRAVITY WALL, MSE (EITHER SEGMENTAL PANEL OR MODULAR BLOCK) AND GROUND ANCHOR WALL; THE SPECIFIC WALL SYSTEM SUPPLIER/INSTALLER SHALL BE ONE OF THOSE LISTED AS PRE-APPROVED IN QPL 38.

PRE-CAST GRAVITY WALL
CAST-IN-PLACE CONCRETE GRAVITY WALL
CAST-IN-PLACE CONCRETE CANTILEVER WALL

### RETAINING WALL DESIGN NOTES

UNLESS SPECIFICALLY STATED OTHERWISE IN THE CONTRACT PLANS, THE BIDDING FOR, THE DESIGN OF AND THE CONSTRUCTION OF RETAINING WALLS SHOWN IN THE PLANS SHALL BE GOVERNED BY THE TENNESSEE DEPARTMENT OF TRANSPORTATION SPECIAL PROVISION 624 REGARDING RETAINING WALLS. THIS SPECIAL PROVISION SHALL BE CONSIDERED AS ONE OF THOSE DOCUMENTS WHICH THE BIDDER/CONTRACTOR HAS EXAMINED AND MADE HIMSELF FAMILIAR WITH AS DESCRIBED IN SECTION 102.04 – EXAMINATION OF THE SITE, THE WORK, THE PLANS, AND THE SPECIFICATIONS IN THE TDOT STANDARD SPECIFICATIONS FOR ROAD AND BRIDGE CONSTRUCTION.

EXCAVATION FOR THE WALL AND/OR ITS FOOTING SHALL NOT BE ACCOMPLISHED UNTIL THE CONTRACTOR HAS SUBMITTED WALL DESIGNS AND CALCULATIONS AND HAS BEEN ISSUED AN APPROVED SET OF WALL PLANS AND HAS LABOR AND MATERIAL RESOURCES AVAILABLE TO BEGIN AND CONTINUE WALL CONSTRUCTION IMMEDIATELY AFTER EXCAVATION.

THIS WALL SHALL BE DESIGNED IN ACCORDANCE WITH LRFD DESIGN PROCEDURES AND REQUIREMENTS AS DESCRIBED IN 1) AASHTO LRFD BRIDGE DESIGN SPECIFICATIONS, 2014 AND INTERIMS.

FOR PROPRIETARY WALL SYSTEMS THAT HAVE BEEN APPROVED AS SHOWN IN QPL 38, THE WALL DESIGNER SHALL BE RESPONSIBLE FOR PROVIDING WALL DESIGNS INCORPORATING MATERIALS AND COMPONENTS (I.E. REINFORCEMENT CONNECTION DEVICES, SPECIFIC MANUFACTURER AND PROPERTIES OF GEOGRID) AS WAS ORIGINALLY SUBMITTED AND APPROVED BY TDOT, IF A MATERIAL AND/OR COMPONENT OF THE WALL SYSTEM HAVE BEEN MODIFIED FROM THE ORIGINALLY APPROVED SYSTEM, A WALL DESIGN AND SET OF PLANS AND CALCULATIONS FOR THIS WALL SYSTEM CANNOT BE SUBMITTED FOR REVIEW AND APPROVAL UNTIL THE WALL SYSTEM DESIGNER WHO ORIGINALLY SUBMITTED THE WALL SYSTEM FOR APPROVAL BY TDOT SUBMITS A REQUEST FOR RE-APPROVAL UTILIZING THE MODIFIED ELEMENTS OF THE WALL. THIS SUBMITTAL DOES NOT GUARANTEE APPROVAL OF THE MODIFIED SYSTEM. IF THIS RE-APPROVAL PROCESS DOES NOT MEET THE CONTRACTOR'S SCHEDULE OR IF THE MODIFIED SYSTEM IS NOT APPROVED, THE CONTRACTOR/WALL DESIGNER SHALL PROVIDE A WALL DESIGN FOR ONE OF THE APPROVED SYSTEMS AT NO CHANGE IN CONTRACT PRICE FOR THE RETAINING WALL AND NO CHANGE IN PROJECT SCHEDULE REQUIREMENTS WILL BE ALLOWED.

THE WALL DESIGNER SHALL PROVIDE RETAINING WALL PLANS, DETAILS AND CALCULATIONS AS REQUIRED BY SPECIAL PROVISION 624 AND AS REQUIRED HEREIN.

- THE WALL DESIGNER SHALL UTILIZE THE GEOTECHNICAL PARAMETERS AND RESISTANCE FACTORS AS PROVIDED FOR EACH PROJECT RETAINING WALL ON THE WALL CONCEPT SHEET AND RELATED RETAINING WALL SHEETS TO PREPARE AND SUBMIT DESIGN CALCULATIONS. LOAD FACTORS AND OTHER PERTINENT DESIGN REQUIREMENTS PROVIDED IN AASHTO LRFD BRIDGE DESIGN SPECIFICATIONS, 2014 AND INTERIMS SHALL BE USED FOR NON-MSE WALLS AND PUBLICATION FHWA-NHI-10-024/FHWA GEC 011, DESIGN AND CONSTRUCTION OF MECHANICALLY STABILIZED EARTH WALLS AND REINFORCED SOIL SLOPES, NOVEMBER 2009 FOR MSE WALLS.
- CALCULATIONS FOR BOTH INTERNAL AND EXTERNAL STABILITY (SLIDING, ECCENTRICITY, AND BEARING CAPACITY-GLOBAL STABILITY AND SETTLEMENT BEING THE EXCEPTIONS) SHALL BE PROVIDED FOR EACH CRITICAL WALL SECTION WHICH DEMONSTRATES THE REQUIRED CAPACITY TO DEMAND RATIO OF 1.0 IS MET UTILIZING THE DESIGN PARAMETERS PROVIDED. FOR MSE WALLS, THE WALL DESIGNER MUST ADJUST THE REINFORCEMENT LENGTHS BEYOND THOSE MINIMUM REQUIRED LENGTHS, IF REQUIRED, TO MEET BOTH INTERNAL AND EXTERNAL REQUIREMENTS. THE WALL DESIGNER/CONTRACTOR PLANS MUST INCLUDE ANY FOUNDATION IMPROVEMENTS AS REQUIRED HEREIN ON THE WALL DESIGNER/CONTRACTOR'S WALL ELEVATION VIEWS AND ANY CROSS-SECTIONAL DETAIL DRAWINGS.
- UNLESS OTHERWISE STATED, THE WALL DESIGNER CAN ASSUME THAT MINIMUM GLOBAL STABILITY AND SETTLEMENT CRITERIA IS ACHIEVED WITH A WALL DESIGN MEETING OTHER MINIMUM EXTERNAL STABILITY REQUIREMENTS AND ASSUMING WALL FOUNDATION CONDITIONS ARE MET. WHILE THE WALL DESIGNER'S DESIGN MUST DEMONSTRATE COMPLIANCE WITH EXTERNAL STABILITY REQUIREMENTS AS DISCUSSED ABOVE, THE WALL DESIGNER MAY PROVIDE CERTIFICATION (BY SIGNING AND STAMPING BY PROFESSIONAL ENGINEER REGISTERED IN STATE OF TENNESSEE) OF THE WALLS PLANS AND CALCULATIONS "FOR INTERNAL STABILITY ONLY".

### NOTE REGARDING CONSTRUCTION SLOPES

THE CONTRACTOR SHALL BE RESPONSIBLE FOR MAKING THE EXCAVATION IN ACCORDANCE WITH OSHA AND OTHER APPLICABLE STATE AND LOCAL REGULATIONS REGARDING CONSTRUCTION SLOPES AND TRENCHES. IN ADDITION TO FOLLOWING APPLICABLE REGULATORY REQUIREMENTS, AS A MINIMUM REQUIREMENT, ALL TEMPORARY CONSTRUCTION SLOPES SHALL BE PLACED AT A MAXIMUM OF A 1:1 SLOPE IN SOIL AND SHALL NOT BE LEFT OPEN WITHOUT SHORING FOR ANY LONGER THAN ABSOLUTELY NECESSARY. THE CONTRACTOR BUILDING THE WALL SHALL ENSURE THAT THESE TEMPORARY BACK SLOPES ARE NOT AND DO NOT BECOME UNSTABLE. IF SLOPE IS UNSTABLE, BECOMES UNSTABLE, IS CUT STEEPER THAT A 1:1 SLOPE OR IS UNACCEPTABLE FOR ANOTHER REASON, THEN TEMPORARY SHORING SHALL BE USED. ANY UNUSUAL SOIL CONDITIONS OTHER THAN THOSE ASSUMED SHOULD BE REPORTED TO THE PROJECT ENGINEER.

TABLE 1–DESIGN REQUIREMENTS AND PARAMETERS

| DESCRIPTION | PRECAST GRAVITY WALLS | CIP WALLS | NOTE |
|---|---|---|---|
| DESIGN LIFE | 75 YEARS | 75 YEARS | |
| SEISMIC ACCELERATION COEFFICIENT (As) | 0.190 | 0.190 | |
| EFFECTIVE (DRAINED) FRICTION ANGLE | | | |
| RETAINED BACKFILL–UNCLASSIFIED SITE OR BORROW SOIL | 28° | 28° | |
| RETAINED BACKFILL–SELECT BACKFILL | 34° TO MAX 40° | 34° TO MAX 40° | 1 |
| REINFORCED BACKFILL | NOT APPLICABLE | NOT APPLICABLE | 1 |
| UNIT WEIGHT | | | |
| UNCLASSIFIED SITE OR BORROW SOIL | 1920 kg PER CUBIC METER | 1920 kg PER CUBIC METER | |
| SELECT BACKFILL MATERIAL | VARIES | VARIES | 1A |
| DESIGN BASIS | | | |
| COEFFICIENT OF SLIDING FRICTION | SEE TABLE 3 | SEE TABLE 3 | 3 |
| NOMINAL BEARING RESISTANCE | SEE TABLE 3 | SEE TABLE 3 | 3 |
| LIMITING ECCENTRICITY | B/3 (SOIL), 9B/20 (ROCK) | B/3 (SOIL), 9B/20 (ROCK) | |
| RESISTANCE FACTORS | | | |
| SLIDING–STATIC | 0.8 | 1.0 | 4 |
| SLIDING–COMBINED STATIC+EARTHQUAKE | 0.8 | 0.9 | 4 |
| BEARING–STATIC | 0.55 | 0.55 | 5 |
| BEARING–COMBINED STATIC+EARTHQUAKE | 0.8 | 0.8 | |

TABLE 1.1
NOTES FOR TABLE 1

| NO. | NOTE |
|---|---|
| 1 | A MAXIMUM FRICTION ANGLE OF 34 DEGREES CAN BE ASSUMED FOR MATERIAL MEETING SPECIFICATIONS IN SECTION F, PART1, AND ITEM E OF TENNESSEE DEPARTMENT OF TRANSPORTATION SPECIAL PROVISION 624 REGARDING RETAINING WALLS. A HIGHER FRICTION ANGLE THAN 34 DEGREES CAN BE UTILIZED IF THE CONTRACTOR SUBMITS INDEPENDENT TESTING AND IT IS VERIFIED BY TDOT. HOWEVER, IN NO CASE SHALL THE FRICTION ANGLE FOR ANALYSIS EXCEED 40 DEGREES. |
| 1A | SELECT BACKFILL UNIT WEIGHT TO BE DETERMINED BY CONTRACTOR/DESIGNER DEPENDING ON ACTUAL BACKFILL MATERIAL USED. SELECT BACKFILL IS DEFINED AS MATERIAL MEETING SPECIFICATIONS IN SECTION F, PART 1, AND ITEM E OF TENNESSEE DEPARTMENT OF TRANSPORTATION SPECIAL PROVISION 624 REGARDING RETAINING WALLS. IN ORDER TO UTILIZE $\phi$ FOR SELECT BACKFILL DESIGN, SELECT BACKFILL MUST BE PLACED FOR A MINIMUM ZONE FORMED BY A 1:1 SLOPE FROM 2 FEET BEHIND THE BOTTOM OF BACK OF WALL FOOTING OR REINFORCED SOIL ZONE FOR MSE WALLS UP TO FINISHED GRADE. |
| 2 | H IS DESIGN HEIGHT OF THE WALL AND IS DEFINED AS THE DIFFERENCE IN ELEVATION BETWEEN THE FINISHED GRADE AT THE TOP OF THE WALL AND THE TOP OF LEVELING PAD OR BOTTOM OF FOOTING FOR NON-MSE WALLS. THE TOP OF THE LEVELING PAD SHALL ALWAYS BE BELOW THE MINIMUM EMBEDMENT REFERENCE LINE AS INDICATED ON THE PLANS FOR THAT LOCATION. THE LENGTH OF THE SOIL REINFORCEMENT, L, IS MEASURED FROM THE BACKFACE OF THE WALL FACING UNIT. IN CASE OF GRID TYPE REINFORCEMENTS THE LENGTH OF THE SOIL REINFORCEMENT IS MEASURED FROM THE BACKFACE OF THE WALL FACING UNIT TO THE LAST FULL TRANSVERSE MEMBER. FOR MODULAR BLOCKFACING UNITS, THE TOTAL LENGTH OF THE REINFORCEMENT, Br AS MEASURED FROM THE FRONT FACE OF THE WALL IS THE LENGTH L AS DEFINED ABOVE PLUS THE WIDTH OF THE MODULAR BLOCK UNIT (THE HORIZONTAL DIMENSION OF THE BLOCK UNIT MEASURED PERPENDICULAR TO THE WALL FACE). |
| 2A | WALL DESIGNER MUST ADJUST THE REINFORCEMENT LENGTHS BEYOND THOSE MINIMUM REQUIRED LENGTHS, IF REQUIRED, TO MEET BOTH INTERNAL AND EXTERNAL STABILITY REQUIREMENTS. MINIMUM REINFORCEMENT LENGTHS MAY BE REQUIRED FOR GLOBAL STABILITY. THIS REQUIREMENT WILL BE SHOWN IN THE PLANS. |
| 3 | THESE VALUES WILL BE PROVIDED IN TABLES 2 AND/OR 3 |
| 4 | PASSIVE RESISTANCE SHALL NOT BE CONSIDERED IN EVALUATION OF SLIDING RESISTANCE. NO SHEAR KEYS NOR DOWELS WILL BE PERMITTED. |

NOTE: IT SHOULD BE NOTED THAT AN ANGLE OF INTERNAL FRICTION AS HIGH AS 34 DEGREES MAY BE USED IF SELECT GRANULAR FILL IS PLACED WITHIN THE ZONE LOCATED ABOVE A PLANE EXTENDING AT A 45 DEGREE ANGLE FROM THE HEEL OF THE WALL. HOWEVER, IF MATERIAL EXCAVATED FROM NEARBY CUTS IS TO BE USED THE LOWER INSITU FRICTION ANGLE SHOULD BE USED.

TABLE 3–FOUNDATION PARAMETERS AND REQUIREMENTS FOR OTHER GRAVITY OR SEMI-GRAVITY WALLS

| STATION LIMITS | FOUNDATION BEARING CONDITION REQUIREMENT | NOMINAL BEARING RESISTANCE (kPa) | COEFFICIENT OF SLIDING FRICTION |
|---|---|---|---|
| 11+330.00 TO 11+520.00 | 0.610 METER OF NO. 4 STONE | 288 (6,000psf) | 0.60 |
| | | | |

| LIST OF SPECIAL PROVISIONS | PROV. NO. | LAST REV. DATE |
|---|---|---|
| RETAINING WALLS | 624 | 05-18-15 |

### OTHER DESIGN REQUIREMENTS

THE WALL SHALL HAVE A DRAINAGE GUTTER AT THE TOP DESIGNED TO CARRY SURFACE RUNOFF TO EITHER OR BOTH ENDS OF WALLS. DETAILS OF THIS DRAINAGE FEATURE SHALL BE PROVIDED IN WALL DESIGNER/CONTRACTOR'S WALL DESIGN PLANS.

IF A CONCRETE CANTILEVER WALL IS USED, THE WALL DESIGNER MUST PROVIDE FOR A DRAINAGE LAYER BEHIND THE WALL STEM WITH ADEQUATE DRAINAGE PROVIDED VIA WEEP HOLES.

STATE OF TENNESSEE
DEPARTMENT OF TRANSPORTATIO

GEOTECHNICAL DESIGN NOTES AND REQUIREMENTS
RETAINING WALL NO. 5
STATE ROUTE 115
MALONEY RD
TO WOODSON DR
KNOX COUNTY
2016

U-XXX-XXX

VER. 09/25/2015

0/7/2015 8:25:25 AM
C:\Users\JJ0296\Documents\WORK\RecentWork\KnoxSRIIS\Walls\KnoxSRIISRetWalls0024I-04.dgn

| TYPE | YEAR | PROJECT NO. | SHEET NO. |
|---|---|---|---|
| CONST. | 2015 | 47026-3279-14 | ---- |
| | | | |
| | | | |
| | | | |

## GEOTECHNICAL NOTES

1. REFERENCES TO THE GEOTECHNICAL REPORT ARE FOR: GEOTECHNICAL RETAINING WALL REPORT PROPOSED SR 115 WIDENING RAMPS B AND COLLECTOR 6, AMEC FOSTER WHEELER FILE NO. 7681-15-002.
2. THE CONTRACTOR SHALL BE RESPONSIBLE FOR MAKING SAFE EXCAVATIONS IN ACCORDANCE WITH OSHA AND OTHER APPLICABLE STATE AND LOCAL REGULATIONS REGARDING CONSTRUCTION SLOPES AND TRENCHES. CONTRACTOR SHALL USE TOP-DOWN CONSTRUCTION TECHNIQUES TO INSTALL TIEBACK WALLS, MINIMIZE NECESSARY TEMPORARY CUTS, AND PREPARE ACCESS IN A MANNER TO REDUCE GROUND DISTURBANCE. SITE SOILS ARE HIGHLY ERODIBLE, SO, CONTRACTOR SHALL PROVIDE EROSION PROTECTION PRIOR TO ALL GROUND DISTURBANCES, AND IMMEDIATELY REVEGETATE EXPOSED SOIL. DO NOT LEAVE TEMPORARY SLOPES EXPOSED WITHOUT SHORING, EROSION PROTECTION, AND/OR REVEGETATION. PROVIDE TEMPORARY SHORING IF SLOPES BECOME UNSTABLE, ERODE, ARE STEEPER THAN A 2:1, OR ARE UNACCEPTABLE FOR ANOTHER REASON. REPORT ANY UNUSUAL SOIL/ROCK CONDITIONS TO PROJECT ENGINEER.

## SOIL DESCRIPTIONS

(A) — SOIL MATERIAL/FILL

SOIL MATERIAL IS PREDOMINANTLY MADE UP OF NATURALLY OCCURRING MINERAL PARTICLES WHICH ARE FAIRLY READILY SEPARATED INTO RELATIVELY SMALL PIECES, AND IN WHICH THE MASS MAY CONTAIN AIR, OR ORGANIC MATERIALS. THIS MATERIAL MAY CONTAIN ROCK PIECES IN THE FORM OF DISCONNECTED SLABS, LENSES, OR BOULDERS OF LESS THAN APPROXIMATELY 0.5 CUBIC METERS. THE MAIN SOIL GROUPS CONSIST OF CLAY, SILT, SAND, GRAVEL, COBBLES, BOULDERS (LESS THAN 0.5 CUBIC METERS VOLUME) OR A COMBINATION OF ANY OF THE CONSTITUENTS. FOR CONSTRUCTION PURPOSES, THIS MATERIAL WOULD TYPICALLY BE CONSIDERED TO BE EXCAVATABLE BY CONVENTIONAL EXCAVATION MACHINERY SUCH AS PANS, TRACK HOES, OR FRONT END EXCAVATORS/LOADERS. THIS MATERIAL WOULD HAVE A SHRINK FACTOR AS GIVEN IN THE SHRINK FACTORS SHOWN IN SECTION 2-145.10 OF THE DESIGN GUIDELINES OR AS RECOMMENDED BY THE GEOTECHNICAL ENGINEERING SECTION OF THE MATERIALS AND TEST DIVISION.

(B) — SOLID ROCK MATERIAL

SOLID ROCK MATERIAL IS NATURALLY OCCURRING MATERIAL COMPOSED OF MINERAL PARTICLES SO FIRMLY BONDED TOGETHER THAT RELATIVELY GREAT EFFORT IS REQUIRED TO SEPARATE THE PARTICLES (I.E. BLASTING OR HEAVY CRUSHING FORCES). FOR CONSTRUCTION PURPOSES, THIS MATERIAL WOULD TYPICALLY HAVE TO BE BLASTED TO SEPARATE INTO PIECES SMALL ENOUGH TO LOAD AND TRANSPORT ON EARTH MOVING TRUCKS AND WHICH WHEN SUBJECTED TO PROPER PRE-SPLIT AND PRODUCTION BLASTING WOULD RESULT IN A UNIFORM STABLE ROCKCUT FACE. NOTE THAT THIS MATERIAL WOULD NOT BY DEFINITION NECESSARILY BE A PROVEN SOURCE OF ANY ROCK TYPE AGGREGATE SUCH AS SOLID ROCK, GRADED SOLID ROCK, RIP RAP, OR OTHER ROCK AGGREGATE CONSTRUCTION PRODUCTS. THIS MATERIAL WOULD HAVE A SIGNIFICANT SWELL FACTOR AS GIVEN IN SWELL FACTORS SHOWN IN SECTION 2-145.10 OF THE DESIGN GUIDELINES OR AS RECOMMENDED BY THE GEOTECHNICAL ENGINEERING SECTION OF THE MATERIALS AND TEST DIVISION.

(C) — SOFT ROCK OR DEGRADABLE ROCK

THIS MATERIAL IS NATURALLY OCCURRING MATERIAL COMPOSED OF MINERAL PARTICLES THAT ARE SO FIRMLY BONDED SUCH THAT THEY ARE NOT FAIRLY READILY SEPARATED INTO SMALL PIECES YET HAS SUCH RELATIVELY LOW BONDING STRENGTH THAT WOULD ALLOW FOR SEPARATING INTO SMALL PIECES THROUGH MODERATE TO HEAVY CRUSHING FORCES. FOR CONSTRUCTION PUPOSES, THIS MATERIAL WOULD HAVE TO BE SUBJECTED TO RIPPING TYPE EQUIPMENT, HOE RAMS, OR RUGGED USE OF A LARGE BULLDOZER IN ORDER TO SEPARATE THE MATERIAL SUCH THAT IT CAN BE READILY LOADED INTO EARTH MOVING TRUCKS. THESE MATERIALS WOULD TYPICALLY BE SHALES, CLAYSTONES, SILTSTONES, WEATHERED SANDSTONES, WEATHERED SCHIST AND WEATHERED GNEISS. THIS MATERIAL WOULD HAVE A RELATIVELY SMALL SHRINK OR SWELL FACTOR DEPENDING ON THE TYPE OF MATERIAL AND THE DEGREE OF WEATHERING, DISINTEGRATION, OR DEGRADATION.

(D) — TRANSITIONAL MATERIAL

THIS MATERIAL IS COMPRISED OF A COMBINATION OF SOIL AND ROCK (MATERIAL A, B, AND C AS DEFINED IN SECTION 4-230.02 OF THE TDOT ROADWAY DESIGN GUIDELINES) OCCURRING IN EITHER NON-UNIFORM INTERBEDDED LAYERS OF THE ABOVE MATERIALS (I.E. SHALE MATERIAL WITH REALTIVELY THIN LAYERS OF SOLID ROCK SUCH AS HARD LIMESTONE) OR ERRATIC LOCALIZED CHANGES OF MATERIAL TYPES BOTH LATERALLY AND WITH DEPTH (SUCH AS A GEOLOGIC FORMATION RESULTING IN PINNACLED ROCK COLUMNS, FLOATING BOULDERS OR LENSES INTERCALATED WITH CLAY SOIL, A CMMON OCCURRENCE IN CERTAIN REGIONS OF TENNESSEE). FOR CONSTRUCTION PURPOSES, THIS MATERIAL MAY HAVE TO BE EXCAVATED USING A COMBINATION OF EXCAVATION METHODS SUCH AS BLASTING OF ROCK PINNACLES, LAYERS OF BOULDERS ALONG WITH RIPPING OF WEATHERED ROCK AND EXCAVATING OF SOIL WITH TRACK HOES OR LOADERS ALL WITHIN A LOCALIZED AREA. THIS MATERIAL WOULD NOT BE SUITABLE FOR THE USE OF EXCAVATING PAN TYPE EQUIPMENT.

## GEOTECHNICAL DRAWING LEGEND

### PLAN SYMBOLS

B-84 (0.7) — BORING LOCATION AND NUMBER WITH DRILL DEPTH (NO REFUSAL)

B-84 (0.7) — BORING LOCATION AND NUMBER WITH DRILL DEPTH (REFUSED)

B-84 (0.7 / 10.0) — BORING LOCATION AND NUMBER WITH DEPTH TO REFUSAL (ABOVE LINE) AND BOTTOM OF HOLE DEPTH (BELOW LINE)

### PROFILE LINES

PROPOSED GROUND LINE AT PROJECT CENTERLINE

EXISTING GROUND LINE AT PROJECT CENTERLINE

UNKNOWN TOP OF SOUND ROCK

ESTIMATED TOP OF ROCK

### BORING PROFILES

(PROJ. 19.5m R) — OFFSET FROM PROJECT CENTERLINE

B-10 — HOLE NUMBER

622.0 — TOP OF HOLE ELEVATION

MATERIAL DESCRIPTIONS, SEE LEGEND BELOW

AR — REFUSAL

### SOIL DESCRIPTIONS

(A) SOIL MATERIAL

(B) SOLID ROCK MATERIAL

(C) SOFT ROCK OR DEGRADABLE ROCK

(D) TRANSITIONAL MATERIAL

### MATERIAL DESCRIPTION PATTERNS

TOPSOIL

FILL (MADE GROUND)

LOW PLASTICITY CLAY

LOW PLASTICITY SANDY CLAY

SILTY SAND

SILT

SANDY SILT

SANDSTONE

OPEN CAVITY

AUGERED (NOT SAMPLED)

NO RECOVERY

BT — BORING TERMINATED

AR — AUGER REFUSAL

## GENERAL NOTES (GEOTECHNICAL):

1. ROADWAY ALIGNMENT BASED ON DATA PROVIDED BY VAUGHN AND MELTON CONSULTING ENGINEERS.
2. GROUNDLINE PROFILES BASED ON DATA PROVIDED BY VAUGHN AND MELTON CONSULTING ENGINEERS.
3. BOREHOLE ELEVATIONS PROVIDED BY VAUGHN AND MELTON SURVEYORS.
4. REPORT OF SUBSURFACE EXPLORATION AND GEOTECHNICAL ENGINEERING STUDY FOR GEOTECHNICAL RETAINING WALL REPORT PROPOSED SR 115 WIDENING RAMPS B AND COLLECTOR 6, AMEC FOSTER WHEELER FILE NO. 7681-15-002 AVAILABLE FROM AMEC FOSTER WHEELER, ENVIRONMENT & INFRASTRUCTURE, INC. NASHVILLE, TENNESSEE (615-333-0630).
6. CROSS SECTIONS PROVIDED BY VAUGHN AND MELTON CONSULTING ENGINEERS.

**PRELIMINARY**

**PLANS**

TENNESSEE METRIC D.O.T.

COORDINATES ARE NAD/83(1995), ARE DATUM ADJUSTED BY THE FACTOR OF 1.000 AND TIED TO THE TGRN. ALL ELEVATIONS ARE REFERENCED TO THE NAVD 1988.

STATE OF TENNESSEE
DEPARTMENT OF TRANSPORTATION

GEOTECHNICAL NOTES

SCALE: AS NOTED

9/9/2015
R:_Infrastructure Project Files\2015 Infra Projects\768I-15-002 ALCOA Hwy (SR 115) WALLS 7 AND 8\06 - CADD\00.GEOTECHNICAL_NOTES.sht

| TYPE | YEAR | PROJECT NO. | SHEET NO. |
|---|---|---|---|
| CONST. | 2015 | 47026-3279-14 | ---- |

amec foster wheeler — GEOTECHNICAL BRANCH, NASHVILLE, TENNESSEE

LOG OF BORING B-01, SHEET 1 OF 2

PROJECT: ALCOA HIGHWAY WIDENING (SR-115) RETAINING WALLS 7 AND 8 — DRILLER: TRI-STATE DRILLING
PROJECT NO.: 7681-15-002 — ON-SITE REP.: WDS
BORING NO. / LOCATION: STA 5+716, 10.8 m Left — DRY ON COMPLETION ?: YES
DATE: September 1, 2015 — SURFACE ELEV.: 919.2 FT. 280.2 M
REFUSAL: DEPTH NA FT. M — ELEV. FT. M
SAMPLED: 30.0 FT. 9.1 M
TOP OF ROCK: DEPTH NA FT. M — ELEV. FT. M
BEGAN CORING: DEPTH NA FT. M — ELEV. FT. M
FOOTAGE CORED (LF): 0.0 FT. 0.0 M
BOTTOM OF HOLE: DEPTH 30.0 FT. 9.1 M — ELEV. 889.2 FT. 271.0 M
BORING ADVANCED BY: — POWER AUGERING: X — WASHBORING:

WATER LEVEL DATA (IF APPLICABLE): COMPLETION: DEPTH FT. M, ELEV. FT. M; AFTER 24 HRS.: DEPTH FT. M, ELEV. FT. M; LDW AT: DEPTH FT. M, ELEV. FT. M

| STRATUM DEPTH FT. | M. | SAMPLE DEPTH FROM FT. | M. | TO FT. | M. | SAMPLE OR RUN NO. | SAMPLE TYPE | SPLE/CORE RECOV'D (IN.) | SPT VALUES 6" | 6" | 6" | N | STRATUM DESCRIPTION |
|---|---|---|---|---|---|---|---|---|---|---|---|---|---|
| | | 0.0 | 0.00 | 0.5 | 0.15 | | A | | | | | | TOPSOIL/ VEGETATION |
| | | 0.5 | 0.15 | 1.0 | 0.30 | | | | | | | | |
| | | 1.0 | 0.30 | | | S-1 | SS | 14 | 5 | 7 | 6 | 13 | Clay, silty, sandy, brown (moist)(Stiff) |
| 2.5 | 0.76 | | | 2.5 | 0.76 | | A | | | | | | |
| | | 2.5 | 0.76 | | | | | | | | | | |
| | | | | 3.5 | 1.07 | | | | | | | | |
| | | 3.5 | 1.07 | | | | | | | | | | |
| | | | | | | S-2 | SS | 16 | 6 | 6 | 8 | 14 | DO1, reddish-brown |
| 5.0 | 1.52 | | | 5.0 | 1.52 | | A | | | | | | |
| | | 5.0 | 1.52 | | | | | | | | | | |
| | | | | 6.0 | 1.83 | | | | | | | | |
| | | 6.0 | 1.83 | | | | | | | | | | |
| | | | | | | S-3 | SS | 8 | 3 | 5 | 6 | 11 | DO2, Root at tip shaved soil |
| 7.5 | 2.29 | | | 7.5 | 2.29 | | A | | | | | | |
| | | 7.5 | 2.29 | | | | | | | | | | |
| | | | | 8.5 | 2.59 | | | | | | | | |
| | | 8.5 | 2.59 | | | | | | | | | | |
| | | | | | | S-4 | SS | 18 | 5 | 6 | 9 | 15 | DO2 |
| 10.0 | 3.05 | | | 10.0 | 3.05 | | | | | | | | |
| | | 10.0 | 3.05 | | | | | | | | | | |
| | | | | | | ST-1 | ST | 0 | | | | | NO USEABLE RECOVERY |
| | | | | 12.0 | 3.66 | | | | | | | | |
| | | 12.0 | 3.66 | | | | | | | | | | |
| | | | | 13.5 | 4.11 | | | | | | | | |
| 12.5 | 3.81 | | | | | | | | | | | | |
| | | 13.5 | 4.11 | | | S-5 | SS | 16 | 5 | 7 | 8 | 15 | DO2 to yellowish-brown |
| 15.0 | 4.57 | | | | | | | | | | | | |
| | | | | | | | A | | | | | | |
| 17.5 | 5.33 | | | | | | | | | | | | |
| | | | | 18.5 | 5.64 | | | | | | | | |
| | | 18.5 | 5.64 | | | | | | | | | | |
| | | | | 20.0 | 6.10 | S-6 | SS | 4 | 3 | 5 | 3 | 8 | DO5, Med Stiff |
| 20.0 | 6.10 | | | | | | | | | | | | |

REMARKS: Continued On Page 2.

amec foster wheeler — GEOTECHNICAL BRANCH, NASHVILLE, TENNESSEE

LOG OF BORING B-2, SHEET 1 OF 2

PROJECT: ALCOA HIGHWAY WIDENING (SR-115) RETAINING WALLS 7 AND 8 — DRILLER: TRI-STATE DRILLING
PROJECT NO.: 7681-15-002 — ON-SITE REP.: WDS
BORING NO. / LOCATION: STA 5+725.00 — DRY ON COMPLETION ?: YES
DATE: September 2, 2015 — SURFACE ELEV.: 923.2 FT. 281.4 M
REFUSAL: DEPTH NA FT. M — ELEV. FT. M
SAMPLED: NA FT. M
TOP OF ROCK: DEPTH NA FT. M — ELEV. FT. M
BEGAN CORING: DEPTH NA FT. M — ELEV. FT. M
FOOTAGE CORED (LF): 0.0 FT. 0.0 M
BOTTOM OF HOLE: DEPTH 35.0 FT. 10.7 M — ELEV. 888.2 FT. 270.7 M
BORING ADVANCED BY: — POWER AUGERING: X — WASHBORING:

WATER LEVEL DATA (IF APPLICABLE): COMPLETION: DEPTH FT. M, ELEV. FT. M; AFTER 24 HRS.: DEPTH FT. M, ELEV. FT. M; LDW AT: DEPTH FT. M, ELEV. FT. M

| STRATUM DEPTH FT. | M. | SAMPLE DEPTH FROM FT. | M. | TO FT. | M. | SAMPLE OR RUN NO. | SAMPLE TYPE | SPLE/CORE RECOV'D (IN.) | SPT VALUES 6" | 6" | 6" | N | STRATUM DESCRIPTION |
|---|---|---|---|---|---|---|---|---|---|---|---|---|---|
| | | 0.0 | 0.00 | 0.5 | 0.15 | | A | | | | | | TOPSOIL/ VEGETATION |
| | | 0.5 | 0.15 | | | | | | | | | | |
| 2.5 | 0.76 | | | | | | | | | | | | |
| 5.0 | 1.52 | | | | | | | | | | | | |
| 7.5 | 2.29 | | | | | | | | | | | | |
| 10.0 | 3.05 | | | | | | A | | | | | | Clay, silty, sandy, reddish-brown to yellowish-brown (Moist) |
| 12.5 | 3.81 | | | | | | | | | | | | |
| 15.0 | 4.57 | | | | | | | | | | | | |
| 17.5 | 5.33 | | | | | | | | | | | | |
| | | | | 20.0 | 6.10 | | | | | | | | |
| 20.0 | 6.10 | | | | | | | | | | | | |

REMARKS: Continued On Page 2.

amec foster wheeler — GEOTECHNICAL BRANCH, NASHVILLE, TENNESSEE

LOG OF BORING B-03, SHEET 1 OF 2

PROJECT: ALCOA HIGHWAY WIDENING (SR-115) RETAINING WALLS 7 AND 8 — DRILLER: TRI-STATE DRILLING
PROJECT NO.: 7681-15-002 — ON-SITE REP.: WDS
BORING NO. / LOCATION: STA 5+742, 12.6 m Left — DRY ON COMPLETION ?: YES
DATE: September 2, 2015 — SURFACE ELEV.: 926.5 FT. 282.4 M
REFUSAL: DEPTH NA FT. M — ELEV. FT. M
SAMPLED: 35.0 FT. 10.7 M
TOP OF ROCK: DEPTH NA FT. M — ELEV. FT. M
BEGAN CORING: DEPTH NA FT. M — ELEV. FT. M
FOOTAGE CORED (LF): 0.0 FT. 0.0 M
BOTTOM OF HOLE: DEPTH 35.0 FT. 10.7 M — ELEV. 891.5 FT. 271.7 M
BORING ADVANCED BY: — POWER AUGERING: X — WASHBORING:

WATER LEVEL DATA (IF APPLICABLE): COMPLETION: DEPTH FT. M, ELEV. FT. M; AFTER 24 HRS.: DEPTH FT. M, ELEV. FT. M; LDW AT: DEPTH FT. M, ELEV. FT. M

| STRATUM DEPTH FT. | M. | SAMPLE DEPTH FROM FT. | M. | TO FT. | M. | SAMPLE OR RUN NO. | SAMPLE TYPE | SPLE/CORE RECOV'D (IN.) | SPT VALUES 6" | 6" | 6" | N | STRATUM DESCRIPTION |
|---|---|---|---|---|---|---|---|---|---|---|---|---|---|
| | | 0.0 | 0.00 | | | | A | | | | | | |
| | | | | 1.0 | 0.30 | | | | | | | | |
| | | 1.0 | 0.30 | | | S-1 | SS | 8 | 8 | 8 | 8 | 16 | Clay, silty, sandy, reddish-brown (moist)(Very Stiff) (FILL) |
| 2.5 | 0.76 | | | 2.5 | 0.76 | | A | | | | | | |
| | | 2.5 | 0.76 | | | | | | | | | | |
| | | | | 3.5 | 1.07 | | | | | | | | |
| | | 3.5 | 1.07 | | | | | | | | | | |
| | | | | | | S-2 | SS | | 5 | 4 | 5 | 9 | GRAVEL FROM LEACH FIELD (FILL) BORING RELOCATED AND SAMPLING RESUMED AT 6 FEET |
| 5.0 | 1.52 | | | 5.0 | 1.52 | | A | | | | | | |
| | | 5.0 | 1.52 | | | | | | | | | | |
| | | | | 6.0 | 1.83 | | | | | | | | |
| | | 6.0 | 1.83 | | | | | | | | | | |
| | | | | | | S-3 | SS | 16 | 11 | 19 | 25 | 44 | Clay, sandy, silty, reddish-brown/ yellowish-brown (moist)(Hard) |
| 7.5 | 2.29 | | | 7.5 | 2.29 | | A | | | | | | |
| | | 7.5 | 2.29 | | | | | | | | | | |
| | | | | 8.5 | 2.59 | | | | | | | | |
| | | 8.5 | 2.59 | | | | | | | | | | |
| | | | | | | S-4 | SS | 18 | 8 | 15 | 17 | 32 | Silt, sandy, yellowish-brown (moist)(Hard)(Decomposed Siltstone/ Sandstone) |
| 10.0 | 3.05 | | | 10.0 | 3.05 | | | | | | | | |
| | | 10.0 | 3.05 | | | | | | | | | | |
| | | | | | | ST-1 | ST | REC 1.8 | | | | | Pocket Penetrometer 3.25 TSF |
| | | | | 12.0 | 3.66 | | | | | | | | |
| | | 12.0 | 3.66 | | | | | | | | | | |
| | | | | 13.5 | 4.11 | | | | | | | | |
| 12.5 | 3.81 | | | | | | | | | | | | |
| | | 13.5 | 4.11 | | | S-5 | SS | 18 | 5 | 7 | 11 | 18 | DO4, very stiff |
| 15.0 | 4.57 | | | | | | | | | | | | |
| | | | | | | | A | | | | | | |
| 17.5 | 5.33 | | | | | | | | | | | | |
| | | | | 18.5 | 5.64 | | | | | | | | |
| | | 18.5 | 5.64 | | | | | | | | | | |
| | | | | 20.0 | 6.10 | S-6 | SS | 16 | 6 | 9 | 10 | 19 | Sand (F-M), silty, dark brown (moist)(Very Stiff to Medium Dense)Decomposed RK |
| 20.0 | 6.10 | | | | | | | | | | | | |

REMARKS: Continued On Page 2.
ORIGINAL LOCATION HIT LEACHATE FIELD OF SEPTIC TANK. BORING MOVED 5' NORTH, 5' WEST

amec foster wheeler — GEOTECHNICAL BRANCH, NASHVILLE, TENNESSEE

LOG OF BORING B-04, SHEET 1 OF 2

PROJECT: ALCOA HIGHWAY WIDENING (SR-115) RETAINING WALLS 7 AND 8 — DRILLER: TRI-STATE DRILLING
PROJECT NO.: 7681-15-002 — ON-SITE REP.: WDS
BORING NO. / LOCATION: STA 5+755, 10.8 m Left — DRY ON COMPLETION ?: YES
DATE: September 2, 2015 — SURFACE ELEV.: 927.5 FT. 282.7 M
REFUSAL: DEPTH NA FT. M — ELEV. FT. M
SAMPLED: NA FT. M
TOP OF ROCK: DEPTH NA FT. M — ELEV. FT. M
BEGAN CORING: DEPTH NA FT. M — ELEV. FT. M
FOOTAGE CORED (LF): 0.0 FT. 0.0 M
BOTTOM OF HOLE: DEPTH 40.0 FT. 12.2 M — ELEV. 887.5 FT. 270.5 M
BORING ADVANCED BY: — POWER AUGERING: X — WASHBORING:

WATER LEVEL DATA (IF APPLICABLE): COMPLETION: DEPTH FT. M, ELEV. FT. M; AFTER 24 HRS.: DEPTH FT. M, ELEV. FT. M; LDW AT: DEPTH FT. M, ELEV. FT. M

| STRATUM DEPTH FT. | M. | SAMPLE DEPTH FROM FT. | M. | TO FT. | M. | SAMPLE OR RUN NO. | SAMPLE TYPE | SPLE/CORE RECOV'D (IN.) | SPT VALUES 6" | 6" | 6" | N | STRATUM DESCRIPTION |
|---|---|---|---|---|---|---|---|---|---|---|---|---|---|
| | | 0.0 | 0.00 | 0.5 | 0.15 | | A | | | | | | TOPSOIL/ LEAVES |
| | | 0.5 | 0.15 | | | | | | | | | | |
| 2.5 | 0.76 | | | | | | | | | | | | |
| 5.0 | 1.52 | | | | | | A | | | | | | Sand (M-F), silty, slightly clayey, dark brown to reddish-brown (moist) |
| 7.5 | 2.29 | | | | | | | | | | | | |
| 10.0 | 3.05 | 10.0 | 3.05 | 10.0 | 3.05 | | | | | | | | |
| 12.5 | 3.81 | | | | | | | | | | | | |
| 15.0 | 4.57 | | | | | | A | | | | | | --- yellowish-brown (moist) |
| 17.5 | 5.33 | | | | | | | | | | | | |
| | | 18.0 | 5.49 | 18.0 | 5.49 | | | | | | | | |
| 20.0 | 6.10 | | | 20.0 | 6.10 | | | | | | | | Silt, sandy to slightly sandy, yellowish-brown to brown (moist) |

REMARKS: Continued On Page 2.

amec foster wheeler — GEOTECHNICAL BRANCH, NASHVILLE, TENNESSEE

LOG OF BORING B-01, SHEET 2 OF 2

PROJECT: ALCOA HIGHWAY WIDENING (SR-115) RETAINING WALLS 7 AND 8 — DRILLER: TRI-STATE DRILLING
PROJECT NO.: 7681-15-002 — ON-SITE REP.: WDS
BORING NO. / LOCATION: STA 5+716, 10.8 m Left — DRY ON COMPLETION ?: YES
DATE: September 1, 2015 — SURFACE ELEV.: 919.2 FT. 280.2 M
REFUSAL: DEPTH NA FT. M — ELEV. FT. M
SAMPLED: 30.0 FT. 9.1 M
TOP OF ROCK: DEPTH NA FT. M — ELEV. FT. M
BEGAN CORING: DEPTH NA FT. M — ELEV. FT. M
FOOTAGE CORED (LF): 0.0 FT. 0.0 M
BOTTOM OF HOLE: DEPTH 30.0 FT. 9.1 M — ELEV. 889.2 FT. 271.0 M
BORING ADVANCED BY: — POWER AUGERING: X — WASHBORING:

WATER LEVEL DATA (IF APPLICABLE): COMPLETION: DEPTH FT. M, ELEV. FT. M; AFTER 24 HRS.: DEPTH FT. M, ELEV. FT. M; LDW AT: DEPTH FT. M, ELEV. FT. M

| STRATUM DEPTH FT. | M. | SAMPLE DEPTH FROM FT. | M. | TO FT. | M. | SAMPLE OR RUN NO. | SAMPLE TYPE | SPLE/CORE RECOV'D (IN.) | "SPT" VALUES 6" | 6" | 6" | N | DESCRIPTION |
|---|---|---|---|---|---|---|---|---|---|---|---|---|---|
| | | 20.0 | 6.10 | | | | | | | | | | |
| | | | | | | | A | | | | | | |
| 22.5 | 6.86 | | | | | | | | | | | | |
| | | | | 23.5 | 7.16 | | | | | | | | |
| | | 23.5 | 7.163 | | | | | | | | | | |
| 25.0 | 7.62 | | | 25.0 | 7.62 | | | | | | | | |
| | | 25.0 | 7.62 | | | | | | | | | | |
| | | | | | | S-7 | SS | 12 | 4 | 4 | 6 | 10 | DO6, Root at tip split soil, stiff |
| 27.5 | 8.38 | | | | | | A | | | | | | |
| | | | | 28.5 | 8.69 | | | | | | | | |
| | | 28.5 | 8.687 | | | | | | | | | | |
| | | | | 30.0 | 9.14 | S-8 | SS | 18 | 3 | 2 | 3 | 5 | Silt, slightly sandy, clayey, yellowish-brown mottled reddish-brown (wet)(Medium Stiff) |
| 30.0 | 9.14 | | | | | | | | | | | | BORING TERMINATED @ 30.0 DRY ON COMPLETION |
| 32.5 | 9.91 | | | | | | | | | | | | |
| 35.0 | 10.67 | | | | | | | | | | | | |
| 37.5 | 11.43 | | | | | | | | | | | | |
| 40.0 | 12.19 | | | | | | | | | | | | |

REMARKS:

amec foster wheeler — GEOTECHNICAL BRANCH, NASHVILLE, TENNESSEE

LOG OF BORING B-2, SHEET 2 OF 2

PROJECT: ALCOA HIGHWAY WIDENING (SR-115) RETAINING WALLS 7 AND 8 — DRILLER: TRI-STATE DRILLING
PROJECT NO.: 7681-15-002 — ON-SITE REP.: WDS
BORING NO. / LOCATION: STA 5+725.00 — DRY ON COMPLETION ?: YES
DATE: September 2, 2015 — SURFACE ELEV.: 923.2 FT. 281.4 M
REFUSAL: DEPTH NA FT. M — ELEV. FT. M
SAMPLED: NA FT. M
TOP OF ROCK: DEPTH NA FT. M — ELEV. FT. M
BEGAN CORING: DEPTH NA FT. M — ELEV. FT. M
FOOTAGE CORED (LF): 0.0 FT. 0.0 M
BOTTOM OF HOLE: DEPTH 35.0 FT. 10.7 M — ELEV. 888.2 FT. 270.7 M
BORING ADVANCED BY: — POWER AUGERING: X — WASHBORING:

WATER LEVEL DATA (IF APPLICABLE): COMPLETION: DEPTH FT. M, ELEV. FT. M; AFTER 24 HRS.: DEPTH FT. M, ELEV. FT. M; LDW AT: DEPTH FT. M, ELEV. FT. M

| STRATUM DEPTH FT. | M. | SAMPLE DEPTH FROM FT. | M. | TO FT. | M. | SAMPLE OR RUN NO. | SAMPLE TYPE | SPLE/CORE RECOV'D (IN.) | "SPT" VALUES 6" | 6" | 6" | N | DESCRIPTION |
|---|---|---|---|---|---|---|---|---|---|---|---|---|---|
| | | 20.0 | 6.10 | | | | | | | | | | |
| 22.5 | 6.86 | | | | | | | | | | | | |
| 25.0 | 7.62 | | | | | | A | | | | | | Clay, very silty, slightly sandy, yellowish-brown (Moist) |
| 27.5 | 8.38 | | | | | | | | | | | | |
| | | | | 30.0 | 9.14 | | | | | | | | |
| | | 30.0 | 9.144 | | | | | | | | | | |
| 30.0 | 9.14 | | | | | | | | | | | | |
| 32.5 | 9.91 | | | | | | A | | | | | | Silt, clayey, slightly sandy, yellowish-brown (Moist) |
| 35.0 | 10.67 | | | | | | | | | | | | |
| | | | | 35.0 | 10.67 | | | | | | | | |
| 37.5 | 11.43 | | | | | | | | | | | | NO REFUSAL @ 35.0' DRY ON COMPLETION |
| 40.0 | 12.19 | | | | | | | | | | | | |

REMARKS:

amec foster wheeler — GEOTECHNICAL BRANCH, NASHVILLE, TENNESSEE

LOG OF BORING B-03, SHEET 2 OF 2

PROJECT: ALCOA HIGHWAY WIDENING (SR-115) RETAINING WALLS 7 AND 8 — DRILLER: TRI-STATE DRILLING
PROJECT NO.: 7681-15-002 — ON-SITE REP.: WDS
BORING NO. / LOCATION: STA 5+742, 12.6 m Left — DRY ON COMPLETION ?: YES
DATE: September 2, 2015 — SURFACE ELEV.: 926.5 FT. 282.4 M
REFUSAL: DEPTH NA FT. M — ELEV. FT. M
SAMPLED: 35.0 FT. 10.7 M
TOP OF ROCK: DEPTH NA FT. M — ELEV. FT. M
BEGAN CORING: DEPTH NA FT. M — ELEV. FT. M
FOOTAGE CORED (LF): 0.0 FT. 0.0 M
BOTTOM OF HOLE: DEPTH 35.0 FT. 10.7 M — ELEV. 891.5 FT. 271.7 M
BORING ADVANCED BY: — POWER AUGERING: X — WASHBORING:

WATER LEVEL DATA (IF APPLICABLE): COMPLETION: DEPTH FT. M, ELEV. FT. M; AFTER 24 HRS.: DEPTH FT. M, ELEV. FT. M; LDW AT: DEPTH FT. M, ELEV. FT. M

| STRATUM DEPTH FT. | M. | SAMPLE DEPTH FROM FT. | M. | TO FT. | M. | SAMPLE OR RUN NO. | SAMPLE TYPE | SPLE/CORE RECOV'D (IN.) | "SPT" VALUES 6" | 6" | 6" | N | DESCRIPTION |
|---|---|---|---|---|---|---|---|---|---|---|---|---|---|
| | | 20.0 | 6.10 | | | | | | | | | | |
| | | | | | | | A | | | | | | |
| 22.5 | 6.86 | | | | | | | | | | | | |
| | | | | 23.5 | 7.16 | | | | | | | | |
| | | 23.5 | 7.163 | | | | | | | | | | |
| 25.0 | 7.62 | | | 25.0 | 7.62 | | | | | | | | |
| | | 25.0 | 7.62 | | | | | | | | | | |
| | | | | | | S-7 | SS | 14 | 6 | 10 | 12 | 22 | Sand (F-M), silty, dark brown (moist)(Medium Dense)(Decomposed Sandstone) |
| 27.5 | 8.38 | | | | | | A | | | | | | |
| | | | | 28.5 | 8.69 | | | | | | | | |
| | | 28.5 | 8.687 | | | | | | | | | | |
| | | | | 30.0 | 9.14 | S-8 | SS | 16 | 4 | 6 | 7 | 13 | Sand (F-M), silty, yellowish-brown/ dark brown (moist)(Medium Dense)(Decomposed Sandstone) |
| 30.0 | 9.14 | | | | | | | | | | | | |
| | | 30.0 | 9.144 | | | | | | | | | | |
| | | | | | | | A | | | | | | |
| 32.5 | 9.91 | | | | | | | | | | | | |
| | | | | 33.5 | 10.21 | | | | | | | | |
| | | 33.5 | 10.21 | | | | | | | | | | |
| | | | | 35.0 | 10.67 | S-9 | SS | 16 | 4 | 7 | 7 | 14 | DO8 (Medium Dense) |
| 35.0 | 10.67 | | | | | | | | | | | | |
| 37.5 | 11.43 | | | | | | | | | | | | BORING TERMINATED @ 35.0' DRY ON COMPLETION |
| 40.0 | 12.19 | | | | | | | | | | | | |

REMARKS:
ORIGINAL LOCATION HIT LEACHATE FIELD OF SEPTIC TANK. BORING MOVED 5' NORTH, 5' WEST

amec foster wheeler — GEOTECHNICAL BRANCH, NASHVILLE, TENNESSEE

LOG OF BORING B-04, SHEET 2 OF 2

PROJECT: ALCOA HIGHWAY WIDENING (SR-115) RETAINING WALLS 7 AND 8 — DRILLER: TRI-STATE DRILLING
PROJECT NO.: 7681-15-002 — ON-SITE REP.: WDS
BORING NO. / LOCATION: STA 5+755, 10.8 m Left — DRY ON COMPLETION ?: YES
DATE: September 2, 2015 — SURFACE ELEV.: 927.5 FT. 282.7 M
REFUSAL: DEPTH NA FT. M — ELEV. FT. M
SAMPLED: NA FT. M
TOP OF ROCK: DEPTH NA FT. M — ELEV. FT. M
BEGAN CORING: DEPTH NA FT. M — ELEV. FT. M
FOOTAGE CORED (LF): 0.0 FT. 0.0 M
BOTTOM OF HOLE: DEPTH 40.0 FT. 12.2 M — ELEV. 887.5 FT. 270.5 M
BORING ADVANCED BY: — POWER AUGERING: X — WASHBORING:

WATER LEVEL DATA (IF APPLICABLE): COMPLETION: DEPTH FT. M, ELEV. FT. M; AFTER 24 HRS.: DEPTH FT. M, ELEV. FT. M; LDW AT: DEPTH FT. M, ELEV. FT. M

| STRATUM DEPTH FT. | M. | SAMPLE DEPTH FROM FT. | M. | TO FT. | M. | SAMPLE OR RUN NO. | SAMPLE TYPE | SPLE/CORE RECOV'D (IN.) | "SPT" VALUES 6" | 6" | 6" | N | DESCRIPTION |
|---|---|---|---|---|---|---|---|---|---|---|---|---|---|
| | | 20.0 | 6.10 | | | | | | | | | | |
| 22.5 | 6.86 | | | | | | | | | | | | |
| 25.0 | 7.62 | | | | | | | | | | | | |
| 27.5 | 8.38 | | | | | | | | | | | | |
| 30.0 | 9.14 | | | | | | A | | | | | | Silt, sandy to slightly sandy, yellowish-brown to brown (moist) |
| 32.5 | 9.91 | | | | | | | | | | | | HARD DRILLING 30' TO 40' |
| 35.0 | 10.67 | | | | | | | | | | | | |
| 37.5 | 11.43 | | | | | | | | | | | | |
| | | | | 40.0 | 12.19 | | | | | | | | |
| 40.0 | 12.19 | | | | | | | | | | | | BORING TERMINATED at 12.2 m DRY ON COMPLETION |

REMARKS:

# PRELIMINARY PLANS

SEALED BY

TENNESSEE METRIC D.O.T.

COORDINATES ARE NAD/83(1995), ARE DATUM ADJUSTED BY THE FACTOR OF 1.000 AND TIED TO THE TGRN. ALL ELEVATIONS ARE REFERENCED TO THE NAVD 1988.

STATE OF TENNESSEE
DEPARTMENT OF TRANSPORTATION

SOIL BORING LOGS
RETAINING WALLS
NO. 7 AND 8

SCALE: AS NOTED

CONTRACTOR NOTES:

1. THE GEOTECHNICAL REPORT WHICH INCLUDES DETAILED BORING RECORDS, SOIL AND ROCK TESTING DATA IS AVAILABLE UPON REQUEST. ROCK CORE SAMPLES ARE AVAILABLE FOR INSPECTION BY THE CONTRACTOR.

2. IT IS THE RESPONSIBILITY OF THE CONTRACTOR TO REVIEW THE PLANS, GEOTECHNICAL REPORT, AND BORING LOGS TO BECOME FAMILIAR WITH THE SUBSURFACE CONDITIONS PERTINENT TO THE ASSOCIATED WORK TO BE CONDUCTED BY THE CONTRACTOR. THE CONTRACTOR SHOULD ALSO CONSIDER THEIR EXPERIENCE IN THE PROJECT'S GEOLOGIC AND SUBSURFACE SETTING AND THEIR EXPERIENCE IN DEALING WITH VARIABLE SUBSURFACE CONDITIONS ACROSS A PROJECT SITE TO BASE THEIR BID UPON AND DECISIONS REGARDING APPROPRIATE EQUIPMENT TO BE UTILIZED.

9/9/2015
R:_Infrastructure Project Files\2015 Infra Projects\7681-15-002 ALCOA Hwy (SR 115) WALLS 7 AND 8\06 - CADD\03-23 RETAINING WALL NO. 7 AND 8 SOIL BORING LOGS.SHT

amec foster wheeler — GEOTECHNICAL BRANCH, NASHVILLE, TENNESSEE

LOG OF BORING B-7, SHEET 1 OF 3

PROJECT: ALCOA HIGHWAY WIDENING (SR-115) RETAINING WALLS 7 AND 8 — DRILLER: TRI-STATE DRILLING
PROJECT NO.: 7681-15-002 — ON-SITE REP.: WDS
BORING NO. / LOCATION: STA 5+800, 10.8 m Left — DRY ON COMPLETION ?: YES
DATE: July 22, 2015 — SURFACE ELEV.: 929.6 FT. 283.3 M
REFUSAL: DEPTH NA FT. M — ELEV. FT. M
SAMPLED: 45.0 FT. 13.7 M
TOP OF ROCK: DEPTH NA FT. M — ELEV. FT. M
BEGAN CORING: DEPTH NA FT. M — ELEV. FT. M
FOOTAGE CORED (LF): 0.0 FT. 0.0 M
BOTTOM OF HOLE: DEPTH 45.0 FT. 13.7 M — ELEV. 884.6 FT. 269.6 M
BORING ADVANCED BY: — POWER AUGERING: X — WASHBORING:

WATER LEVEL DATA (IF APPLICABLE): COMPLETION: DEPTH FT. M, ELEV. FT. M; AFTER 24 HRS.: DEPTH FT. M, ELEV. FT. M; LDW AT: DEPTH FT. M, ELEV. FT. M

| STRATUM DEPTH FT. | STRATUM DEPTH M. | SAMPLE DEPTH FROM FT. | SAMPLE DEPTH FROM M. | SAMPLE DEPTH TO FT. | SAMPLE DEPTH TO M. | SAMPLE OR RUN NO. | SAMPLE TYPE | SPLE/CORE RECOV'D (IN.) | SPT VALUES 6" | 6" | 6" | N | STRATUM DESCRIPTION |
|---|---|---|---|---|---|---|---|---|---|---|---|---|---|
| | | 0.0 | 0.00 | | | | A | | | | | | Clay, sandy, silty, reddish-brown |
| | | 1.0 | 0.30 | 1.0 | 0.30 | S-1 | SS | 14 | 3 | 4 | 6 | 10 | Clay, sandy, silty, reddish-brown (moist)(stiff) |
| 2.5 | 0.76 | 2.5 | 0.76 | 2.5 | 0.76 | | A | | | | | | |
| | | 3.5 | 1.07 | 3.5 | 1.07 | S-2 | SS | 14 | 3 | 6 | 6 | 12 | DO1, slightly sandy, light yellowish-brown |
| 5.0 | 1.52 | 5.0 | 1.52 | 5.0 | 1.52 | | A | | | | | | |
| | | 6.0 | 1.83 | 6.0 | 1.83 | S-3 | SS | 14 | 4 | 8 | 10 | 18 | DO1, sandy, yellowish-brown (Very Stiff)(Decomposed Siltstone/Sandstone) |
| 7.5 | 2.29 | 7.5 | 2.29 | 7.5 | 2.29 | | A | | | | | | |
| | | 8.5 | 2.59 | 8.5 | 2.59 | S-4 | SS | 12 | 5 | 6 | 8 | 14 | DO3, (stiff) |
| 10.0 | 3.05 | 10.0 | 3.05 | 10.0 | 3.05 | | A | | | | | | |
| 12.5 | 3.81 | | | | | | | | | | | | |
| | | 13.5 | 4.11 | 13.5 | 4.11 | S-5 | SS | 14 | 5 | 5 | 6 | 11 | Sand (M-F), silty, brown (wet)(Medium Dense)(Decomposed Sandstone) |
| 15.0 | 4.57 | 15.0 | 4.57 | 15.0 | 4.57 | | A | | | | | | |
| 17.5 | 5.33 | | | | | | | | | | | | |
| | | 18.5 | 5.64 | 18.5 | 5.64 | S-6 | SS | 16 | 4 | 7 | 10 | 17 | DO5, yellowish-brown/ brown |
| 20.0 | 6.10 | | | 20.0 | 6.10 | | | | | | | | |

REMARKS: Continued On Page 2

amec foster wheeler — GEOTECHNICAL BRANCH, NASHVILLE, TENNESSEE

LOG OF BORING B-7, SHEET 3 OF 3

PROJECT: ALCOA HIGHWAY WIDENING (SR-115) RETAINING WALLS 7 AND 8 — DRILLER: TRI-STATE DRILLING
PROJECT NO.: 7681-15-002 — ON-SITE REP.: WDS
BORING NO. / LOCATION: STA 5+800, 10.8 m Left — DRY ON COMPLETION ?: YES
DATE: July 22, 2015 — SURFACE ELEV.: 929.6 FT. 283.3 M
REFUSAL: DEPTH NA FT. M — ELEV. FT. M
SAMPLED: 45.0 FT. 13.7 M
TOP OF ROCK: DEPTH NA FT. M — ELEV. FT. M
BEGAN CORING: DEPTH NA FT. M — ELEV. FT. M
FOOTAGE CORED (LF): FT. M
BOTTOM OF HOLE: DEPTH 45.0 FT. 13.7 M — ELEV. 884.6 FT. 269.6 M
BORING ADVANCED BY: — POWER AUGERING: X — WASHBORING:

WATER LEVEL DATA (IF APPLICABLE): COMPLETION: DEPTH FT. M, ELEV. FT. M; AFTER 24 HRS.: DEPTH FT. M, ELEV. FT. M; LDW AT: DEPTH FT. M, ELEV. FT. M

| STRATUM DEPTH FT. | STRATUM DEPTH M. | SAMPLE DEPTH FROM FT. | SAMPLE DEPTH FROM M. | SAMPLE DEPTH TO FT. | SAMPLE DEPTH TO M. | SAMPLE OR RUN NO. | SAMPLE TYPE | SPLE/CORE RECOV'D (IN.) | "SPT" VALUES 6" | 6" | 6" | N | DESCRIPTION |
|---|---|---|---|---|---|---|---|---|---|---|---|---|---|
| | | | | | | | A | | | | | | |
| 42.5 | 12.95 | 43.5 | 13.26 | 43.5 | 13.26 | S-11 | SS | 16 | 4 | 5 | 6 | 11 | DO10, yellowish-brown |
| 45.0 | 13.72 | 45.0 | 13.72 | 45.0 | 13.72 | | | | | | | | |
| 47.5 | 14.48 | | | | | | | | | | | | NO REFUSAL @ 45' DRY ON COMPLETION |
| 50.0 | 15.24 | | | | | | | | | | | | |
| 52.5 | 16.00 | | | | | | | | | | | | |
| 55.0 | 16.76 | | | | | | | | | | | | |
| 57.5 | 17.53 | | | | | | | | | | | | |
| 60.0 | 18.29 | | | | | | | | | | | | |

REMARKS:

amec foster wheeler — GEOTECHNICAL BRANCH, NASHVILLE, TENNESSEE

LOG OF BORING B-8, SHEET 2 OF 3

PROJECT: ALCOA HIGHWAY WIDENING (SR-115) RETAINING WALLS 7 AND 8 — DRILLER: TRI-STATE DRILLING
PROJECT NO.: 7681-15-002 — ON-SITE REP.: WDS
BORING NO. / LOCATION: STA 5+815, 11.0 m Left — DRY ON COMPLETION ?: YES
DATE: July 22, 2015 — SURFACE ELEV.: 931.6 FT. 284.0 M
REFUSAL: DEPTH NA FT. M — ELEV. FT. M
SAMPLED: 0.0 FT. 0.0 M
TOP OF ROCK: DEPTH NA FT. M — ELEV. FT. M
BEGAN CORING: DEPTH NA FT. M — ELEV. FT. M
FOOTAGE CORED (LF): 0.0 FT. 0.0 M
BOTTOM OF HOLE: DEPTH 50.0 FT. 15.2 M — ELEV. 881.6 FT. 268.7 M
BORING ADVANCED BY: — POWER AUGERING: X — WASHBORING:

WATER LEVEL DATA (IF APPLICABLE): COMPLETION: DEPTH FT. M, ELEV. FT. M; AFTER 24 HRS.: DEPTH FT. M, ELEV. FT. M; LDW AT: DEPTH FT. M, ELEV. FT. M

| STRATUM DEPTH FT. | STRATUM DEPTH M. | SAMPLE DEPTH FROM FT. | SAMPLE DEPTH FROM M. | SAMPLE DEPTH TO FT. | SAMPLE DEPTH TO M. | SAMPLE OR RUN NO. | SAMPLE TYPE | SPLE/CORE RECOV'D (IN.) | "SPT" VALUES 6" | 6" | 6" | N | DESCRIPTION |
|---|---|---|---|---|---|---|---|---|---|---|---|---|---|
| | | 20.0 | 6.10 | | | | | | | | | | |
| 22.5 | 6.86 | | | | | | | | | | | | |
| 25.0 | 7.62 | | | | | | A | | | | | | Sand, silty, clayey, brown (Moist) |
| 27.5 | 8.38 | | | | | | | | | | | | |
| 30.0 | 9.14 | | | 32.0 | 9.75 | | | | | | | | |
| 32.5 | 9.91 | 32.0 | 9.754 | | | | | | | | | | |
| 35.0 | 10.67 | | | | | | A | | | | | | Clay, very silty, sandy, yellowish-brown (Moist) |
| 37.5 | 11.43 | | | | | | | | | | | | |
| 40.0 | 12.19 | | | 40.0 | 12.19 | | | | | | | | |

REMARKS: Continued On Page 3.

amec foster wheeler — GEOTECHNICAL BRANCH, NASHVILLE, TENNESSEE

LOG OF BORING B-9, SHEET 1 OF 3

PROJECT: ALCOA HIGHWAY WIDENING (SR-115) RETAINING WALLS 7 AND 8 — DRILLER: TRI-STATE DRILLING
PROJECT NO.: 7681-15-002 — ON-SITE REP.: WDS
BORING NO. / LOCATION: STA 5+830, 11.0 m Left — DRY ON COMPLETION ?: YES
DATE: July 22, 2015 — SURFACE ELEV.: 933.1 FT. 284.4 M
REFUSAL: DEPTH NA FT. M — ELEV. FT. M
SAMPLED: 50.0 FT. 15.2 M
TOP OF ROCK: DEPTH NA FT. M — ELEV. FT. M
BEGAN CORING: DEPTH NA FT. M — ELEV. FT. M
FOOTAGE CORED (LF): 0.0 FT. 0.0 M
BOTTOM OF HOLE: DEPTH 50.0 FT. 15.2 M — ELEV. 883.1 FT. 269.2 M
BORING ADVANCED BY: — POWER AUGERING: X — WASHBORING:

WATER LEVEL DATA (IF APPLICABLE): COMPLETION: DEPTH FT. M, ELEV. FT. M; AFTER 24 HRS.: DEPTH FT. M, ELEV. FT. M; LDW AT: DEPTH FT. M, ELEV. FT. M

| STRATUM DEPTH FT. | STRATUM DEPTH M. | SAMPLE DEPTH FROM FT. | SAMPLE DEPTH FROM M. | SAMPLE DEPTH TO FT. | SAMPLE DEPTH TO M. | SAMPLE OR RUN NO. | SAMPLE TYPE | SPLE/CORE RECOV'D (IN.) | SPT VALUES 6" | 6" | 6" | N | STRATUM DESCRIPTION |
|---|---|---|---|---|---|---|---|---|---|---|---|---|---|
| | | 0.0 | 0.00 | | | | A | | | | | | Clay, sandy, silty, reddish-brown |
| | | 1.0 | 0.30 | 1.0 | 0.30 | S-1 | SS | 16 | 2 | 2 | 4 | 6 | Clay, sandy, silty, reddish-brown (Moist)(Medium Stiff) |
| 2.5 | 0.76 | 2.5 | 0.76 | 2.5 | 0.76 | | A | | | | | | |
| | | 3.5 | 1.07 | 3.5 | 1.07 | S-2 | SS | 14 | 4 | 4 | 5 | 9 | DO #1 (Moist)(Stiff) |
| 5.0 | 1.52 | 5.0 | 1.52 | 5.0 | 1.52 | | A | | | | | | |
| | | 6.0 | 1.83 | 6.0 | 1.83 | S-3 | SS | 12 | 4 | 7 | 10 | 17 | DO1 with tree roots (Very Stiff) |
| 7.5 | 2.29 | 7.5 | 2.29 | 7.5 | 2.29 | | A | | | | | | |
| | | 8.5 | 2.59 | 8.5 | 2.59 | S-4 | SS | 14 | 4 | 7 | 9 | 16 | DO #3 |
| 10.0 | 3.05 | 10.0 | 3.05 | 10.0 | 3.05 | | | | | | | | |
| | | | | | | ST-1 | ST | 19 | | | | | Pocket Penetrometer 4.5+ TSF |
| 12.5 | 3.81 | 12.0 | 3.66 | 12.0 | 3.66 | | | | | | | | |
| | | 13.5 | 4.11 | 13.5 | 4.11 | S-5 | SS | 14 | 9 | 9 | 10 | 19 | Sand (F-M), silty, dark brown (moist)(Medium Dense) |
| 15.0 | 4.57 | | | | | | | | | | | | |
| 17.5 | 5.33 | | | | | | | | | | | | |
| | | 18.5 | 5.64 | 18.5 | 5.64 | S-6 | SS | 16 | 3 | 4 | 7 | 11 | Clay, sandy, silty, reddish-brown with sand pockets and roots (Moist)(Stiff) |
| 20.0 | 6.10 | | | 20.0 | 6.10 | | | | | | | | |

REMARKS: Continued On Page 2.

amec foster wheeler — GEOTECHNICAL BRANCH, NASHVILLE, TENNESSEE

LOG OF BORING B-7, SHEET 2 OF 3

PROJECT: ALCOA HIGHWAY WIDENING (SR-115) RETAINING WALLS 7 AND 8 — DRILLER: TRI-STATE DRILLING
PROJECT NO.: 7681-15-002 — ON-SITE REP.: WDS
BORING NO. / LOCATION: STA 5+800, 10.8 m Left — DRY ON COMPLETION ?: YES
DATE: July 22, 2015 — SURFACE ELEV.: 929.6 FT. 283.3 M
REFUSAL: DEPTH NA FT. M — ELEV. FT. M
SAMPLED: 45.0 FT. 13.7 M
TOP OF ROCK: DEPTH NA FT. M — ELEV. FT. M
BEGAN CORING: DEPTH NA FT. M — ELEV. FT. M
FOOTAGE CORED (LF): FT. M
BOTTOM OF HOLE: DEPTH 45.0 FT. 13.7 M — ELEV. 884.6 FT. 269.6 M
BORING ADVANCED BY: — POWER AUGERING: X — WASHBORING:

WATER LEVEL DATA (IF APPLICABLE): COMPLETION: DEPTH FT. M, ELEV. FT. M; AFTER 24 HRS.: DEPTH FT. M, ELEV. FT. M; LDW AT: DEPTH FT. M, ELEV. FT. M

| STRATUM DEPTH FT. | STRATUM DEPTH M. | SAMPLE DEPTH FROM FT. | SAMPLE DEPTH FROM M. | SAMPLE DEPTH TO FT. | SAMPLE DEPTH TO M. | SAMPLE OR RUN NO. | SAMPLE TYPE | SPLE/CORE RECOV'D (IN.) | "SPT" VALUES 6" | 6" | 6" | N | DESCRIPTION |
|---|---|---|---|---|---|---|---|---|---|---|---|---|---|
| | | 20.0 | 6.10 | | | | A | | | | | | |
| 22.5 | 6.86 | | | 23.5 | 7.16 | | | | | | | | |
| | | 23.5 | 7.16 | | | S-7 | SS | 16 | 2 | 3 | 3 | 6 | DO6, dark brown (wet)(loose) |
| 25.0 | 7.62 | | | 25.0 | 7.62 | | | | | | | | |
| | | 25.0 | 7.62 | | | | A | | | | | | |
| 27.5 | 8.38 | | | | | | | | | | | | |
| | | 28.5 | 8.69 | 28.5 | 8.69 | | | | | | | | |
| | | | | | | S-8 | SS | 16 | 2 | 3 | 3 | 6 | DO7, yellowish-brown/ brown |
| 30.0 | 9.14 | 30.0 | 9.14 | 30.0 | 9.14 | | | | | | | | |
| | | | | | | | A | | | | | | |
| 32.5 | 9.91 | | | | | | | | | | | | |
| | | 33.5 | 10.21 | 33.5 | 10.21 | | | | | | | | |
| | | | | | | S-9 | SS | 8 | 5 | 7 | 10 | 17 | Silt, sandy, yellowish-brown to Sand (M), silty dark brown (Very Moist)(Stiff to Medium Dense) |
| 35.0 | 10.67 | 35.0 | 10.67 | 35.0 | 10.67 | | | | | | | | |
| | | | | | | | A | | | | | | |
| 37.5 | 11.43 | | | | | | | | | | | | |
| | | 38.5 | 11.73 | 38.5 | 11.73 | | | | | | | | |
| | | | | | | SL-10 | SS | 16 | 3 | 3 | 7 | 10 | Clay, sandy, silty, light yellowish-brown/ reddish-brown (Moist)(Stiff)(Decomposed Siltstone Sandstone) |
| 40.0 | 12.19 | | | 40.0 | 12.19 | | | | | | | | |

REMARKS: Continued On Page 3.

amec foster wheeler — GEOTECHNICAL BRANCH, NASHVILLE, TENNESSEE

LOG OF BORING B-8, SHEET 1 OF 3

PROJECT: ALCOA HIGHWAY WIDENING (SR-115) RETAINING WALLS 7 AND 8 — DRILLER: TRI-STATE DRILLING
PROJECT NO.: 7681-15-002 — ON-SITE REP.: WDS
BORING NO. / LOCATION: STA 5+815, 11.0 m Left — DRY ON COMPLETION ?: YES
DATE: July 22, 2015 — SURFACE ELEV.: 931.6 FT. 284.0 M
REFUSAL: DEPTH NA FT. M — ELEV. FT. M
SAMPLED: 0.0 FT. 0.0 M
TOP OF ROCK: DEPTH NA FT. M — ELEV. FT. M
BEGAN CORING: DEPTH NA FT. M — ELEV. FT. M
FOOTAGE CORED (LF): 0.0 FT. 0.0 M
BOTTOM OF HOLE: DEPTH 50.0 FT. 15.2 M — ELEV. 881.6 FT. 268.7 M
BORING ADVANCED BY: — POWER AUGERING: X — WASHBORING:

WATER LEVEL DATA (IF APPLICABLE): COMPLETION: DEPTH FT. M, ELEV. FT. M; AFTER 24 HRS.: DEPTH FT. M, ELEV. FT. M; LDW AT: DEPTH FT. M, ELEV. FT. M

| STRATUM DEPTH FT. | STRATUM DEPTH M. | SAMPLE DEPTH FROM FT. | SAMPLE DEPTH FROM M. | SAMPLE DEPTH TO FT. | SAMPLE DEPTH TO M. | SAMPLE OR RUN NO. | SAMPLE TYPE | SPLE/CORE RECOV'D (IN.) | "SPT" VALUES 6" | 6" | 6" | N | DESCRIPTION |
|---|---|---|---|---|---|---|---|---|---|---|---|---|---|
| | | 0.0 | 0.00 | | | | | | | | | | |
| 2.5 | 0.76 | | | | | | | | | | | | |
| 5.0 | 1.52 | | | | | | | | | | | | |
| 7.5 | 2.29 | | | | | | | | | | | | |
| 10.0 | 3.05 | | | | | | A | | | | | | Clay, sandy, silty, reddish-brown (Moist) |
| 12.5 | 3.81 | | | | | | | | | | | | |
| 15.0 | 4.57 | | | | | | | | | | | | |
| 17.5 | 5.33 | | | 18.0 | 5.49 | | | | | | | | |
| | | 18.0 | 5.49 | | | | | | | | | | |
| | | | | 20.0 | 6.10 | | | | | | | | Sand, silty, clayey, brown (Moist) |
| 20.0 | 6.10 | | | | | | | | | | | | |

REMARKS: Continued On Page 2

amec foster wheeler — GEOTECHNICAL BRANCH, NASHVILLE, TENNESSEE

LOG OF BORING B-8, SHEET 3 OF 3

PROJECT: ALCOA HIGHWAY WIDENING (SR-115) RETAINING WALLS 7 AND 8 — DRILLER: TRI-STATE DRILLING
PROJECT NO.: 7681-15-002 — ON-SITE REP.: WDS
BORING NO. / LOCATION: STA 5+815, 11.0 m Left — DRY ON COMPLETION ?: YES
DATE: July 22, 2015 — SURFACE ELEV.: 931.6 FT. 284.0 M
REFUSAL: DEPTH NA FT. M — ELEV. FT. M
SAMPLED: 0.0 FT. 0.0 M
TOP OF ROCK: DEPTH NA FT. M — ELEV. FT. M
BEGAN CORING: DEPTH NA FT. M — ELEV. FT. M
FOOTAGE CORED (LF): 0.0 FT. 0.0 M
BOTTOM OF HOLE: DEPTH 50.0 FT. 15.2 M — ELEV. 881.6 FT. 268.7 M
BORING ADVANCED BY: — POWER AUGERING: X — WASHBORING:

WATER LEVEL DATA (IF APPLICABLE): COMPLETION: DEPTH FT. M, ELEV. FT. M; AFTER 24 HRS.: DEPTH FT. M, ELEV. FT. M; LDW AT: DEPTH FT. M, ELEV. FT. M

| STRATUM DEPTH FT. | STRATUM DEPTH M. | SAMPLE DEPTH FROM FT. | SAMPLE DEPTH FROM M. | SAMPLE DEPTH TO FT. | SAMPLE DEPTH TO M. | SAMPLE OR RUN NO. | SAMPLE TYPE | SPLE/CORE RECOV'D (IN.) | "SPT" VALUES 6" | 6" | 6" | N | DESCRIPTION |
|---|---|---|---|---|---|---|---|---|---|---|---|---|---|
| | | 40.0 | 12.19 | | | | A | | | | | | Same As Above |
| 42.5 | 12.95 | | | 42.0 | 12.80 | | | | | | | | |
| | | 42.0 | 12.8 | | | | | | | | | | |
| 45.0 | 13.72 | | | | | | | | | | | | |
| | | | | | | | A | | | | | | Clay, very sandy, silty, dark brown (Moist) |
| 47.5 | 14.48 | | | | | | | | | | | | |
| | | | | 50.0 | 15.24 | | | | | | | | |
| 50.0 | 15.24 | | | | | | | | | | | | |
| 52.5 | 16.00 | | | | | | | | | | | | |
| 55.0 | 16.76 | | | | | | | | | | | | |
| 57.5 | 17.53 | | | | | | | | | | | | |
| 60.0 | 18.29 | | | | | | | | | | | | NO REFUSAL @ 50.0' DRY ON COMPLETION |

REMARKS:

amec foster wheeler — GEOTECHNICAL BRANCH, NASHVILLE, TENNESSEE

LOG OF BORING B-9, SHEET 2 OF 3

PROJECT: ALCOA HIGHWAY WIDENING (SR-115) RETAINING WALLS 7 AND 8 — DRILLER: TRI-STATE DRILLING
PROJECT NO.: 7681-15-002 — ON-SITE REP.: WDS
BORING NO. / LOCATION: STA 5+830, 11.0 m Left — DRY ON COMPLETION ?: YES
DATE: July 22, 2015 — SURFACE ELEV.: 933.1 FT. 284.4 M
REFUSAL: DEPTH NA FT. M — ELEV. FT. M
SAMPLED: 50.0 FT. 15.2 M
TOP OF ROCK: DEPTH NA FT. M — ELEV. FT. M
BEGAN CORING: DEPTH NA FT. M — ELEV. FT. M
FOOTAGE CORED (LF): 0.0 FT. 0.0 M
BOTTOM OF HOLE: DEPTH 50.0 FT. 15.2 M — ELEV. 883.1 FT. 269.2 M
BORING ADVANCED BY: — POWER AUGERING: X — WASHBORING:

WATER LEVEL DATA (IF APPLICABLE): COMPLETION: DEPTH FT. M, ELEV. FT. M; AFTER 24 HRS.: DEPTH FT. M, ELEV. FT. M; LDW AT: DEPTH FT. M, ELEV. FT. M

| STRATUM DEPTH FT. | STRATUM DEPTH M. | SAMPLE DEPTH FROM FT. | SAMPLE DEPTH FROM M. | SAMPLE DEPTH TO FT. | SAMPLE DEPTH TO M. | SAMPLE OR RUN NO. | SAMPLE TYPE | SPLE/CORE RECOV'D (IN.) | "SPT" VALUES 6" | 6" | 6" | N | DESCRIPTION |
|---|---|---|---|---|---|---|---|---|---|---|---|---|---|
| | | 20.0 | 6.10 | | | | | | | | | | |
| 22.5 | 6.86 | | | 23.5 | 7.16 | | A | | | | | | |
| | | 23.5 | 7.163 | | | S-7 | SS | 18 | 3 | 4 | 6 | 10 | Clay, very silty, sandy, light yellowish-brown/ reddish-brown (Moist)(Stiff)(Decomposed Siltstone/ Sandstone) |
| 25.0 | 7.62 | | | 25.0 | 7.62 | | | | | | | | |
| | | 25.0 | 7.62 | | | | A | | | | | | |
| 27.5 | 8.38 | | | | | | | | | | | | |
| | | 28.5 | 8.687 | 28.5 | 8.69 | | | | | | | | |
| | | | | | | S-8 | SS | 16 | 3 | 5 | 6 | 11 | Sand (M-F), silty, dark brown/ black (Moist)(Medium Dense)(Decomposed Siltstone/ Sandstone) |
| 30.0 | 9.14 | 30.0 | 9.144 | 30.0 | 9.14 | | | | | | | | |
| | | | | | | | A | | | | | | |
| 32.5 | 9.91 | | | | | | | | | | | | |
| | | 33.5 | 10.21 | 33.5 | 10.21 | | | | | | | | |
| | | | | | | S-9 | SS | 16 | 3 | 4 | 6 | 10 | Clay, very silty, sandy, light yellowish-brown/ black (Moist)(Stiff)(Decomposed Siltstone/ Sandstone) |
| 35.0 | 10.67 | 35.0 | 10.67 | 35.0 | 10.67 | | | | | | | | |
| | | | | | | | A | | | | | | |
| 37.5 | 11.43 | | | | | | | | | | | | |
| | | 38.5 | 11.73 | 38.5 | 11.73 | | | | | | | | |
| | | | | | | S-10 | SS | 16 | 5 | 4 | 5 | 9 | Sand (M), silty, slightly clayey, dark brown/ black (wet)(Loose)(Decomposed Sandstone) |
| 40.0 | 12.19 | | | 40.0 | 12.19 | | | | | | | | |

REMARKS: Continued On Page 3.

| TYPE | YEAR | PROJECT NO. | SHEET NO. |
|---|---|---|---|
| CONST. | 2015 | 47026-3279-14 | ---- |

CONTRACTOR NOTES:

1. THE GEOTECHNICAL REPORT WHICH INCLUDES DETAILED BORING RECORDS, SOIL AND ROCK TESTING DATA IS AVAILABLE UPON REQUEST. ROCK CORE SAMPLES ARE AVAILABLE FOR INSPECTION BY THE CONTRACTOR.

2. IT IS THE RESPONSIBILITY OF THE CONTRACTOR TO REVIEW THE PLANS, GEOTECHNICAL REPORT, AND BORING LOGS TO BECOME FAMILIAR WITH THE SUBSURFACE CONDITIONS PERTINENT TO THE ASSOCIATED WORK TO BE CONDUCTED BY THE CONTRACTOR. THE CONTRACTOR SHOULD ALSO CONSIDER THEIR EXPERIENCE IN THE PROJECT'S GEOLOGIC AND SUBSURFACE SETTING AND THEIR EXPERIENCE IN DEALING WITH VARIABLE SUBSURFACE CONDITIONS ACROSS A PROJECT SITE TO BASE THEIR BID UPON AND DECISIONS REGARDING APPROPRIATE EQUIPMENT TO BE UTILIZED.

PRELIMINARY PLANS

SEALED BY

TENNESSEE METRIC D.O.T.

COORDINATES ARE NAD/83(1995), ARE DATUM ADJUSTED BY THE FACTOR OF 1.000 AND TIED TO THE TGRN. ALL ELEVATIONS ARE REFERENCED TO THE NAVD 1988.

STATE OF TENNESSEE
DEPARTMENT OF TRANSPORTATION

SOIL BORING LOGS
RETAINING WALLS
NO. 7 AND 8

SCALE: AS NOTED

9/9/2015
R:_Infrastructure Project Files\2015 Infra Projects\7681-15-002 ALCOA Hwy (SR 115) WALLS 7 AND 8\06 - CADD\03-23 RETAINING WALL NO. 7 AND 8 SOIL BORING LOGS.SHT

| TYPE | YEAR | PROJECT NO. | SHEET NO. |
|---|---|---|---|
| CONST. | 2015 | 47026-3279-14 | ---- |

amec foster wheeler — GEOTECHNICAL BRANCH, NASHVILLE, TENNESSEE

LOG OF BORING B-9, SHEET 3 OF 3

PROJECT: ALCOA HIGHWAY WIDENING (SR-115) RETAINING WALLS 7 AND 8 — DRILLER: TRI-STATE DRILLING
PROJECT NO.: 7681-15-002 — ON-SITE REP.: WDS
BORING NO. / LOCATION: STA 5+830, 11.0 m Left — DRY ON COMPLETION ?: YES
DATE: July 22, 2015 — SURFACE ELEV.: 933.1 FT. 284.4 M
REFUSAL: DEPTH NA FT. M — ELEV. FT. M
SAMPLED: 50.0 FT. 15.2 M
TOP OF ROCK: DEPTH NA FT. M — ELEV. FT. M
BEGAN CORING: DEPTH NA FT. M — ELEV. FT. M
FOOTAGE CORED (LF): 0.0 FT. 0.0 M
BOTTOM OF HOLE: DEPTH 50.0 FT. 15.2 M — ELEV. 883.1 FT. 269.2 M
BORING ADVANCED BY: — POWER AUGERING: X — WASHBORING:

WATER LEVEL DATA (IF APPLICABLE): COMPLETION: DEPTH FT. M, ELEV. FT. M; AFTER 24 HRS.: DEPTH FT. M, ELEV. FT. M; LDW AT: DEPTH FT. M, ELEV. FT. M

| STRATUM DEPTH FT. | STRATUM DEPTH M. | SAMPLE DEPTH FROM FT. | SAMPLE DEPTH FROM M. | SAMPLE DEPTH TO FT. | SAMPLE DEPTH TO M. | SAMPLE OR RUN NO. | SAMPLE TYPE | SPLE/CORE RECOV'D (IN.) | SPT VALUES 6" | 6" | 6" | N | DESCRIPTION |
|---|---|---|---|---|---|---|---|---|---|---|---|---|---|
| 42.5 | 12.95 | 40.0 | 12.19 | | | | A | | | | | | |
| | | 43.5 | 13.26 | 43.5 | 13.26 | | | | | | | | |
| 45.0 | 13.72 | 45.0 | 13.72 | 45.0 | 13.72 | S-11 | SS | 16 | 3 | 3 | 6 | 9 | Silt, sandy, slightly clayey, light yellowish-brown/ black (Moist)(Stiff)(Decomposed Siltstone/ Sandstone) |
| 47.5 | 14.48 | | | | | | A | | | | | | |
| | | 48.5 | 14.78 | 48.5 | 14.78 | | | | | | | | |
| 50.0 | 15.24 | | | 50.0 | 15.24 | S-12 | SS | 18 | 2 | 4 | 4 | 8 | DO #11 (Moist)(Medium Stiff)(Decomposed Siltstone/ Sandstone) |
| 52.5 | 16.00 | | | | | | | | | | | | NO REFUSAL @ 50.0' DRY ON COMPLETION |
| 55.0 | 16.76 | | | | | | | | | | | | |
| 57.5 | 17.53 | | | | | | | | | | | | |
| 60.0 | 18.29 | | | | | | | | | | | | |

REMARKS:

amec foster wheeler — GEOTECHNICAL BRANCH, NASHVILLE, TENNESSEE

LOG OF BORING B-10, SHEET 2 OF 3

PROJECT: ALCOA HIGHWAY WIDENING (SR-115) RETAINING WALLS 7 AND 8 — DRILLER: TRI-STATE DRILLING
PROJECT NO.: 7681-15-002 — ON-SITE REP.: WDS
BORING NO. / LOCATION: STA 5+845, 11.0 m Left — DRY ON COMPLETION ?: YES
DATE: July 22, 2015 — SURFACE ELEV.: 936.2 FT. 285.4 M
REFUSAL: DEPTH NA FT. M — ELEV. FT. M
SAMPLED: 0.0 FT. 0.0 M
TOP OF ROCK: DEPTH NA FT. M — ELEV. FT. M
BEGAN CORING: DEPTH NA FT. M — ELEV. FT. M
FOOTAGE CORED (LF): 0.0 FT. 0.0 M
BOTTOM OF HOLE: DEPTH 50.0 FT. 15.2 M — ELEV. 886.2 FT. 270.1 M
BORING ADVANCED BY: — POWER AUGERING: X — WASHBORING:

WATER LEVEL DATA (IF APPLICABLE): COMPLETION: DEPTH FT. M, ELEV. FT. M; AFTER 24 HRS.: DEPTH FT. M, ELEV. FT. M; LDW AT: DEPTH FT. M, ELEV. FT. M

| STRATUM DEPTH FT. | STRATUM DEPTH M. | SAMPLE DEPTH FROM FT. | SAMPLE DEPTH FROM M. | SAMPLE DEPTH TO FT. | SAMPLE DEPTH TO M. | SAMPLE OR RUN NO. | SAMPLE TYPE | SPLE/CORE RECOV'D (IN.) | "SPT" VALUES 6" | 6" | 6" | N | DESCRIPTION |
|---|---|---|---|---|---|---|---|---|---|---|---|---|---|
| | | 20.0 | 6.10 | | | | | | | | | | |
| 22.5 | 6.86 | | | | | | | | | | | | |
| 25.0 | 7.62 | | | | | | A | | | | | | Sand, silty, clayey, brown (moist) |
| 27.5 | 8.38 | | | | | | | | | | | | |
| 30.0 | 9.14 | | | | | | | | | | | | |
| 32.5 | 9.91 | | | | | | | | | | | | |
| 35.0 | 10.67 | | | | | | | | | | | | |
| 37.5 | 11.43 | | | | | | | | | | | | |
| 40.0 | 12.19 | | | 40.0 | 12.19 | | | | | | | | |

REMARKS: Continued On Page 3.

amec foster wheeler — GEOTECHNICAL BRANCH, NASHVILLE, TENNESSEE

LOG OF BORING B-11, SHEET 1 OF 3

PROJECT: ALCOA HIGHWAY WIDENING (SR-115) RETAINING WALLS 7 AND 8 — DRILLER: TRI-STATE DRILLING
PROJECT NO.: 7681-15-002 — ON-SITE REP.: WDS
BORING NO. / LOCATION: STA 5+860, 11.0 m Left — DRY ON COMPLETION ?: YES
DATE: July 22, 2015 — SURFACE ELEV.: 937.5 FT. 285.8 M
REFUSAL: DEPTH NA FT. M — ELEV. FT. M
SAMPLED: 50.0 FT. 15.2 M
TOP OF ROCK: DEPTH NA FT. M — ELEV. FT. M
BEGAN CORING: DEPTH NA FT. M — ELEV. FT. M
FOOTAGE CORED (LF): 0.0 FT. 0.0 M
BOTTOM OF HOLE: DEPTH 50.0 FT. 15.2 M — ELEV. 887.5 FT. 270.5 M
BORING ADVANCED BY: — POWER AUGERING: X — WASHBORING:

WATER LEVEL DATA (IF APPLICABLE): COMPLETION: DEPTH FT. M, ELEV. FT. M; AFTER 24 HRS.: DEPTH FT. M, ELEV. FT. M; LDW AT: DEPTH FT. M, ELEV. FT. M

| STRATUM DEPTH FT. | STRATUM DEPTH M. | SAMPLE DEPTH FROM FT. | SAMPLE DEPTH FROM M. | SAMPLE DEPTH TO FT. | SAMPLE DEPTH TO M. | SAMPLE OR RUN NO. | SAMPLE TYPE | SPLE/CORE RECOV'D (IN.) | SPT VALUES 6" | 6" | 6" | N | STRATUM DESCRIPTION |
|---|---|---|---|---|---|---|---|---|---|---|---|---|---|
| | | 0.0 | 0.00 | | | | A | | | | | | |
| | | 1.0 | 0.30 | 1.0 | 0.30 | | | | | | | | Clay, sandy, silty, reddish-brown with sandstone fragments |
| 2.5 | 0.76 | | | | | S-1 | SS | 16 | 3 | 3 | 4 | 7 | |
| | | 2.5 | 0.76 | 2.5 | 0.76 | | | | | | | | Clay, sandy, reddish-brown (Moist)(Medium Stiff) |
| | | 3.5 | 1.07 | 3.5 | 1.07 | | A | | | | | | |
| 5.0 | 1.52 | | | | | S-2 | SS | 16 | 3 | 5 | 6 | 11 | DO #1 (Moist)(Stiff) |
| | | 5.0 | 1.52 | 5.0 | 1.52 | | | | | | | | |
| | | 6.0 | 1.83 | 6.0 | 1.83 | | A | | | | | | |
| 7.5 | 2.29 | | | | | S-3 | SS | 18 | 4 | 5 | 10 | 15 | DO1 silty,w sandstone fragments |
| | | 7.5 | 2.29 | 7.5 | 2.29 | | | | | | | | |
| | | 8.5 | 2.59 | 8.5 | 2.59 | | A | | | | | | |
| 10.0 | 3.05 | | | | | S-4 | SS | 16 | 4 | 7 | 10 | 17 | DO1 (Very Stiff) |
| | | 10.0 | 3.05 | 10.0 | 3.05 | | | | | | | | |
| | | | | | | ST-1 | ST | 24 | | | | | Pocket Penetrometer 4.0 TSF |
| 12.5 | 3.81 | | | | | | | | | | | | |
| | | 12.0 | 3.66 | 12.0 | 3.66 | | | | | | | | |
| | | 13.5 | 4.11 | 13.5 | 4.11 | S-5 | SS | 18 | 5 | 7 | 8 | 15 | Sand (M-F), clayey, silty, reddish-brown (Moist)(Medium Dense) |
| 15.0 | 4.57 | | | | | | | | | | | | |
| | | | | | | | A | | | | | | |
| 17.5 | 5.33 | | | | | | | | | | | | |
| | | 18.5 | 5.64 | 18.5 | 5.64 | | | | | | | | |
| 20.0 | 6.10 | | | 20.0 | 6.10 | S-6 | SS | 16 | 4 | 4 | 5 | 9 | DO5 with sandstone fragments (Moist)(Loose) (Decomposed Sandstone) |

REMARKS: Continued On Page 2.

amec foster wheeler — GEOTECHNICAL BRANCH, NASHVILLE, TENNESSEE

LOG OF BORING B-11, SHEET 3 OF 3

PROJECT: ALCOA HIGHWAY WIDENING (SR-115) RETAINING WALLS 7 AND 8 — DRILLER: TRI-STATE DRILLING
PROJECT NO.: 7681-15-002 — ON-SITE REP.: WDS
BORING NO. / LOCATION: STA 5+860, 11.0 m Left — DRY ON COMPLETION ?: YES
DATE: July 22, 2015 — SURFACE ELEV.: 937.5 FT. 285.8 M
REFUSAL: DEPTH NA FT. M — ELEV. FT. M
SAMPLED: 50.0 FT. 15.2 M
TOP OF ROCK: DEPTH NA FT. M — ELEV. FT. M
BEGAN CORING: DEPTH NA FT. M — ELEV. FT. M
FOOTAGE CORED (LF): 0.0 FT. 0.0 M
BOTTOM OF HOLE: DEPTH 50.0 FT. 15.2 M — ELEV. 887.5 FT. 270.5 M
BORING ADVANCED BY: — POWER AUGERING: X — WASHBORING:

WATER LEVEL DATA (IF APPLICABLE): COMPLETION: DEPTH FT. M, ELEV. FT. M; AFTER 24 HRS.: DEPTH FT. M, ELEV. FT. M; LDW AT: DEPTH FT. M, ELEV. FT. M

| STRATUM DEPTH FT. | STRATUM DEPTH M. | SAMPLE DEPTH FROM FT. | SAMPLE DEPTH FROM M. | SAMPLE DEPTH TO FT. | SAMPLE DEPTH TO M. | SAMPLE OR RUN NO. | SAMPLE TYPE | SPLE/CORE RECOV'D (IN.) | SPT VALUES 6" | 6" | 6" | N | DESCRIPTION |
|---|---|---|---|---|---|---|---|---|---|---|---|---|---|
| 42.5 | 12.95 | 40.0 | 12.19 | | | | A | | | | | | |
| | | 43.5 | 13.26 | 43.5 | 13.26 | | | | | | | | |
| 45.0 | 13.72 | 45.0 | 13.72 | 45.0 | 13.72 | S-11 | SS | 18 | 4 | 4 | 7 | 11 | DO7, med dense |
| 47.5 | 14.48 | | | | | | A | | | | | | |
| | | 48.5 | 14.78 | 48.5 | 14.78 | | | | | | | | |
| 50.0 | 15.24 | | | 50.0 | 15.24 | S-12 | SS | 16 | 3 | 4 | 7 | 11 | DO11 |
| 52.5 | 16.00 | | | | | | | | | | | | NO REFUSAL @ 50.0' DRY ON COMPLETION |
| 55.0 | 16.76 | | | | | | | | | | | | |
| 57.5 | 17.53 | | | | | | | | | | | | |
| 60.0 | 18.29 | | | | | | | | | | | | |

REMARKS:

amec foster wheeler — GEOTECHNICAL BRANCH, NASHVILLE, TENNESSEE

LOG OF BORING B-10, SHEET 1 OF 3

PROJECT: ALCOA HIGHWAY WIDENING (SR-115) RETAINING WALLS 7 AND 8 — DRILLER: TRI-STATE DRILLING
PROJECT NO.: 7681-15-002 — ON-SITE REP.: WDS
BORING NO. / LOCATION: STA 5+845, 11.0 m Left — DRY ON COMPLETION ?: YES
DATE: July 22, 2015 — SURFACE ELEV.: 936.2 FT. 285.4 M
REFUSAL: DEPTH NA FT. M — ELEV. FT. M
SAMPLED: 0.0 FT. 0.0 M
TOP OF ROCK: DEPTH NA FT. M — ELEV. FT. M
BEGAN CORING: DEPTH NA FT. M — ELEV. FT. M
FOOTAGE CORED (LF): 0.0 FT. 0.0 M
BOTTOM OF HOLE: DEPTH 50.0 FT. 15.2 M — ELEV. 886.2 FT. 270.1 M
BORING ADVANCED BY: — POWER AUGERING: X — WASHBORING:

WATER LEVEL DATA (IF APPLICABLE): COMPLETION: DEPTH FT. M, ELEV. FT. M; AFTER 24 HRS.: DEPTH FT. M, ELEV. FT. M; LDW AT: DEPTH FT. M, ELEV. FT. M

| STRATUM DEPTH FT. | STRATUM DEPTH M. | SAMPLE DEPTH FROM FT. | SAMPLE DEPTH FROM M. | SAMPLE DEPTH TO FT. | SAMPLE DEPTH TO M. | SAMPLE OR RUN NO. | SAMPLE TYPE | SPLE/CORE RECOV'D (IN.) | "SPT" VALUES 6" | 6" | 6" | N | STRATUM DESCRIPTION |
|---|---|---|---|---|---|---|---|---|---|---|---|---|---|
| | | 0.0 | 0.00 | | | | | | | | | | |
| 2.5 | 0.76 | | | | | | | | | | | | |
| 5.0 | 1.52 | | | | | | | | | | | | |
| 7.5 | 2.29 | | | | | | A | | | | | | Clay, sandy, silty, reddish-brown (Moist) |
| 10.0 | 3.05 | | | | | | | | | | | | |
| 12.5 | 3.81 | | | | | | | | | | | | |
| 15.0 | 4.57 | | | | | | | | | | | | |
| 17.5 | 5.33 | | | | | | | | | | | | |
| | | 18.0 | 5.49 | 18.0 | 5.49 | | | | | | | | |
| 20.0 | 6.10 | | | 20.0 | 6.10 | | | | | | | | Sand, silty, clayey, brown (moist) |

REMARKS: Continued On Page 2.

amec foster wheeler — GEOTECHNICAL BRANCH, NASHVILLE, TENNESSEE

LOG OF BORING B-10, SHEET 3 OF 3

PROJECT: ALCOA HIGHWAY WIDENING (SR-115) RETAINING WALLS 7 AND 8 — DRILLER: TRI-STATE DRILLING
PROJECT NO.: 7681-15-002 — ON-SITE REP.: WDS
BORING NO. / LOCATION: STA 5+845, 11.0 m Left — DRY ON COMPLETION ?: YES
DATE: July 22, 2015 — SURFACE ELEV.: 936.2 FT. 285.4 M
REFUSAL: DEPTH NA FT. M — ELEV. FT. M
SAMPLED: 0.0 FT. 0.0 M
TOP OF ROCK: DEPTH NA FT. M — ELEV. FT. M
BEGAN CORING: DEPTH NA FT. M — ELEV. FT. M
FOOTAGE CORED (LF): 0.0 FT. 0.0 M
BOTTOM OF HOLE: DEPTH 50.0 FT. 15.2 M — ELEV. 886.2 FT. 270.1 M
BORING ADVANCED BY: — POWER AUGERING: X — WASHBORING:

WATER LEVEL DATA (IF APPLICABLE): COMPLETION: DEPTH FT. M, ELEV. FT. M; AFTER 24 HRS.: DEPTH FT. M, ELEV. FT. M; LDW AT: DEPTH FT. M, ELEV. FT. M

| STRATUM DEPTH FT. | STRATUM DEPTH M. | SAMPLE DEPTH FROM FT. | SAMPLE DEPTH FROM M. | SAMPLE DEPTH TO FT. | SAMPLE DEPTH TO M. | SAMPLE OR RUN NO. | SAMPLE TYPE | SPLE/CORE RECOV'D (IN.) | "SPT" VALUES 6" | 6" | 6" | N | DESCRIPTION |
|---|---|---|---|---|---|---|---|---|---|---|---|---|---|
| | | 40.0 | 12.19 | | | | | | | | | | |
| 42.5 | 12.95 | | | | | | | | | | | | |
| 45.0 | 13.72 | | | | | | A | | | | | | Sand, silty, clayey, brown (moist) |
| 47.5 | 14.48 | | | | | | | | | | | | |
| 50.0 | 15.24 | | | 50.0 | 15.24 | | | | | | | | |
| 52.5 | 16.00 | | | | | | | | | | | | NO REFUSAL AT 50' DRY ON COMPLETION |
| 55.0 | 16.76 | | | | | | | | | | | | |
| 57.5 | 17.53 | | | | | | | | | | | | |
| 60.0 | 18.29 | | | | | | | | | | | | |

REMARKS:

amec foster wheeler — GEOTECHNICAL BRANCH, NASHVILLE, TENNESSEE

LOG OF BORING B-11, SHEET 2 OF 3

PROJECT: ALCOA HIGHWAY WIDENING (SR-115) RETAINING WALLS 7 AND 8 — DRILLER: TRI-STATE DRILLING
PROJECT NO.: 7681-15-002 — ON-SITE REP.: WDS
BORING NO. / LOCATION: STA 5+860, 11.0 m Left — DRY ON COMPLETION ?: YES
DATE: July 22, 2015 — SURFACE ELEV.: 937.5 FT. 285.8 M
REFUSAL: DEPTH NA FT. M — ELEV. FT. M
SAMPLED: 50.0 FT. 15.2 M
TOP OF ROCK: DEPTH NA FT. M — ELEV. FT. M
BEGAN CORING: DEPTH NA FT. M — ELEV. FT. M
FOOTAGE CORED (LF): 0.0 FT. 0.0 M
BOTTOM OF HOLE: DEPTH 50.0 FT. 15.2 M — ELEV. 887.5 FT. 270.5 M
BORING ADVANCED BY: — POWER AUGERING: X — WASHBORING:

WATER LEVEL DATA (IF APPLICABLE): COMPLETION: DEPTH FT. M, ELEV. FT. M; AFTER 24 HRS.: DEPTH FT. M, ELEV. FT. M; LDW AT: DEPTH FT. M, ELEV. FT. M

| STRATUM DEPTH FT. | STRATUM DEPTH M. | SAMPLE DEPTH FROM FT. | SAMPLE DEPTH FROM M. | SAMPLE DEPTH TO FT. | SAMPLE DEPTH TO M. | SAMPLE OR RUN NO. | SAMPLE TYPE | SPLE/CORE RECOV'D (IN.) | "SPT" VALUES 6" | 6" | 6" | N | DESCRIPTION |
|---|---|---|---|---|---|---|---|---|---|---|---|---|---|
| | | 20.0 | 6.10 | | | | | | | | | | |
| 22.5 | 6.86 | | | | | | A | | | | | | |
| | | 23.5 | 7.163 | 23.5 | 7.16 | | | | | | | | |
| 25.0 | 7.62 | | | | | S-7 | SS | 14 | 3 | 3 | 5 | 8 | Sand (M-F), silty, dark brown (Moist)(Loose)(Decomposed Sandstone) |
| | | 25.0 | 7.62 | 25.0 | 7.62 | | | | | | | | |
| | | | | | | | A | | | | | | |
| 27.5 | 8.38 | | | | | | | | | | | | |
| | | 28.5 | 8.687 | 28.5 | 8.69 | | | | | | | | |
| 30.0 | 9.14 | | | | | S-8 | SS | 16 | 2 | 3 | 7 | 10 | DO7 |
| | | 30.0 | 9.144 | 30.0 | 9.14 | | | | | | | | |
| | | | | | | | A | | | | | | |
| 32.5 | 9.91 | | | | | | | | | | | | |
| | | 33.5 | 10.21 | 33.5 | 10.21 | | | | | | | | |
| 35.0 | 10.67 | | | | | S-9 | SS | 16 | 4 | 5 | 5 | 10 | DO7 |
| | | 35.0 | 10.67 | 35.0 | 10.67 | | | | | | | | |
| | | | | | | | A | | | | | | |
| 37.5 | 11.43 | | | | | | | | | | | | |
| | | 38.5 | 11.73 | 38.5 | 11.73 | | | | | | | | |
| 40.0 | 12.19 | | | 40.0 | 12.19 | S-10 | SS | 18 | 3 | 5 | 5 | 10 | DO7 |

REMARKS: Continued On Page 3.

amec foster wheeler — GEOTECHNICAL BRANCH, NASHVILLE, TENNESSEE

LOG OF BORING B-12, SHEET 1 OF 5

PROJECT: ALCOA HIGHWAY WIDENING (SR-115) RETAINING WALLS 7 AND 8 — DRILLER: TRI-STATE DRILLING
PROJECT NO.: 7681-15-002 — ON-SITE REP.: WDS
BORING NO. / LOCATION: STA 5+875, 11.0 m Left — DRY ON COMPLETION ?: NO
DATE: July 16, 2015 — SURFACE ELEV.: 936.5 FT. 285.4 M
REFUSAL: DEPTH NA FT. M — ELEV. FT. M
SAMPLED: 0.0 FT. 0.0 M
TOP OF ROCK: DEPTH NA FT. M — ELEV. FT. M
BEGAN CORING: DEPTH NA FT. M — ELEV. FT. M
FOOTAGE CORED (LF): 0.0 FT. M
BOTTOM OF HOLE: DEPTH 83.0 FT. 25.3 M — ELEV. 853.5 FT. 260.1 M
BORING ADVANCED BY: — POWER AUGERING: X — WASHBORING:

WATER LEVEL DATA (IF APPLICABLE): COMPLETION: DEPTH 65.0 FT. 19.8 M, ELEV. 871.5 FT. 265.6 M; AFTER 24 HRS.: DEPTH FT. M, ELEV. FT. M; LDW AT: DEPTH FT. M, ELEV. FT. M

| STRATUM DEPTH FT. | STRATUM DEPTH M. | SAMPLE DEPTH FROM FT. | SAMPLE DEPTH FROM M. | SAMPLE DEPTH TO FT. | SAMPLE DEPTH TO M. | SAMPLE OR RUN NO. | SAMPLE TYPE | SPLE/CORE RECOV'D (IN.) | SPT VALUES 6" | 6" | 6" | N | STRATUM DESCRIPTION |
|---|---|---|---|---|---|---|---|---|---|---|---|---|---|
| | | 0.0 | 0.00 | | | | | | | | | | |
| 2.5 | 0.76 | | | | | | | | | | | | |
| 5.0 | 1.52 | | | | | | | | | | | | |
| 7.5 | 2.29 | | | | | | A | | | | | | Clay, sandy, silty, reddish-brown with sandstone fragments (Moist) |
| 10.0 | 3.05 | | | | | | | | | | | | |
| 12.5 | 3.81 | | | | | | | | | | | | |
| 15.0 | 4.57 | 15.0 | 4.57 | 15.0 | 4.57 | | | | | | | | |
| 17.5 | 5.33 | | | | | | A | | | | | | Sand, silty, clayey, reddish-brown (Moist) Auger penetration approximately 30 seconds per 5 feet |
| 20.0 | 6.10 | | | 20.0 | 6.10 | | | | | | | | |

REMARKS: Continued On Page 2.

CONTRACTOR NOTES:

1. THE GEOTECHNICAL REPORT WHICH INCLUDES DETAILED BORING RECORDS, SOIL AND ROCK TESTING DATA IS AVAILABLE UPON REQUEST. ROCK CORE SAMPLES ARE AVAILABLE FOR INSPECTION BY THE CONTRACTOR.

2. IT IS THE RESPONSIBILITY OF THE CONTRACTOR TO REVIEW THE PLANS, GEOTECHNICAL REPORT, AND BORING LOGS TO BECOME FAMILIAR WITH THE SUBSURFACE CONDITIONS PERTINENT TO THE ASSOCIATED WORK TO BE CONDUCTED BY THE CONTRACTOR. THE CONTRACTOR SHOULD ALSO CONSIDER THEIR EXPERIENCE IN THE PROJECT'S GEOLOGIC AND SUBSURFACE SETTING AND THEIR EXPERIENCE IN DEALING WITH VARIABLE SUBSURFACE CONDITIONS ACROSS A PROJECT SITE TO BASE THEIR BID UPON AND DECISIONS REGARDING APPROPRIATE EQUIPMENT TO BE UTILIZED.

# PRELIMINARY PLANS

SEALED BY

TENNESSEE METRIC D.O.T.

COORDINATES ARE NAD/83(1995), ARE DATUM ADJUSTED BY THE FACTOR OF 1.000 AND TIED TO THE TGRN. ALL ELEVATIONS ARE REFERENCED TO THE NAVD 1988.

STATE OF TENNESSEE
DEPARTMENT OF TRANSPORTATION

SOIL BORING LOGS
RETAINING WALLS
NO. 7 AND 8

SCALE: AS NOTED

9/9/2015
R:_Infrastructure Project Files\2015 Infra Projects\7681-15-002 ALCOA Hwy (SR 115) WALLS 7 AND 8\06 - CADD\03-23 RETAINING WALL NO. 7 AND 8 SOIL BORING LOGS.SHT

| TYPE | YEAR | PROJECT NO. | SHEET NO. |
|---|---|---|---|
| CONST. | 2015 | 47026-3279-14 | ---- |

amec foster wheeler — GEOTECHNICAL BRANCH, NASHVILLE, TENNESSEE

LOG OF BORING B-12, SHEET 2 OF 5

PROJECT: ALCOA HIGHWAY WIDENING (SR-115) RETAINING WALLS 7 AND 8 — DRILLER: TRI-STATE DRILLING
PROJECT NO.: 7681-15-002 — ON-SITE REP.: WDS
BORING NO. / LOCATION: STA 5+875, 11.0 m Left — DRY ON COMPLETION ?: NO
DATE: July 16, 2015 — SURFACE ELEV.: 936.5 FT. 285.4 M
REFUSAL: DEPTH NA FT. M ELEV. FT. M
SAMPLED 0.0 FT. 0.0 M
TOP OF ROCK: DEPTH NA FT. M ELEV. FT. M
BEGAN CORING: DEPTH NA FT. M ELEV. FT. M
FOOTAGE CORED (LF): 0.0 FT. 0.0 M
BOTTOM OF HOLE: DEPTH 83.0 FT. 25.3 M ELEV. 853.5 FT. 260.1 M
BORING ADVANCED BY: POWER AUGERING X WASHBORING

WATER LEVEL DATA (IF APPLICABLE)
COMPLETION: DEPTH 65.0 FT. 19.8 M; ELEV. 871.5 FT. 265.6 M
AFTER 24 HRS.: DEPTH FT. M; ELEV. FT. M
LDW AT: DEPTH FT. M; ELEV. FT. M

| STRATUM DEPTH FT. | STRATUM DEPTH M. | SAMPLE DEPTH FROM FT. | SAMPLE DEPTH FROM M. | SAMPLE DEPTH TO FT. | SAMPLE DEPTH TO M. | SAMPLE OR RUN NO. | SAMPLE TYPE | SPLE/CORE RECOV'D (IN.) | SPT VALUES 6" | 6" | 6" | N | DESCRIPTION |
|---|---|---|---|---|---|---|---|---|---|---|---|---|---|
| | | 20.0 | 6.10 | | | | | | | | | | Sand, silty, clayey, reddish-brown (Moist) |
| 22.5 | 6.86 | | | | | | | | | | | | |
| 25.0 | 7.62 | | | | | | | | | | | | |
| 27.5 | 8.38 | | | | | | | | | | | | |
| 30.0 | 9.14 | | | | | | A | | | | | | |
| 32.5 | 9.91 | | | | | | | | | | | | |
| 35.0 | 10.67 | | | | | | | | | | | | |
| 37.5 | 11.43 | | | | | | | | | | | | |
| 40.0 | 12.19 | | | 40.0 | 12.19 | | | | | | | | |

REMARKS: Continued On Page 3.

amec foster wheeler — GEOTECHNICAL BRANCH, NASHVILLE, TENNESSEE

LOG OF BORING B-12, SHEET 4 OF 5

PROJECT: ALCOA HIGHWAY WIDENING (SR-115) RETAINING WALLS 7 AND 8 — DRILLER: TRI-STATE DRILLING
PROJECT NO.: 7681-15-002 — ON-SITE REP.: WDS
BORING NO. / LOCATION: STA 5+875, 11.0 m Left — DRY ON COMPLETION ?: NO
DATE: July 16, 2015 — SURFACE ELEV.: 936.5 FT. 285.4 M
REFUSAL: DEPTH NA FT. M ELEV. FT. M
SAMPLED 0.0 FT. 0.0 M
TOP OF ROCK: DEPTH NA FT. M ELEV. FT. M
BEGAN CORING: DEPTH NA FT. M ELEV. FT. M
FOOTAGE CORED (LF): 0.0 FT. 0.0 M
BOTTOM OF HOLE: DEPTH 83.0 FT. 25.3 M ELEV. 853.5 FT. 260.1 M
BORING ADVANCED BY: POWER AUGERING X WASHBORING

WATER LEVEL DATA (IF APPLICABLE)
COMPLETION: DEPTH 65.0 FT. 19.8 M; ELEV. 871.5 FT. 265.6 M
AFTER 24 HRS.: DEPTH FT. M; ELEV. FT. M
LDW AT: DEPTH FT. M; ELEV. FT. M

| STRATUM DEPTH FT. | STRATUM DEPTH M. | SAMPLE DEPTH FROM FT. | SAMPLE DEPTH FROM M. | SAMPLE DEPTH TO FT. | SAMPLE DEPTH TO M. | SAMPLE OR RUN NO. | SAMPLE TYPE | SPLE/CORE RECOV'D (IN.) | SPT VALUES 6" | 6" | 6" | N | DESCRIPTION |
|---|---|---|---|---|---|---|---|---|---|---|---|---|---|
| | | 60.0 | 18.29 | | | | | | | | | | Sand, slightly silty, reddish-brown with sandstone fragments (moist) |
| 62.5 | 19.05 | | | | | | | | | | | | |
| 65.0 | 19.81 | | | | | | | | | | | | |
| 67.5 | 20.57 | | | | | | A | | | | | | |
| 70.0 | 21.33 | | | | | | | | | | | | |
| 72.5 | 22.10 | | | | | | | | | | | | |
| 75.0 | 22.86 | 75.0 | 22.86 | 75.0 | 22.86 | | | | | | | | |
| 77.5 | 23.62 | | | | | | A | | | | | | Weathered rock, irregular hardness |
| 80.0 | 24.38 | | | 80.0 | 24.38 | | | | | | | | |

REMARKS: Continued On Page 5.

amec foster wheeler — GEOTECHNICAL BRANCH, NASHVILLE, TENNESSEE

LOG OF BORING B-13, SHEET 1 OF 3

PROJECT: ALCOA HIGHWAY WIDENING (SR-115) RETAINING WALLS 7 AND 8 — DRILLER: TRI-STATE DRILLING
PROJECT NO.: 7681-15-002 — ON-SITE REP.: WDS
BORING NO. / LOCATION: STA 5+890, 9.4 m Left — DRY ON COMPLETION ?: YES
DATE: 7/17/2015 to 7/21/2015 — SURFACE ELEV.: 929.5 FT. 283.3 M
REFUSAL: DEPTH NA FT. M ELEV. FT. M
SAMPLED 50.0 FT. 15.2 M
TOP OF ROCK: DEPTH NA FT. M ELEV. FT. M
BEGAN CORING: DEPTH NA FT. M ELEV. FT. M
FOOTAGE CORED (LF): 0.0 FT. 0.0 M
BOTTOM OF HOLE: DEPTH 50.0 FT. 15.2 M ELEV. 879.5 FT. 268.1 M
BORING ADVANCED BY: POWER AUGERING X WASHBORING

WATER LEVEL DATA (IF APPLICABLE)
COMPLETION: DEPTH FT. M; ELEV. FT. M
AFTER 24 HRS.: DEPTH FT. M; ELEV. FT. M
LDW AT: DEPTH FT. M; ELEV. FT. M

| STRATUM DEPTH FT. | STRATUM DEPTH M. | SAMPLE DEPTH FROM FT. | SAMPLE DEPTH FROM M. | SAMPLE DEPTH TO FT. | SAMPLE DEPTH TO M. | SAMPLE OR RUN NO. | SAMPLE TYPE | SPLE/CORE RECOV'D (IN.) | SPT VALUES 6" | 6" | 6" | N | STRATUM DESCRIPTION |
|---|---|---|---|---|---|---|---|---|---|---|---|---|---|
| | | 0.0 | 0.00 | 1.0 | 0.30 | | A | | | | | | Clay, sandy, silty, reddish-brown with asphalt (Fill) |
| | | 1.0 | 0.30 | 2.5 | 0.76 | S-1 | SS | 18 | 2 | 3 | 4 | 7 | Clay, sandy, silty, reddish-brown with sandstone fragments (Moist)(Medium Stiff) |
| 2.5 | 0.76 | 2.5 | 0.76 | 3.5 | 1.07 | | A | | | | | | |
| | | 3.5 | 1.07 | 5.0 | 1.52 | S-2 | SS | 2 | 3 | 5 | 5 | 10 | DO1, stiff |
| 5.0 | 1.52 | 5.0 | 1.52 | 6.0 | 1.83 | | A | | | | | | |
| | | 6.0 | 1.83 | 7.5 | 2.29 | S-3 | SS | 14 | 4 | 5 | 7 | 12 | DO2 |
| 7.5 | 2.29 | 7.5 | 2.29 | 8.5 | 2.59 | | A | | | | | | |
| | | 8.5 | 2.59 | 10.0 | 3.05 | S-4 | SS | 14 | 3 | 5 | 9 | 14 | DO2 mottled yellowish-brown |
| 10.0 | 3.05 | 10.0 | 3.05 | | | | | | | | | | |
| | | | | | | | A | | | | | | |
| 12.5 | 3.81 | | | 13.5 | 4.11 | | | | | | | | |
| | | 13.5 | 4.11 | 15.0 | 4.57 | S-5 | SS | 12 | 3 | 4 | 4 | 8 | Sand (M), silty, slightly clayey, brown mottled yellowish-brown/ reddish-brown (moist)(Loose) |
| 15.0 | 4.57 | 15.0 | 4.57 | | | | | | | | | | |
| | | | | | | | A | | | | | | |
| 17.5 | 5.33 | | | 18.5 | 5.64 | | | | | | | | |
| | | 18.5 | 5.64 | 20.0 | 6.10 | S-6 | SS | 18 | 4 | 6 | 9 | 15 | DO5, med dense |
| 20.0 | 6.10 | | | | | | | | | | | | |

REMARKS: Continued On Page 2.

amec foster wheeler — GEOTECHNICAL BRANCH, NASHVILLE, TENNESSEE

LOG OF BORING B-14, SHEET 2 OF 3

PROJECT: ALCOA HIGHWAY WIDENING (SR-115) RETAINING WALLS 7 AND 8 — DRILLER: TRI-STATE DRILLING
PROJECT NO.: 7681-15-002 — ON-SITE REP.: WDS
BORING NO. / LOCATION: STATION 5+905, 11.0 m Left — DRY ON COMPLETION ?: YES
DATE: July 13, 2015 — SURFACE ELEV.: 928.7 FT. 283.1 M
REFUSAL: DEPTH NA FT. M ELEV. FT. M
SAMPLED 0.0 FT. 0.0 M
TOP OF ROCK: DEPTH NA FT. M ELEV. FT. M
BEGAN CORING: DEPTH NA FT. M ELEV. FT. M
FOOTAGE CORED (LF): 0.0 FT. 0.0 M
BOTTOM OF HOLE: DEPTH 50.0 FT. 15.2 M ELEV. 878.7 FT. 267.8 M
BORING ADVANCED BY: POWER AUGERING X WASHBORING

WATER LEVEL DATA (IF APPLICABLE)
COMPLETION: DEPTH FT. M; ELEV. FT. M
AFTER 24 HRS.: DEPTH FT. M; ELEV. FT. M
LDW AT: DEPTH FT. M; ELEV. FT. M

| STRATUM DEPTH FT. | STRATUM DEPTH M. | SAMPLE DEPTH FROM FT. | SAMPLE DEPTH FROM M. | SAMPLE DEPTH TO FT. | SAMPLE DEPTH TO M. | SAMPLE OR RUN NO. | SAMPLE TYPE | SPLE/CORE RECOV'D (IN.) | SPT VALUES 6" | 6" | 6" | N | DESCRIPTION |
|---|---|---|---|---|---|---|---|---|---|---|---|---|---|
| | | 20.0 | 6.10 | | | | | | | | | | Sand, silty, clayey, reddish-brown (Moist) |
| 22.5 | 6.86 | | | | | | | | | | | | |
| 25.0 | 7.62 | | | | | | | | | | | | |
| 27.5 | 8.38 | | | | | | A | | | | | | |
| 30.0 | 9.14 | | | | | | | | | | | | |
| 32.5 | 9.91 | | | | | | | | | | | | |
| 35.0 | 10.67 | | | | | | | | | | | | |
| 37.5 | 11.43 | | | | | | | | | | | | |
| 40.0 | 12.19 | | | 40.0 | 12.19 | | | | | | | | |

REMARKS: Continued On Page 3.

amec foster wheeler — GEOTECHNICAL BRANCH, NASHVILLE, TENNESSEE

LOG OF BORING B-12, SHEET 3 OF 5

PROJECT: ALCOA HIGHWAY WIDENING (SR-115) RETAINING WALLS 7 AND 8 — DRILLER: TRI-STATE DRILLING
PROJECT NO.: 7681-15-002 — ON-SITE REP.: WDS
BORING NO. / LOCATION: STA 5+875, 11.0 m Left — DRY ON COMPLETION ?: NO
DATE: July 16, 2015 — SURFACE ELEV.: 936.5 FT. 285.4 M
REFUSAL: DEPTH NA FT. M ELEV. FT. M
SAMPLED 0.0 FT. 0.0 M
TOP OF ROCK: DEPTH NA FT. M ELEV. FT. M
BEGAN CORING: DEPTH NA FT. M ELEV. FT. M
FOOTAGE CORED (LF): 0.0 FT. 0.0 M
BOTTOM OF HOLE: DEPTH 83.0 FT. 25.3 M ELEV. 853.5 FT. 260.1 M
BORING ADVANCED BY: POWER AUGERING X WASHBORING

WATER LEVEL DATA (IF APPLICABLE)
COMPLETION: DEPTH 65.0 FT. 19.8 M; ELEV. 871.5 FT. 265.6 M
AFTER 24 HRS.: DEPTH FT. M; ELEV. FT. M
LDW AT: DEPTH FT. M; ELEV. FT. M

| STRATUM DEPTH FT. | STRATUM DEPTH M. | SAMPLE DEPTH FROM FT. | SAMPLE DEPTH FROM M. | SAMPLE DEPTH TO FT. | SAMPLE DEPTH TO M. | SAMPLE OR RUN NO. | SAMPLE TYPE | SPLE/CORE RECOV'D (IN.) | SPT VALUES 6" | 6" | 6" | N | DESCRIPTION |
|---|---|---|---|---|---|---|---|---|---|---|---|---|---|
| | | 40.0 | 12.19 | | | | | | | | | | |
| 42.5 | 12.95 | | | | | | | | | | | | |
| 45.0 | 13.72 | | | | | | | | | | | | |
| 47.5 | 14.48 | | | | | | | | | | | | |
| 50.0 | 15.24 | | | | | | A | | | | | | Sand, slightly silty, reddish-brown with sandstone fragments (moist) Auger penetration approximately 30 seconds per 5 feet |
| 52.5 | 16.00 | | | | | | | | | | | | |
| 55.0 | 16.76 | | | | | | | | | | | | |
| 57.5 | 17.53 | | | | | | | | | | | | |
| 60.0 | 18.29 | | | 60.0 | 18.29 | | | | | | | | |

REMARKS: Continued On Page 4.

amec foster wheeler — GEOTECHNICAL BRANCH, NASHVILLE, TENNESSEE

LOG OF BORING B-12, SHEET 5 OF 5

PROJECT: ALCOA HIGHWAY WIDENING (SR-115) RETAINING WALLS 7 AND 8 — DRILLER: TRI-STATE DRILLING
PROJECT NO.: 7681-15-002 — ON-SITE REP.: WDS
BORING NO. / LOCATION: STA 5+875, 11.0 m Left — DRY ON COMPLETION ?: NO
DATE: July 16, 2015 — SURFACE ELEV.: 936.5 FT. 285.4 M
REFUSAL: DEPTH NA FT. M ELEV. FT. M
SAMPLED 0.0 FT. 0.0 M
TOP OF ROCK: DEPTH NA FT. M ELEV. FT. M
BEGAN CORING: DEPTH NA FT. M ELEV. FT. M
FOOTAGE CORED (LF): 0.0 FT. 0.0 M
BOTTOM OF HOLE: DEPTH 83.0 FT. 25.3 M ELEV. 853.5 FT. 260.1 M
BORING ADVANCED BY: POWER AUGERING X WASHBORING

WATER LEVEL DATA (IF APPLICABLE)
COMPLETION: DEPTH 65.0 FT. 19.8 M; ELEV. 871.5 FT. 265.6 M
AFTER 24 HRS.: DEPTH FT. M; ELEV. FT. M
LDW AT: DEPTH FT. M; ELEV. FT. M

| STRATUM DEPTH FT. | STRATUM DEPTH M. | SAMPLE DEPTH FROM FT. | SAMPLE DEPTH FROM M. | SAMPLE DEPTH TO FT. | SAMPLE DEPTH TO M. | SAMPLE OR RUN NO. | SAMPLE TYPE | SPLE/CORE RECOV'D (IN.) | SPT VALUES 6" | 6" | 6" | N | DESCRIPTION |
|---|---|---|---|---|---|---|---|---|---|---|---|---|---|
| | | 80.0 | 24.38 | | | | | | | | | | |
| | | | | | | | A | | | | | | Weathered rock, irregular hardness |
| 82.5 | 25.15 | | | | | | | | | | | | |
| | | | | 83.0 | 25.30 | | | | | | | | |
| 85.0 | 25.91 | | | | | | | | | | | | BORING TERMINATED @ 83' WATER AT 65' ON COMPLETION |
| 87.5 | 26.67 | | | | | | | | | | | | |
| 90.0 | 27.43 | | | | | | | | | | | | |
| 92.5 | 28.19 | | | | | | | | | | | | |
| 95.0 | 28.96 | | | | | | | | | | | | |
| 97.5 | 29.72 | | | | | | | | | | | | |
| 100.0 | 30.48 | | | | | | | | | | | | |

REMARKS:

amec foster wheeler — GEOTECHNICAL BRANCH, NASHVILLE, TENNESSEE

LOG OF BORING B-14, SHEET 1 OF 3

PROJECT: ALCOA HIGHWAY WIDENING (SR-115) RETAINING WALLS 7 AND 8 — DRILLER: TRI-STATE DRILLING
PROJECT NO.: 7681-15-002 — ON-SITE REP.: WDS
BORING NO. / LOCATION: STATION 5+905, 11.0 m Left — DRY ON COMPLETION ?: YES
DATE: July 13, 2015 — SURFACE ELEV.: 928.7 FT. 283.1 M
REFUSAL: DEPTH NA FT. M ELEV. FT. M
SAMPLED 0.0 FT. 0.0 M
TOP OF ROCK: DEPTH NA FT. M ELEV. FT. M
BEGAN CORING: DEPTH NA FT. M ELEV. FT. M
FOOTAGE CORED (LF): 0.0 FT. 0.0 M
BOTTOM OF HOLE: DEPTH 50.0 FT. 15.2 M ELEV. 878.7 FT. 267.8 M
BORING ADVANCED BY: POWER AUGERING X WASHBORING

WATER LEVEL DATA (IF APPLICABLE)
COMPLETION: DEPTH FT. M; ELEV. FT. M
AFTER 24 HRS.: DEPTH FT. M; ELEV. FT. M
LDW AT: DEPTH FT. M; ELEV. FT. M

| STRATUM DEPTH FT. | STRATUM DEPTH M. | SAMPLE DEPTH FROM FT. | SAMPLE DEPTH FROM M. | SAMPLE DEPTH TO FT. | SAMPLE DEPTH TO M. | SAMPLE OR RUN NO. | SAMPLE TYPE | SPLE/CORE RECOV'D (IN.) | SPT VALUES 6" | 6" | 6" | N | STRATUM DESCRIPTION |
|---|---|---|---|---|---|---|---|---|---|---|---|---|---|
| | | 0.0 | 0.00 | | | | | | | | | | |
| 2.5 | 0.76 | | | | | | | | | | | | |
| 5.0 | 1.52 | | | | | | | | | | | | |
| 7.5 | 2.29 | | | | | | A | | | | | | Clay, sandy, silty, reddish-brown with sandstone fragments (Moist) |
| 10.0 | 3.05 | | | | | | | | | | | | |
| 12.5 | 3.81 | | | | | | | | | | | | |
| 15.0 | 4.57 | 15.0 | 4.57 | 15.0 | 4.57 | | | | | | | | |
| 17.5 | 5.33 | | | | | | A | | | | | | Sand, silty, clayey, reddish-brown (Moist) 5 foot intervals each 30 seconds to 50 feet |
| 20.0 | 6.10 | | | 20.0 | 6.10 | | | | | | | | |

REMARKS: Continued On Page 2.

amec foster wheeler — GEOTECHNICAL BRANCH, NASHVILLE, TENNESSEE

LOG OF BORING B-14, SHEET 3 OF 3

PROJECT: ALCOA HIGHWAY WIDENING (SR-115) RETAINING WALLS 7 AND 8 — DRILLER: TRI-STATE DRILLING
PROJECT NO.: 7681-15-002 — ON-SITE REP.: WDS
BORING NO. / LOCATION: STATION 5+905, 11.0 m Left — DRY ON COMPLETION ?: YES
DATE: July 13, 2015 — SURFACE ELEV.: 928.7 FT. 283.1 M
REFUSAL: DEPTH NA FT. M ELEV. FT. M
SAMPLED 0.0 FT. 0.0 M
TOP OF ROCK: DEPTH NA FT. M ELEV. FT. M
BEGAN CORING: DEPTH NA FT. M ELEV. FT. M
FOOTAGE CORED (LF): 0.0 FT. 0.0 M
BOTTOM OF HOLE: DEPTH 50.0 FT. 15.2 M ELEV. 878.7 FT. 267.8 M
BORING ADVANCED BY: POWER AUGERING X WASHBORING

WATER LEVEL DATA (IF APPLICABLE)
COMPLETION: DEPTH FT. M; ELEV. FT. M
AFTER 24 HRS.: DEPTH FT. M; ELEV. FT. M
LDW AT: DEPTH FT. M; ELEV. FT. M

| STRATUM DEPTH FT. | STRATUM DEPTH M. | SAMPLE DEPTH FROM FT. | SAMPLE DEPTH FROM M. | SAMPLE DEPTH TO FT. | SAMPLE DEPTH TO M. | SAMPLE OR RUN NO. | SAMPLE TYPE | SPLE/CORE RECOV'D (IN.) | SPT VALUES 6" | 6" | 6" | N | DESCRIPTION |
|---|---|---|---|---|---|---|---|---|---|---|---|---|---|
| | | 40.0 | 12.19 | | | | | | | | | | Sand, silty, clayey, reddish-brown (Moist) |
| 42.5 | 12.95 | | | | | | | | | | | | |
| 45.0 | 13.72 | | | | | | A | | | | | | |
| 47.5 | 14.48 | | | | | | | | | | | | |
| 50.0 | 15.24 | | | 50.0 | 15.24 | | | | | | | | BORING TERMINATED @ 50' DRY ON COMPLETION |
| 52.5 | 16.00 | | | | | | | | | | | | |
| 55.0 | 16.76 | | | | | | | | | | | | |
| 57.5 | 17.53 | | | | | | | | | | | | |
| 60.0 | 18.29 | | | | | | | | | | | | |

REMARKS:

# PRELIMINARY PLANS

SEALED BY

TENNESSEE METRIC D.O.T.

COORDINATES ARE NAD/83(1995), ARE DATUM ADJUSTED BY THE FACTOR OF 1.000 AND TIED TO THE TGRN. ALL ELEVATIONS ARE REFERENCED TO THE NAVD 1988.

STATE OF TENNESSEE
DEPARTMENT OF TRANSPORTATION

## SOIL BORING LOGS RETAINING WALLS NO. 7 AND 8

SCALE: AS NOTED

CONTRACTOR NOTES:

1. THE GEOTECHNICAL REPORT WHICH INCLUDES DETAILED BORING RECORDS, SOIL AND ROCK TESTING DATA IS AVAILABLE UPON REQUEST. ROCK CORE SAMPLES ARE AVAILABLE FOR INSPECTION BY THE CONTRACTOR.

2. IT IS THE RESPONSIBILITY OF THE CONTRACTOR TO REVIEW THE PLANS, GEOTECHNICAL REPORT, AND BORING LOGS TO BECOME FAMILIAR WITH THE SUBSURFACE CONDITIONS PERTINENT TO THE ASSOCIATED WORK TO BE CONDUCTED BY THE CONTRACTOR. THE CONTRACTOR SHOULD ALSO CONSIDER THEIR EXPERIENCE IN THE PROJECT'S GEOLOGIC AND SUBSURFACE SETTING AND THEIR EXPERIENCE IN DEALING WITH VARIABLE SUBSURFACE CONDITIONS ACROSS A PROJECT SITE TO BASE THEIR BID UPON AND DECISIONS REGARDING APPROPRIATE EQUIPMENT TO BE UTILIZED.

9/9/2015
R:_Infrastructure Project Files\2015 Infra Projects\7681-15-002 ALCOA Hwy (SR 115) WALLS 7 AND 8\06 - CADD\03-23 RETAINING WALL NO. 7 AND 8 SOIL BORING LOGS.SHT

| TYPE | YEAR | PROJECT NO. | SHEET NO. |
|---|---|---|---|
| CONST. | 2015 | 47026-3279-14 | ---- |

amec foster wheeler — GEOTECHNICAL BRANCH, NASHVILLE, TENNESSEE

LOG OF BORING B-15, SHEET 1 OF 4

PROJECT: ALCOA HIGHWAY WIDENING (SR-115) RETAINING WALLS 7 AND 8 — DRILLER: TRI-STATE DRILLING
PROJECT NO.: 7681-15-002 — ON-SITE REP.: WDS
BORING NO. / LOCATION: STA 5+920, 8.1 m Left — DRY ON COMPLETION ?: NO

DATE: July 16, 2015 — SURFACE ELEV.: 919.0 FT. / 280.1 M
REFUSAL: DEPTH NA FT. / M — ELEV. FT. / M
SAMPLED: 80.0 FT. / 24.4 M
TOP OF ROCK: DEPTH NA FT. / M — ELEV. FT. / M
BEGAN CORING: DEPTH NA FT. / M — ELEV. FT. / M
FOOTAGE CORED (LF): 0.0 FT. / 0.0 M
BOTTOM OF HOLE: DEPTH 80.0 FT. / 24.4 M — ELEV. 839.0 FT. / 255.7 M

WATER LEVEL DATA (IF APPLICABLE)
COMPLETION: DEPTH 70.0 FT. / 21.3 M — ELEV. 849.0 FT. / 258.8 M
AFTER 24 HRS.: DEPTH FT. / M — ELEV. FT. / M
LDW AT: DEPTH FT. / M — ELEV. FT. / M

BORING ADVANCED BY: — POWER AUGERING: X — WASHBORING:

| STRATUM DEPTH FT. | STRATUM DEPTH M. | SAMPLE DEPTH FROM FT. | SAMPLE DEPTH FROM M. | SAMPLE DEPTH TO FT. | SAMPLE DEPTH TO M. | SAMPLE OR RUN NO. | SAMPLE TYPE | SPLE/CORE RECOV'D (IN.) | SPT VALUES 6" | 6" | 6" | N | STRATUM DESCRIPTION |
|---|---|---|---|---|---|---|---|---|---|---|---|---|---|
| | | 0.0 | 0.00 | 1.0 | 0.30 | | A | | | | | | Clay, sandy, silty, reddish-brown with asphalt (Fill) |
| | | 1.0 | 0.30 | 2.5 | 0.76 | S-1 | SS | 16 | 2 | 2 | 3 | 5 | Clay, sandy, silty, reddish-brown (Moist)(Medium Stiff) |
| 2.5 | 0.76 | 2.5 | 0.76 | 3.5 | 1.07 | | A | | | | | | |
| | | 3.5 | 1.07 | 5.0 | 1.52 | S-2 | SS | 16 | 2 | 3 | 3 | 6 | DO1 |
| 5.0 | 1.52 | 5.0 | 1.52 | 6.0 | 1.83 | | A | | | | | | |
| | | 6.0 | 1.83 | 7.5 | 2.29 | S-3 | SS | 16 | 3 | 4 | 4 | 8 | DO1 |
| 7.5 | 2.29 | 7.5 | 2.29 | 8.5 | 2.59 | | A | | | | | | |
| | | 8.5 | 2.59 | 10.0 | 3.05 | S-4 | SS | 18 | 3 | 4 | 6 | 10 | Sand (M), silty, clayey, reddish-brown (Moist)(Loose) |
| 10.0 | 3.05 | 10.0 | 3.05 | | | | | | | | | | |
| 12.5 | 3.81 | | | | | | A | | | | | | |
| | | 13.5 | 4.11 | 15.0 | 4.57 | S-5 | SS | 18 | 4 | 6 | 7 | 13 | DO4 (Medium Dense) |
| 15.0 | 4.57 | 15.0 | 4.57 | | | | | | | | | | |
| 17.5 | 5.33 | | | | | | A | | | | | | |
| | | 18.5 | 5.64 | 20.0 | 6.10 | S-6 | SS | 16 | 6 | 5 | 6 | 11 | Sand (M), silty, slightly clayey, reddish-brown with sandstone fragments (Moist)(Medium Dense) (Decomposed Sandstone) |
| 20.0 | 6.10 | | | | | | | | | | | | |

REMARKS: Continued On Page 2.

amec foster wheeler — GEOTECHNICAL BRANCH, NASHVILLE, TENNESSEE

LOG OF BORING B-15, SHEET 3 OF 4

PROJECT: ALCOA HIGHWAY WIDENING (SR-115) RETAINING WALLS 7 AND 8 — DRILLER: TRI-STATE DRILLING
PROJECT NO.: 7681-15-002 — ON-SITE REP.: WDS
BORING NO. / LOCATION: STA 5+920, 8.1 m Left — DRY ON COMPLETION ?: NO

DATE: July 16, 2015 — SURFACE ELEV.: 919.0 FT. / 280.1 M
REFUSAL: DEPTH NA FT. / M — ELEV. FT. / M
SAMPLED: 80.0 FT. / 24.4 M
TOP OF ROCK: DEPTH NA FT. / M — ELEV. FT. / M
BEGAN CORING: DEPTH NA FT. / M — ELEV. FT. / M
FOOTAGE CORED (LF): 0.0 FT. / 0.0 M
BOTTOM OF HOLE: DEPTH 80.0 FT. / 24.4 M — ELEV. 839.0 FT. / 255.7 M

WATER LEVEL DATA (IF APPLICABLE)
COMPLETION: DEPTH 70.0 FT. / 21.3 M — ELEV. 849.0 FT. / 258.8 M
AFTER 24 HRS.: DEPTH FT. / M — ELEV. FT. / M
LDW AT: DEPTH FT. / M — ELEV. FT. / M

BORING ADVANCED BY: — POWER AUGERING: X — WASHBORING:

| STRATUM DEPTH FT. | STRATUM DEPTH M. | SAMPLE DEPTH FROM FT. | SAMPLE DEPTH FROM M. | SAMPLE DEPTH TO FT. | SAMPLE DEPTH TO M. | SAMPLE OR RUN NO. | SAMPLE TYPE | SPLE/CORE RECOV'D (IN.) | "SPT" VALUES 6" | 6" | 6" | N | DESCRIPTION |
|---|---|---|---|---|---|---|---|---|---|---|---|---|---|
| | | 40.0 | 12.19 | | | | | | | | | | |
| | | | | 43.5 | 13.26 | | A | | | | | | |
| 42.5 | 12.95 | | | | | | | | | | | | |
| | | 43.5 | 13.26 | 45.0 | 13.72 | S-11 | SS | 16 | 4 | 5 | 4 | 9 | DO10 (moist)(Loose) (Decomposed Sandstone) |
| 45.0 | 13.72 | 45.0 | 13.72 | | | | | | | | | | |
| | | | | 48.5 | 14.78 | | A | | | | | | |
| 47.5 | 14.48 | | | | | | | | | | | | |
| | | 48.5 | 14.78 | 50.0 | 15.24 | S-12 | SS | 16 | 6 | 6 | 7 | 13 | Sand (M), silty, reddish-brown with sandstone fragments (moist)(Medium Dense) (Decomposed Sandstone) |
| 50.0 | 15.24 | 50.0 | 15.24 | | | | | | | | | | |
| 52.5 | 16.00 | | | | | | | | | | | | |
| | | | | 60.0 | 18.29 | | A | | | | | | Sand (M), silty, reddish-brown with sandstone fragments (moist) Auger penetration to 80' averages 30 seconds per 5 feet |
| 55.0 | 16.76 | | | | | | | | | | | | |
| 57.5 | 17.53 | | | | | | | | | | | | |
| 60.0 | 18.29 | | | | | | | | | | | | |

REMARKS: Continued On Page 4.

amec foster wheeler — GEOTECHNICAL BRANCH, NASHVILLE, TENNESSEE

LOG OF BORING B-16, SHEET 1 OF 3

PROJECT: ALCOA HIGHWAY WIDENING (SR-115) RETAINING WALLS 7 AND 8 — DRILLER: TRI-STATE DRILLING
PROJECT NO.: 7681-15-002 — ON-SITE REP.: WDS
BORING NO. / LOCATION: STATION 5+935, 10.5 m Left — DRY ON COMPLETION ?: YES

DATE: July 13, 2015 — SURFACE ELEV.: 922.0 FT. / 281.0 M
REFUSAL: DEPTH NA FT. / M — ELEV. FT. / M
SAMPLED: 0.0 FT. / 0.0 M
TOP OF ROCK: DEPTH NA FT. / M — ELEV. FT. / M
BEGAN CORING: DEPTH NA FT. / M — ELEV. FT. / M
FOOTAGE CORED (LF): 0.0 FT. / 0.0 M
BOTTOM OF HOLE: DEPTH 45.0 FT. / 13.7 M — ELEV. 877.0 FT. / 267.3 M

WATER LEVEL DATA (IF APPLICABLE)
COMPLETION: DEPTH FT. / M — ELEV. FT. / M
AFTER 24 HRS.: DEPTH FT. / M — ELEV. FT. / M
LDW AT: DEPTH FT. / M — ELEV. FT. / M

BORING ADVANCED BY: — POWER AUGERING: X — WASHBORING:

| STRATUM DEPTH FT. | STRATUM DEPTH M. | SAMPLE DEPTH FROM FT. | SAMPLE DEPTH FROM M. | SAMPLE DEPTH TO FT. | SAMPLE DEPTH TO M. | SAMPLE OR RUN NO. | SAMPLE TYPE | SPLE/CORE RECOV'D (IN.) | SPT VALUES 6" | 6" | 6" | N | STRATUM DESCRIPTION |
|---|---|---|---|---|---|---|---|---|---|---|---|---|---|
| | | 0.0 | 0.00 | | | | | | | | | | Boring located on cut bench |
| 2.5 | 0.76 | | | | | | | | | | | | |
| 5.0 | 1.52 | | | | | | | | | | | | |
| 7.5 | 2.29 | | | | | | | | | | | | |
| 10.0 | 3.05 | | | | | | A | | | | | | Clay, sandy, silty, reddish-brown with sandstone fragments (Moist) |
| 12.5 | 3.81 | | | | | | | | | | | | |
| 15.0 | 4.57 | | | | | | | | | | | | |
| 17.5 | 5.33 | | | | | | | | | | | | |
| | | 20.0 | 6.10 | | | | | | | | | | |
| 20.0 | 6.10 | | | | | | | | | | | | |

REMARKS: Continued On Page 2.

amec foster wheeler — GEOTECHNICAL BRANCH, NASHVILLE, TENNESSEE

LOG OF BORING B-16, SHEET 3 OF 3

PROJECT: ALCOA HIGHWAY WIDENING (SR-115) RETAINING WALLS 7 AND 8 — DRILLER: TRI-STATE DRILLING
PROJECT NO.: 7681-15-002 — ON-SITE REP.: WDS
BORING NO. / LOCATION: STATION 5+935, 10.5 m Left — DRY ON COMPLETION ?: YES

DATE: July 13, 2015 — SURFACE ELEV.: 922.0 FT. / 281.0 M
REFUSAL: DEPTH NA FT. / M — ELEV. FT. / M
SAMPLED: 0.0 FT. / 0.0 M
TOP OF ROCK: DEPTH NA FT. / M — ELEV. FT. / M
BEGAN CORING: DEPTH NA FT. / M — ELEV. FT. / M
FOOTAGE CORED (LF): 0.0 FT. / 0.0 M
BOTTOM OF HOLE: DEPTH 45.0 FT. / 13.7 M — ELEV. 877.0 FT. / 267.3 M

WATER LEVEL DATA (IF APPLICABLE)
COMPLETION: DEPTH FT. / M — ELEV. FT. / M
AFTER 24 HRS.: DEPTH FT. / M — ELEV. FT. / M
LDW AT: DEPTH FT. / M — ELEV. FT. / M

BORING ADVANCED BY: — POWER AUGERING: X — WASHBORING:

| STRATUM DEPTH FT. | STRATUM DEPTH M. | SAMPLE DEPTH FROM FT. | SAMPLE DEPTH FROM M. | SAMPLE DEPTH TO FT. | SAMPLE DEPTH TO M. | SAMPLE OR RUN NO. | SAMPLE TYPE | SPLE/CORE RECOV'D (IN.) | "SPT" VALUES 6" | 6" | 6" | N | DESCRIPTION |
|---|---|---|---|---|---|---|---|---|---|---|---|---|---|
| | | 40.0 | 12.19 | | | | | | | | | | |
| | | | | | | | A | | | | | | Sand, silty, clayey, reddish-brown (very loose to loose) |
| 42.5 | 12.95 | | | | | | | | | | | | |
| | | | | 45.0 | 13.72 | | | | | | | | |
| 45.0 | 13.72 | | | | | | | | | | | | BORING TERMINATED @ 45' DRY ON COMPLETION |
| 47.5 | 14.48 | | | | | | | | | | | | |
| 50.0 | 15.24 | | | | | | | | | | | | |
| 52.5 | 16.00 | | | | | | | | | | | | |
| 55.0 | 16.76 | | | | | | | | | | | | |
| 57.5 | 17.53 | | | | | | | | | | | | |
| 60.0 | 18.29 | | | | | | | | | | | | |

REMARKS:

amec foster wheeler — GEOTECHNICAL BRANCH, NASHVILLE, TENNESSEE

LOG OF BORING B-15, SHEET 2 OF 4

PROJECT: ALCOA HIGHWAY WIDENING (SR-115) RETAINING WALLS 7 AND 8 — DRILLER: TRI-STATE DRILLING
PROJECT NO.: 7681-15-002 — ON-SITE REP.: WDS
BORING NO. / LOCATION: STA 5+920, 8.1 m Left — DRY ON COMPLETION ?: NO

DATE: July 16, 2015 — SURFACE ELEV.: 919.0 FT. / 280.1 M
REFUSAL: DEPTH NA FT. / M — ELEV. FT. / M
SAMPLED: 80.0 FT. / 24.4 M
TOP OF ROCK: DEPTH NA FT. / M — ELEV. FT. / M
BEGAN CORING: DEPTH NA FT. / M — ELEV. FT. / M
FOOTAGE CORED (LF): 0.0 FT. / 0.0 M
BOTTOM OF HOLE: DEPTH 80.0 FT. / 24.4 M — ELEV. 839.0 FT. / 255.7 M

WATER LEVEL DATA (IF APPLICABLE)
COMPLETION: DEPTH 70.0 FT. / 21.3 M — ELEV. 849.0 FT. / 258.8 M
AFTER 24 HRS.: DEPTH FT. / M — ELEV. FT. / M
LDW AT: DEPTH FT. / M — ELEV. FT. / M

BORING ADVANCED BY: — POWER AUGERING: X — WASHBORING:

| STRATUM DEPTH FT. | STRATUM DEPTH M. | SAMPLE DEPTH FROM FT. | SAMPLE DEPTH FROM M. | SAMPLE DEPTH TO FT. | SAMPLE DEPTH TO M. | SAMPLE OR RUN NO. | SAMPLE TYPE | SPLE/CORE RECOV'D (IN.) | SPT VALUES 6" | 6" | 6" | N | DESCRIPTION |
|---|---|---|---|---|---|---|---|---|---|---|---|---|---|
| | | 20.0 | 6.10 | | | | | | | | | | |
| | | | | 23.5 | 7.16 | | A | | | | | | |
| 22.5 | 6.86 | | | | | | | | | | | | |
| | | 23.5 | 7.163 | 25.0 | 7.62 | S-7 | SS | 16 | 4 | 4 | 4 | 8 | DO6 (Moist)(Loose) (Decomposed Sandstone) |
| 25.0 | 7.62 | 25.0 | 7.62 | | | | | | | | | | |
| | | | | | | | A | | | | | | |
| 27.5 | 8.38 | | | | | | | | | | | | |
| | | 28.5 | 8.687 | 30.0 | 9.14 | S-8 | SS | 16 | 5 | 5 | 4 | 9 | DO6 (Moist)(Loose) (Decomposed Sandstone) |
| 30.0 | 9.14 | 30.0 | 9.144 | | | | | | | | | | |
| | | | | | | | A | | | | | | |
| 32.5 | 9.91 | | | | | | | | | | | | |
| | | 33.5 | 10.21 | 35.0 | 10.67 | S-9 | SS | 16 | 5 | 7 | 6 | 13 | Sand (M), slightly silty, reddish-brown (moist)(Medium Dense)(Decomposed Sandstone) |
| 35.0 | 10.67 | 35.0 | 10.67 | | | | | | | | | | |
| | | | | | | | A | | | | | | |
| 37.5 | 11.43 | | | | | | | | | | | | |
| | | 38.5 | 11.73 | 40.0 | 12.19 | S-10 | SS | 16 | 6 | 7 | 6 | 13 | Sand (M), slightly silty, reddish-brown with sandstone fragments (moist)(Medium Dense) (Decomposed Sandstone) |
| 40.0 | 12.19 | | | | | | | | | | | | |

REMARKS: Continued On Page 3.

amec foster wheeler — GEOTECHNICAL BRANCH, NASHVILLE, TENNESSEE

LOG OF BORING B-15, SHEET 4 OF 4

PROJECT: ALCOA HIGHWAY WIDENING (SR-115) RETAINING WALLS 7 AND 8 — DRILLER: TRI-STATE DRILLING
PROJECT NO.: 7681-15-002 — ON-SITE REP.: WDS
BORING NO. / LOCATION: STA 5+920, 8.1 m Left — DRY ON COMPLETION ?: NO

DATE: July 16, 2015 — SURFACE ELEV.: 919.0 FT. / 280.1 M
REFUSAL: DEPTH NA FT. / M — ELEV. FT. / M
SAMPLED: 80.0 FT. / 24.4 M
TOP OF ROCK: DEPTH NA FT. / M — ELEV. FT. / M
BEGAN CORING: DEPTH NA FT. / M — ELEV. FT. / M
FOOTAGE CORED (LF): 0.0 FT. / 0.0 M
BOTTOM OF HOLE: DEPTH 80.0 FT. / 24.4 M — ELEV. 839.0 FT. / 255.7 M

WATER LEVEL DATA (IF APPLICABLE)
COMPLETION: DEPTH 70.0 FT. / 21.3 M — ELEV. 849.0 FT. / 258.8 M
AFTER 24 HRS.: DEPTH FT. / M — ELEV. FT. / M
LDW AT: DEPTH FT. / M — ELEV. FT. / M

BORING ADVANCED BY: — POWER AUGERING: X — WASHBORING:

| STRATUM DEPTH FT. | STRATUM DEPTH M. | SAMPLE DEPTH FROM FT. | SAMPLE DEPTH FROM M. | SAMPLE DEPTH TO FT. | SAMPLE DEPTH TO M. | SAMPLE OR RUN NO. | SAMPLE TYPE | SPLE/CORE RECOV'D (IN.) | "SPT" VALUES 6" | 6" | 6" | N | DESCRIPTION |
|---|---|---|---|---|---|---|---|---|---|---|---|---|---|
| | | 60.0 | 18.29 | | | | | | | | | | Sand (M), silty, reddish-brown with sandstone fragments (moist) |
| 62.5 | 19.05 | | | | | | | | | | | | |
| 65.0 | 19.81 | | | | | | | | | | | | |
| 67.5 | 20.57 | | | | | | | | | | | | |
| 70.0 | 21.33 | | | | | | A | | | | | | |
| 72.5 | 22.10 | | | | | | | | | | | | |
| 75.0 | 22.86 | | | | | | | | | | | | |
| 77.5 | 23.62 | | | | | | | | | | | | |
| 80.0 | 24.38 | | | 80.0 | 24.38 | | | | | | | | BORING TERMINATED @ 80.0' WATER @ 70' ON COMPLETION |

REMARKS:

amec foster wheeler — GEOTECHNICAL BRANCH, NASHVILLE, TENNESSEE

LOG OF BORING B-16, SHEET 2 OF 3

PROJECT: ALCOA HIGHWAY WIDENING (SR-115) RETAINING WALLS 7 AND 8 — DRILLER: TRI-STATE DRILLING
PROJECT NO.: 7681-15-002 — ON-SITE REP.: WDS
BORING NO. / LOCATION: STATION 5+935, 10.5 m Left — DRY ON COMPLETION ?: YES

DATE: July 13, 2015 — SURFACE ELEV.: 922.0 FT. / 281.0 M
REFUSAL: DEPTH NA FT. / M — ELEV. FT. / M
SAMPLED: 0.0 FT. / 0.0 M
TOP OF ROCK: DEPTH NA FT. / M — ELEV. FT. / M
BEGAN CORING: DEPTH NA FT. / M — ELEV. FT. / M
FOOTAGE CORED (LF): 0.0 FT. / 0.0 M
BOTTOM OF HOLE: DEPTH 45.0 FT. / 13.7 M — ELEV. 877.0 FT. / 267.3 M

WATER LEVEL DATA (IF APPLICABLE)
COMPLETION: DEPTH FT. / M — ELEV. FT. / M
AFTER 24 HRS.: DEPTH FT. / M — ELEV. FT. / M
LDW AT: DEPTH FT. / M — ELEV. FT. / M

BORING ADVANCED BY: — POWER AUGERING: X — WASHBORING:

| STRATUM DEPTH FT. | STRATUM DEPTH M. | SAMPLE DEPTH FROM FT. | SAMPLE DEPTH FROM M. | SAMPLE DEPTH TO FT. | SAMPLE DEPTH TO M. | SAMPLE OR RUN NO. | SAMPLE TYPE | SPLE/CORE RECOV'D (IN.) | "SPT" VALUES 6" | 6" | 6" | N | DESCRIPTION |
|---|---|---|---|---|---|---|---|---|---|---|---|---|---|
| | | 20.0 | 6.10 | | | | | | | | | | |
| | | | | 23.0 | 7.01 | | | | | | | | Clay, sandy, silty, reddish-brown with sandstone fragments (Moist) |
| 22.5 | 6.86 | | | | | | | | | | | | |
| | | 23.0 | 7.01 | | | | | | | | | | |
| 25.0 | 7.62 | | | | | | | | | | | | |
| 27.5 | 8.38 | | | | | | | | | | | | |
| 30.0 | 9.14 | | | | | | | | | | | | |
| 32.5 | 9.91 | | | | | | A | | | | | | Sand, silty, clayey, reddish-brown (very loose to loose) each 5 foot interval look approximately 30 seconds to boring termination at 45 feet. (Moist) |
| 35.0 | 10.67 | | | | | | | | | | | | |
| 37.5 | 11.43 | | | | | | | | | | | | |
| | | | | 40.0 | 12.19 | | | | | | | | |
| 40.0 | 12.19 | | | | | | | | | | | | |

REMARKS: Continued On Page 3.

amec foster wheeler — GEOTECHNICAL BRANCH, NASHVILLE, TENNESSEE

LOG OF BORING B-17, SHEET 1 OF 2

PROJECT: ALCOA HIGHWAY WIDENING (SR-115) RETAINING WALLS 7 AND 8 — DRILLER: TRI-STATE DRILLING
PROJECT NO.: 7681-15-002 — ON-SITE REP.: WDS
BORING NO. / LOCATION: STA 5+960, 11.0 m Left — DRY ON COMPLETION ?: YES

DATE: July 27, 2015 — SURFACE ELEV.: 924.5 FT. / 281.8 M
REFUSAL: DEPTH 36.6 FT. / 11.2 M — ELEV. 887.9 FT. / 270.6 M
SAMPLED: 36.6 FT. / 11.2 M
TOP OF ROCK: DEPTH NA FT. / M — ELEV. FT. / M
BEGAN CORING: DEPTH NA FT. / M — ELEV. FT. / M
FOOTAGE CORED (LF): 0.0 FT. / 0.0 M
BOTTOM OF HOLE: DEPTH 36.6 FT. / 11.2 M — ELEV. 887.9 FT. / 270.6 M

WATER LEVEL DATA (IF APPLICABLE)
COMPLETION: DEPTH FT. / M — ELEV. FT. / M
AFTER 24 HRS.: DEPTH FT. / M — ELEV. FT. / M
LDW AT: DEPTH FT. / M — ELEV. FT. / M

BORING ADVANCED BY: — POWER AUGERING: X — WASHBORING:

| STRATUM DEPTH FT. | STRATUM DEPTH M. | SAMPLE DEPTH FROM FT. | SAMPLE DEPTH FROM M. | SAMPLE DEPTH TO FT. | SAMPLE DEPTH TO M. | SAMPLE OR RUN NO. | SAMPLE TYPE | SPLE/CORE RECOV'D (IN.) | SPT VALUES 6" | 6" | 6" | N | STRATUM DESCRIPTION |
|---|---|---|---|---|---|---|---|---|---|---|---|---|---|
| | | 0.0 | 0.00 | | | | A | | | | | | Clay, sandy, silty, reddish-brown |
| | | 1.0 | 0.30 | 2.5 | 0.76 | S-1 | SS | 8 | 1 | 2 | 2 | 4 | Clay, sandy, silty, reddish-brown (moist)(Soft) |
| 2.5 | 0.76 | 2.5 | 0.76 | 3.5 | 1.07 | | A | | | | | | |
| | | 3.5 | 1.07 | 5.0 | 1.52 | S-2 | SS | 8 | 3 | 5 | 7 | 12 | DO1, stiff |
| 5.0 | 1.52 | 5.0 | 1.52 | 6.0 | 1.83 | | A | | | | | | |
| | | 6.0 | 1.83 | 7.5 | 2.29 | S-3 | SS | 14 | 4 | 6 | 8 | 14 | DO2 |
| 7.5 | 2.29 | 7.5 | 2.29 | 8.5 | 2.59 | | A | | | | | | |
| | | 8.5 | 2.59 | 10.0 | 3.05 | S-4 | SS | 14 | 4 | 7 | 8 | 15 | DO2 |
| 10.0 | 3.05 | 10.0 | 3.05 | | | | | | | | | | |
| | | | | | | | A | | | | | | |
| 12.5 | 3.81 | | | | | | | | | | | | |
| | | 13.5 | 4.11 | 15.0 | 4.57 | S-5 | SS | 16 | 4 | 5 | 6 | 11 | Sand (F-M), silty, brown (moist)(Medium Dense) |
| 15.0 | 4.57 | 15.0 | 4.57 | | | | | | | | | | |
| | | | | | | | A | | | | | | |
| 17.5 | 5.33 | | | | | | | | | | | | |
| | | 18.5 | 5.64 | 20.0 | 6.10 | S-6 | SS | 16 | 3 | 4 | 4 | 8 | DO5, Loose |
| 20.0 | 6.10 | | | | | | | | | | | | |

REMARKS: Continued On Page 2.

# PRELIMINARY PLANS

SEALED BY

TENNESSEE METRIC D.O.T.

COORDINATES ARE NAD/83(1995), ARE DATUM ADJUSTED BY THE FACTOR OF 1.000 AND TIED TO THE TGRN. ALL ELEVATIONS ARE REFERENCED TO THE NAVD 1988.

STATE OF TENNESSEE
DEPARTMENT OF TRANSPORTATION

## SOIL BORING LOGS RETAINING WALLS NO. 7 AND 8

SCALE: AS NOTED

CONTRACTOR NOTES:

1. THE GEOTECHNICAL REPORT WHICH INCLUDES DETAILED BORING RECORDS, SOIL AND ROCK TESTING DATA IS AVAILABLE UPON REQUEST. ROCK CORE SAMPLES ARE AVAILABLE FOR INSPECTION BY THE CONTRACTOR.

2. IT IS THE RESPONSIBILITY OF THE CONTRACTOR TO REVIEW THE PLANS, GEOTECHNICAL REPORT, AND BORING LOGS TO BECOME FAMILIAR WITH THE SUBSURFACE CONDITIONS PERTINENT TO THE ASSOCIATED WORK TO BE CONDUCTED BY THE CONTRACTOR. THE CONTRACTOR SHOULD ALSO CONSIDER THEIR EXPERIENCE IN THE PROJECT'S GEOLOGIC AND SUBSURFACE SETTING AND THEIR EXPERIENCE IN DEALING WITH VARIABLE SUBSURFACE CONDITIONS ACROSS A PROJECT SITE TO BASE THEIR BID UPON AND DECISIONS REGARDING APPROPRIATE EQUIPMENT TO BE UTILIZED.

| TYPE | YEAR | PROJECT NO. | SHEET NO. |
|---|---|---|---|
| CONST. | 2015 | 47026-3279-14 | ---- |

amec foster wheeler — GEOTECHNICAL BRANCH, NASHVILLE, TENNESSEE

LOG OF BORING B-17, SHEET 2 OF 2

PROJECT: ALCOA HIGHWAY WIDENING (SR-115) RETAINING WALLS 7 AND 8 — DRILLER: TRI-STATE DRILLING
PROJECT NO.: 7681-15-002 — ON-SITE REP.: WDS
BORING NO. / LOCATION: STA 5+950, 11.0 m Left — DRY ON COMPLETION ?: YES
DATE: July 27, 2015 — SURFACE ELEV.: 924.5 FT. 281.8 M
REFUSAL: DEPTH 36.6 FT. 11.2 M — ELEV.: 887.9 FT. 270.6 M
SAMPLED: 36.6 FT. 11.2 M
TOP OF ROCK: DEPTH NA FT. M — ELEV. FT. M
BEGAN CORING: DEPTH NA FT. M — ELEV. FT. M
FOOTAGE CORED (LF): 0.0 FT. 0.0 M
BOTTOM OF HOLE: DEPTH 36.6 FT. 11.2 M — ELEV.: 887.9 FT. 270.6 M
BORING ADVANCED BY: — POWER AUGERING: X — WASHBORING:

WATER LEVEL DATA (IF APPLICABLE)
COMPLETION: DEPTH FT. M; ELEV. FT. M
AFTER 24 HRS.: DEPTH FT. M; ELEV. FT. M
LDW AT: DEPTH FT. M; ELEV. FT. M

| STRATUM DEPTH FT. | STRATUM DEPTH M. | SAMPLE DEPTH FROM FT. | SAMPLE DEPTH FROM M. | SAMPLE DEPTH TO FT. | SAMPLE DEPTH TO M. | SAMPLE OR RUN NO. | SAMPLE TYPE | SPLE/CORE RECOV'D (IN.) | SPT VALUES 6" | 6" | 6" | N | DESCRIPTION |
|---|---|---|---|---|---|---|---|---|---|---|---|---|---|
| | | 20.0 | 6.10 | | | | | | | | | | |
| 22.5 | 6.86 | | | | | | A | | | | | | |
| | | 23.5 | 7.163 | 23.5 | 7.16 | | | | | | | | |
| 25.0 | 7.62 | 25.0 | 7.62 | 25.0 | 7.62 | S-7 | SS | 16 | 4 | 4 | 5 | 9 | Sand (F-M), slightly silty, brown (moist)(Loose) |
| 27.5 | 8.38 | | | | | | A | | | | | | |
| | | 28.5 | 8.687 | 28.5 | 8.69 | | | | | | | | |
| 30.0 | 9.14 | 30.0 | 9.144 | 30.0 | 9.14 | S-8 | SS | 16 | 5 | 6 | 8 | 14 | Sand (F-M), slightly silty, brown to light yellowish-brown (moist)(Medium Dense) (Decomposed Sandstone) |
| 32.5 | 9.91 | | | | | | | | | | | | Weathered Rock @ 33.5' |
| | | 33.5 | 10.21 | 33.5 | 10.21 | | | | | | | | |
| 35.0 | 10.67 | 35.0 | 10.67 | 35.0 | 10.67 | S-9 | SS | 14 | 6 | 10 | 9 | 19 | Sand (F-M), brown with sandstone fragments (moist)(Medium Dense)(Decomposed Sandstone) |
| | | | | 36.6 | 11.16 | | A | | | | | | |
| 37.5 | 11.43 | | | | | | | | | | | | AUGER REFUSAL @ 36.6' DRY ON COMPLETION AUGER LEAD OFF |
| 40.0 | 12.19 | | | | | | | | | | | | |

REMARKS:

amec foster wheeler — GEOTECHNICAL BRANCH, NASHVILLE, TENNESSEE

LOG OF BORING B-18, SHEET 2 OF 3

PROJECT: ALCOA HIGHWAY WIDENING (SR-115) RETAINING WALLS 7 AND 8 — DRILLER: TRI-STATE DRILLING
PROJECT NO.: 7681-15-002 — ON-SITE REP.: WDS
BORING NO. / LOCATION: STA 5+965, 11.0 m Left — DRY ON COMPLETION ?: YES
DATE: July 27, 2015 — SURFACE ELEV.: 933.4 FT. 284.5 M
REFUSAL: DEPTH NA FT. M — ELEV. FT. M
SAMPLED: 0.0 FT. 0.0 M
TOP OF ROCK: DEPTH NA FT. M — ELEV. FT. M
BEGAN CORING: DEPTH NA FT. M — ELEV. FT. M
FOOTAGE CORED (LF): 0.0 FT. 0.0 M
BOTTOM OF HOLE: DEPTH 60.0 FT. 18.3 M — ELEV.: 873.4 FT. 266.2 M
BORING ADVANCED BY: — POWER AUGERING: X — WASHBORING:

WATER LEVEL DATA (IF APPLICABLE)
COMPLETION: DEPTH FT. M; ELEV. FT. M
AFTER 24 HRS.: DEPTH FT. M; ELEV. FT. M
LDW AT: DEPTH FT. M; ELEV. FT. M

| STRATUM DEPTH FT. | STRATUM DEPTH M. | SAMPLE DEPTH FROM FT. | SAMPLE DEPTH FROM M. | SAMPLE DEPTH TO FT. | SAMPLE DEPTH TO M. | SAMPLE OR RUN NO. | SAMPLE TYPE | SPLE/CORE RECOV'D (IN.) | SPT VALUES 6" | 6" | 6" | N | DESCRIPTION |
|---|---|---|---|---|---|---|---|---|---|---|---|---|---|
| | | 20.0 | 6.10 | | | | | | | | | | |
| 22.5 | 6.86 | | | | | | | | | | | | Sand, silty, clayey, reddish-brown (Moist) |
| 25.0 | 7.62 | | | | | | | | | | | | |
| 27.5 | 8.38 | | | | | | | | | | | | |
| 30.0 | 9.14 | | | | | | A | | | | | | |
| 32.5 | 9.91 | | | | | | | | | | | | |
| 35.0 | 10.67 | | | | | | | | | | | | |
| 37.5 | 11.43 | 38.0 | 11.58 | 38.0 | 11.58 | | A | | | | | | Sand, silty, brown |
| | | | | 40.0 | 12.19 | | | | | | | | |
| 40.0 | 12.19 | | | | | | | | | | | | |

REMARKS: Continued On Page 3.

amec foster wheeler — GEOTECHNICAL BRANCH, NASHVILLE, TENNESSEE

LOG OF BORING B-19, SHEET 1 OF 3

PROJECT: ALCOA HIGHWAY WIDENING (SR-115) RETAINING WALLS 7 AND 8 — DRILLER: TRI-STATE DRILLING
PROJECT NO.: 7681-15-002 — ON-SITE REP.: WDS
BORING NO. / LOCATION: STA 5+980, 11.0 m Left — DRY ON COMPLETION ?: YES
DATE: July 28, 2015 — SURFACE ELEV.: 945.0 FT. 288.0 M
REFUSAL: DEPTH NA FT. M — ELEV. FT. M
SAMPLED: 55.0 FT. 16.8 M
TOP OF ROCK: DEPTH NA FT. M — ELEV. FT. M
BEGAN CORING: DEPTH NA FT. M — ELEV. FT. M
FOOTAGE CORED (LF): 0.0 FT. 0.0 M
BOTTOM OF HOLE: DEPTH 55.0 FT. 16.8 M — ELEV.: 890.0 FT. 271.3 M
BORING ADVANCED BY: — POWER AUGERING: X — WASHBORING:

WATER LEVEL DATA (IF APPLICABLE)
COMPLETION: DEPTH FT. M; ELEV. FT. M
AFTER 24 HRS.: DEPTH FT. M; ELEV. FT. M
LDW AT: DEPTH FT. M; ELEV. FT. M

| STRATUM DEPTH FT. | STRATUM DEPTH M. | SAMPLE DEPTH FROM FT. | SAMPLE DEPTH FROM M. | SAMPLE DEPTH TO FT. | SAMPLE DEPTH TO M. | SAMPLE OR RUN NO. | SAMPLE TYPE | SPLE/CORE RECOV'D (IN.) | SPT VALUES 6" | 6" | 6" | N | STRATUM DESCRIPTION |
|---|---|---|---|---|---|---|---|---|---|---|---|---|---|
| | | 0.0 | 0.00 | | | | A | | | | | | |
| | | 1.0 | 0.30 | 1.0 | 0.30 | | | | | | | | |
| 2.5 | 0.76 | | | | | S-1 | SS | 14 | 3 | 3 | 4 | 7 | Clay, sandy, silty, reddish-brown (Moist)(Medium Stiff) |
| | | 2.5 | 0.76 | 2.5 | 0.76 | | | | | | | | |
| | | 3.5 | 1.07 | 3.5 | 1.07 | | A | | | | | | |
| 5.0 | 1.52 | | | | | | | | | | | | |
| | | 5.0 | 1.52 | 5.0 | 1.52 | S-2 | SS | 16 | 4 | 7 | 7 | 14 | Clay, very sandy, silty, reddish-brown (Moist)(Stiff) |
| | | 6.0 | 1.83 | 5.0 | 1.52 | | A | | | | | | |
| 7.5 | 2.29 | | | | | | | | | | | | |
| | | 7.5 | 2.29 | 7.5 | 2.29 | S-3 | SS | 12 | 4 | 4 | 5 | 9 | Sand (F-M), silty, slightly clayey, reddish-brown (Moist)(Loose) |
| | | 8.5 | 2.59 | 8.5 | 2.59 | | A | | | | | | |
| 10.0 | 3.05 | | | | | | | | | | | | |
| | | 10.0 | 3.05 | 10.0 | 3.05 | S-4 | SS | 16 | 3 | 5 | 5 | 10 | Sand (F-M), silty, dark brown (moist)(Loose) |
| 12.5 | 3.81 | | | | | | | | | | | | |
| | | 13.5 | 4.11 | 13.5 | 4.11 | | A | | | | | | |
| 15.0 | 4.57 | | | | | | | | | | | | |
| | | 15.0 | 4.57 | 15.0 | 4.57 | S-5 | SS | 16 | 2 | 3 | 3 | 8 | Sand (M-F), silty, dark brown with sandstone fragments (moist)(Loose)(Decomposed Sandstone) |
| 17.5 | 5.33 | | | | | | | | | | | | |
| | | 18.5 | 5.64 | 18.5 | 5.64 | | A | | | | | | |
| 20.0 | 6.10 | | | 20.0 | 6.10 | S-6 | SS | 16 | 3 | 4 | 4 | 8 | DO5 |

REMARKS: Continued On Page 2.

amec foster wheeler — GEOTECHNICAL BRANCH, NASHVILLE, TENNESSEE

LOG OF BORING B-19, SHEET 3 OF 3

PROJECT: ALCOA HIGHWAY WIDENING (SR-115) RETAINING WALLS 7 AND 8 — DRILLER: TRI-STATE DRILLING
PROJECT NO.: 7681-15-002 — ON-SITE REP.: WDS
BORING NO. / LOCATION: STA 5+980, 11.0 m Left — DRY ON COMPLETION ?: YES
DATE: July 28, 2015 — SURFACE ELEV.: 945.0 FT. 288.0 M
REFUSAL: DEPTH NA FT. M — ELEV. FT. M
SAMPLED: 55.0 FT. 16.8 M
TOP OF ROCK: DEPTH NA FT. M — ELEV. FT. M
BEGAN CORING: DEPTH NA FT. M — ELEV. FT. M
FOOTAGE CORED (LF): 0.0 FT. 0.0 M
BOTTOM OF HOLE: DEPTH 55.0 FT. 16.8 M — ELEV.: 890.0 FT. 271.3 M
BORING ADVANCED BY: — POWER AUGERING: X — WASHBORING:

WATER LEVEL DATA (IF APPLICABLE)
COMPLETION: DEPTH FT. M; ELEV. FT. M
AFTER 24 HRS.: DEPTH FT. M; ELEV. FT. M
LDW AT: DEPTH FT. M; ELEV. FT. M

| STRATUM DEPTH FT. | STRATUM DEPTH M. | SAMPLE DEPTH FROM FT. | SAMPLE DEPTH FROM M. | SAMPLE DEPTH TO FT. | SAMPLE DEPTH TO M. | SAMPLE OR RUN NO. | SAMPLE TYPE | SPLE/CORE RECOV'D (IN.) | SPT VALUES 6" | 6" | 6" | N | DESCRIPTION |
|---|---|---|---|---|---|---|---|---|---|---|---|---|---|
| 40.0 | 12.19 | | | | | | A | | | | | | |
| 42.5 | 12.95 | | | | | | | | | | | | |
| | | 43.5 | 13.26 | 43.5 | 13.26 | | | | | | | | |
| 45.0 | 13.72 | 45.0 | 13.72 | 45.0 | 13.72 | S-11 | SS | 16 | 2 | 3 | 3 | 6 | DO5 |
| 47.5 | 14.48 | | | | | | A | | | | | | |
| | | 48.5 | 14.78 | 48.5 | 14.78 | | | | | | | | |
| 50.0 | 15.24 | 50.0 | 15.24 | 50.0 | 15.24 | S-12 | SS | 16 | 6 | 10 | 10 | 20 | DO5, med dense |
| 52.5 | 16.00 | | | | | | A | | | | | | |
| | | 53.5 | 16.31 | 53.5 | 16.31 | | | | | | | | |
| 55.0 | 16.76 | | | 55.0 | 16.76 | S-13 | SS | 18 | 6 | 9 | 8 | 17 | DO12 |
| 57.5 | 17.53 | | | | | | | | | | | | NO REFUSAL @ 55.0' DRY ON COMPLETION |
| 60.0 | 18.29 | | | | | | | | | | | | |

REMARKS:

amec foster wheeler — GEOTECHNICAL BRANCH, NASHVILLE, TENNESSEE

LOG OF BORING B-18, SHEET 1 OF 3

PROJECT: ALCOA HIGHWAY WIDENING (SR-115) RETAINING WALLS 7 AND 8 — DRILLER: TRI-STATE DRILLING
PROJECT NO.: 7681-15-002 — ON-SITE REP.: WDS
BORING NO. / LOCATION: STA 5+965, 11.0 m Left — DRY ON COMPLETION ?: YES
DATE: July 27, 2015 — SURFACE ELEV.: 933.4 FT. 284.5 M
REFUSAL: DEPTH NA FT. M — ELEV. FT. M
SAMPLED: 0.0 FT. 0.0 M
TOP OF ROCK: DEPTH NA FT. M — ELEV. FT. M
BEGAN CORING: DEPTH NA FT. M — ELEV. FT. M
FOOTAGE CORED (LF): 0.0 FT. 0.0 M
BOTTOM OF HOLE: DEPTH 60.0 FT. 18.3 M — ELEV.: 873.4 FT. 266.2 M
BORING ADVANCED BY: — POWER AUGERING: X — WASHBORING:

WATER LEVEL DATA (IF APPLICABLE)
COMPLETION: DEPTH FT. M; ELEV. FT. M
AFTER 24 HRS.: DEPTH FT. M; ELEV. FT. M
LDW AT: DEPTH FT. M; ELEV. FT. M

| STRATUM DEPTH FT. | STRATUM DEPTH M. | SAMPLE DEPTH FROM FT. | SAMPLE DEPTH FROM M. | SAMPLE DEPTH TO FT. | SAMPLE DEPTH TO M. | SAMPLE OR RUN NO. | SAMPLE TYPE | SPLE/CORE RECOV'D (IN.) | SPT VALUES 6" | 6" | 6" | N | STRATUM DESCRIPTION |
|---|---|---|---|---|---|---|---|---|---|---|---|---|---|
| | | 0.0 | 0.00 | | | | | | | | | | Side Hill Cut |
| 2.5 | 0.76 | | | | | | | | | | | | |
| 5.0 | 1.52 | | | | | | A | | | | | | |
| 7.5 | 2.29 | | | | | | | | | | | | Clay, sandy, silty, reddish-brown (Moist) |
| 10.0 | 3.05 | | | | | | | | | | | | |
| 12.5 | 3.81 | | | 13.0 | 3.96 | | | | | | | | |
| | | 13.0 | 3.96 | 13.0 | 3.96 | | | | | | | | |
| 15.0 | 4.57 | | | | | | A | | | | | | |
| 17.5 | 5.33 | | | | | | | | | | | | Sand, silty, clayey, reddish-brown (Moist) |
| 20.0 | 6.10 | | | 20.0 | 6.10 | | | | | | | | |

REMARKS: Continued On Page 2.

amec foster wheeler — GEOTECHNICAL BRANCH, NASHVILLE, TENNESSEE

LOG OF BORING B-18, SHEET 3 OF 3

PROJECT: ALCOA HIGHWAY WIDENING (SR-115) RETAINING WALLS 7 AND 8 — DRILLER: TRI-STATE DRILLING
PROJECT NO.: 7681-15-002 — ON-SITE REP.: WDS
BORING NO. / LOCATION: STA 5+965, 11.0 m Left — DRY ON COMPLETION ?: YES
DATE: July 27, 2015 — SURFACE ELEV.: 933.4 FT. 284.5 M
REFUSAL: DEPTH NA FT. M — ELEV. FT. M
SAMPLED: 0.0 FT. 0.0 M
TOP OF ROCK: DEPTH NA FT. M — ELEV. FT. M
BEGAN CORING: DEPTH NA FT. M — ELEV. FT. M
FOOTAGE CORED (LF): 0.0 FT. 0.0 M
BOTTOM OF HOLE: DEPTH 60.0 FT. 18.3 M — ELEV.: 873.4 FT. 266.2 M
BORING ADVANCED BY: — POWER AUGERING: X — WASHBORING:

WATER LEVEL DATA (IF APPLICABLE)
COMPLETION: DEPTH FT. M; ELEV. FT. M
AFTER 24 HRS.: DEPTH FT. M; ELEV. FT. M
LDW AT: DEPTH FT. M; ELEV. FT. M

| STRATUM DEPTH FT. | STRATUM DEPTH M. | SAMPLE DEPTH FROM FT. | SAMPLE DEPTH FROM M. | SAMPLE DEPTH TO FT. | SAMPLE DEPTH TO M. | SAMPLE OR RUN NO. | SAMPLE TYPE | SPLE/CORE RECOV'D (IN.) | SPT VALUES 6" | 6" | 6" | N | DESCRIPTION |
|---|---|---|---|---|---|---|---|---|---|---|---|---|---|
| | | 40.0 | 12.19 | | | | | | | | | | Sand, silty, brown |
| 42.5 | 12.95 | | | | | | | | | | | | |
| 45.0 | 13.72 | | | | | | | | | | | | |
| 47.5 | 14.48 | | | | | | A | | | | | | |
| 50.0 | 15.24 | | | | | | | | | | | | |
| 52.5 | 16.00 | | | | | | | | | | | | |
| 55.0 | 16.76 | | | | | | | | | | | | |
| 57.5 | 17.53 | | | | | | | | | | | | |
| | | | | 60.0 | 18.29 | | | | | | | | NO REFUSAL @ 60.0' DRY ON COMPLETION |
| 60.0 | 18.29 | | | | | | | | | | | | |

REMARKS:

amec foster wheeler — GEOTECHNICAL BRANCH, NASHVILLE, TENNESSEE

LOG OF BORING B-19, SHEET 2 OF 3

PROJECT: ALCOA HIGHWAY WIDENING (SR-115) RETAINING WALLS 7 AND 8 — DRILLER: TRI-STATE DRILLING
PROJECT NO.: 7681-15-002 — ON-SITE REP.: WDS
BORING NO. / LOCATION: STA 5+980, 11.0 m Left — DRY ON COMPLETION ?: YES
DATE: July 28, 2015 — SURFACE ELEV.: 945.0 FT. 288.0 M
REFUSAL: DEPTH NA FT. M — ELEV. FT. M
SAMPLED: 55.0 FT. 16.8 M
TOP OF ROCK: DEPTH NA FT. M — ELEV. FT. M
BEGAN CORING: DEPTH NA FT. M — ELEV. FT. M
FOOTAGE CORED (LF): 0.0 FT. 0.0 M
BOTTOM OF HOLE: DEPTH 55.0 FT. 16.8 M — ELEV.: 890.0 FT. 271.3 M
BORING ADVANCED BY: — POWER AUGERING: X — WASHBORING:

WATER LEVEL DATA (IF APPLICABLE)
COMPLETION: DEPTH FT. M; ELEV. FT. M
AFTER 24 HRS.: DEPTH FT. M; ELEV. FT. M
LDW AT: DEPTH FT. M; ELEV. FT. M

| STRATUM DEPTH FT. | STRATUM DEPTH M. | SAMPLE DEPTH FROM FT. | SAMPLE DEPTH FROM M. | SAMPLE DEPTH TO FT. | SAMPLE DEPTH TO M. | SAMPLE OR RUN NO. | SAMPLE TYPE | SPLE/CORE RECOV'D (IN.) | SPT VALUES 6" | 6" | 6" | N | DESCRIPTION |
|---|---|---|---|---|---|---|---|---|---|---|---|---|---|
| | | 20.0 | 6.10 | | | | A | | | | | | |
| 22.5 | 6.86 | | | | | | | | | | | | |
| | | 23.5 | 7.163 | 23.5 | 7.16 | | | | | | | | |
| 25.0 | 7.62 | 25.0 | 7.62 | 25.0 | 7.62 | S-7 | SS | 16 | 3 | 4 | 3 | 7 | DO5 |
| 27.5 | 8.38 | | | | | | A | | | | | | |
| | | 28.5 | 8.687 | 28.5 | 8.69 | | | | | | | | |
| 30.0 | 9.14 | 30.0 | 9.144 | 30.0 | 9.14 | S-8 | SS | 16 | 4 | 6 | 6 | 12 | DO5, med dense |
| 32.5 | 9.91 | | | | | | A | | | | | | |
| | | 33.5 | 10.21 | 33.5 | 10.21 | | | | | | | | |
| 35.0 | 10.67 | 35.0 | 10.67 | 35.0 | 10.67 | S-9 | SS | 16 | 4 | 4 | 4 | 8 | DO5 |
| 37.5 | 11.43 | | | | | | A | | | | | | |
| | | 38.5 | 11.73 | 38.5 | 11.73 | | | | | | | | |
| 40.0 | 12.19 | | | 40.0 | 12.19 | S-10 | SS | 16 | 2 | 2 | 2 | 4 | DO5 numerous sandstone fragments (Very Loose) |

REMARKS: Continued On Page 3.

amec foster wheeler — GEOTECHNICAL BRANCH, NASHVILLE, TENNESSEE

LOG OF BORING B-20, SHEET 1 OF 5

PROJECT: ALCOA HIGHWAY WIDENING (SR-115) RETAINING WALLS 7 AND 8 — DRILLER: TRI-STATE DRILLING
PROJECT NO.: 7681-15-002 — ON-SITE REP.: WDS
BORING NO. / LOCATION: STA 5+995, 10.0 m Left — DRY ON COMPLETION ?: YES
DATE: July 27, 2015 — SURFACE ELEV.: 954.1 FT. 290.8 M
REFUSAL: DEPTH NA FT. M — ELEV. FT. M
SAMPLED: 0.0 FT. 0.0 M
TOP OF ROCK: DEPTH NA FT. M — ELEV. FT. M
BEGAN CORING: DEPTH NA FT. M — ELEV. FT. M
FOOTAGE CORED (LF): 0.0 FT. 0.0 M
BOTTOM OF HOLE: DEPTH 85.0 FT. 25.9 M — ELEV.: 869.1 FT. 264.9 M
BORING ADVANCED BY: — POWER AUGERING: X — WASHBORING:

WATER LEVEL DATA (IF APPLICABLE)
COMPLETION: DEPTH FT. M; ELEV. FT. M
AFTER 24 HRS.: DEPTH FT. M; ELEV. FT. M
LDW AT: DEPTH FT. M; ELEV. FT. M

| STRATUM DEPTH FT. | STRATUM DEPTH M. | SAMPLE DEPTH FROM FT. | SAMPLE DEPTH FROM M. | SAMPLE DEPTH TO FT. | SAMPLE DEPTH TO M. | SAMPLE OR RUN NO. | SAMPLE TYPE | SPLE/CORE RECOV'D (IN.) | SPT VALUES 6" | 6" | 6" | N | STRATUM DESCRIPTION |
|---|---|---|---|---|---|---|---|---|---|---|---|---|---|
| | | 0.0 | 0.00 | | | | | | | | | | |
| 2.5 | 0.76 | | | | | | A | | | | | | Clay, sandy, silty, reddish-brown (Moist) |
| 5.0 | 1.52 | | | | | | | | | | | | |
| 7.5 | 2.29 | | | 8.0 | 2.44 | | | | | | | | |
| | | 8.0 | 2.44 | | | | | | | | | | |
| 10.0 | 3.05 | | | | | | | | | | | | |
| 12.5 | 3.81 | | | | | | A | | | | | | Sand, silty, clayey, brown (Moist) |
| 15.0 | 4.57 | | | | | | | | | | | | |
| 17.5 | 5.33 | | | 18.0 | 5.49 | | | | | | | | |
| | | 18.0 | 5.49 | | | | | | | | | | |
| 20.0 | 6.10 | | | 20.0 | 6.10 | | A | | | | | | Sand, silty, brown (Moist) |

REMARKS: Continued On Page 2.

CONTRACTOR NOTES:

1. THE GEOTECHNICAL REPORT WHICH INCLUDES DETAILED BORING RECORDS, SOIL AND ROCK TESTING DATA IS AVAILABLE UPON REQUEST. ROCK CORE SAMPLES ARE AVAILABLE FOR INSPECTION BY THE CONTRACTOR.

2. IT IS THE RESPONSIBILITY OF THE CONTRACTOR TO REVIEW THE PLANS, GEOTECHNICAL REPORT, AND BORING LOGS TO BECOME FAMILIAR WITH THE SUBSURFACE CONDITIONS PERTINENT TO THE ASSOCIATED WORK TO BE CONDUCTED BY THE CONTRACTOR. THE CONTRACTOR SHOULD ALSO CONSIDER THEIR EXPERIENCE IN THE PROJECT'S GEOLOGIC AND SUBSURFACE SETTING AND THEIR EXPERIENCE IN DEALING WITH VARIABLE SUBSURFACE CONDITIONS ACROSS A PROJECT SITE TO BASE THEIR BID UPON AND DECISIONS REGARDING APPROPRIATE EQUIPMENT TO BE UTILIZED.

# PRELIMINARY PLANS

SEALED BY

TENNESSEE METRIC D.O.T.

COORDINATES ARE NAD/83(1995), ARE DATUM ADJUSTED BY THE FACTOR OF 1.000 AND TIED TO THE TGRN. ALL ELEVATIONS ARE REFERENCED TO THE NAVD 1988.

STATE OF TENNESSEE
DEPARTMENT OF TRANSPORTATION

SOIL BORING LOGS
RETAINING WALLS
NO. 7 AND 8

SCALE: AS NOTED

9/9/2015
R:_Infrastructure Project Files\2015 Infra Projects\7681-15-002 ALCOA Hwy (SR 115) WALLS 7 AND 8\06 - CADD\03-23-RETAINING WALL NO. 7 AND 8 SOIL BORING LOGS.SHT

| TYPE | YEAR | PROJECT NO. | SHEET NO. |
|---|---|---|---|
| CONST. | 2015 | 47026-3279-14 | ---- |

amec foster wheeler — GEOTECHNICAL BRANCH, NASHVILLE, TENNESSEE — LOG OF BORING B-20, SHEET 2 OF 5

PROJECT: ALCOA HIGHWAY WIDENING (SR-115) RETAINING WALLS 7 AND 8 — DRILLER: TRI-STATE DRILLING
PROJECT NO.: 7681-15-002 — ON-SITE REP.: WDS
BORING NO. / LOCATION: STA 5+995, 10.0 m Left — DRY ON COMPLETION ?: YES
DATE: July 27, 2015 — SURFACE ELEV.: 954.1 FT. 290.8 M
REFUSAL: DEPTH NA FT. M ELEV. FT. M
SAMPLED 0.0 FT. 0.0 M
TOP OF ROCK: DEPTH NA FT. M ELEV. FT. M
BEGAN CORING: DEPTH NA FT. M ELEV. FT. M
FOOTAGE CORED (LF): 0.0 FT. 0.0 M
BOTTOM OF HOLE: DEPTH 85.0 FT. 25.9 M ELEV. 869.1 FT. 264.9 M
BORING ADVANCED BY: POWER AUGERING X WASHBORING

WATER LEVEL DATA (IF APPLICABLE): COMPLETION: DEPTH FT. M, ELEV. FT. M; AFTER 24 HRS.: DEPTH FT. M, ELEV. FT. M; LDW AT: DEPTH FT. M, ELEV. FT. M

| STRATUM DEPTH FT. | STRATUM DEPTH M. | SAMPLE DEPTH FROM FT. | SAMPLE DEPTH FROM M. | SAMPLE DEPTH TO FT. | SAMPLE DEPTH TO M. | SAMPLE OR RUN NO. | SAMPLE TYPE | SPLE/CORE RECOV'D (IN.) | SPT VALUES 6" | 6" | 6" | N | DESCRIPTION |
|---|---|---|---|---|---|---|---|---|---|---|---|---|---|
| | | 20.0 | 6.10 | | | | | | | | | | |
| 22.5 | 6.86 | | | | | | A | | | | | | Sand, silty, brown (Moist) |
| | | 23.0 | 7.01 | 23.0 | 7.01 | | | | | | | | |
| 25.0 | 7.62 | | | | | | | | | | | | |
| 27.5 | 8.38 | | | | | | | | | | | | |
| 30.0 | 9.14 | | | | | | A | | | | | | Sand, slightly silty, brown (Moist)(Loose) |
| 32.5 | 9.91 | | | | | | | | | | | | |
| 35.0 | 10.67 | | | | | | | | | | | | |
| 37.5 | 11.43 | | | | | | | | | | | | |
| 40.0 | 12.19 | | | 40.0 | 12.19 | | | | | | | | |

REMARKS: Continued On Page 3.

amec foster wheeler — GEOTECHNICAL BRANCH, NASHVILLE, TENNESSEE — LOG OF BORING B-20, SHEET 4 OF 5

PROJECT: ALCOA HIGHWAY WIDENING (SR-115) RETAINING WALLS 7 AND 8 — DRILLER: TRI-STATE DRILLING
PROJECT NO.: 7681-15-002 — ON-SITE REP.: WDS
BORING NO. / LOCATION: STA 5+995, 10.0 m Left — DRY ON COMPLETION ?: YES
DATE: July 27, 2015 — SURFACE ELEV.: 954.1 FT. 290.8 M
REFUSAL: DEPTH NA FT. M ELEV. FT. M
SAMPLED 0.0 FT. 0.0 M
TOP OF ROCK: DEPTH NA FT. M ELEV. FT. M
BEGAN CORING: DEPTH NA FT. M ELEV. FT. M
FOOTAGE CORED (LF): 0.0 FT. 0.0 M
BOTTOM OF HOLE: DEPTH 85.0 FT. 25.9 M ELEV. 869.1 FT. 264.9 M
BORING ADVANCED BY: POWER AUGERING X WASHBORING

WATER LEVEL DATA (IF APPLICABLE): COMPLETION: DEPTH FT. M, ELEV. FT. M; AFTER 24 HRS.: DEPTH FT. M, ELEV. FT. M; LDW AT: DEPTH FT. M, ELEV. FT. M

| STRATUM DEPTH FT. | STRATUM DEPTH M. | SAMPLE DEPTH FROM FT. | SAMPLE DEPTH FROM M. | SAMPLE DEPTH TO FT. | SAMPLE DEPTH TO M. | SAMPLE OR RUN NO. | SAMPLE TYPE | SPLE/CORE RECOV'D (IN.) | SPT VALUES 6" | 6" | 6" | N | DESCRIPTION |
|---|---|---|---|---|---|---|---|---|---|---|---|---|---|
| | | 60.0 | 18.29 | | | | | | | | | | |
| 62.5 | 19.05 | | | | | | | | | | | | Sand, slightly silty, brown (Moist)(Loose) |
| 65.0 | 19.81 | | | | | | | | | | | | |
| 67.5 | 20.57 | | | | | | | | | | | | |
| 70.0 | 21.33 | | | | | | | A | | | | | |
| 72.5 | 22.10 | | | | | | | | | | | | |
| 75.0 | 22.86 | | | | | | | | | | | | |
| 77.5 | 23.62 | | | | | | | | | | | | |
| 80.0 | 24.38 | | | 80.0 | 24.38 | | | | | | | | |

REMARKS: Continued On Page 5.

amec foster wheeler — GEOTECHNICAL BRANCH, NASHVILLE, TENNESSEE — LOG OF BORING B-21, SHEET 1 OF 5

PROJECT: ALCOA HIGHWAY WIDENING (SR-115) RETAINING WALLS 7 AND 8 — DRILLER: TRI-STATE DRILLING
PROJECT NO.: 7681-15-002 — ON-SITE REP.: J. MASON
BORING NO. / LOCATION: STA 6+010, 14.3 m Left — DRY ON COMPLETION ?: YES
DATE: July 29, 2015 — SURFACE ELEV.: 958.1 FT. 292.0 M
REFUSAL: DEPTH NA FT. M ELEV. FT. M
SAMPLED 90.0 FT. 27.4 M
TOP OF ROCK: DEPTH NA FT. M ELEV. FT. M
BEGAN CORING: DEPTH NA FT. M ELEV. FT. M
FOOTAGE CORED (LF): 0.0 FT. 0.0 M
BOTTOM OF HOLE: DEPTH 90.0 FT. 27.4 M ELEV. 868.1 FT. 264.6 M
BORING ADVANCED BY: POWER AUGERING X WASHBORING

WATER LEVEL DATA (IF APPLICABLE): COMPLETION: DEPTH FT. M, ELEV. FT. M; AFTER 24 HRS.: DEPTH FT. M, ELEV. FT. M; LDW AT: DEPTH FT. M, ELEV. FT. M

| STRATUM DEPTH FT. | STRATUM DEPTH M. | SAMPLE DEPTH FROM FT. | SAMPLE DEPTH FROM M. | SAMPLE DEPTH TO FT. | SAMPLE DEPTH TO M. | SAMPLE OR RUN NO. | SAMPLE TYPE | SPLE/CORE RECOV'D (IN.) | SPT VALUES 6" | 6" | 6" | N | STRATUM DESCRIPTION |
|---|---|---|---|---|---|---|---|---|---|---|---|---|---|
| | | 0.0 | 0.00 | | | | A | | | | | | |
| | | 1.0 | 0.30 | 1.0 | 0.30 | | | | | | | | |
| 2.5 | 0.76 | | | | | S-1 | SS | 14 | 3 | 3 | 4 | 7 | Clay, sandy, reddish-brown (Moist)(Medium Stiff) |
| | | 2.5 | 0.76 | 2.5 | 0.76 | | | | | | | | |
| | | 3.5 | 1.07 | | | | A | | | | | | |
| | | | | 3.5 | 1.07 | | | | | | | | |
| 5.0 | 1.52 | | | | | | | | | | | | |
| | | 5.0 | 1.52 | 5.0 | 1.52 | S-2 | SS | 14 | 2 | 3 | 5 | 8 | DO1 |
| | | | | 6.0 | 1.83 | | | | | | | | |
| | | 6.0 | 1.83 | | | | A | | | | | | |
| 7.5 | 2.29 | | | | | | | | | | | | |
| | | | | 7.5 | 2.29 | S-3 | SS | 18 | 2 | 6 | 8 | 14 | DO1 (stiff) |
| | | 7.5 | 2.29 | | | | | | | | | | |
| | | | | 8.5 | 2.59 | | A | | | | | | |
| | | 8.5 | 2.59 | | | | | | | | | | |
| 10.0 | 3.05 | | | | | | | | | | | | |
| | | 10.0 | 3.05 | 10.0 | 3.05 | S-4 | SS | 16 | 3 | 5 | 6 | 11 | DO3 |
| | | | | | | | | | | | | | |
| | | | | | | | A | | | | | | |
| 12.5 | 3.81 | | | | | | | | | | | | |
| | | | | | | | | | | | | | Sand (F-M), silty, reddish-brown (Moist)(Loose) |
| | | 13.5 | 4.11 | | | | | | | | | | |
| | | | | 13.5 | 4.11 | | | | | | | | |
| 15.0 | 4.57 | | | | | | | | | | | | |
| | | 15.0 | 4.57 | | | S-5 | SS | 14 | 2 | 4 | 5 | 9 | |
| | | | | 15.0 | 4.57 | | | | | | | | |
| | | | | | | | A | | | | | | |
| 17.5 | 5.33 | | | | | | | | | | | | |
| | | | | | | | | | | | | | |
| | | 18.5 | 5.64 | | | | | | | | | | |
| | | | | 18.5 | 5.64 | | | | | | | | |
| 20.0 | 6.10 | | | | | S-6 | SS | 18 | 2 | 4 | 3 | 7 | DO5 |
| | | | | 20.0 | 6.10 | | | | | | | | |

REMARKS: Continued On Page 2.

amec foster wheeler — GEOTECHNICAL BRANCH, NASHVILLE, TENNESSEE — LOG OF BORING B-21, SHEET 3 OF 5

PROJECT: ALCOA HIGHWAY WIDENING (SR-115) RETAINING WALLS 7 AND 8 — DRILLER: TRI-STATE DRILLING
PROJECT NO.: 7681-15-002 — ON-SITE REP.: J. MASON
BORING NO. / LOCATION: STA 6+010, 14.3 m Left — DRY ON COMPLETION ?: YES
DATE: July 29, 2015 — SURFACE ELEV.: 958.1 FT. 292.0 M
REFUSAL: DEPTH NA FT. M ELEV. FT. M
SAMPLED 90.0 FT. 27.4 M
TOP OF ROCK: DEPTH NA FT. M ELEV. FT. M
BEGAN CORING: DEPTH NA FT. M ELEV. FT. M
FOOTAGE CORED (LF): 0.0 FT. 0.0 M
BOTTOM OF HOLE: DEPTH 90.0 FT. 27.4 M ELEV. 868.1 FT. 264.6 M
BORING ADVANCED BY: POWER AUGERING X WASHBORING

WATER LEVEL DATA (IF APPLICABLE): COMPLETION: DEPTH FT. M, ELEV. FT. M; AFTER 24 HRS.: DEPTH FT. M, ELEV. FT. M; LDW AT: DEPTH FT. M, ELEV. FT. M

| STRATUM DEPTH FT. | STRATUM DEPTH M. | SAMPLE DEPTH FROM FT. | SAMPLE DEPTH FROM M. | SAMPLE DEPTH TO FT. | SAMPLE DEPTH TO M. | SAMPLE OR RUN NO. | SAMPLE TYPE | SPLE/CORE RECOV'D (IN.) | SPT VALUES 6" | 6" | 6" | N | DESCRIPTION |
|---|---|---|---|---|---|---|---|---|---|---|---|---|---|
| | | 40.0 | 12.19 | | | | | | | | | | |
| 42.5 | 12.95 | | | | | | A | | | | | | |
| | | | | 43.5 | 13.26 | | | | | | | | |
| | | 43.5 | 13.26 | | | | | | | | | | |
| 45.0 | 13.72 | | | | | | | | | | | | |
| | | 45.0 | 13.72 | 45.0 | 13.72 | S-11 | SS | 18 | 4 | 4 | 6 | 10 | DO8 |
| | | | | | | | | | | | | | |
| | | | | | | | A | | | | | | |
| 47.5 | 14.48 | | | | | | | | | | | | |
| | | | | 48.5 | 14.78 | | | | | | | | |
| | | 48.5 | 14.78 | | | | | | | | | | |
| 50.0 | 15.24 | | | | | | | | | | | | |
| | | 50.0 | 15.24 | 50.0 | 15.24 | S-12 | SS | 18 | 4 | 3 | 4 | 7 | DO8 (Loose) |
| | | | | | | | | | | | | | |
| | | | | | | | A | | | | | | |
| 52.5 | 16.00 | | | | | | | | | | | | |
| | | | | 53.5 | 16.31 | | | | | | | | |
| | | 53.5 | 16.31 | | | | | | | | | | |
| 55.0 | 16.76 | | | | | | | | | | | | |
| | | 55.0 | 16.76 | 55.0 | 16.76 | S-13 | SS | 18 | 2 | 2 | 3 | 5 | DO12 |
| | | | | | | | | | | | | | |
| | | | | | | | A | | | | | | |
| 57.5 | 17.53 | | | | | | | | | | | | |
| | | | | 58.5 | 17.83 | | | | | | | | |
| | | 58.5 | 17.83 | | | | | | | | | | |
| 60.0 | 18.29 | | | | | | | | | | | | |
| | | | | 60.0 | 18.29 | S-14 | SS | 18 | 3 | 2 | 3 | 5 | DO12 |

REMARKS: Continued On Page 4.

amec foster wheeler — GEOTECHNICAL BRANCH, NASHVILLE, TENNESSEE — LOG OF BORING B-20, SHEET 3 OF 5

PROJECT: ALCOA HIGHWAY WIDENING (SR-115) RETAINING WALLS 7 AND 8 — DRILLER: TRI-STATE DRILLING
PROJECT NO.: 7681-15-002 — ON-SITE REP.: WDS
BORING NO. / LOCATION: STA 5+995, 10.0 m Left — DRY ON COMPLETION ?: YES
DATE: July 27, 2015 — SURFACE ELEV.: 954.1 FT. 290.8 M
REFUSAL: DEPTH NA FT. M ELEV. FT. M
SAMPLED 0.0 FT. 0.0 M
TOP OF ROCK: DEPTH NA FT. M ELEV. FT. M
BEGAN CORING: DEPTH NA FT. M ELEV. FT. M
FOOTAGE CORED (LF): 0.0 FT. 0.0 M
BOTTOM OF HOLE: DEPTH 85.0 FT. 25.9 M ELEV. 869.1 FT. 264.9 M
BORING ADVANCED BY: POWER AUGERING X WASHBORING

WATER LEVEL DATA (IF APPLICABLE): COMPLETION: DEPTH FT. M, ELEV. FT. M; AFTER 24 HRS.: DEPTH FT. M, ELEV. FT. M; LDW AT: DEPTH FT. M, ELEV. FT. M

| STRATUM DEPTH FT. | STRATUM DEPTH M. | SAMPLE DEPTH FROM FT. | SAMPLE DEPTH FROM M. | SAMPLE DEPTH TO FT. | SAMPLE DEPTH TO M. | SAMPLE OR RUN NO. | SAMPLE TYPE | SPLE/CORE RECOV'D (IN.) | SPT VALUES 6" | 6" | 6" | N | DESCRIPTION |
|---|---|---|---|---|---|---|---|---|---|---|---|---|---|
| | | 40.0 | 12.19 | | | | | | | | | | |
| 42.5 | 12.95 | | | | | | | | | | | | Sand, slightly silty, brown (Moist)(Loose) |
| 45.0 | 13.72 | | | | | | | | | | | | |
| 47.5 | 14.48 | | | | | | | | | | | | |
| 50.0 | 15.24 | | | | | | A | | | | | | |
| 52.5 | 16.00 | | | | | | | | | | | | |
| 55.0 | 16.76 | | | | | | | | | | | | |
| 57.5 | 17.53 | | | 58.0 | 17.68 | | | | | | | | |
| | | 58.0 | 17.68 | | | | | | | | | | |
| 60.0 | 18.29 | | | 60.0 | 18.29 | | | A | | | | | |

REMARKS: Continued On Page 4.

amec foster wheeler — GEOTECHNICAL BRANCH, NASHVILLE, TENNESSEE — LOG OF BORING B-20, SHEET 5 OF 5

PROJECT: ALCOA HIGHWAY WIDENING (SR-115) RETAINING WALLS 7 AND 8 — DRILLER: TRI-STATE DRILLING
PROJECT NO.: 7681-15-002 — ON-SITE REP.: WDS
BORING NO. / LOCATION: STA 5+995, 10.0 m Left — DRY ON COMPLETION ?: YES
DATE: July 27, 2015 — SURFACE ELEV.: 954.1 FT. 290.8 M
REFUSAL: DEPTH NA FT. M ELEV. FT. M
SAMPLED 0.0 FT. 0.0 M
TOP OF ROCK: DEPTH NA FT. M ELEV. FT. M
BEGAN CORING: DEPTH NA FT. M ELEV. FT. M
FOOTAGE CORED (LF): 0.0 FT. 0.0 M
BOTTOM OF HOLE: DEPTH 85.0 FT. 25.9 M ELEV. 869.1 FT. 264.9 M
BORING ADVANCED BY: POWER AUGERING X WASHBORING

WATER LEVEL DATA (IF APPLICABLE): COMPLETION: DEPTH FT. M, ELEV. FT. M; AFTER 24 HRS.: DEPTH FT. M, ELEV. FT. M; LDW AT: DEPTH FT. M, ELEV. FT. M

| STRATUM DEPTH FT. | STRATUM DEPTH M. | SAMPLE DEPTH FROM FT. | SAMPLE DEPTH FROM M. | SAMPLE DEPTH TO FT. | SAMPLE DEPTH TO M. | SAMPLE OR RUN NO. | SAMPLE TYPE | SPLE/CORE RECOV'D (IN.) | SPT VALUES 6" | 6" | 6" | N | DESCRIPTION |
|---|---|---|---|---|---|---|---|---|---|---|---|---|---|
| | | 80.0 | 24.38 | | | | | | | | | | |
| 82.5 | 25.15 | | | | | | | | | | | | Sand, slightly silty, brown (Moist)(Loose) |
| | | | | | | | A | | | | | | |
| 85.0 | 25.91 | | | 85.0 | 25.91 | | | | | | | | |
| 87.5 | 26.67 | | | | | | | | | | | | BORING TERMINATED @ 85' DRY ON COMPLETION |
| 90.0 | 27.43 | | | | | | | | | | | | |
| 92.5 | 28.19 | | | | | | | | | | | | |
| 95.0 | 28.96 | | | | | | | | | | | | |
| 97.5 | 29.72 | | | | | | | | | | | | |
| 100.0 | 30.48 | | | | | | | | | | | | |

REMARKS:

amec foster wheeler — GEOTECHNICAL BRANCH, NASHVILLE, TENNESSEE — LOG OF BORING B-21, SHEET 2 OF 5

PROJECT: ALCOA HIGHWAY WIDENING (SR-115) RETAINING WALLS 7 AND 8 — DRILLER: TRI-STATE DRILLING
PROJECT NO.: 7681-15-002 — ON-SITE REP.: J. MASON
BORING NO. / LOCATION: STA 6+010, 14.3 m Left — DRY ON COMPLETION ?: YES
DATE: July 29, 2015 — SURFACE ELEV.: 958.1 FT. 292.0 M
REFUSAL: DEPTH NA FT. M ELEV. FT. M
SAMPLED 90.0 FT. 27.4 M
TOP OF ROCK: DEPTH NA FT. M ELEV. FT. M
BEGAN CORING: DEPTH NA FT. M ELEV. FT. M
FOOTAGE CORED (LF): 0.0 FT. 0.0 M
BOTTOM OF HOLE: DEPTH 90.0 FT. 27.4 M ELEV. 868.1 FT. 264.6 M
BORING ADVANCED BY: POWER AUGERING X WASHBORING

WATER LEVEL DATA (IF APPLICABLE): COMPLETION: DEPTH FT. M, ELEV. FT. M; AFTER 24 HRS.: DEPTH FT. M, ELEV. FT. M; LDW AT: DEPTH FT. M, ELEV. FT. M

| STRATUM DEPTH FT. | STRATUM DEPTH M. | SAMPLE DEPTH FROM FT. | SAMPLE DEPTH FROM M. | SAMPLE DEPTH TO FT. | SAMPLE DEPTH TO M. | SAMPLE OR RUN NO. | SAMPLE TYPE | SPLE/CORE RECOV'D (IN.) | SPT VALUES 6" | 6" | 6" | N | DESCRIPTION |
|---|---|---|---|---|---|---|---|---|---|---|---|---|---|
| | | 20.0 | 6.10 | | | | | | | | | | |
| 22.5 | 6.86 | | | | | | A | | | | | | |
| | | | | 23.5 | 7.16 | | | | | | | | |
| | | 23.5 | 7.163 | | | | | | | | | | |
| 25.0 | 7.62 | | | | | | | | | | | | |
| | | 25.0 | 7.62 | 25.0 | 7.62 | S-7 | SS | 18 | 3 | 3 | 3 | 6 | DO5 |
| | | | | | | | | | | | | | |
| | | | | | | | A | | | | | | |
| 27.5 | 8.38 | | | | | | | | | | | | |
| | | | | 28.5 | 8.69 | | | | | | | | |
| | | 28.5 | 8.687 | | | | | | | | | | |
| 30.0 | 9.14 | | | | | | | | | | | | |
| | | 30.0 | 9.144 | 30.0 | 9.14 | S-8 | SS | 18 | 5 | 5 | 6 | 11 | Sand (F-M), silty, brown (Moist)(Medium Dense) (Decomposed Sandstone/ Siltstone) |
| | | | | | | | | | | | | | |
| | | | | | | | A | | | | | | |
| 32.5 | 9.91 | | | | | | | | | | | | |
| | | | | 33.5 | 10.21 | | | | | | | | |
| | | 33.5 | 10.21 | | | | | | | | | | |
| 35.0 | 10.67 | | | | | | | | | | | | |
| | | 35.0 | 10.67 | 35.0 | 10.67 | S-9 | SS | 18 | 5 | 6 | 5 | 11 | DO8 |
| | | | | | | | | | | | | | |
| | | | | | | | A | | | | | | |
| 37.5 | 11.43 | | | | | | | | | | | | |
| | | | | 38.5 | 11.73 | | | | | | | | |
| | | 38.5 | 11.73 | | | | | | | | | | |
| 40.0 | 12.19 | | | | | S-10 | SS | 18 | 6 | 6 | 6 | 12 | DO8 |
| | | | | 40.0 | 12.19 | | | | | | | | |

REMARKS: Continued On Page 3.

amec foster wheeler — GEOTECHNICAL BRANCH, NASHVILLE, TENNESSEE — LOG OF BORING B-21, SHEET 4 OF 5

PROJECT: ALCOA HIGHWAY WIDENING (SR-115) RETAINING WALLS 7 AND 8 — DRILLER: TRI-STATE DRILLING
PROJECT NO.: 7681-15-002 — ON-SITE REP.: J. MASON
BORING NO. / LOCATION: STA 6+010, 14.3 m Left — DRY ON COMPLETION ?: YES
DATE: July 29, 2015 — SURFACE ELEV.: 958.1 FT. 292.0 M
REFUSAL: DEPTH NA FT. M ELEV. FT. M
SAMPLED 90.0 FT. 27.4 M
TOP OF ROCK: DEPTH NA FT. M ELEV. FT. M
BEGAN CORING: DEPTH NA FT. M ELEV. FT. M
FOOTAGE CORED (LF): 0.0 FT. 0.0 M
BOTTOM OF HOLE: DEPTH 90.0 FT. 27.4 M ELEV. 868.1 FT. 264.6 M
BORING ADVANCED BY: POWER AUGERING X WASHBORING

WATER LEVEL DATA (IF APPLICABLE): COMPLETION: DEPTH FT. M, ELEV. FT. M; AFTER 24 HRS.: DEPTH FT. M, ELEV. FT. M; LDW AT: DEPTH FT. M, ELEV. FT. M

| STRATUM DEPTH FT. | STRATUM DEPTH M. | SAMPLE DEPTH FROM FT. | SAMPLE DEPTH FROM M. | SAMPLE DEPTH TO FT. | SAMPLE DEPTH TO M. | SAMPLE OR RUN NO. | SAMPLE TYPE | SPLE/CORE RECOV'D (IN.) | SPT VALUES 6" | 6" | 6" | N | DESCRIPTION |
|---|---|---|---|---|---|---|---|---|---|---|---|---|---|
| | | 60.0 | 18.29 | | | | | | | | | | |
| 62.5 | 19.05 | | | | | | A | | | | | | |
| | | | | 63.5 | 19.35 | | | | | | | | |
| | | 63.5 | | | | | | | | | | | |
| 65.0 | 19.81 | | | | | | | | | | | | |
| | | 65.0 | 19.81 | 65.0 | 19.81 | S-15 | SS | 18 | 3 | 3 | 3 | 6 | DO12 |
| | | | | | | | | | | | | | |
| | | | | | | | A | | | | | | |
| 67.5 | 20.57 | | | | | | | | | | | | |
| | | | | 68.5 | 20.88 | | | | | | | | |
| | | 68.5 | 20.88 | | | | | | | | | | |
| 70.0 | 21.33 | | | | | | | | | | | | |
| | | 70.0 | 21.34 | 70.0 | 21.34 | S-16 | SS | 18 | 2 | 3 | 3 | 6 | DO12 |
| | | | | | | | | | | | | | |
| | | | | | | | A | | | | | | |
| 72.5 | 22.10 | | | | | | | | | | | | |
| | | | | 73.5 | 22.40 | | | | | | | | |
| | | 73.5 | 22.4 | | | | | | | | | | |
| 75.0 | 22.86 | | | | | | | | | | | | |
| | | 75.0 | 22.86 | 75.0 | 22.86 | S-17 | SS | 18 | 5 | 4 | 4 | 8 | DO12 |
| | | | | | | | | | | | | | |
| | | | | | | | A | | | | | | |
| 77.5 | 23.62 | | | | | | | | | | | | |
| | | | | 78.5 | 23.93 | | | | | | | | |
| | | 78.5 | 23.93 | | | | | | | | | | |
| 80.0 | 24.38 | | | | | | | | | | | | |
| | | | | 80.0 | 24.38 | S-18 | SS | 18 | 5 | 5 | 4 | 9 | DO12 |

REMARKS: Continued On Page 5.

CONTRACTOR NOTES:

1. THE GEOTECHNICAL REPORT WHICH INCLUDES DETAILED BORING RECORDS, SOIL AND ROCK TESTING DATA IS AVAILABLE UPON REQUEST. ROCK CORE SAMPLES ARE AVAILABLE FOR INSPECTION BY THE CONTRACTOR.

2. IT IS THE RESPONSIBILITY OF THE CONTRACTOR TO REVIEW THE PLANS, GEOTECHNICAL REPORT, AND BORING LOGS TO BECOME FAMILIAR WITH THE SUBSURFACE CONDITIONS PERTINENT TO THE ASSOCIATED WORK TO BE CONDUCTED BY THE CONTRACTOR. THE CONTRACTOR SHOULD ALSO CONSIDER THEIR EXPERIENCE IN THE PROJECT'S GEOLOGIC AND SUBSURFACE SETTING AND THEIR EXPERIENCE IN DEALING WITH VARIABLE SUBSURFACE CONDITIONS ACROSS A PROJECT SITE TO BASE THEIR BID UPON AND DECISIONS REGARDING APPROPRIATE EQUIPMENT TO BE UTILIZED.

PRELIMINARY PLANS

SEALED BY

TENNESSEE METRIC D.O.T.

COORDINATES ARE NAD/83(1995), ARE DATUM ADJUSTED BY THE FACTOR OF 1.000 AND TIED TO THE TGRN. ALL ELEVATIONS ARE REFERENCED TO THE NAVD 1988.

STATE OF TENNESSEE
DEPARTMENT OF TRANSPORTATION

SOIL BORING LOGS
RETAINING WALLS
NO. 7 AND 8

SCALE: AS NOTED

9/9/2015
R:_Infrastructure Project Files\2015 Infra Projects\7681-15-002 ALCOA Hwy (SR 115) WALLS 7 AND 8\06 - CADD\03-23 RETAINING WALL NO. 7 AND 8 SOIL BORING LOGS.SHT

| TYPE | YEAR | PROJECT NO. | SHEET NO. |
|---|---|---|---|
| CONST. | 2015 | 47026-3279-14 | ---- |

amec foster wheeler — GEOTECHNICAL BRANCH, NASHVILLE, TENNESSEE

LOG OF BORING B-21, SHEET 5 OF 5

PROJECT: ALCOA HIGHWAY WIDENING (SR-115) RETAINING WALLS 7 AND 8 — DRILLER: TRI-STATE DRILLING
PROJECT NO.: 7681-15-002 — ON-SITE REP.: J. MASON
BORING NO. / LOCATION: STA 6+010, 14.3 m Left — DRY ON COMPLETION ?: YES
DATE: July 29, 2015 — SURFACE ELEV.: 958.1 FT. 292.0 M
REFUSAL: DEPTH NA FT. M — ELEV. FT. M
SAMPLED: 90.0 FT. 27.4 M
TOP OF ROCK: DEPTH NA FT. M — ELEV. FT. M
BEGAN CORING: DEPTH NA FT. M — ELEV. FT. M
FOOTAGE CORED (LF): 0.0 FT. 0.0 M
BOTTOM OF HOLE: DEPTH 90.0 FT. 27.4 M — ELEV. 868.1 FT. 264.6 M
BORING ADVANCED BY: POWER AUGERING X — WASHBORING

WATER LEVEL DATA (IF APPLICABLE): COMPLETION: DEPTH FT. M, ELEV. FT. M; AFTER 24 HRS.: DEPTH FT. M, ELEV. FT. M; LDW AT: DEPTH FT. M, ELEV. FT. M

| STRATUM DEPTH FT. | STRATUM DEPTH M. | SAMPLE DEPTH FROM FT. | FROM M. | TO FT. | TO M. | SAMPLE OR RUN NO. | SAMPLE TYPE | SPLE/CORE RECOV'D (IN.) | SPT VALUES 6" | 6" | 6" | N | DESCRIPTION |
|---|---|---|---|---|---|---|---|---|---|---|---|---|---|
| 82.5 | 25.15 | 80.0 | 24.38 | | | | | | | | | | |
| | | 83.5 | 25.45 | | | | A | | | | | | |
| 85.0 | 25.91 | 85.0 | 25.91 | | | S-19 | SS | 18 | 5 | 5 | 5 | 10 | DO12, grayish-brown |
| 87.5 | 26.67 | 88.5 | 26.97 | | | | A | | | | | | |
| 90.0 | 27.43 | | | 90.0 | 27.43 | S-20 | SS | 17 | 4 | 3 | 5 | 8 | DO19 |
| 92.5 | 28.19 | | | | | | | | | | | | NO REFUSAL @ 90.0' DRY ON COMPLETION |
| 95.0 | 28.96 | | | | | | | | | | | | |
| 97.5 | 29.72 | | | | | | | | | | | | |
| 100.0 | 30.48 | | | | | | | | | | | | |

REMARKS:

amec foster wheeler — GEOTECHNICAL BRANCH, NASHVILLE, TENNESSEE

LOG OF BORING B-22, SHEET 2 OF 3

PROJECT: ALCOA HIGHWAY WIDENING (SR-115) RETAINING WALLS 7 AND 8 — DRILLER: TRI-STATE DRILLING
PROJECT NO.: 7681-15-002 — ON-SITE REP.: WDS
BORING NO. / LOCATION: STA 6+025, 17.4 m Left — DRY ON COMPLETION ?: YES
DATE: July 14, 2015 — SURFACE ELEV.: 959.1 FT. 292.3 M
REFUSAL: DEPTH 49.0 FT. 14.9 M — ELEV. 910.1 FT. 277.4 M
SAMPLED: 0.0 FT. 0.0 M
TOP OF ROCK: DEPTH NA FT. M — ELEV. FT. M
BEGAN CORING: DEPTH NA FT. M — ELEV. FT. M
FOOTAGE CORED (LF): 0.0 FT. 0.0 M
BOTTOM OF HOLE: DEPTH 49.0 FT. 14.9 M — ELEV. 910.1 FT. 277.4 M
BORING ADVANCED BY: POWER AUGERING X — WASHBORING

WATER LEVEL DATA (IF APPLICABLE): COMPLETION: DEPTH FT. M, ELEV. FT. M; AFTER 24 HRS.: DEPTH FT. M, ELEV. FT. M; LDW AT: DEPTH FT. M, ELEV. FT. M

| STRATUM DEPTH FT. | STRATUM DEPTH M. | SAMPLE DEPTH FROM FT. | FROM M. | TO FT. | TO M. | SAMPLE OR RUN NO. | SAMPLE TYPE | SPLE/CORE RECOV'D (IN.) | SPT VALUES 6" | 6" | 6" | N | DESCRIPTION |
|---|---|---|---|---|---|---|---|---|---|---|---|---|---|
| | | 20.0 | 6.10 | | | | | | | | | | Clay, sandy, silty, reddish-brown (Moist) |
| 22.5 | 6.86 | 22.0 | 6.706 | | | | | | | | | | |
| | | | | 22.0 | 6.71 | | | | | | | | |
| 25.0 | 7.62 | | | | | | | | | | | | |
| 27.5 | 8.38 | | | | | | | | | | | | |
| 30.0 | 9.14 | | | | | | | | | | | | |
| 32.5 | 9.91 | | | | | | | | | | | | |
| 35.0 | 10.67 | | | | | | | | | | | | |
| 37.5 | 11.43 | | | | | | | | | | | | |
| 40.0 | 12.19 | | | 40.0 | 12.19 | | A | | | | | | Sand, silty, clayey, brown/ reddish-brown (moist)(Variably loose/ 30 seconds per 5 feet) |

REMARKS: Continued On Page 3.

amec foster wheeler — GEOTECHNICAL BRANCH, NASHVILLE, TENNESSEE

LOG OF BORING B-23, SHEET 1 OF 6

PROJECT: ALCOA HIGHWAY WIDENING (SR-115) RETAINING WALLS 7 AND 8 — DRILLER: TRI-STATE DRILLING
PROJECT NO.: 7681-15-002 — ON-SITE REP.: J. Mason
BORING NO. / LOCATION: STA 6+040, 14.3 m Left — DRY ON COMPLETION ?: YES
DATE: July 30, 2015 — SURFACE ELEV.: 962.1 FT. 293.2 M
REFUSAL: DEPTH 42.3 FT. 12.9 M — ELEV. 919.8 FT. 280.4 M
SAMPLED: 102.0 FT. 31.1 M
TOP OF ROCK: DEPTH 42.3 FT. 12.9 M — ELEV. 919.8 FT. 280.4 M
BEGAN CORING: DEPTH 42.3 FT. 12.9 M — ELEV. 919.8 FT. 280.4 M
FOOTAGE CORED (LF): 31.1 FT. 9.5 M
BOTTOM OF HOLE: DEPTH 102.0 FT. 31.1 M — ELEV. 860.1 FT. 262.2 M
BORING ADVANCED BY: CORING — POWER AUGERING X — WASHBORING X

WATER LEVEL DATA (IF APPLICABLE): COMPLETION: DEPTH FT. M, ELEV. FT. M; AFTER 24 HRS.: DEPTH FT. M, ELEV. FT. M; LDW AT: DEPTH 42.5 FT. 13.0 M, ELEV. 919.6 FT. 280.3 M

| STRATUM DEPTH FT. | STRATUM DEPTH M. | SAMPLE DEPTH FROM FT. | FROM M. | TO FT. | TO M. | SAMPLE OR RUN NO. | SAMPLE TYPE | SPLE/CORE RECOV'D (IN.) | SPT VALUES 6" | 6" | 6" | N | STRATUM DESCRIPTION |
|---|---|---|---|---|---|---|---|---|---|---|---|---|---|
| | | 0.0 | 0.00 | | | | A | | | | | | |
| 2.5 | 0.76 | 1.0 | 0.30 | | | | | | | | | | |
| | | 2.5 | 0.76 | | | S-1 | SS | 13 | 1 | 2 | 2 | 4 | Clay, sandy, silty, reddish-brown (wet)(Soft) |
| 5.0 | 1.52 | 3.5 | 1.07 | | | | A | | | | | | |
| | | 5.0 | 1.52 | | | S-2 | SS | 13 | 3 | 2 | 3 | 5 | DO1 (Moist)(Medium Stiff) |
| 7.5 | 2.29 | 6.0 | 1.83 | | | | A | | | | | | |
| | | 7.5 | 2.29 | | | S-3 | SS | 14 | 3 | 4 | 4 | 8 | DO2 |
| 10.0 | 3.05 | 8.5 | 2.59 | | | | A | | | | | | |
| | | 10.0 | 3.05 | | | S-4 | SS | 14 | 3 | 4 | 6 | 10 | DO2 (Stiff) |
| 12.5 | 3.81 | | | | | | A | | | | | | |
| 15.0 | 4.57 | 13.5 | 4.11 | | | S-5 | SS | 15 | 2 | 5 | 5 | 10 | DO4 |
| 17.5 | 5.33 | 15.0 | 4.57 | | | | A | | | | | | |
| 20.0 | 6.10 | 18.5 | 5.64 | | | S-6 | SS | 16 | 3 | 4 | 6 | 10 | Sand (F-M), silty, dark brown (Moist)(Loose) |

REMARKS: Continued On Page 2. Set Casing advancer to 74' after no core recovery. Washbore and SS sampled to 102.0'.

amec foster wheeler — GEOTECHNICAL BRANCH, NASHVILLE, TENNESSEE

LOG OF BORING B-23, SHEET 3 OF 6

PROJECT: ALCOA HIGHWAY WIDENING (SR-115) RETAINING WALLS 7 AND 8 — DRILLER: TRI-STATE DRILLING
PROJECT NO.: 7681-15-002 — ON-SITE REP.: J. Mason
BORING NO. / LOCATION: STA 6+040, 14.3 m Left — Y ON COMPLETIO: YES
DATE: July 30, 2015 — SURFACE ELEV.: 962.1 FT. 293.2 M
REFUSAL: DEPTH 42.3 FT. 12.9 M — ELEV. 919.8 FT. 280.4 M
SAMPLED: 102.0 FT. 31.1 M
TOP OF ROCK: DEPTH 42.3 FT. 12.9 M — ELEV. 919.8 FT. 280.4 M
BEGAN CORING: DEPTH 42.3 FT. 12.9 M — ELEV. 919.8 FT. 280.4 M
FOOTAGE CORED (LF): 31.1 FT. 9.5 M
BOTTOM OF HOLE: DEPTH 102.0 FT. 31.1 M — ELEV. 860.1 FT. 262.2 M
BORING ADVANCED BY: CORING — POWER AUGERING X — WASHBORING X

WATER LEVEL DATA (IF APPLICABLE): COMPLETION: DEPTH FT. M, ELEV. FT. M; AFTER 24 HRS.: DEPTH FT. M, ELEV. FT. M; LDW AT: DEPTH 42.5 FT. 13.0 M, ELEV. 919.6 FT. 280.3 M

| STRATUM DEPTH FT. | STRATUM DEPTH M. | SAMPLE DEPTH FROM FT. | FROM M. | TO FT. | TO M. | SAMPLE OR RUN NO. | SAMPLE TYPE | SPLE/CORE RECOV'D (IN.) | SPT VALUES 6" | 6" | 6" | N | DESCRIPTION |
|---|---|---|---|---|---|---|---|---|---|---|---|---|---|
| | | 40.0 | 12.19 | | | | | | | | | | DO9 |
| 42.5 | 12.95 | 42.5 | 12.95 | 42.5 | 12.95 | S-11 | SS | 0 | 50 | | | 50 | AUGER REFUSAL @ 42.5' |
| | | 42.5 | 12.95 | | | RUN 1, RAN 1.0 REC 0.0, RQD 0% | | | | | | | BEGIN NO CORING @ 42.5', 100% DWL Sandstone, calcarious, dark gray to weathered reddish-brown, DIPS 60° TO 40° |
| | | 43.5 | 13.26 | 43.5 | 13.26 | RUN 2 RAN 2.2 REC 1.1 RQD 0% | | | | | | | variably stained, leached, weathered. Loss 1.1 |
| 45.0 | 13.72 | | | | | | | | | | | | |
| | | 45.5 | 13.87 | | | RUN 3 RAN 2.8 REC 0.7 RQD 0% | | | | | | | DIPS 40° TO 55° |
| 47.5 | 14.48 | | | 45.5 | 13.87 | | | | | | | | DO R2 open cavity 46.4 to 48.3 Loss 2.1 |
| | | 48.3 | 14.72 | 48.3 | 14.72 | | | | | | | | |
| 50.0 | 15.24 | | | | | RUN 4 RAN 5.1 REC 0.8 RQD 1% | | | | | | | Continue open cavity 48.3 to 50.3 No Recovery 50.3 to 52.7 |
| 52.5 | 16.00 | | | | | | | | | | | | Sandstone, calcarious, dark gray, weathered DIPS 30° TO 85° |
| | | 53.4 | 16.28 | 53.4 | 16.28 | | | | | | | | |
| 55.0 | 16.76 | | | | | RUN 5 RAN 5.0 REC 0.0 RQD 0% | | | | | | | NO RECOVERY |
| 57.5 | 17.53 | | | | | | | | | | | | |
| | | 58.4 | 17.8 | 58.4 | 17.80 | | | | | | | | |
| 60.0 | 18.29 | | | 60.0 | 18.29 | RUN 6 RAN 5.0 REC 0.0 RQD 0% | | | | | | | NO RECOVERY |

REMARKS: Continued On Page 4. sampled to 102.0'.

amec foster wheeler — GEOTECHNICAL BRANCH, NASHVILLE, TENNESSEE

LOG OF BORING B-22, SHEET 1 OF 3

PROJECT: ALCOA HIGHWAY WIDENING (SR-115) RETAINING WALLS 7 AND 8 — DRILLER: TRI-STATE DRILLING
PROJECT NO.: 7681-15-002 — ON-SITE REP.: WDS
BORING NO. / LOCATION: STA 6+025, 17.4 m Left — DRY ON COMPLETION ?: YES
DATE: July 14, 2015 — SURFACE ELEV.: 959.1 FT. 292.3 M
REFUSAL: DEPTH 49.0 FT. 14.9 M — ELEV. 910.1 FT. 277.4 M
SAMPLED: 0.0 FT. 0.0 M
TOP OF ROCK: DEPTH NA FT. M — ELEV. FT. M
BEGAN CORING: DEPTH NA FT. M — ELEV. FT. M
FOOTAGE CORED (LF): 0.0 FT. 0.0 M
BOTTOM OF HOLE: DEPTH 49.0 FT. 14.9 M — ELEV. 910.1 FT. 277.4 M
BORING ADVANCED BY: POWER AUGERING X — WASHBORING

WATER LEVEL DATA (IF APPLICABLE): COMPLETION: DEPTH FT. M, ELEV. FT. M; AFTER 24 HRS.: DEPTH FT. M, ELEV. FT. M; LDW AT: DEPTH FT. M, ELEV. FT. M

| STRATUM DEPTH FT. | STRATUM DEPTH M. | SAMPLE DEPTH FROM FT. | FROM M. | TO FT. | TO M. | SAMPLE OR RUN NO. | SAMPLE TYPE | SPLE/CORE RECOV'D (IN.) | SPT VALUES 6" | 6" | 6" | N | STRATUM DESCRIPTION |
|---|---|---|---|---|---|---|---|---|---|---|---|---|---|
| | | 0.0 | 0.00 | | | | | | | | | | Boring in 8 foot cut/fill |
| 2.5 | 0.76 | | | | | | A | | | | | | |
| 5.0 | 1.52 | | | | | | | | | | | | Clay, sandy, silty, reddish-brown (Fill)(Moist) |
| 7.5 | 2.29 | | | 9.0 | 2.74 | | | | | | | | |
| 10.0 | 3.05 | 9.0 | 2.74 | | | | | | | | | | |
| 12.5 | 3.81 | | | | | | | | | | | | |
| 15.0 | 4.57 | | | | | | A | | | | | | Clay, sandy, silty, reddish-brown (Moist) |
| 17.5 | 5.33 | | | | | | | | | | | | |
| 20.0 | 6.10 | | | 20.0 | 6.10 | | | | | | | | |

REMARKS: Continued On Page 2.

amec foster wheeler — GEOTECHNICAL BRANCH, NASHVILLE, TENNESSEE

LOG OF BORING B-22, SHEET 3 OF 3

PROJECT: ALCOA HIGHWAY WIDENING (SR-115) RETAINING WALLS 7 AND 8 — DRILLER: TRI-STATE DRILLING
PROJECT NO.: 7681-15-002 — ON-SITE REP.: WDS
BORING NO. / LOCATION: STA 6+025, 17.4 m Left — DRY ON COMPLETION ?: YES
DATE: July 14, 2015 — SURFACE ELEV.: 959.1 FT. 292.3 M
REFUSAL: DEPTH 49.0 FT. 14.9 M — ELEV. 910.1 FT. 277.4 M
SAMPLED: 0.0 FT. 0.0 M
TOP OF ROCK: DEPTH NA FT. M — ELEV. FT. M
BEGAN CORING: DEPTH NA FT. M — ELEV. FT. M
FOOTAGE CORED (LF): 0.0 FT. 0.0 M
BOTTOM OF HOLE: DEPTH 49.0 FT. 14.9 M — ELEV. 910.1 FT. 277.4 M
BORING ADVANCED BY: POWER AUGERING X — WASHBORING

WATER LEVEL DATA (IF APPLICABLE): COMPLETION: DEPTH FT. M, ELEV. FT. M; AFTER 24 HRS.: DEPTH FT. M, ELEV. FT. M; LDW AT: DEPTH FT. M, ELEV. FT. M

| STRATUM DEPTH FT. | STRATUM DEPTH M. | SAMPLE DEPTH FROM FT. | FROM M. | TO FT. | TO M. | SAMPLE OR RUN NO. | SAMPLE TYPE | SPLE/CORE RECOV'D (IN.) | SPT VALUES 6" | 6" | 6" | N | DESCRIPTION |
|---|---|---|---|---|---|---|---|---|---|---|---|---|---|
| | | 40.0 | 12.19 | | | | | | | | | | Sand, silty, clayey, brown/ reddish-brown (moist)(Variably loose/ 30 seconds per 5 feet) |
| 42.5 | 12.95 | | | | | | | | | | | | |
| 45.0 | 13.72 | | | | | | A | | | | | | |
| 47.5 | 14.48 | | | | | | | | | | | | |
| | | | | 49.0 | 14.94 | | | | | | | | |
| 50.0 | 15.24 | | | | | | | | | | | | AUGER REFUSAL @ 49' DRY ON COMPLETION |
| 52.5 | 16.00 | | | | | | | | | | | | |
| 55.0 | 16.76 | | | | | | | | | | | | |
| 57.5 | 17.53 | | | | | | | | | | | | |
| 60.0 | 18.29 | | | | | | | | | | | | |

REMARKS: Continued On Page 2.

amec foster wheeler — GEOTECHNICAL BRANCH, NASHVILLE, TENNESSEE

LOG OF BORING B-23, SHEET 2 OF 6

PROJECT: ALCOA HIGHWAY WIDENING (SR-115) RETAINING WALLS 7 AND 8 — DRILLER: TRI-STATE DRILLING
PROJECT NO.: 7681-15-002 — ON-SITE REP.: J. Mason
BORING NO. / LOCATION: STA 6+040, 14.3 m Left — DRY ON COMPLETION ?: YES
DATE: July 30, 2015 — SURFACE ELEV.: 962.1 FT. 293.2 M
REFUSAL: DEPTH 42.3 FT. 12.9 M — ELEV. 919.8 FT. 280.4 M
SAMPLED: 102.0 FT. 31.1 M
TOP OF ROCK: DEPTH 42.3 FT. 12.9 M — ELEV. 919.8 FT. 280.4 M
BEGAN CORING: DEPTH 42.3 FT. 12.9 M — ELEV. 919.8 FT. 280.4 M
FOOTAGE CORED (LF): 31.1 FT. 9.5 M
BOTTOM OF HOLE: DEPTH 102.0 FT. 31.1 M — ELEV. 860.1 FT. 262.2 M
BORING ADVANCED BY: CORING — POWER AUGERING X — WASHBORING X

WATER LEVEL DATA (IF APPLICABLE): COMPLETION: DEPTH FT. M, ELEV. FT. M; AFTER 24 HRS.: DEPTH FT. M, ELEV. FT. M; LDW AT: DEPTH 42.5 FT. 13.0 M, ELEV. 919.6 FT. 280.3 M

| STRATUM DEPTH FT. | STRATUM DEPTH M. | SAMPLE DEPTH FROM FT. | FROM M. | TO FT. | TO M. | SAMPLE OR RUN NO. | SAMPLE TYPE | SPLE/CORE RECOV'D (IN.) | SPT VALUES 6" | 6" | 6" | N | DESCRIPTION |
|---|---|---|---|---|---|---|---|---|---|---|---|---|---|
| | | 20.0 | 6.10 | | | | | | | | | | |
| 22.5 | 6.86 | | | 23.5 | 7.16 | | A | | | | | | |
| | | 23.5 | 7.163 | | | S-7 | SS | 18 | 5 | 4 | 4 | 8 | DO6 |
| 25.0 | 7.62 | | | 25.0 | 7.62 | | | | | | | | |
| 27.5 | 8.38 | | | | | | A | | | | | | |
| | | 28.5 | 8.687 | 28.5 | 8.69 | | | | | | | | |
| 30.0 | 9.14 | | | 30.0 | 9.14 | S-8 | SS | 18 | 4 | 4 | 3 | 7 | DO6 |
| | | 30.0 | 9.144 | | | | | | | | | | |
| 32.5 | 9.91 | | | | | | A | | | | | | |
| | | | | 33.5 | 10.21 | | | | | | | | |
| 35.0 | 10.67 | 33.5 | 10.21 | | | S-9 | SS | 18 | 3 | 2 | 2 | 4 | DO6 (Very Loose) |
| | | 35.0 | 10.67 | 35.0 | 10.67 | | | | | | | | |
| 37.5 | 11.43 | | | | | | A | | | | | | |
| | | | | 38.5 | 11.73 | | | | | | | | |
| 40.0 | 12.19 | 38.5 | 11.73 | 40.0 | 12.19 | S-10 | SS | 18 | 3 | 1 | 1 | 2 | DO9 |

REMARKS: Continued On Page 3. sampled to 102.0'.

amec foster wheeler — GEOTECHNICAL BRANCH, NASHVILLE, TENNESSEE

LOG OF BORING B-23, SHEET 4 OF 6

PROJECT: ALCOA HIGHWAY WIDENING (SR-115) RETAINING WALLS 7 AND 8 — DRILLER: TRI-STATE DRILLING
PROJECT NO.: 7681-15-002 — ON-SITE REP.: J. Mason
BORING NO. / LOCATION: STA 6+040, 14.3 m Left — DRY ON COMPLETION ?: YES
DATE: July 30, 2015 — SURFACE ELEV.: 962.1 FT. 293.2 M
REFUSAL: DEPTH 42.3 FT. 12.9 M — ELEV. 919.8 FT. 280.4 M
SAMPLED: 102.0 FT. 31.1 M
TOP OF ROCK: DEPTH 42.3 FT. 12.9 M — ELEV. 919.8 FT. 280.4 M
BEGAN CORING: DEPTH 42.3 FT. 12.9 M — ELEV. 919.8 FT. 280.4 M
FOOTAGE CORED (LF): 31.1 FT. 9.5 M
BOTTOM OF HOLE: DEPTH 102.0 FT. 31.1 M — ELEV. 860.1 FT. 262.2 M
BORING ADVANCED BY: CORING — POWER AUGERING X — WASHBORING

WATER LEVEL DATA (IF APPLICABLE): COMPLETION: DEPTH FT. M, ELEV. FT. M; AFTER 24 HRS.: DEPTH FT. M, ELEV. FT. M; LDW AT: DEPTH 42.5 FT. 13.0 M, ELEV. 919.6 FT. 280.3 M

| STRATUM DEPTH FT. | STRATUM DEPTH M. | SAMPLE DEPTH FROM FT. | FROM M. | TO FT. | TO M. | SAMPLE OR RUN NO. | SAMPLE TYPE | SPLE/CORE RECOV'D (IN.) | SPT VALUES 6" | 6" | 6" | N | DESCRIPTION |
|---|---|---|---|---|---|---|---|---|---|---|---|---|---|
| | | 60.0 | 18.29 | | | | | | | | | | NO RECOVERY |
| 62.5 | 19.05 | | | | | | | | | | | | |
| | | | | 63.4 | 19.32 | | | | | | | | |
| | | 63.4 | 19.32 | | | RUN 7 RAN 5.0 REC 0.0 RQD 0% | | | | | | | |
| 65.0 | 19.81 | | | | | | | | | | | | NO RECOVERY |
| 67.5 | 20.57 | | | | | | | | | | | | |
| | | | | 68.3 | 20.82 | | | | | | | | |
| | | 68.3 | 20.82 | | | RUN 8 RAN 5.0 REC 0.0 RQD 0% | | | | | | | |
| 70.0 | 21.33 | | | | | | | | | | | | NO RECOVERY |
| 72.5 | 22.10 | | | | | | | | | | | | CASING ADVANCER INSTALLED TO 74' RESUME SAMPLING AT 74' |
| | | | | 73.4 | 22.37 | | | | | | | | |
| | | 73.4 | 22.37 | 74.0 | 22.56 | | | | | | | | |
| | | 74.0 | 22.56 | | | | | | | | | | |
| 75.0 | 22.86 | | | 75.5 | 23.01 | S-12 | SS | 11 | 1 | 1 | 1 | 2 | Decomposed Siltstone/ Sandstone (Wet)(Very Loose) |
| | | 75.5 | 23.0 | | | | | | | | | | |
| 77.5 | 23.62 | | | | | | Washbore | | | | | | |
| | | | | 79.4 | 24.20 | | | | | | | | |
| 80.0 | 24.38 | 79.4 | 24.2 | 80.0 | 24.38 | | | | | | | | |

REMARKS: Continued On Page 5. sampled to 102.0'.

CONTRACTOR NOTES:

1. THE GEOTECHNICAL REPORT WHICH INCLUDES DETAILED BORING RECORDS, SOIL AND ROCK TESTING DATA IS AVAILABLE UPON REQUEST. ROCK CORE SAMPLES ARE AVAILABLE FOR INSPECTION BY THE CONTRACTOR.

2. IT IS THE RESPONSIBILITY OF THE CONTRACTOR TO REVIEW THE PLANS, GEOTECHNICAL REPORT, AND BORING LOGS TO BECOME FAMILIAR WITH THE SUBSURFACE CONDITIONS PERTINENT TO THE ASSOCIATED WORK TO BE CONDUCTED BY THE CONTRACTOR. THE CONTRACTOR SHOULD ALSO CONSIDER THEIR EXPERIENCE IN THE PROJECT'S GEOLOGIC AND SUBSURFACE SETTING AND THEIR EXPERIENCE IN DEALING WITH VARIABLE SUBSURFACE CONDITIONS ACROSS A PROJECT SITE TO BASE THEIR BID UPON AND DECISIONS REGARDING APPROPRIATE EQUIPMENT TO BE UTILIZED.

PRELIMINARY PLANS

SEALED BY

TENNESSEE METRIC D.O.T.

COORDINATES ARE NAD/83(1995), ARE DATUM ADJUSTED BY THE FACTOR OF 1.000 AND TIED TO THE TGRN. ALL ELEVATIONS ARE REFERENCED TO THE NAVD 1988.

STATE OF TENNESSEE
DEPARTMENT OF TRANSPORTATION

SOIL BORING LOGS
RETAINING WALLS
NO. 7 AND 8

SCALE: AS NOTED

9/9/2015
R:_Infrastructure Project Files\2015 Infra Projects\7681-15-002 ALCOA Hwy (SR 115) WALLS 7 AND 8\06 - CADD\03-23-RETAINING WALL NO. 7 AND 8 SOIL BORING LOGS.SHT

| TYPE | YEAR | PROJECT NO. | SHEET NO. |
|---|---|---|---|
| CONST. | 2015 | 47026-3279-14 | ---- |

amec foster wheeler — GEOTECHNICAL BRANCH, NASHVILLE, TENNESSEE — LOG OF BORING B-23, SHEET 5 OF 6

PROJECT: ALCOA HIGHWAY WIDENING (SR-115) RETAINING WALLS 7 AND 8 — DRILLER: TRI-STATE DRILLING
PROJECT NO.: 7681-15-002 — ON-SITE REP.: J. Mason
BORING NO. / LOCATION: STA 6+040, 14.3 m Left — DRY ON COMPLETION ?: YES
DATE: July 30, 2015 — SURFACE ELEV.: 962.1 FT. 293.2 M
REFUSAL: DEPTH 42.3 FT. 12.9 M — ELEV. 919.8 FT. 280.4 M
SAMPLED 102.0 FT. 31.1 M
TOP OF ROCK: DEPTH 42.3 FT. 12.9 M — ELEV. 919.8 FT. 280.4 M
BEGAN CORING: DEPTH 42.3 FT. 12.9 M — ELEV. 919.8 FT. 280.4 M
FOOTAGE CORED (LF): 31.1 FT. 9.5 M
BOTTOM OF HOLE: DEPTH 102.0 FT. 31.1 M — ELEV. 860.1 FT. 262.2 M
BORING ADVANCED BY: CORING — POWER AUGERING: X — WASHBORING: X

WATER LEVEL DATA (IF APPLICABLE): COMPLETION: DEPTH FT. M; ELEV. FT. M. AFTER 24 HRS.: DEPTH FT. M; ELEV. FT. M. LDW AT: DEPTH 42.5 FT. 13.0 M; ELEV. 919.6 FT. 280.3 M

| STRATUM DEPTH FT. | STRATUM DEPTH M. | SAMPLE DEPTH FROM FT. | FROM M. | TO FT. | TO M. | SAMPLE OR RUN NO. | SAMPLE TYPE | SPLE/CORE RECOV'D (IN.) | SPT VALUES 6" | 6" | 6" | N | DESCRIPTION |
|---|---|---|---|---|---|---|---|---|---|---|---|---|---|
| | | | | 80.9 | 24.66 | S-13 | SS | | 1 | 1 | 2 | 3 | Sand (F-M), silty, dark brown (Wet)(Very Loose)(Decomposed Sandstone/ Siltstone) |
| 82.5 | 25.15 | 80.9 | 24.66 | | | | Washbore | | | | | | |
| | | | | 84.7 | 25.82 | | | | | | | | |
| 85.0 | 25.91 | 84.7 | 25.82 | | | | | | | | | | |
| | | | | 86.2 | 26.27 | S-14 | SS | 15 | 2 | 1 | 0 | 1 | DO13 |
| 87.5 | 26.67 | 86.2 | 26.27 | | | | Washbore | | | | | | |
| | | | | 89.0 | 27.13 | | | | | | | | |
| 90.0 | 27.43 | 89.0 | 27.13 | | | S-15 | SS | 13 | 0 | 1 | 1 | 2 | DO13 |
| | | | | 90.5 | 27.58 | | | | | | | | |
| 92.5 | 28.19 | 90.5 | 27.58 | | | | Washbore | | | | | | |
| | | | | 94.0 | 28.65 | | | | | | | | |
| 95.0 | 28.96 | 94.0 | 28.65 | | | S-16 | SS | 18 | 1 | 0 | 1 | 1 | DO13 |
| | | | | 95.5 | 29.11 | | | | | | | | |
| 97.5 | 29.72 | 95.5 | 29.11 | | | | Washbore | | | | | | |
| | | | | 99.0 | 30.18 | | | | | | | | |
| 100.0 | 30.48 | 99.0 | 30.18 | 100.0 | 30.48 | S-17 | SS | 18 | 1 | 0 | 1 | 1 | DO13 (Spoon Fell to 102.0') |

REMARKS: Continued On Page 6. sampled to 102.0'.

amec foster wheeler — GEOTECHNICAL BRANCH, NASHVILLE, TENNESSEE — LOG OF BORING B-24, SHEET 1 OF 3

PROJECT: ALCOA HIGHWAY WIDENING (SR-115) RETAINING WALLS 7 AND 8 — DRILLER: TRI-STATE DRILLING
PROJECT NO.: 7681-15-002 — ON-SITE REP.: WDS
BORING NO. / LOCATION: STA 6+055, 16.0 m Left — DRY ON COMPLETION ?: YES
DATE: July 14, 2015 — SURFACE ELEV.: 964.3 FT. 293.9 M
REFUSAL: DEPTH 42.5 FT. 13.0 M — ELEV. 921.8 FT. 281.0 M
SAMPLED 0.0 FT. 0.0 M
TOP OF ROCK: DEPTH NA FT. M — ELEV. FT. M
BEGAN CORING: DEPTH NA FT. M — ELEV. FT. M
FOOTAGE CORED (LF): 0.0 FT. 0.0 M
BOTTOM OF HOLE: DEPTH 42.5 FT. 13.0 M — ELEV. 921.8 FT. 281.0 M
BORING ADVANCED BY: — POWER AUGERING: X — WASHBORING:

WATER LEVEL DATA (IF APPLICABLE): COMPLETION: DEPTH FT. M; ELEV. FT. M. AFTER 24 HRS.: DEPTH FT. M; ELEV. FT. M. LDW AT: DEPTH FT. M; ELEV. FT. M

| STRATUM DEPTH FT. | STRATUM DEPTH M. | SAMPLE DEPTH FROM FT. | FROM M. | TO FT. | TO M. | SAMPLE OR RUN NO. | SAMPLE TYPE | SPLE/CORE RECOV'D (IN.) | SPT VALUES 6" | 6" | 6" | N | STRATUM DESCRIPTION |
|---|---|---|---|---|---|---|---|---|---|---|---|---|---|
| | | 0.0 | 0.00 | | | | | | | | | | Boring in 8 foot cut. Sandstone slabs on outslope |
| 2.5 | 0.76 | | | | | | | | | | | | |
| 5.0 | 1.52 | | | | | | | | | | | | |
| 7.5 | 2.29 | | | | | | | | | | | | |
| 10.0 | 3.05 | | | | | | A | | | | | | Clay, sandy, silty, reddish-brown with sandstone fragments (Moist) |
| 12.5 | 3.81 | | | | | | | | | | | | |
| 15.0 | 4.57 | | | | | | | | | | | | |
| 17.5 | 5.33 | | | | | | | | | | | | |
| 20.0 | 6.10 | | | 20.0 | 6.10 | | | | | | | | |

REMARKS: Continued On Page 2.

amec foster wheeler — GEOTECHNICAL BRANCH, NASHVILLE, TENNESSEE — LOG OF BORING B-24, SHEET 3 OF 3

PROJECT: ALCOA HIGHWAY WIDENING (SR-115) RETAINING WALLS 7 AND 8 — DRILLER: TRI-STATE DRILLING
PROJECT NO.: 7681-15-002 — ON-SITE REP.: WDS
BORING NO. / LOCATION: STA 6+055, 16.0 m Left — DRY ON COMPLETION ?: YES
DATE: July 14, 2015 — SURFACE ELEV.: 964.3 FT. 293.9 M
REFUSAL: DEPTH 42.5 FT. 13.0 M — ELEV. 921.8 FT. 281.0 M
SAMPLED 0.0 FT. 0.0 M
TOP OF ROCK: DEPTH NA FT. M — ELEV. FT. M
BEGAN CORING: DEPTH NA FT. M — ELEV. FT. M
FOOTAGE CORED (LF): 0.0 FT. 0.0 M
BOTTOM OF HOLE: DEPTH 42.5 FT. 13.0 M — ELEV. 921.8 FT. 281.0 M
BORING ADVANCED BY: — POWER AUGERING: X — WASHBORING:

WATER LEVEL DATA (IF APPLICABLE): COMPLETION: DEPTH FT. M; ELEV. FT. M. AFTER 24 HRS.: DEPTH FT. M; ELEV. FT. M. LDW AT: DEPTH FT. M; ELEV. FT. M

| STRATUM DEPTH FT. | STRATUM DEPTH M. | SAMPLE DEPTH FROM FT. | FROM M. | TO FT. | TO M. | SAMPLE OR RUN NO. | SAMPLE TYPE | SPLE/CORE RECOV'D (IN.) | SPT VALUES 6" | 6" | 6" | N | DESCRIPTION |
|---|---|---|---|---|---|---|---|---|---|---|---|---|---|
| | | 40.0 | 12.19 | | | | A | | | | | | Sand, silty, clayey, reddish-brown/ brown (moist) |
| 42.5 | 12.95 | | | 42.5 | 12.95 | | | | | | | | AUGER REFUSAL @ 42.5' DRY ON COMPLETION |
| 45.0 | 13.72 | | | | | | | | | | | | |
| 47.5 | 14.48 | | | | | | | | | | | | |
| 50.0 | 15.24 | | | | | | | | | | | | |
| 52.5 | 16.00 | | | | | | | | | | | | |
| 55.0 | 16.76 | | | | | | | | | | | | |
| 57.5 | 17.53 | | | | | | | | | | | | |
| 60.0 | 18.29 | | | | | | | | | | | | |

REMARKS:

amec foster wheeler — GEOTECHNICAL BRANCH, NASHVILLE, TENNESSEE — LOG OF BORING B-25, SHEET 2 OF 3

PROJECT: ALCOA HIGHWAY WIDENING (SR-115) RETAINING WALLS 7 AND 8 — DRILLER: TRI-STATE DRILLING
PROJECT NO.: 7681-15-002 — ON-SITE REP.: J. Mason
BORING NO. / LOCATION: STA 6+070, 12.2 m Left — DRY ON COMPLETION ?: YES
DATE: July 31, 2015 — SURFACE ELEV.: 966.8 FT. 294.7 M
REFUSAL: DEPTH 8.0 FT. 2.4 M — ELEV. 958.8 FT. 292.2 M
SAMPLED 8.0 FT. 2.4 M
TOP OF ROCK: DEPTH 8.0 FT. 2.4 M — ELEV. 958.8 FT. 292.2 M
BEGAN CORING: DEPTH 8.0 FT. 2.4 M — ELEV. 958.8 FT. 292.2 M
FOOTAGE CORED (LF): 44.7 FT. 13.6 M
BOTTOM OF HOLE: DEPTH 52.7 FT. 16.1 M — ELEV. 914.1 FT. 278.6 M
BORING ADVANCED BY: CORING — POWER AUGERING: X — WASHBORING:

WATER LEVEL DATA (IF APPLICABLE): COMPLETION: DEPTH FT. M; ELEV. FT. M. AFTER 24 HRS.: DEPTH FT. M; ELEV. FT. M. LDW AT: DEPTH 8.0 FT. 2.4 M; ELEV. 958.8 FT. 292.2 M

| STRATUM DEPTH FT. | STRATUM DEPTH M. | SAMPLE DEPTH FROM FT. | FROM M. | TO FT. | TO M. | SAMPLE OR RUN NO. | SAMPLE TYPE | SPLE/CORE RECOV'D (IN.) | SPT VALUES 6" | 6" | 6" | N | DESCRIPTION |
|---|---|---|---|---|---|---|---|---|---|---|---|---|---|
| | | | | 24.3 | 7.41 | RUN 4 RAN 5.0 REC 4.6 RQD 56% | | | | | | | Sandstone, calcareous, gray, weathered, variably stained, leached, weathered DIP 15° TO 60° |
| 22.5 | 6.86 | | | | | | | | | | | | |
| 25.0 | 7.62 | 24.3 | 7.407 | | | RUN 5 REC 5.0 REC 4.2 RQD 56% | | | | | | | DO R4 with open stained diagonal bedding planes DIP 20° TO 85° |
| 27.5 | 8.38 | | | | | | | | | | | | |
| | | | | 29.3 | 8.93 | | | | | | | | Core Photo 19.3 to 29.3 |
| 30.0 | 9.14 | 29.3 | 8.931 | | | RUN 6 RAN 2.0 REC 0.9 RQD 0% | | | | | | | Sandstone, calcareous, gray to wea. reddish-brown Loss 1.1 DIP 20° TO 40° |
| | | | | 31.3 | 9.54 | | | | | | | | |
| 32.5 | 9.91 | 31.3 | 9.54 | | | RUN 7 RAN 3.0 REC 1.8 RQD 50% | | | | | | | Loss 1.2 --- Cavity 32.2 to 32.6 |
| | | | | | | | | | | | | | Cavity 33.6 to 38.7 |
| | | | | 34.3 | 10.45 | | | | | | | | |
| 35.0 | 10.67 | 34.3 | 10.45 | | | RUN 8 RAN 5.0 REC 0.6 RQD 8% | | | | | | | Loss 4.4 |
| 37.5 | 11.43 | | | | | | | | | | | | |
| | | | | 39.3 | 11.98 | | | | | | | | Sandstone, calcareous, weathered Core Photo 29.3 to 39.3 |
| 40.0 | 12.19 | 39.3 | 11.98 | | | | | | | | | | Cavity 39.3 to 40.6 |

REMARKS: Continued On Page 3.

amec foster wheeler — GEOTECHNICAL BRANCH, NASHVILLE, TENNESSEE — LOG OF BORING B-23, SHEET 6 OF 6

PROJECT: ALCOA HIGHWAY WIDENING (SR-115) RETAINING WALLS 7 AND 8 — DRILLER: TRI-STATE DRILLING
PROJECT NO.: 7681-15-002 — ON-SITE REP.: J. Mason
BORING NO. / LOCATION: STA 6+040, 14.3 m Left — DRY ON COMPLETION ?: YES
DATE: July 30, 2015 — SURFACE ELEV.: 962.1 FT. 293.2 M
REFUSAL: DEPTH 42.3 FT. 12.9 M — ELEV. 919.8 FT. 280.4 M
SAMPLED 102.0 FT. 31.1 M
TOP OF ROCK: DEPTH 42.3 FT. 12.9 M — ELEV. 919.8 FT. 280.4 M
BEGAN CORING: DEPTH 42.3 FT. 12.9 M — ELEV. 919.8 FT. 280.4 M
FOOTAGE CORED (LF): 31.1 FT. 9.5 M
BOTTOM OF HOLE: DEPTH 102.0 FT. 31.1 M — ELEV. 860.1 FT. 262.2 M
BORING ADVANCED BY: CORING — POWER AUGERING: X — WASHBORING: X

WATER LEVEL DATA (IF APPLICABLE): COMPLETION: DEPTH FT. M; ELEV. FT. M. AFTER 24 HRS.: DEPTH FT. M; ELEV. FT. M. LDW AT: DEPTH 42.5 FT. 13.0 M; ELEV. 919.6 FT. 280.3 M

| STRATUM DEPTH FT. | STRATUM DEPTH M. | SAMPLE DEPTH FROM FT. | FROM M. | TO FT. | TO M. | SAMPLE OR RUN NO. | SAMPLE TYPE | SPLE/CORE RECOV'D (IN.) | SPT VALUES 6" | 6" | 6" | N | DESCRIPTION |
|---|---|---|---|---|---|---|---|---|---|---|---|---|---|
| | | 100.0 | 30.48 | | | | | | | | | | DO13 |
| | | | | 102.0 | 31.09 | | | | | | | | |
| 102.5 | 31.24 | | | | | | | | | | | | BORING TERMINATED AT 102.0' |
| 105.0 | 32.00 | | | | | | | | | | | | |
| 107.5 | 32.76 | | | | | | | | | | | | |
| 110.0 | 33.52 | | | | | | | | | | | | |
| 112.5 | 34.29 | | | | | | | | | | | | |
| 115.0 | 35.05 | | | | | | | | | | | | |
| 117.5 | 35.81 | | | | | | | | | | | | |
| 120.0 | 36.57 | | | | | | | | | | | | |

REMARKS: sampled to 102.0'.

amec foster wheeler — GEOTECHNICAL BRANCH, NASHVILLE, TENNESSEE — LOG OF BORING B-24, SHEET 2 OF 3

PROJECT: ALCOA HIGHWAY WIDENING (SR-115) RETAINING WALLS 7 AND 8 — DRILLER: TRI-STATE DRILLING
PROJECT NO.: 7681-15-002 — ON-SITE REP.: WDS
BORING NO. / LOCATION: STA 6+055, 16.0 m Left — DRY ON COMPLETION ?: YES
DATE: July 14, 2015 — SURFACE ELEV.: 964.3 FT. 293.9 M
REFUSAL: DEPTH 42.5 FT. 13.0 M — ELEV. 921.8 FT. 281.0 M
SAMPLED 0.0 FT. 0.0 M
TOP OF ROCK: DEPTH NA FT. M — ELEV. FT. M
BEGAN CORING: DEPTH NA FT. M — ELEV. FT. M
FOOTAGE CORED (LF): 0.0 FT. 0.0 M
BOTTOM OF HOLE: DEPTH 42.5 FT. 13.0 M — ELEV. 921.8 FT. 281.0 M
BORING ADVANCED BY: — POWER AUGERING: X — WASHBORING:

WATER LEVEL DATA (IF APPLICABLE): COMPLETION: DEPTH FT. M; ELEV. FT. M. AFTER 24 HRS.: DEPTH FT. M; ELEV. FT. M. LDW AT: DEPTH FT. M; ELEV. FT. M

| STRATUM DEPTH FT. | STRATUM DEPTH M. | SAMPLE DEPTH FROM FT. | FROM M. | TO FT. | TO M. | SAMPLE OR RUN NO. | SAMPLE TYPE | SPLE/CORE RECOV'D (IN.) | SPT VALUES 6" | 6" | 6" | N | DESCRIPTION |
|---|---|---|---|---|---|---|---|---|---|---|---|---|---|
| | | 20.0 | 6.10 | | | | | | | | | | Clay, sandy, silty, reddish-brown with sandstone fragments (Moist) |
| 22.5 | 6.86 | | | | | | A | | | | | | |
| 25.0 | 7.62 | | | 26.0 | 7.92 | | | | | | | | Weathered rock |
| | | 26.0 | 7.925 | 26.5 | 8.08 | | | | | | | | |
| | | 26.5 | 8.077 | | | | | | | | | | |
| 27.5 | 8.38 | | | | | | | | | | | | |
| 30.0 | 9.14 | | | | | | | | | | | | |
| 32.5 | 9.91 | | | | | | A | | | | | | Sand, silty, clayey, reddish-brown/ brown (moist) |
| 35.0 | 10.67 | | | | | | | | | | | | |
| 37.5 | 11.43 | | | | | | | | | | | | |
| 40.0 | 12.19 | | | 40.0 | 12.19 | | | | | | | | |

REMARKS: Continued On Page 3.

amec foster wheeler — GEOTECHNICAL BRANCH, NASHVILLE, TENNESSEE — LOG OF BORING B-25, SHEET 1 OF 3

PROJECT: ALCOA HIGHWAY WIDENING (SR-115) RETAINING WALLS 7 AND 8 — DRILLER: TRI-STATE DRILLING
PROJECT NO.: 7681-15-002 — ON-SITE REP.: J. Mason
BORING NO. / LOCATION: STA 6+070, 12.2 m Left — DRY ON COMPLETION ?: YES
DATE: July 31, 2015 — SURFACE ELEV.: 966.8 FT. 294.7 M
REFUSAL: DEPTH 8.0 FT. 2.4 M — ELEV. 958.8 FT. 292.2 M
SAMPLED 8.0 FT. 2.4 M
TOP OF ROCK: DEPTH 8.0 FT. 2.4 M — ELEV. 958.8 FT. 292.2 M
BEGAN CORING: DEPTH 8.0 FT. 2.4 M — ELEV. 958.8 FT. 292.2 M
FOOTAGE CORED (LF): 44.7 FT. 13.6 M
BOTTOM OF HOLE: DEPTH 52.7 FT. 16.1 M — ELEV. 914.1 FT. 278.6 M
BORING ADVANCED BY: CORING — POWER AUGERING: X — WASHBORING:

WATER LEVEL DATA (IF APPLICABLE): COMPLETION: DEPTH FT. M; ELEV. FT. M. AFTER 24 HRS.: DEPTH FT. M; ELEV. FT. M. LDW AT: DEPTH 8.0 FT. 2.4 M; ELEV. 958.8 FT. 292.2 M

| STRATUM DEPTH FT. | STRATUM DEPTH M. | SAMPLE DEPTH FROM FT. | FROM M. | TO FT. | TO M. | SAMPLE OR RUN NO. | SAMPLE TYPE | SPLE/CORE RECOV'D (IN.) | SPT VALUES 6" | 6" | 6" | N | STRATUM DESCRIPTION |
|---|---|---|---|---|---|---|---|---|---|---|---|---|---|
| | | 0.0 | 0.00 | 1.0 | 0.30 | | A | | | | | | |
| | | 1.0 | 0.30 | 2.5 | 0.76 | S-1 | SS | 14 | 2 | 3 | 2 | 5 | Clay, sandy, silty, dark reddish-brown (Moist)(Medium Stiff) |
| 2.5 | 0.76 | 2.5 | 0.76 | 3.5 | 1.07 | | A | | | | | | |
| | | 3.5 | 1.07 | 5.0 | 1.52 | S-2 | SS | 16 | 2 | 3 | 2 | 5 | Sand (F-M), silty, reddish-brown with sandstone fragments (Moist)(Loose) (Decomposed Sandstone) |
| 5.0 | 1.52 | 5.0 | 1.52 | 6.0 | 1.83 | | A | | | | | | |
| | | 6.0 | 1.83 | 7.5 | 2.29 | S-3 | SS | 18 | 2 | 3 | 5 | 8 | DO2, clayey, to yellowish-brown |
| 7.5 | 2.29 | 7.5 | 2.29 | 8.0 | 2.44 | | A | | | | | | |
| | | 8.0 | 2.44 | 9.3 | 2.83 | RUN 1 RAN 1.0, REC 0 RQD 0% | | | | | | | Auger Refusal @ 8.0', Dry Prior to Coring Begin NQ Coring @ 8.0', 100% DWL NO RECOVERY |
| 10.0 | 3.05 | 9.3 | 2.83 | 14.3 | 4.36 | RUN 2 RAN 5.0 REC 3.8 RQD 62% | | | | | | | Sandstone, calcareous, gray, weathered, reddish-brown, Loss 1.2 DIP 30° to 75° cavity 12.7 to 13.3 |
| 12.5 | 3.81 | | | | | | | | | | | | Sandstone, calcareous, gray, weathered, reddish-brown Cavity 14.4 to 16.8 |
| 15.0 | 4.57 | 14.3 | 4.36 | 19.3 | 5.88 | RUN 3 RAN 5.0 REC 2.2 RQD 28% | | | | | | | Sandstone, calcareous, gray, weathered reddish-brown Core Photo 9.3 to 19.3 |
| 17.5 | 5.33 | | | | | | | | | | | | |
| 20.0 | 6.10 | 19.3 | 5.88 | 20.0 | 6.10 | | | | | | | | |

REMARKS: Continued On Page 2.

amec foster wheeler — GEOTECHNICAL BRANCH, NASHVILLE, TENNESSEE — LOG OF BORING B-25, SHEET 3 OF 3

PROJECT: ALCOA HIGHWAY WIDENING (SR-115) RETAINING WALLS 7 AND 8 — DRILLER: TRI-STATE DRILLING
PROJECT NO.: 7681-15-002 — ON-SITE REP.: J. Mason
BORING NO. / LOCATION: STA 6+070, 12.2 m Left — DRY ON COMPLETION ?: YES
DATE: July 31, 2015 — SURFACE ELEV.: 966.8 FT. 294.7 M
REFUSAL: DEPTH 8.0 FT. 2.4 M — ELEV. 958.8 FT. 292.2 M
SAMPLED 8.0 FT. 2.4 M
TOP OF ROCK: DEPTH 8.0 FT. 2.4 M — ELEV. 958.8 FT. 292.2 M
BEGAN CORING: DEPTH 8.0 FT. 2.4 M — ELEV. 958.8 FT. 292.2 M
FOOTAGE CORED (LF): 44.7 FT. 13.6 M
BOTTOM OF HOLE: DEPTH 52.7 FT. 16.1 M — ELEV. 914.1 FT. 278.6 M
BORING ADVANCED BY: CORING — POWER AUGERING: X — WASHBORING:

WATER LEVEL DATA (IF APPLICABLE): COMPLETION: DEPTH FT. M; ELEV. FT. M. AFTER 24 HRS.: DEPTH FT. M; ELEV. FT. M. LDW AT: DEPTH 8.0 FT. 2.4 M; ELEV. 958.8 FT. 292.2 M

| STRATUM DEPTH FT. | STRATUM DEPTH M. | SAMPLE DEPTH FROM FT. | FROM M. | TO FT. | TO M. | SAMPLE OR RUN NO. | SAMPLE TYPE | SPLE/CORE RECOV'D (IN.) | SPT VALUES 6" | 6" | 6" | N | DESCRIPTION |
|---|---|---|---|---|---|---|---|---|---|---|---|---|---|
| | | | | | | | | | | | | | Continue cavity 39.3 to 40.6 |
| 42.5 | 12.95 | | | | | RUN 9 RAN 5.0 REC 3.7 RQD 68% | | | | | | | Sandstone, calcareous, gray, wea. reddish-brown Loss 1.3 DIP 10° |
| | | | | 44.3 | 13.50 | | | | | | | | |
| 45.0 | 13.72 | 44.3 | 13.5 | | | RUN 10 RAN 3.4 REC 2.5 RQD 10% | | | | | | | DO R9, variably fractured, weathered with open stained vertical fractures Loss 0.9 DIP 10° TO 20° and 70° to 90° |
| 47.5 | 14.48 | | | 47.7 | 14.54 | | | | | | | | |
| | | 47.7 | 14.54 | | | RUN 11 RAN 5.0 REC 4.9 RQD 92% | | | | | | | Core Photo 39.3 to 49.5 |
| 50.0 | 15.24 | | | | | | | | | | | | DIP 10° TO 15° |
| | | | | 52.0 | 15.85 | | | | | | | | $q_u$=115.7 MPa, $\gamma$=26.41 kN/m$^3$, 32.5% quartz |
| 52.5 | 16.00 | | | 52.7 | 16.06 | | | | | | | | Core Photo 49.5 to 52.6 |
| 55.0 | 16.76 | | | | | | | | | | | | BORING TERMINATED @ 52.7' 100% DWL CORE BARREL BROKE |
| 57.5 | 17.53 | | | | | | | | | | | | |
| 60.0 | 18.29 | | | | | | | | | | | | |

REMARKS:

CONTRACTOR NOTES:

1. THE GEOTECHNICAL REPORT WHICH INCLUDES DETAILED BORING RECORDS, SOIL AND ROCK TESTING DATA IS AVAILABLE UPON REQUEST. ROCK CORE SAMPLES ARE AVAILABLE FOR INSPECTION BY THE CONTRACTOR.

2. IT IS THE RESPONSIBILITY OF THE CONTRACTOR TO REVIEW THE PLANS, GEOTECHNICAL REPORT, AND BORING LOGS TO BECOME FAMILIAR WITH THE SUBSURFACE CONDITIONS PERTINENT TO THE ASSOCIATED WORK TO BE CONDUCTED BY THE CONTRACTOR. THE CONTRACTOR SHOULD ALSO CONSIDER THEIR EXPERIENCE IN THE PROJECT'S GEOLOGIC AND SUBSURFACE SETTING AND THEIR EXPERIENCE IN DEALING WITH VARIABLE SUBSURFACE CONDITIONS ACROSS A PROJECT SITE TO BASE THEIR BID UPON AND DECISIONS REGARDING APPROPRIATE EQUIPMENT TO BE UTILIZED.

PRELIMINARY PLANS

SEALED BY

TENNESSEE METRIC D.O.T.

COORDINATES ARE NAD/83(1995), ARE DATUM ADJUSTED BY THE FACTOR OF 1.000 AND TIED TO THE TGRN. ALL ELEVATIONS ARE REFERENCED TO THE NAVD 1988.

STATE OF TENNESSEE
DEPARTMENT OF TRANSPORTATION

SOIL BORING LOGS
RETAINING WALLS
NO. 7 AND 8

SCALE: AS NOTED

9/9/2015
R:_Infrastructure Project Files\2015 Infra Projects\7681-15-002 ALCOA Hwy (SR 115) WALLS 7 AND 8\06 - CADD\03-23 RETAINING WALL NO. 7 AND 8 SOIL BORING LOGS.SHT

| TYPE | YEAR | PROJECT NO. | SHEET NO. |
|---|---|---|---|
| CONST. | 2015 | 47026-3279-14 | _____ |

## amec foster wheeler — GEOTECHNICAL BRANCH, NASHVILLE, TENNESSEE — LOG OF BORING B-26, SHEET 1 OF 1

PROJECT: ALCOA HIGHWAY WIDENING (SR-115) RETAINING WALLS 7 AND 8 — DRILLER: TRI-STATE DRILLING
PROJECT NO.: 7681-15-002 — ON-SITE REP.: WDS
BORING NO. / LOCATION: STA 6+085, 14.3 m Left — DRY ON COMPLETION ?: YES
DATE: August 5, 2015 — SURFACE ELEV. 969.9 FT. 295.6 M
REFUSAL: DEPTH 10.5 FT. 3.2 M ELEV. 959.4 FT. 292.4 M
SAMPLED: NA FT. M
TOP OF ROCK: DEPTH NA FT. M ELEV. FT. M
BEGAN CORING: DEPTH NA FT. M ELEV. FT. M
FOOTAGE CORED (LF): 0.0 FT. 0.0 M
BOTTOM OF HOLE DEPTH: 10.5 FT. 3.2 M ELEV. 959.4 FT. 292.4 M
WATER LEVEL DATA (IF APPLICABLE): COMPLETION: DEPTH FT. M, ELEV. FT. M; AFTER 24 HRS.: DEPTH FT. M, ELEV. FT. M; LDW AT: DEPTH FT. M, ELEV. FT. M
BORING ADVANCED BY: ____ POWER AUGERING X WASHBORING ____

Stratum depth scale (FT. – M.): 2.5 – 0.76, 5.0 – 1.52, 7.5 – 2.29, 10.0 – 3.05, 12.5 – 3.81, 15.0 – 4.57, 17.5 – 5.33, 20.0 – 6.10

| From FT. | From M. | To FT. | To M. | Sample or Run No. | Sample Type | Sple/Core Recov'd (in.) | 6" | 6" | 6" | N | Stratum Description |
|---|---|---|---|---|---|---|---|---|---|---|---|
| 0.0 | 0.00 | 10.5 | 3.20 | | A | | | | | | Clay, very sandy, silty, reddish-brown |
| | | | | | | | | | | | AUGER REFUSAL @ 10.5' DRY ON COMPLETION |

REMARKS:

## amec foster wheeler — GEOTECHNICAL BRANCH, NASHVILLE, TENNESSEE — LOG OF BORING B-27, SHEET 2 OF 6

PROJECT: ALCOA HIGHWAY WIDENING (SR-115) RETAINING WALLS 7 AND 8 — DRILLER: TRI-STATE DRILLING
PROJECT NO.: 7681-15-002 — ON-SITE REP.: MH
BORING NO. / LOCATION: Sta 6+100, 16.9 m Left — DRY ON COMPLETION ?: YES, PRIOR TO CORING
DATE: 8-17-2015 TO 8-21-2015 — SURFACE ELEV. 972.3 FT. 296.4 M
REFUSAL: DEPTH 20.8 FT. 6.3 M ELEV. 951.5 FT. 290.0 M
SAMPLED: 20.8 FT. 6.3 M
TOP OF ROCK: DEPTH 20.8 FT. 6.3 M ELEV. 951.5 FT. 290.0 M
BEGAN CORING: DEPTH 20.8 FT. 6.3 M ELEV. 951.5 FT. 290.0 M
FOOTAGE CORED (LF): 89.1 FT. 27.2 M
BOTTOM OF HOLE DEPTH: 109.9 FT. 33.5 M ELEV. 862.4 FT. 262.9 M
WATER LEVEL DATA (IF APPLICABLE): COMPLETION: DEPTH FT. M, ELEV. FT. M; AFTER 24 HRS.: DEPTH FT. M, ELEV. FT. M; LDW AT: DEPTH 20.8 FT. 6.3 M, ELEV. 951.5 FT. 290.0 M
BORING ADVANCED BY: CORING POWER AUGERING X WASHBORING ____

Stratum depth scale (FT. – M.): 22.5 – 6.86, 25.0 – 7.62, 27.5 – 8.38, 30.0 – 9.14, 32.5 – 9.91, 35.0 – 10.67, 37.5 – 11.43, 40.0 – 12.19

| From FT. | From M. | To FT. | To M. | Sample or Run No. | Sample Type | Sple/Core Recov'd (in.) | 6" | 6" | 6" | N | Description |
|---|---|---|---|---|---|---|---|---|---|---|---|
| 20.0 | 6.10 | 20.8 | 6.34 | | A | | | | | | AUGER REFUSAL @ 20.8', DRY PRIOR TO CORING |
| 20.8 | | 24.2 | 7.38 | RUN 1 RAN 3.4 REC 0.7 RQD 0% | | | | | | | BEGIN HQ CORING @ 20.8', 100% DWL; Weathered Sandstone Fragments Probable side wall coring along vertical weathering feature; Loss 2.7' |
| 24.2 | 7.376 | 25.4 | 7.74 | RUN 2 RAN 1.1 REC 0.9 RQD 82% | | | | | | | Sandstone, calcareous, gray, wea. to reddish-brown CORRECTED DEPTH 25.2 |
| 25.4 | 7.742 | 30.4 | 9.27 | RUN 3 RAN 5.0 REC 4.0 RQD 60% | | | | | | | --- open cavities 27.3' to 27.6' and 28.1' to 28.6' |
| 30.4 | 9.266 | 35.5 | 10.82 | RUN 4 RAN 5.1 REC 4.8 RQD 40% | | | | | | | 33.8' to 34.5' partial core, variably stained leached weathered, Loss 0.2' |
| 35.5 | 10.82 | 35.9 | 10.94 | RUN 5 | | | | | | | CORING CHANGED TO NQ SIZE @ 35.5' |
| 35.9 | 10.94 | 39.9 | 12.16 | RUN 6 RAN 4.0 REC 3.9 RQD 55% | | | | | | | 35.9' to 36.3' open, stained, diagonal bedding plane 38.9' to 39.8' partial core, open, stained, leached Loss 0.1' |

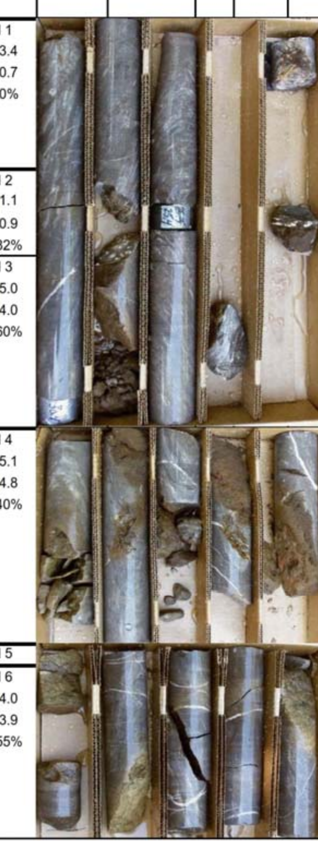

REMARKS: Continued On Page 3. BORING LOCATED IN 8 FOOT CUT.

## amec foster wheeler — GEOTECHNICAL BRANCH, NASHVILLE, TENNESSEE — LOG OF BORING B-27, SHEET 4 OF 6

PROJECT: ALCOA HIGHWAY WIDENING (SR-115) RETAINING WALLS 7 AND 8 — DRILLER: TRI-STATE DRILLING
PROJECT NO.: 7681-15-002 — ON-SITE REP.: MH
BORING NO. / LOCATION: Sta 6+100, 16.9 m Left — DRY ON COMPLETION ?: YES, PRIOR TO CORING
DATE: 8-17-2015 TO 8-21-2015 — SURFACE ELEV. 972.3 FT. 296.4 M
REFUSAL: DEPTH 20.8 FT. 6.3 M ELEV. 951.5 FT. 290.0 M
SAMPLED: 20.8 FT. 6.3 M
TOP OF ROCK: DEPTH 20.8 FT. 6.3 M ELEV. 951.5 FT. 290.0 M
BEGAN CORING: DEPTH 20.8 FT. 6.3 M ELEV. 951.5 FT. 290.0 M
FOOTAGE CORED (LF): 89.1 FT. 27.2 M
BOTTOM OF HOLE DEPTH: 109.9 FT. 33.5 M ELEV. 862.4 FT. 262.9 M
WATER LEVEL DATA (IF APPLICABLE): COMPLETION: DEPTH FT. M, ELEV. FT. M; AFTER 24 HRS.: DEPTH FT. M, ELEV. FT. M; LDW AT: DEPTH 20.8 FT. 6.3 M, ELEV. 951.5 FT. 290.0 M
BORING ADVANCED BY: CORING POWER AUGERING X WASHBORING ____

Stratum depth scale (FT. – M.): 62.5 – 19.05, 65.0 – 19.81, 67.5 – 20.57, 70.0 – 21.33, 72.5 – 22.10, 75.0 – 22.86, 77.5 – 23.62, 80.0 – 24.38

| From FT. | From M. | To FT. | To M. | Sample or Run No. | Sample Type | Sple/Core Recov'd (in.) | 6" | 6" | 6" | N | Description |
|---|---|---|---|---|---|---|---|---|---|---|---|
| 59.7 | 18.20 | 64.7 | 19.72 | RUN 11 RAN 5.0 REC 3.3 RQD 54% | | | | | | | Sandstone, calcareous, gray, variably siliceous; open stained diagonal bedding plane; 62.7 to 64.7 open stained, leached, weathered, Loss 1.7' |
| 64.7 | 19.72 | 69.7 | 21.24 | RUN 12 RAN 5.0 REC 0.0 RQD 0% | | | | | | | NO RECOVERY Probably very sandy clay filled cavity |
| 69.7 | 21.24 | 74.7 | 22.77 | RUN 13 RAN 5.0 REC 4.4 RQD 66% | | | | | | | Sandstone, calcareous, gray to weathered reddish-brown with open stained bedding planes, 73.6 to 74.7 open stained, leached with very sandy clay filled cavity Loss 0.6' |
| 74.7 | 22.77 | 79.7 | 24.29 | RUN 14 RAN 5.0 REC 5.2 RQD 100% | | | | | | | CORRECTED DEPTH 79.9' |

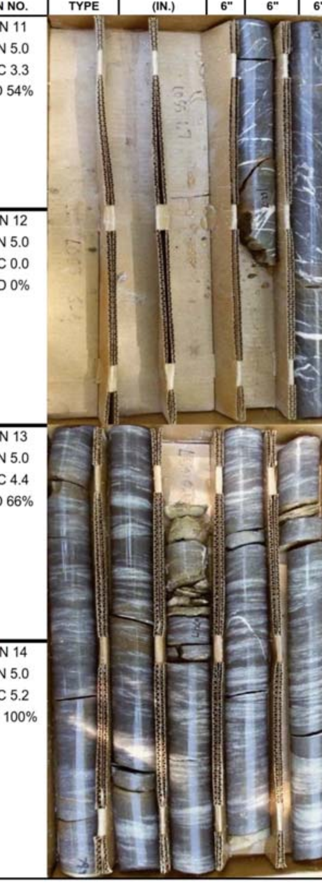

REMARKS: Continued On Page 5 BORING LOCATED IN 8 FOOT CUT.

## amec foster wheeler — GEOTECHNICAL BRANCH, NASHVILLE, TENNESSEE — LOG OF BORING B-27, SHEET 6 OF 6

PROJECT: ALCOA HIGHWAY WIDENING (SR-115) RETAINING WALLS 7 AND 8 — DRILLER: TRI-STATE DRILLING
PROJECT NO.: 7681-15-002 — ON-SITE REP.: MH
BORING NO. / LOCATION: Sta 6+100, 16.9 m Left — DRY ON COMPLETION ?: YES, PRIOR TO CORING
DATE: 8-17-2015 TO 8-21-2015 — SURFACE ELEV. 972.3 FT. 296.4 M
REFUSAL: DEPTH 20.8 FT. 6.3 M ELEV. 951.5 FT. 290.0 M
SAMPLED: 20.8 FT. 6.3 M
TOP OF ROCK: DEPTH 20.8 FT. 6.3 M ELEV. 951.5 FT. 290.0 M
BEGAN CORING: DEPTH 20.8 FT. 6.3 M ELEV. 951.5 FT. 290.0 M
FOOTAGE CORED (LF): 89.1 FT. 27.2 M
BOTTOM OF HOLE DEPTH: 109.9 FT. 33.5 M ELEV. 862.4 FT. 262.9 M
WATER LEVEL DATA (IF APPLICABLE): COMPLETION: DEPTH FT. M, ELEV. FT. M; AFTER 24 HRS.: DEPTH FT. M, ELEV. FT. M; LDW AT: DEPTH 20.8 FT. 6.3 M, ELEV. 951.5 FT. 290.0 M
BORING ADVANCED BY: CORING POWER AUGERING X WASHBORING ____

Stratum depth scale (FT. – M.): 102.5 – 31.24, 105.0 – 32.00, 107.5 – 32.76, 110.0 – 33.52, 112.5 – 34.29, 115.0 – 35.05, 117.5 – 35.81, 120.0 – 36.57

| From FT. | From M. | To FT. | To M. | Sample or Run No. | Sample Type | Sple/Core Recov'd (in.) | 6" | 6" | 6" | N | Description |
|---|---|---|---|---|---|---|---|---|---|---|---|
| 99.8 | 30.42 | 104.9 | 31.97 | RUN 19 RAN 5.1 REC 5.1 RQD 94% | | | | | | | Sandstone, calcareous, mottled gray with open stained bedding planes |
| 104.9 | 31.97 | 109.9 | 33.50 | RUN 20 RAN 5.0 REC 5.0 RQD 100% | | | | | | | |
| | | | | | | | | | | | BORING TERMINATED @ 109.0' 100% DWL |

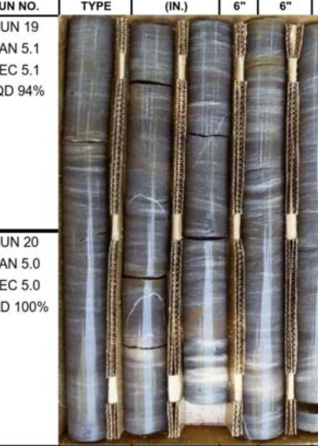

REMARKS: BORING LOCATED IN 8 FOOT CUT.

## amec foster wheeler — GEOTECHNICAL BRANCH, NASHVILLE, TENNESSEE — LOG OF BORING B-27, SHEET 1 OF 6

PROJECT: ALCOA HIGHWAY WIDENING (SR-115) RETAINING WALLS 7 AND 8 — DRILLER: TRI-STATE DRILLING
PROJECT NO.: 7681-15-002 — ON-SITE REP.: MH
BORING NO. / LOCATION: Sta 6+100, 16.9 m Left — DRY ON COMPLETION ?: YES, PRIOR TO CORING
DATE: 8-17-2015 TO 8-21-2015 — SURFACE ELEV. 972.3 FT. 296.4 M
REFUSAL: DEPTH 20.8 FT. 6.3 M ELEV. 951.5 FT. 290.0 M
SAMPLED: 20.8 FT. 6.3 M
TOP OF ROCK: DEPTH 20.8 FT. 6.3 M ELEV. 951.5 FT. 290.0 M
BEGAN CORING: DEPTH 20.8 FT. 6.3 M ELEV. 951.5 FT. 290.0 M
FOOTAGE CORED (LF): 89.1 FT. 27.2 M
BOTTOM OF HOLE DEPTH: 109.9 FT. 33.5 M ELEV. 862.4 FT. 262.9 M
WATER LEVEL DATA (IF APPLICABLE): COMPLETION: DEPTH FT. M, ELEV. FT. M; AFTER 24 HRS.: DEPTH FT. M, ELEV. FT. M; LDW AT: DEPTH 20.8 FT. 6.3 M, ELEV. 951.5 FT. 290.0 M
BORING ADVANCED BY: CORING POWER AUGERING X WASHBORING ____

Stratum depth scale (FT. – M.): 2.5 – 0.76, 5.0 – 1.52, 7.5 – 2.29, 10.0 – 3.05, 12.5 – 3.81, 15.0 – 4.57, 17.5 – 5.33, 20.0 – 6.10

| From FT. | From M. | To FT. | To M. | Sample or Run No. | Sample Type | Sple/Core Recov'd (in.) | 6" | 6" | 6" | N | Stratum Description |
|---|---|---|---|---|---|---|---|---|---|---|---|
| 0.0 | 0.00 | 1.0 | 0.30 | | A | | | | | | |
| 1.0 | 0.30 | 2.5 | 0.76 | S-1 | SS | 18 | 4 | 3 | 2 | 5 | Sand (F-M), clayey, silty, dark reddish-brown (Moist)(Loose) |
| 2.5 | 0.76 | 3.5 | 1.07 | | A | | | | | | |
| 3.5 | 1.07 | 5.0 | 1.52 | S-2 | SS | 18 | 3 | 2 | 3 | 5 | Clay, sandy, silty, dark reddish-brown to yellowish-brown (Moist)(Medium Stiff) |
| 5.0 | 1.52 | 6.0 | 1.83 | | A | | | | | | |
| 6.0 | 1.83 | 7.5 | 2.29 | S-3 | SS | 18 | 5 | 4 | 4 | 8 | Sand (F-M), clayey, silty, dark reddish-brown to yellowish-brown (Moist)(Loose) |
| 7.5 | 2.29 | 8.5 | 2.59 | | A | | | | | | |
| 8.5 | 2.59 | 10.0 | 3.05 | S-4 | SS | 18 | 6 | 6 | 7 | 13 | Sand (F-M), silty, reddish-brown (Moist)(Medium Dense) |
| 10.0 | 3.05 | 13.5 | 4.11 | | A | | | | | | |
| 13.5 | 4.11 | 15.0 | 4.57 | S-5 | SS | 18 | 4 | 4 | 4 | 8 | Sand (F-M), silty, dark brown to yellowish-brown (Moist)(Loose)(Decomposed Sandstone/ Siltstone) |
| 15.0 | 4.57 | 18.5 | 5.64 | | A | | | | | | |
| 18.5 | 5.64 | 20.0 | 6.10 | S-6 | SS | 18 | 2 | 1 | 1 | 2 | DO5 (Very Loose) |

REMARKS: Continued On Page 2. BORING LOCATED IN 8 FOOT CUT.

## amec foster wheeler — GEOTECHNICAL BRANCH, NASHVILLE, TENNESSEE — LOG OF BORING B-27, SHEET 3 OF 6

PROJECT: ALCOA HIGHWAY WIDENING (SR-115) RETAINING WALLS 7 AND 8 — DRILLER: TRI-STATE DRILLING
PROJECT NO.: 7681-15-002 — ON-SITE REP.: MH
BORING NO. / LOCATION: Sta 6+100, 16.9 m Left — DRY ON COMPLETION ?: YES, PRIOR TO CORING
DATE: 8-17-2015 TO 8-21-2015 — SURFACE ELEV. 972.3 FT. 296.4 M
REFUSAL: DEPTH 20.8 FT. 6.3 M ELEV. 951.5 FT. 290.0 M
SAMPLED: 20.8 FT. 6.3 M
TOP OF ROCK: DEPTH 20.8 FT. 6.3 M ELEV. 951.5 FT. 290.0 M
BEGAN CORING: DEPTH 20.8 FT. 6.3 M ELEV. 951.5 FT. 290.0 M
FOOTAGE CORED (LF): 89.1 FT. 27.2 M
BOTTOM OF HOLE DEPTH: 109.9 FT. 33.5 M ELEV. 862.4 FT. 262.9 M
WATER LEVEL DATA (IF APPLICABLE): COMPLETION: DEPTH FT. M, ELEV. FT. M; AFTER 24 HRS.: DEPTH FT. M, ELEV. FT. M; LDW AT: DEPTH 20.8 FT. 6.3 M, ELEV. 951.5 FT. 290.0 M
BORING ADVANCED BY: CORING POWER AUGERING X WASHBORING ____

Stratum depth scale (FT. – M.): 42.5 – 12.95, 45.0 – 13.72, 47.5 – 14.48, 50.0 – 15.24, 52.5 – 16.00, 55.0 – 16.76, 57.5 – 17.53, 60.0 – 18.29

| From FT. | From M. | To FT. | To M. | Sample or Run No. | Sample Type | Sple/Core Recov'd (in.) | 6" | 6" | 6" | N | Description |
|---|---|---|---|---|---|---|---|---|---|---|---|
| 39.9 | 12.16 | 44.7 | 13.62 | RUN 7 RAN 4.8 REC 4.8 RQD 66% | | | | | | | Sandstone, calcareous, gray to wea. reddish-brown with numerous open stained leached diagonal bedding planes 39.9 to 40.7, 41.0 to 41.6, and 44.4 to 44.9 |
| 44.7 | 13.62 | 49.6 | 15.12 | RUN 8 RAN 4.9 REC 4.3 RQD 53% | | | | | | | open cavity 45.9 to 46.2, Loss 0.3; 46.6 to 47.7 open, stained, leached diagonal bedding planes DIP 80° |
| 49.6 | 15.12 | 54.7 | 16.67 | RUN 9 RAN 5.1 REC 5.1 RQD 67% | | | | | | | 50.7 to 51.4 open stained leached, diagonal bedding planes; 52.6 to 53.4 open stained, fractured diagonal bedding planes |
| 54.7 | 16.67 | 59.7 | 18.20 | RUN 10 RAN 5.0 REC 5.0 RQD 80% | | | | | | | 54.7 to 55.2 open stained leached; 56.0 to 56.6 open stained diagonal bedding planes DIP 60° TO 70° |

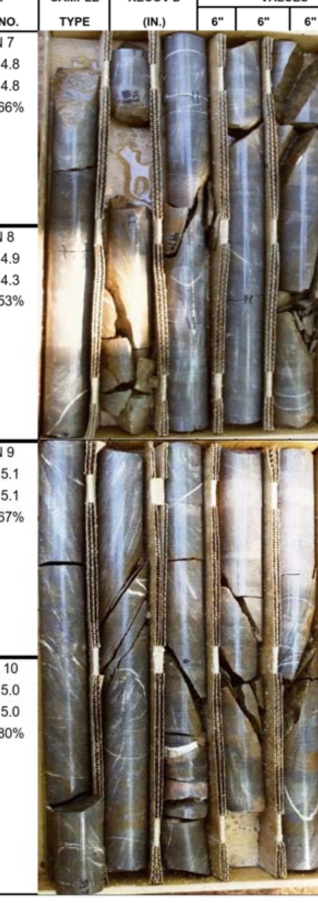

REMARKS: Continued On Page 4. BORING LOCATED IN 8 FOOT CUT.

## amec foster wheeler — GEOTECHNICAL BRANCH, NASHVILLE, TENNESSEE — LOG OF BORING B-27, SHEET 5 OF 6

PROJECT: ALCOA HIGHWAY WIDENING (SR-115) RETAINING WALLS 7 AND 8 — DRILLER: TRI-STATE DRILLING
PROJECT NO.: 7681-15-002 — ON-SITE REP.: MH
BORING NO. / LOCATION: Sta 6+100, 16.9 m Left — DRY ON COMPLETION ?: YES, PRIOR TO CORING
DATE: 8-17-2015 TO 8-21-2015 — SURFACE ELEV. 972.3 FT. 296.4 M
REFUSAL: DEPTH 20.8 FT. 6.3 M ELEV. 951.5 FT. 290.0 M
SAMPLED: 20.8 FT. 6.3 M
TOP OF ROCK: DEPTH 20.8 FT. 6.3 M ELEV. 951.5 FT. 290.0 M
BEGAN CORING: DEPTH 20.8 FT. 6.3 M ELEV. 951.5 FT. 290.0 M
FOOTAGE CORED (LF): 89.1 FT. 27.2 M
BOTTOM OF HOLE DEPTH: 109.9 FT. 33.5 M ELEV. 862.4 FT. 262.9 M
WATER LEVEL DATA (IF APPLICABLE): COMPLETION: DEPTH FT. M, ELEV. FT. M; AFTER 24 HRS.: DEPTH FT. M, ELEV. FT. M; LDW AT: DEPTH 20.8 FT. 6.3 M, ELEV. 951.5 FT. 290.0 M
BORING ADVANCED BY: CORING POWER AUGERING X WASHBORING ____

Stratum depth scale (FT. – M.): 82.5 – 25.15, 85.0 – 25.91, 87.5 – 26.67, 90.0 – 27.43, 92.5 – 28.19, 95.0 – 28.96, 97.5 – 29.72, 100.0 – 30.48

| From FT. | From M. | To FT. | To M. | Sample or Run No. | Sample Type | Sple/Core Recov'd (in.) | 6" | 6" | 6" | N | Description |
|---|---|---|---|---|---|---|---|---|---|---|---|
| 79.7 | 24.29 | 84.8 | 25.85 | RUN 15 RAN 5.0 REC 4.9 RQD 98% | | | | | | | Sandstone, calcareous, mottled gray with open stained bedding planes |
| 84.8 | 25.85 | 89.8 | 27.37 | RUN 16 RAN 5.0 REC 5.0 RQD 94% | | | | | | | |
| 89.8 | 27.37 | 94.8 | 28.90 | RUN 17 RAN 5.0 REC 5.0 RQD 98% | | | | | | | --- open stained, leached bedding planes and diagonal fracture |
| 94.8 | 28.9 | 99.8 | 30.42 | RUN 18 RAN 5.0 REC 4.7 RQD 60% | | | | | | | 97.2 to 98.1 stained, leached weathered with open cavity, Loss 0.3' |

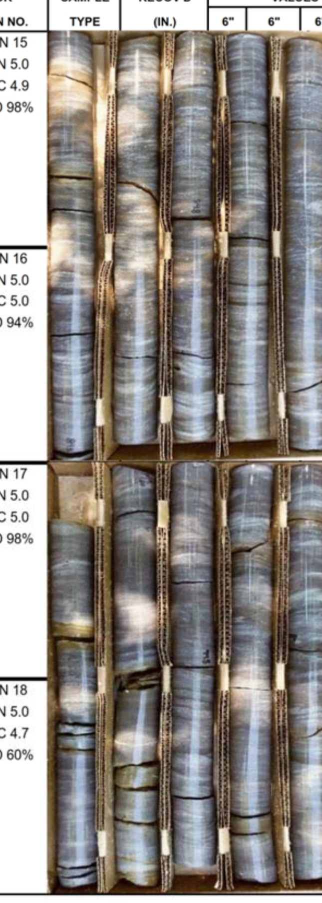

REMARKS: Continue On Page 6. BORING LOCATED IN 8 FOOT CUT.

## amec foster wheeler — GEOTECHNICAL BRANCH, NASHVILLE, TENNESSEE — LOG OF BORING B-28, SHEET 1 OF 1

PROJECT: ALCOA HIGHWAY WIDENING (SR-115) RETAINING WALLS 7 AND 8 — DRILLER: TRI-STATE DRILLING
PROJECT NO.: 7681-15-002 — ON-SITE REP.: WDS
BORING NO. / LOCATION: STA 6+115, 20.5 m Left — DRY ON COMPLETION ?: YES
DATE: August 5, 2015 — SURFACE ELEV. 979.2 FT. 298.5 M
REFUSAL: DEPTH 16.0 FT. 4.9 M ELEV. 963.2 FT. 293.6 M
SAMPLED: NA FT. M
TOP OF ROCK: DEPTH NA FT. M ELEV. FT. M
BEGAN CORING: DEPTH NA FT. M ELEV. FT. M
FOOTAGE CORED (LF): 0.0 FT. 0.0 M
BOTTOM OF HOLE DEPTH: 16.0 FT. 4.9 M ELEV. 963.2 FT. 293.6 M
WATER LEVEL DATA (IF APPLICABLE): COMPLETION: DEPTH FT. M, ELEV. FT. M; AFTER 24 HRS.: DEPTH FT. M, ELEV. FT. M; LDW AT: DEPTH FT. M, ELEV. FT. M
BORING ADVANCED BY: ____ POWER AUGERING X WASHBORING ____

Stratum depth scale (FT. – M.): 2.5 – 0.76, 5.0 – 1.52, 7.5 – 2.29, 10.0 – 3.05, 12.5 – 3.81, 15.0 – 4.57, 17.5 – 5.33, 20.0 – 6.10

| From FT. | From M. | To FT. | To M. | Sample or Run No. | Sample Type | Sple/Core Recov'd (in.) | 6" | 6" | 6" | N | Stratum Description |
|---|---|---|---|---|---|---|---|---|---|---|---|
| 0.0 | 0.00 | 16.0 | 4.88 | | A | | | | | | Clay, very sandy, silty, reddish-brown (Some Rock Scraping @ 13.5') |
| | | | | | | | | | | | AUGER REFUSAL @ 16.0' DRY ON COMPLETION |

REMARKS: 8 FOOT SIDE HILL CUT

CONTRACTOR NOTES:

1. THE GEOTECHNICAL REPORT WHICH INCLUDES DETAILED BORING RECORDS, SOIL AND ROCK TESTING DATA IS AVAILABLE UPON REQUEST. ROCK CORE SAMPLES ARE AVAILABLE FOR INSPECTION BY THE CONTRACTOR.
2. IT IS THE RESPONSIBILITY OF THE CONTRACTOR TO REVIEW THE PLANS, GEOTECHNICAL REPORT, AND BORING LOGS TO BECOME FAMILIAR WITH THE SUBSURFACE CONDITIONS PERTINENT TO THE ASSOCIATED WORK TO BE CONDUCTED BY THE CONTRACTOR. THE CONTRACTOR SHOULD ALSO CONSIDER THEIR EXPERIENCE IN THE PROJECT'S GEOLOGIC AND SUBSURFACE SETTING AND THEIR EXPERIENCE IN DEALING WITH VARIABLE SUBSURFACE CONDITIONS ACROSS A PROJECT SITE TO BASE THEIR BID UPON AND DECISIONS REGARDING APPROPRIATE EQUIPMENT TO BE UTILIZED.

# PRELIMINARY PLANS

SEALED BY

TENNESSEE METRIC D.O.T.

COORDINATES ARE NAD/83(1995), ARE DATUM ADJUSTED BY THE FACTOR OF 1.000 AND TIED TO THE TGRN. ALL ELEVATIONS ARE REFERENCED TO THE NAVD 1988.

STATE OF TENNESSEE
DEPARTMENT OF TRANSPORTATION

# SOIL BORING LOGS RETAINING WALLS NO. 7 AND 8

SCALE: AS NOTED

| TYPE | YEAR | PROJECT NO. | SHEET NO. |
|---|---|---|---|
| CONST. | 2015 | 47026-3279-14 | ---- |

amec foster wheeler — GEOTECHNICAL BRANCH, NASHVILLE, TENNESSEE

LOG OF BORING B-29, SHEET 1 OF 2

PROJECT: ALCOA HIGHWAY WIDENING (SR-115) RETAINING WALLS 7 AND 8 — DRILLER: TRI-STATE DRILLING
PROJECT NO.: 7681-15-002 — ON-SITE REP.: MH
BORING NO. / LOCATION: Sta 6+130, 21.0 m Left — DRY ON COMPLETION ?: YES, PRIOR TO CORING
DATE: August 22, 2015 — SURFACE ELEV.: 972.6 FT. 296.4 M
REFUSAL: DEPTH 22.6 FT. 6.9 M — ELEV. 950.0 FT. 289.6 M
SAMPLED 22.6 FT. 6.9 M
TOP OF ROCK: DEPTH 22.6 FT. 6.9 M — ELEV. 950.0 FT. 289.6 M
BEGAN CORING: DEPTH 22.6 FT. 6.9 M — ELEV. 950.0 FT. 289.6 M
FOOTAGE CORED (LF): 13.1 FT. 4.0 M
BOTTOM OF HOLE: DEPTH 35.7 FT. 10.9 M — ELEV. 936.9 FT. 285.6 M
BORING ADVANCED BY: CORE — POWER AUGERING: X — WASHBORING:

WATER LEVEL DATA (IF APPLICABLE)
COMPLETION: DEPTH FT. M — ELEV. FT. M
AFTER 24 HRS.: DEPTH FT. M — ELEV. FT. M
LDW AT: DEPTH FT. M — ELEV. FT. M

| STRATUM DEPTH FT. | STRATUM DEPTH M. | SAMPLE DEPTH FROM FT. | SAMPLE DEPTH FROM M. | SAMPLE DEPTH TO FT. | SAMPLE DEPTH TO M. | SAMPLE OR RUN NO. | SAMPLE TYPE | SPLE/CORE RECOV'D (IN.) | SPT VALUES 6" | 6" | 6" | N | STRATUM DESCRIPTION |
|---|---|---|---|---|---|---|---|---|---|---|---|---|---|
| | | 0.0 | 0.00 | 1.0 | 0.30 | | A | | | | | | |
| 2.5 | 0.76 | 1.0 | 0.30 | 2.5 | 0.76 | S-1 | SS | 14 | 2 | 3 | 4 | 7 | Sand (F-M), silty, reddish-brown (Moist);Loose) |
| | | 2.5 | 0.76 | 3.5 | 1.07 | | A | | | | | | |
| 5.0 | 1.52 | 3.5 | 1.07 | 5.0 | 1.52 | S-2 | SS | 18 | 5 | 6 | 6 | 12 | DO1, (Medium Dense) |
| | | 5.0 | 1.52 | 6.0 | 1.83 | | A | | | | | | |
| 7.5 | 2.29 | 6.0 | 1.83 | 7.5 | 2.29 | S-3 | SS | 18 | 3 | 3 | 5 | 8 | DO1, (Loose) |
| | | 7.5 | 2.29 | 8.5 | 2.59 | | A | | | | | | |
| 10.0 | 3.05 | 8.5 | 2.59 | 10.0 | 3.05 | S-4 | SS | 18 | 3 | 5 | 6 | 11 | Silt, sandy, yellowish-brown (Moist);(Stiff) |
| | | | | | | | A | | | | | | |
| 12.5 | 3.81 | | | | | | | | | | | | |
| | | 13.5 | 4.11 | 13.5 | 4.11 | | | | | | | | |
| 15.0 | 4.57 | 15.0 | 4.57 | 15.0 | 4.57 | S-5 | SS | 18 | 1 | 1 | 1 | 2 | Sand (F-M), silty, dark brown (Moist);(Very Loose) |
| | | | | | | | A | | | | | | |
| 17.5 | 5.33 | | | | | | | | | | | | |
| | | 18.5 | 5.64 | 18.5 | 5.64 | | | | | | | | |
| 20.0 | 6.10 | | | 20.0 | 6.10 | S-6 | SS | 13 | 0 | 0 | 1 | 1 | DO5 |

REMARKS: Continued On Page 2.
BORING IN 8 FOOT CUT

amec foster wheeler — GEOTECHNICAL BRANCH, NASHVILLE, TENNESSEE

LOG OF BORING B-30, SHEET 1 OF 2

PROJECT: ALCOA HIGHWAY WIDENING (SR-115) RETAINING WALLS 7 AND 8 — DRILLER: TRI-STATE DRILLING
PROJECT NO.: 7681-15-002 — ON-SITE REP.: WDS
BORING NO. / LOCATION: STA 6+145, 20.5 m Left — DRY ON COMPLETION ?: YES
DATE: August 5, 2015 — SURFACE ELEV.: 968.7 FT. 295.3 M
REFUSAL: DEPTH 35.0 FT. 10.7 M — ELEV. 933.7 FT. 284.6 M
SAMPLED NA FT. M
TOP OF ROCK: DEPTH NA FT. M — ELEV. FT. M
BEGAN CORING: DEPTH NA FT. M — ELEV. FT. M
FOOTAGE CORED (LF): 0.0 FT. 0.0 M
BOTTOM OF HOLE: DEPTH 35.0 FT. 10.7 M — ELEV. 933.7 FT. 284.6 M
BORING ADVANCED BY: — POWER AUGERING: X — WASHBORING:

WATER LEVEL DATA (IF APPLICABLE)
COMPLETION: DEPTH FT. M — ELEV. FT. M
AFTER 24 HRS.: DEPTH FT. M — ELEV. FT. M
LDW AT: DEPTH FT. M — ELEV. FT. M

| STRATUM DEPTH FT. | STRATUM DEPTH M. | SAMPLE DEPTH FROM FT. | SAMPLE DEPTH FROM M. | SAMPLE DEPTH TO FT. | SAMPLE DEPTH TO M. | SAMPLE OR RUN NO. | SAMPLE TYPE | SPLE/CORE RECOV'D (IN.) | SPT VALUES 6" | 6" | 6" | N | STRATUM DESCRIPTION |
|---|---|---|---|---|---|---|---|---|---|---|---|---|---|
| | | 0.0 | 0.00 | | | | | | | | | | |
| 2.5 | 0.76 | | | | | | | | | | | | |
| 5.0 | 1.52 | | | | | | A | | | | | | Clay, very sandy, silty, reddish-brown (Moist) |
| 7.5 | 2.29 | | | | | | | | | | | | |
| 10.0 | 3.05 | | | | | | | | | | | | |
| 12.5 | 3.81 | 12.0 | 3.66 | 12.0 | 3.66 | | | | | | | | |
| 15.0 | 4.57 | | | | | | A | | | | | | Sand, silty, clayey, reddish-brown (Moist) |
| 17.5 | 5.33 | | | | | | | | | | | | |
| 20.0 | 6.10 | | | 20.0 | 6.10 | | | | | | | | |

REMARKS: 6 FOOT SIDE HILL CUT
Continued On Page 2.

amec foster wheeler — GEOTECHNICAL BRANCH, NASHVILLE, TENNESSEE

LOG OF BORING B-31, SHEET 1 OF 4

PROJECT: ALCOA HIGHWAY WIDENING (SR-115) RETAINING WALLS 7 AND 8 — DRILLER: TRI-STATE DRILLING
PROJECT NO.: 7681-15-002 — ON-SITE REP.: WDS
BORING NO. / LOCATION: STA 6+160, 20.5 m Left — DRY ON COMPLETION ?: YES, PRIOR TO CORING
DATE: August 7-11, 2015 — SURFACE ELEV.: 963.3 FT. 293.6 M
REFUSAL: DEPTH 21.2 FT. 6.5 M — ELEV. 942.1 FT. 287.2 M
SAMPLED 21.2 FT. 6.5 M
TOP OF ROCK: DEPTH 21.2 FT. 6.5 M — ELEV. 942.1 FT. 287.2 M
BEGAN CORING: DEPTH 21.2 FT. 6.5 M — ELEV. 942.1 FT. 287.2 M
FOOTAGE CORED (LF): 47.3 FT. 14.4 M
BOTTOM OF HOLE: DEPTH 68.5 FT. 20.9 M — ELEV. 894.8 FT. 272.7 M
BORING ADVANCED BY: CORING — POWER AUGERING: X — WASHBORING:

WATER LEVEL DATA (IF APPLICABLE)
COMPLETION: DEPTH FT. M — ELEV. FT. M
AFTER 24 HRS.: DEPTH FT. M — ELEV. FT. M
LDW AT: DEPTH 44.0 FT. 13.4 M — ELEV. 919.3 FT. 280.2 M

| STRATUM DEPTH FT. | STRATUM DEPTH M. | SAMPLE DEPTH FROM FT. | SAMPLE DEPTH FROM M. | SAMPLE DEPTH TO FT. | SAMPLE DEPTH TO M. | SAMPLE OR RUN NO. | SAMPLE TYPE | SPLE/CORE RECOV'D (IN.) | SPT VALUES 6" | 6" | 6" | N | STRATUM DESCRIPTION |
|---|---|---|---|---|---|---|---|---|---|---|---|---|---|
| | | 0.0 | 0.00 | 1.0 | 0.30 | | A | | | | | | |
| 2.5 | 0.76 | 1.0 | 0.30 | 2.5 | 0.76 | S-1 | SS | 14 | 3 | 3 | 3 | 8 | Clay, very sandy, silty, reddish-brown (Moist)(Medium Stiff) |
| | | 2.5 | 0.76 | 3.5 | 1.07 | | A | | | | | | |
| 5.0 | 1.52 | 3.5 | 1.07 | 5.0 | 1.52 | S-2 | SS | 14 | 2 | 3 | 4 | 7 | DO1, mottled yellowish-brown |
| | | 5.0 | 1.52 | 6.0 | 1.83 | | A | | | | | | |
| 7.5 | 2.29 | 6.0 | 1.83 | 7.5 | 2.29 | S-3 | SS | 14 | 4 | 4 | 6 | 10 | DO1, (stiff) |
| | | 7.5 | 2.29 | 8.5 | 2.59 | | A | | | | | | |
| 10.0 | 3.05 | 8.5 | 2.59 | 10.0 | 3.05 | S-4 | SS | 14 | 2 | 5 | 7 | 12 | DO3 |
| | | | | | | | A | | | | | | |
| 12.5 | 3.81 | | | | | | | | | | | | |
| | | 13.5 | 4.11 | 13.5 | 4.11 | | | | | | | | |
| 15.0 | 4.57 | 15.0 | 4.57 | 15.0 | 4.57 | S-5 | SS | 14 | 3 | 4 | 6 | 10 | Sand (F-M), silty, slightly clayey, reddish-brown ;yellowish-brown (Moist);(Loose) (Decomposed Sandstone/ Siltstone) |
| | | | | | | | A | | | | | | |
| 17.5 | 5.33 | | | | | | | | | | | | |
| | | 18.5 | 5.64 | 18.5 | 5.64 | | | | | | | | |
| 20.0 | 6.10 | | | 20.0 | 6.10 | S-6 | SS | 16 | 3 | 3 | 2 | 5 | DO5, (very loose) |

REMARKS: BORING IN 10 FOOT SIDE HILL CUT
Continued On Page 2.

amec foster wheeler — GEOTECHNICAL BRANCH, NASHVILLE, TENNESSEE

LOG OF BORING B-31, SHEET 3 OF 4

PROJECT: ALCOA HIGHWAY WIDENING (SR-115) RETAINING WALLS 7 AND 8 — DRILLER: TRI-STATE DRILLING
PROJECT NO.: 7681-15-002 — ON-SITE REP.: WDS
BORING NO. / LOCATION: STA 6+160, 20.5 m Left — DRY ON COMPLETION ?: YES, PRIOR TO CORING
DATE: August 7-11, 2015 — SURFACE ELEV.: 963.3 FT. 293.6 M
REFUSAL: DEPTH 21.2 FT. 6.5 M — ELEV. 942.1 FT. 287.2 M
SAMPLED 21.2 FT. 6.5 M
TOP OF ROCK: DEPTH 21.2 FT. 6.5 M — ELEV. 942.1 FT. 287.2 M
BEGAN CORING: DEPTH 21.2 FT. 6.5 M — ELEV. 942.1 FT. 287.2 M
FOOTAGE CORED (LF): 47.3 FT. 14.4 M
BOTTOM OF HOLE: DEPTH 68.5 FT. 20.9 M — ELEV. 894.8 FT. 272.7 M
BORING ADVANCED BY: CORING — POWER AUGERING: X — WASHBORING:

WATER LEVEL DATA (IF APPLICABLE)
COMPLETION: DEPTH FT. M — ELEV. FT. M
AFTER 24 HRS.: DEPTH 44.0 FT. 13.4 M — ELEV. 919.3 FT. 280.2 M

| STRATUM DEPTH FT. | STRATUM DEPTH M. | SAMPLE DEPTH FROM FT. | SAMPLE DEPTH FROM M. | SAMPLE DEPTH TO FT. | SAMPLE DEPTH TO M. | SAMPLE OR RUN NO. | SAMPLE TYPE | SPLE/CORE RECOV'D (IN.) | "SPT" VALUES 6" | 6" | 6" | N | DESCRIPTION |
|---|---|---|---|---|---|---|---|---|---|---|---|---|---|
| | | 40.0 | 12.19 | | | RUN 5 RAN 5.0 REC 5.0 RQD 38% | | | | | | | |
| 42.5 | 12.95 | | | | | | | | | | | | DO R3 |
| | | | | | | | | | | | | | 40.8 to 41.6; 42.4 to 44.3; and partially healed vertical fractures 44.3 to 44.7 DIP 10° TO 15° 100% DWL @ 44.0 |
| 45.0 | 13.72 | | | 45.0 | 13.72 | | | | | | | | |
| | | 45.0 | 13.72 | | | RUN 6 RAN 3.1 REC 3.0 RQD 0% | | | | | | | |
| 47.5 | 14.48 | | | | | | | | | | | | ---variably weathered with open stained vertical fractures |
| | | | | 48.1 | 14.66 | | | | | | | | |
| | | 48.1 | 14.66 | | | RUN 7 RAN 1.9 REC 1.8 RQD 68% | | | | | | | |
| | | | | 48.9 | 14.90 | | | | | | | | --- weathered with open stained $q_u$=146.8 MPa, $\gamma$=26.58 kN/m$^3$ diagonal fractures 48.1 to 48.4 DIP 10° TO 15° |
| 50.0 | 15.24 | | | 50.0 | 15.24 | | | | | | | | |
| | | 50.0 | 15.24 | | | RUN 8 RAN 5.0 REC 5.0 RQD 72% | | | | | | | |
| 52.5 | 16.00 | | | | | | | | | | | | ---with open, stained leached high angle (70° to 80°) diagonal fractures 52.5 to 53.7; and healed vertical fractures 53.7 to 55.0 |
| 55.0 | 16.76 | | | 55.0 | 16.76 | | | | | | | | |
| | | 55.0 | 16.76 | | | RUN 9 RAN 5.0 REC 4.9 RQD 10% | | | | | | | |
| 57.5 | 17.53 | | | | | | | | | | | | --- variablly stained, leached, weathered with high angle diagonal fractures (70° to 80°) |
| 60.0 | 18.29 | | | 60.0 | 18.29 | | | | | | | | |

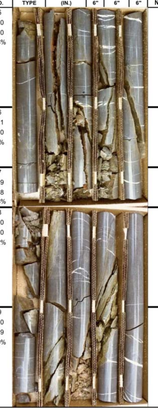

REMARKS: BORING IN 10 FOOT SIDE HILL CUT
Continued On Page 4.

amec foster wheeler — GEOTECHNICAL BRANCH, NASHVILLE, TENNESSEE

LOG OF BORING B-29, SHEET 2 OF 2

PROJECT: ALCOA HIGHWAY WIDENING (SR-115) RETAINING WALLS 7 AND 8 — DRILLER: TRI-STATE DRILLING
PROJECT NO.: 7681-15-002 — ON-SITE REP.: MH
BORING NO. / LOCATION: Sta 6+130, 21.0 m Left — DRY ON COMPLETION ?: YES, PRIOR TO CORING
DATE: August 22, 2015 — SURFACE ELEV.: 972.6 FT. 296.4 M
REFUSAL: DEPTH 22.6 FT. 6.9 M — ELEV. 950.0 FT. 289.6 M
SAMPLED 22.6 FT. 6.9 M
TOP OF ROCK: DEPTH 22.6 FT. 6.9 M — ELEV. 950.0 FT. 289.6 M
BEGAN CORING: DEPTH 22.6 FT. 6.9 M — ELEV. 950.0 FT. 289.6 M
FOOTAGE CORED (LF): 13.1 FT. 4.0 M
BOTTOM OF HOLE: DEPTH 35.7 FT. 10.9 M — ELEV. 936.9 FT. 285.6 M
BORING ADVANCED BY: CORE — POWER AUGERING: X — WASHBORING:

WATER LEVEL DATA (IF APPLICABLE)
COMPLETION: DEPTH FT. M — ELEV. FT. M
AFTER 24 HRS.: DEPTH FT. M — ELEV. FT. M
LDW AT: DEPTH FT. M — ELEV. FT. M

| STRATUM DEPTH FT. | STRATUM DEPTH M. | SAMPLE DEPTH FROM FT. | SAMPLE DEPTH FROM M. | SAMPLE DEPTH TO FT. | SAMPLE DEPTH TO M. | SAMPLE OR RUN NO. | SAMPLE TYPE | SPLE/CORE RECOV'D (IN.) | "SPT" VALUES 6" | 6" | 6" | N | DESCRIPTION |
|---|---|---|---|---|---|---|---|---|---|---|---|---|---|
| | | 20.0 | 6.10 | | | | A | | | | | | Same As Above |
| 22.5 | 6.86 | | | 22.6 | 6.89 | | | | | | | | AUGER REFUSAL @ 22.6', DRY PRIOR TO CORING |
| | | 22.6 | 6.889 | | | RUN 1 RAN 3.1 REC 2.9 RQD 65% | | | | | | | BEGIN NQ CORING @ 22.6', 100% DWR |
| 25.0 | 7.62 | | | | | | | | | | | | Sandstone, calcareous, gray to wea. reddish-brown 22.6' to 23.1' stained, leached, weathered; 25.3 to 25.7 open, stained, leached, partial cavity |
| | | 25.7 | 7.833 | 25.7 | 7.83 | | | | | | | | |
| 27.5 | 8.38 | | | | | RUN 2 RAN 5.0 REC 5.0 RQD 96% | | | | | | | --- with open, stained diagonal fracture |
| 30.0 | 9.14 | | | 30.7 | 9.36 | | | | | | | | Flange @ 30.7' |
| | | 30.7 | 9.357 | | | RUN 3 RAN 5.0 REC 4.8 RQD 82% | | | | | | | |
| 32.5 | 9.91 | | | | | | | | | | | | 31.2' to 31.7' open stained diagonal fracutres |
| 35.0 | 10.67 | | | 35.7 | 10.88 | | | | | | | | |
| 37.5 | 11.43 | | | | | | | | | | | | BORING TERMINATED @ 35.7' 100% DWR |
| 40.0 | 12.19 | | | | | | | | | | | | |

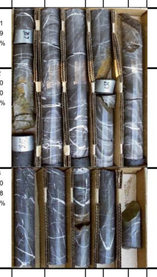

REMARKS:
BORING IN 8 FOOT CUT

amec foster wheeler — GEOTECHNICAL BRANCH, NASHVILLE, TENNESSEE

LOG OF BORING B-30, SHEET 2 OF 2

PROJECT: ALCOA HIGHWAY WIDENING (SR-115) RETAINING WALLS 7 AND 8 — DRILLER: TRI-STATE DRILLING
PROJECT NO.: 7681-15-002 — ON-SITE REP.: WDS
BORING NO. / LOCATION: STA 6+145, 20.5 m Left — DRY ON COMPLETION ?: YES
DATE: August 5, 2015 — SURFACE ELEV.: 968.7 FT. 295.3 M
REFUSAL: DEPTH 35.0 FT. 10.7 M — ELEV. 933.7 FT. 284.6 M
SAMPLED NA FT. M
TOP OF ROCK: DEPTH NA FT. M — ELEV. FT. M
BEGAN CORING: DEPTH NA FT. M — ELEV. FT. M
FOOTAGE CORED (LF): 0.0 FT. 0.0 M
BOTTOM OF HOLE: DEPTH 35.0 FT. 10.7 M — ELEV. 933.7 FT. 284.6 M
BORING ADVANCED BY: — POWER AUGERING: X — WASHBORING:

WATER LEVEL DATA (IF APPLICABLE)
COMPLETION: DEPTH FT. M — ELEV. FT. M
AFTER 24 HRS.: DEPTH FT. M — ELEV. FT. M
LDW AT: DEPTH FT. M — ELEV. FT. M

| STRATUM DEPTH FT. | STRATUM DEPTH M. | SAMPLE DEPTH FROM FT. | SAMPLE DEPTH FROM M. | SAMPLE DEPTH TO FT. | SAMPLE DEPTH TO M. | SAMPLE OR RUN NO. | SAMPLE TYPE | SPLE/CORE RECOV'D (IN.) | "SPT" VALUES 6" | 6" | 6" | N | DESCRIPTION |
|---|---|---|---|---|---|---|---|---|---|---|---|---|---|
| | | 20.0 | 6.10 | | | | | | | | | | |
| 22.5 | 6.86 | | | | | | | | | | | | |
| 25.0 | 7.62 | | | | | | A | | | | | | Sand (F-M), slightly silty, brown (moist);(Loose) |
| 27.5 | 8.38 | | | | | | | | | | | | |
| 30.0 | 9.14 | | | | | | | | | | | | |
| 32.5 | 9.91 | | | | | | | | | | | | |
| | | | | 35.0 | 10.67 | | | | | | | | |
| 35.0 | 10.67 | | | | | | | | | | | | |
| 37.5 | 11.43 | | | | | | | | | | | | AUGER REFUSAL @ 35.0' DRY ON COMPLETION |
| 40.0 | 12.19 | | | | | | | | | | | | |

REMARKS: 6 FOOT SIDE HILL CUT

amec foster wheeler — GEOTECHNICAL BRANCH, NASHVILLE, TENNESSEE

LOG OF BORING B-31, SHEET 2 OF 4

PROJECT: ALCOA HIGHWAY WIDENING (SR-115) RETAINING WALLS 7 AND 8 — DRILLER: TRI-STATE DRILLING
PROJECT NO.: 7681-15-002 — ON-SITE REP.: WDS
BORING NO. / LOCATION: STA 6+160, 20.5 m Left — DRY ON COMPLETION ?: YES, PRIOR TO CORING
DATE: August 7-11, 2015 — SURFACE ELEV.: 963.3 FT. 293.6 M
REFUSAL: DEPTH 21.2 FT. 6.5 M — ELEV. 942.1 FT. 287.2 M
SAMPLED 21.2 FT. 6.5 M
TOP OF ROCK: DEPTH 21.2 FT. 6.5 M — ELEV. 942.1 FT. 287.2 M
BEGAN CORING: DEPTH 21.2 FT. 6.5 M — ELEV. 942.1 FT. 287.2 M
FOOTAGE CORED (LF): 47.3 FT. 14.4 M
BOTTOM OF HOLE: DEPTH 68.5 FT. 20.9 M — ELEV. 894.8 FT. 272.7 M
BORING ADVANCED BY: CORING — POWER AUGERING: X — WASHBORING:

WATER LEVEL DATA (IF APPLICABLE)
COMPLETION: DEPTH FT. M — ELEV. FT. M
AFTER 24 HRS.: DEPTH FT. M — ELEV. FT. M
LDW AT: DEPTH 44.0 FT. 13.4 M — ELEV. 919.3 FT. 280.2 M

| STRATUM DEPTH FT. | STRATUM DEPTH M. | SAMPLE DEPTH FROM FT. | SAMPLE DEPTH FROM M. | SAMPLE DEPTH TO FT. | SAMPLE DEPTH TO M. | SAMPLE OR RUN NO. | SAMPLE TYPE | SPLE/CORE RECOV'D (IN.) | "SPT" VALUES 6" | 6" | 6" | N | DESCRIPTION |
|---|---|---|---|---|---|---|---|---|---|---|---|---|---|
| | | 20.0 | 6.10 | | | | | | | | | | Auger Refusal @ 21.2', Dry On Completion |
| | | 21.2 | | 21.2 | 6.46 | RUN 1 RAN 3.8 REC 3.4 RQD 42% | | | | | | | Begin NQ Coring @ 21.2', 100% DWR |
| 22.5 | 6.86 | | | | | | | | | | | | |
| | | | | 25.0 | 7.62 | | | | | | | | Sandstone, calcareous, gray to wea. reddish-brown high angle fractures (70° to 80°), variably stained, leached 21.2 to 21.7; 22.7 to 23.7; Loss 22.4 to 22.7 DIP 5° TO 10° |
| 25.0 | 7.62 | 25.0 | 7.62 | | | RUN 2 RAN 5.0 REC 4.8 RQD 84% | | | | | | | |
| 27.5 | 8.38 | | | | | | | | | | | | ---siliceous, open stained horizontal fracture, and open stained diagonal fractures vertical fractures 29.4 to 29.8 $q_u$=161.2 MPa, $\gamma$=26.62 kN/m$^3$ |
| | | | | 28.1 | 8.56 | | | | | | | | |
| | | | | 30.0 | 9.14 | | | | | | | | |
| 30.0 | 9.14 | 30.0 | 9.144 | | | RUN 3 RAN 5.0 REC 5.1 RQD 40% | | | | | | | --- to weathered reddish-brown with open stained diagonal fractures, diagonal bedding planes, variably fractured (70° to 80°) DIP 5° TO 10° |
| 32.5 | 9.91 | | | | | | | | | | | | |
| | | | | 35.0 | 10.67 | | | | | | | | |
| 35.0 | 10.67 | 35.0 | 10.67 | | | RUN 4 RAN 5.0 REC 5.0 RQD 100% | | | | | | | |
| 37.5 | 11.43 | | | | | | | | | | | | --- HORIZONTAL BEDDING |
| | | | | 40.0 | 12.19 | | | | | | | | |
| 40.0 | 12.19 | | | | | | | | | | | | |

REMARKS: BORING IN 10 FOOT SIDE HILL CUT
Continued On Page 3.

amec foster wheeler — GEOTECHNICAL BRANCH, NASHVILLE, TENNESSEE

LOG OF BORING B-31, SHEET 4 OF 4

PROJECT: ALCOA HIGHWAY WIDENING (SR-115) RETAINING WALLS 7 AND 8 — DRILLER: TRI-STATE DRILLING
PROJECT NO.: 7681-15-002 — ON-SITE REP.: WDS
BORING NO. / LOCATION: STA 6+160, 20.5 m Left — DRY ON COMPLETION ?: YES, PRIOR TO CORING
DATE: August 7-11, 2015 — SURFACE ELEV.: 963.3 FT. 293.6 M
REFUSAL: DEPTH 21.2 FT. 6.5 M — ELEV. 942.1 FT. 287.2 M
SAMPLED 21.2 FT. 6.5 M
TOP OF ROCK: DEPTH 21.2 FT. 6.5 M — ELEV. 942.1 FT. 287.2 M
BEGAN CORING: DEPTH 21.2 FT. 6.5 M — ELEV. 942.1 FT. 287.2 M
FOOTAGE CORED (LF): 47.3 FT. 14.4 M
BOTTOM OF HOLE: DEPTH 68.5 FT. 20.9 M — ELEV. 894.8 FT. 272.7 M
BORING ADVANCED BY: CORING — POWER AUGERING: X — WASHBORING:

WATER LEVEL DATA (IF APPLICABLE)
COMPLETION: DEPTH FT. M — ELEV. FT. M
AFTER 24 HRS.: DEPTH FT. M — ELEV. FT. M
LDW AT: DEPTH 44.0 FT. 13.4 M — ELEV. 919.3 FT. 280.2 M

| STRATUM DEPTH FT. | STRATUM DEPTH M. | SAMPLE DEPTH FROM FT. | SAMPLE DEPTH FROM M. | SAMPLE DEPTH TO FT. | SAMPLE DEPTH TO M. | SAMPLE OR RUN NO. | SAMPLE TYPE | SPLE/CORE RECOV'D (IN.) | "SPT" VALUES 6" | 6" | 6" | N | DESCRIPTION |
|---|---|---|---|---|---|---|---|---|---|---|---|---|---|
| | | 60.0 | 18.29 | | | RUN 10 RAN 5.0 REC 5.0 RQD 78% | | | | | | | |
| 62.5 | 19.05 | | | | | | | | | | | | --- with open diagonal fractures; partially healed vertical fractures 64.0 to 64.2 and 64.2 to 64.7 |
| 65.0 | 19.81 | | | 65.0 | 19.81 | | | | | | | | |
| | | 65.0 | 19.81 | | | RUN 11 RAN 3.5 REC 3.5 RQD 26% | | | | | | | |
| 67.5 | 20.57 | | | | | | | | | | | | --- with open stained diagonal fractures (70° to 80°) 65.0 to 66.5 and open stained diagonal fractures with partial core; partially healed vertical fractures and vertical fractures 66.6 to 68.5 |
| | | | | 68.5 | 20.88 | | | | | | | | |
| 70.0 | 21.33 | | | | | | | | | | | | BORING TERMINATED @ 68.5' 100% DWL |
| 72.5 | 22.10 | | | | | | | | | | | | |
| 75.0 | 22.86 | | | | | | | | | | | | |
| 77.5 | 23.62 | | | | | | | | | | | | |
| 80.0 | 24.38 | | | | | | | | | | | | |

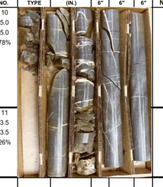

REMARKS: BORING IN 10 FOOT SIDE HILL CUT

CONTRACTOR NOTES:

1. THE GEOTECHNICAL REPORT WHICH INCLUDES DETAILED BORING RECORDS, SOIL AND ROCK TESTING DATA IS AVAILABLE UPON REQUEST. ROCK CORE SAMPLES ARE AVAILABLE FOR INSPECTION BY THE CONTRACTOR.

2. IT IS THE RESPONSIBILITY OF THE CONTRACTOR TO REVIEW THE PLANS, GEOTECHNICAL REPORT, AND BORING LOGS TO BECOME FAMILIAR WITH THE SUBSURFACE CONDITIONS PERTINENT TO THE ASSOCIATED WORK TO BE CONDUCTED BY THE CONTRACTOR. THE CONTRACTOR SHOULD ALSO CONSIDER THEIR EXPERIENCE IN THE PROJECT'S GEOLOGIC AND SUBSURFACE SETTING AND THEIR EXPERIENCE IN DEALING WITH VARIABLE SUBSURFACE CONDITIONS ACROSS A PROJECT SITE TO BASE THEIR BID UPON AND DECISIONS REGARDING APPROPRIATE EQUIPMENT TO BE UTILIZED.

PRELIMINARY PLANS

SEALED BY

TENNESSEE METRIC

COORDINATES ARE NAD/83(1995), ARE DATUM ADJUSTED BY THE FACTOR OF 1.000 AND TIED TO THE TGRN. ALL ELEVATIONS ARE REFERENCED TO THE NAVD 1988.

STATE OF TENNESSEE
DEPARTMENT OF TRANSPORTATION

SOIL BORING LOGS
RETAINING WALLS
NO. 7 AND 8

SCALE: AS NOTED

9/9/2015
R:_Infrastructure Project Files\2015 Infra Projects\7681-15-002 ALCOA Hwy (SR 115) WALLS 7 AND 8\06 - CADD\03-23 RETAINING WALL NO. 7 AND 8 SOIL BORING LOGS.SHT

| TYPE | YEAR | PROJECT NO. | SHEET NO. |
|---|---|---|---|
| CONST. | 2015 | 47026-3279-14 | ---- |

amec foster wheeler — GEOTECHNICAL BRANCH, NASHVILLE, TENNESSEE

LOG OF BORING B-32, SHEET 1 OF 1

PROJECT: ALCOA HIGHWAY WIDENING (SR-115) RETAINING WALLS 7 AND 8 — DRILLER: TRI-STATE DRILLING
PROJECT NO.: 7681-15-002 — ON-SITE REP.: WDS
BORING NO. / LOCATION: STA 6+175, 21.7 m Left — DRY ON COMPLETION ?: YES
DATE: August 5, 2015 — SURFACE ELEV.: 962.3 FT. 293.3 M
REFUSAL: DEPTH 9.0 FT. 2.7 M — ELEV. 953.3 FT. 290.6 M
SAMPLED: NA FT. ___ M
TOP OF ROCK: DEPTH NA FT. ___ M — ELEV. ___ FT. ___ M
BEGAN CORING: DEPTH NA FT. ___ M — ELEV. ___ FT. ___ M
FOOTAGE CORED (LF): 0.0 FT. 0.0 M
BOTTOM OF HOLE: DEPTH 9.0 FT. 2.7 M — ELEV. 953.3 FT. 290.6 M
BORING ADVANCED BY: ___ — POWER AUGERING: X — WASHBORING: ___

WATER LEVEL DATA (IF APPLICABLE): COMPLETION: DEPTH ___ FT. ___ M; ELEV. ___ FT. ___ M; AFTER 24 HRS.: DEPTH ___ FT. ___ M; ELEV. ___ FT. ___ M; LDW AT: DEPTH ___ FT. ___ M; ELEV. ___ FT. ___ M

| STRATUM DEPTH FT. | STRATUM DEPTH M. | SAMPLE DEPTH FROM FT. | SAMPLE DEPTH FROM M. | SAMPLE DEPTH TO FT. | SAMPLE DEPTH TO M. | SAMPLE OR RUN NO. | SAMPLE TYPE | SPLE/CORE RECOV'D (IN.) | SPT VALUES 6" | 6" | 6" | N | STRATUM DESCRIPTION |
|---|---|---|---|---|---|---|---|---|---|---|---|---|---|
| | | 0.0 | 0.00 | | | | | | | | | | |
| 2.5 | 0.76 | | | | | | | | | | | | |
| 5.0 | 1.52 | | | | | | A | | | | | | Clay, very sandy, reddish-brown (Moist) |
| 7.5 | 2.29 | | | | | | | | | | | | |
| | | | | 9.0 | 2.74 | | | | | | | | |
| 10.0 | 3.05 | | | | | | | | | | | | AUGER REFUSAL @ 9.0' DRY ON COMPLETION AUGERS LEADING OFF |
| 12.5 | 3.81 | | | | | | | | | | | | |
| 15.0 | 4.57 | | | | | | | | | | | | |
| 17.5 | 5.33 | | | | | | | | | | | | |
| 20.0 | 6.10 | | | | | | | | | | | | |

REMARKS: 6 FOOT SIDE HILL CUT

amec foster wheeler — GEOTECHNICAL BRANCH, NASHVILLE, TENNESSEE

LOG OF BORING B-34, SHEET 1 OF 1

PROJECT: ALCOA HIGHWAY WIDENING (SR-115) RETAINING WALLS 7 AND 8 — DRILLER: TRI-STATE DRILLING
PROJECT NO.: 7681-15-002 — ON-SITE REP.: WDS
BORING NO. / LOCATION: STA 6+205, 20.5 m Left — DRY ON COMPLETION ?: YES
DATE: August 5, 2015 — SURFACE ELEV.: 952.9 FT. 290.4 M
REFUSAL: DEPTH 16.5 FT. 5.0 M — ELEV. 936.4 FT. 285.4 M
SAMPLED: NA FT. ___ M
TOP OF ROCK: DEPTH NA FT. ___ M — ELEV. ___ FT. ___ M
BEGAN CORING: DEPTH NA FT. ___ M — ELEV. ___ FT. ___ M
FOOTAGE CORED (LF): 0.0 FT. 0.0 M
BOTTOM OF HOLE: DEPTH 16.5 FT. 5.0 M — ELEV. 936.4 FT. 285.4 M
BORING ADVANCED BY: ___ — POWER AUGERING: X — WASHBORING: ___

WATER LEVEL DATA (IF APPLICABLE): COMPLETION: DEPTH ___ FT. ___ M; ELEV. ___ FT. ___ M; AFTER 24 HRS.: DEPTH ___ FT. ___ M; ELEV. ___ FT. ___ M; LDW AT: DEPTH ___ FT. ___ M; ELEV. ___ FT. ___ M

| STRATUM DEPTH FT. | STRATUM DEPTH M. | SAMPLE DEPTH FROM FT. | SAMPLE DEPTH FROM M. | SAMPLE DEPTH TO FT. | SAMPLE DEPTH TO M. | SAMPLE OR RUN NO. | SAMPLE TYPE | SPLE/CORE RECOV'D (IN.) | SPT VALUES 6" | 6" | 6" | N | STRATUM DESCRIPTION |
|---|---|---|---|---|---|---|---|---|---|---|---|---|---|
| | | 0.0 | 0.00 | | | | | | | | | | |
| 2.5 | 0.76 | | | | | | | | | | | | |
| 5.0 | 1.52 | | | | | | | | | | | | |
| 7.5 | 2.29 | | | | | | A | | | | | | Clay, sandy, silty, reddish-brown (Moist) |
| | | | | 16.5 | 5.03 | | | | | | | | |
| 10.0 | 3.05 | | | | | | | | | | | | |
| 12.5 | 3.81 | | | | | | | | | | | | |
| 15.0 | 4.57 | | | | | | | | | | | | |
| 17.5 | 5.33 | | | | | | | | | | | | AUGER REFUSAL @ 16.5' DRY ON COMPLETION |
| 20.0 | 6.10 | | | | | | | | | | | | |

REMARKS: 5 FOOT SIDE HILL CUT

amec foster wheeler — GEOTECHNICAL BRANCH, NASHVILLE, TENNESSEE

LOG OF BORING B-36, SHEET 1 OF 1

PROJECT: ALCOA HIGHWAY WIDENING (SR-115) RETAINING WALLS 7 AND 8 — DRILLER: TRI-STATE DRILLING
PROJECT NO.: 7681-15-002 — ON-SITE REP.: WDS
BORING NO. / LOCATION: STA 6+235, 20.5 m Left — DRY ON COMPLETION ?: YES
DATE: August 5, 2015 — SURFACE ELEV.: 945.5 FT. 288.2 M
REFUSAL: DEPTH 6.5 FT. 2.0 M — ELEV. 939.0 FT. 286.2 M
SAMPLED: NA FT. ___ M
TOP OF ROCK: DEPTH NA FT. ___ M — ELEV. ___ FT. ___ M
BEGAN CORING: DEPTH NA FT. ___ M — ELEV. ___ FT. ___ M
FOOTAGE CORED (LF): 0.0 FT. 0.0 M
BOTTOM OF HOLE: DEPTH 6.5 FT. 2.0 M — ELEV. 939.0 FT. 286.2 M
BORING ADVANCED BY: ___ — POWER AUGERING: X — WASHBORING: ___

WATER LEVEL DATA (IF APPLICABLE): COMPLETION: DEPTH ___ FT. ___ M; ELEV. ___ FT. ___ M; AFTER 24 HRS.: DEPTH ___ FT. ___ M; ELEV. ___ FT. ___ M; LDW AT: DEPTH ___ FT. ___ M; ELEV. ___ FT. ___ M

| STRATUM DEPTH FT. | STRATUM DEPTH M. | SAMPLE DEPTH FROM FT. | SAMPLE DEPTH FROM M. | SAMPLE DEPTH TO FT. | SAMPLE DEPTH TO M. | SAMPLE OR RUN NO. | SAMPLE TYPE | SPLE/CORE RECOV'D (IN.) | SPT VALUES 6" | 6" | 6" | N | STRATUM DESCRIPTION |
|---|---|---|---|---|---|---|---|---|---|---|---|---|---|
| | | 0.0 | 0.00 | | | | | | | | | | |
| 2.5 | 0.76 | | | | | | | | | | | | |
| 5.0 | 1.52 | | | | | | A | | | | | | Clay, sandy, silty, reddish-brown (Moist) |
| 7.5 | 2.29 | | | | | | | | | | | | |
| | | | | 6.5 | 1.98 | | | | | | | | |
| 10.0 | 3.05 | | | | | | | | | | | | |
| 12.5 | 3.81 | | | | | | | | | | | | AUGER REFUSAL @ 6.5' DRY ON COMPLETION |
| 15.0 | 4.57 | | | | | | | | | | | | |
| 17.5 | 5.33 | | | | | | | | | | | | |
| 20.0 | 6.10 | | | | | | | | | | | | |

REMARKS: 6 FOOT SIDE HILL CUT

amec foster wheeler — GEOTECHNICAL BRANCH, NASHVILLE, TENNESSEE

LOG OF BORING B-37, SHEET 2 OF 2

PROJECT: ALCOA HIGHWAY WIDENING (SR-115) RETAINING WALLS 7 AND 8 — DRILLER: TRI-STATE DRILLING
PROJECT NO.: 7681-15-002 — ON-SITE REP.: WDS
BORING NO. / LOCATION: STA 6+250, 24.2 m Left — DRY ON COMPLETION ?: YES, PRIOR TO CORING
DATE: 8-5-2015 TO 8-6-2015 — SURFACE ELEV.: 940.1 FT. 286.5 M
REFUSAL: DEPTH 20.0 FT. 6.1 M — ELEV. 920.1 FT. 280.4 M
SAMPLED: 20.0 FT. 6.1 M
TOP OF ROCK: DEPTH 20.0 FT. 6.1 M — ELEV. 920.1 FT. 280.4 M
BEGAN CORING: DEPTH 20.0 FT. 6.1 M — ELEV. 920.1 FT. 280.4 M
FOOTAGE CORED (LF): 14.1 FT. 4.3 M
BOTTOM OF HOLE: DEPTH 34.1 FT. 10.4 M — ELEV. 906.0 FT. 276.1 M
BORING ADVANCED BY: CORING — POWER AUGERING: X — WASHBORING: ___

WATER LEVEL DATA (IF APPLICABLE): COMPLETION: DEPTH ___ FT. ___ M; ELEV. ___ FT. ___ M; AFTER 24 HRS.: DEPTH ___ FT. ___ M; ELEV. ___ FT. ___ M; LDW AT: DEPTH 20.0 FT. 6.1 M; ELEV. 920.1 FT. 280.4 M

| STRATUM DEPTH FT. | STRATUM DEPTH M. | SAMPLE DEPTH FROM FT. | SAMPLE DEPTH FROM M. | SAMPLE DEPTH TO FT. | SAMPLE DEPTH TO M. | SAMPLE OR RUN NO. | SAMPLE TYPE | SPLE/CORE RECOV'D (IN.) | "SPT" VALUES 6" | 6" | 6" | N | DESCRIPTION |
|---|---|---|---|---|---|---|---|---|---|---|---|---|---|
| | | 20.0 | 6.10 | | | | | | | | | | Begin NQ Coring @ 20.0', 100% DWL |
| 22.5 | 6.86 | | | | | | | | | | | | Sand filled cavity 20.0 to 23.4, Loss 3.4' Sandstone, calcareous, siliceous, gray DIP 35° |
| | | | | | | | | | | | | | CORRECTED DEPTH 23.9 |
| 25.0 | 7.62 | | | 24.7 | 7.53 | | | | | | | | --- with soft parting and clay filled cavity 24.8 to 24.9 and 25.1 to 25.2 respectively |
| | | 24.7 | 7.529 | | | RUN 2 RAN 2.4 REC 2.8 RQD 93% | | | | | | | CORRECTED DEPTH 26.7 |
| | | | | 27.1 | 8.26 | | | | | | | | |
| 27.5 | 8.38 | 27.1 | 8.26 | | | RUN 3 RAN 2.5 REC 1.9 RQD 100% | | | | | | | |
| | | | | 29.6 | 9.02 | | | | | | | | CORRECTED DEPTH 29.0 |
| 30.0 | 9.14 | 29.6 | 9.022 | | | RUN 4 RAN 4.5 REC 5.1 RQD 90% | | | | | | | |
| | | | | 30.5 | 9.30 | | | | | | | | $q_u$=179.0 MPa, γ=26.46 kN/m³, 29.4% quartz |
| 32.5 | 9.91 | | | | | | | | | | | | --- with open, stained diagonal bedding plane 31.6 to 31.8, open stained leached 33.0 to 33.1, and open stained, leached with diagonal fractures 33.4 to 33.6 DIP 50° to 70° |
| | | | | 34.1 | 10.39 | | | | | | | | |
| 35.0 | 10.67 | | | | | | | | | | | | BORING TERMINATED @ 34.1' 100% DWL |
| 37.5 | 11.43 | | | | | | | | | | | | |
| 40.0 | 12.19 | | | | | | | | | | | | |

REMARKS: ___

amec foster wheeler — GEOTECHNICAL BRANCH, NASHVILLE, TENNESSEE

LOG OF BORING B-33, SHEET 1 OF 1

PROJECT: ALCOA HIGHWAY WIDENING (SR-115) RETAINING WALLS 7 AND 8 — DRILLER: TRI-STATE DRILLING
PROJECT NO.: 7681-15-002 — ON-SITE REP.: WDS
BORING NO. / LOCATION: Sta 6+190, Offset 23.7 m, left — DRY ON COMPLETION ?: YES, PRIOR TO CORING
DATE: August 24, 2015 — SURFACE ELEV.: 962.4 FT. 293.3 M
REFUSAL: DEPTH 9.2 FT. 2.8 M — ELEV. 953.2 FT. 290.5 M
SAMPLED: 9.2 FT. 2.8 M
TOP OF ROCK: DEPTH 9.2 FT. 2.8 M — ELEV. 953.2 FT. 290.5 M
BEGAN CORING: DEPTH 9.2 FT. 2.8 M — ELEV. 953.2 FT. 290.5 M
FOOTAGE CORED (LF): 10.7 FT. 3.3 M
BOTTOM OF HOLE: DEPTH 19.9 FT. 6.1 M — ELEV. 942.5 FT. 287.3 M
BORING ADVANCED BY: CORING — POWER AUGERING: X — WASHBORING: ___

WATER LEVEL DATA (IF APPLICABLE): COMPLETION: DEPTH ___ FT. ___ M; ELEV. ___ FT. ___ M; AFTER 24 HRS.: DEPTH ___ FT. ___ M; ELEV. ___ FT. ___ M; LDW AT: DEPTH ___ FT. ___ M; ELEV. ___ FT. ___ M

| STRATUM DEPTH FT. | STRATUM DEPTH M. | SAMPLE DEPTH FROM FT. | SAMPLE DEPTH FROM M. | SAMPLE DEPTH TO FT. | SAMPLE DEPTH TO M. | SAMPLE OR RUN NO. | SAMPLE TYPE | SPLE/CORE RECOV'D (IN.) | SPT VALUES 6" | 6" | 6" | N | STRATUM DESCRIPTION |
|---|---|---|---|---|---|---|---|---|---|---|---|---|---|
| | | 0.0 | 0.00 | | | | A | | | | | | |
| | | 1.0 | 0.30 | 1.0 | 0.30 | | | | | | | | |
| 2.5 | 0.76 | | | 2.5 | 0.76 | S-1 | SS | 18 | 2 | 4 | 5 | 9 | Sand (F-M), silty, brown (Moist)(Loose)Decomposed Sandstone) |
| | | 2.5 | 0.76 | | | | A | | | | | | |
| | | 3.5 | 1.07 | 3.5 | 1.07 | | | | | | | | |
| 5.0 | 1.52 | | | | | S-2 | SS | 16 | 3 | 5 | 6 | 11 | DO1 (Medium Dense) |
| | | 5.0 | 1.52 | 5.0 | 1.52 | | A | | | | | | |
| | | 6.0 | 1.83 | 6.0 | 1.83 | S-3 | SS | 16 | 5 | 6 | 5 | 11 | DO2 |
| 7.5 | 2.29 | 7.5 | 2.29 | | | | | | | | | | |
| | | | | 7.5 | 2.29 | | A | | | | | | |
| | | | | 9.2 | 2.80 | | | | | | | | AUGER REFUSAL @ 9.2', DRY PRIOR TO CORING |
| | | 9.2 | 2.80 | | | RUN 1 RAN 5.7 REC 4.0 RQD 47% | | | | | | | BEGIN NQ CORING @ 9.2', 100% DWR |
| 10.0 | 3.05 | | | | | | | | | | | | 9.2' to 9.8' Probable side wall drilling, Loss 0.6' Sandstone, calcareous, gray to wea. reddish-brown 11.0' to 11.5' Partial core, open, stained, leached weathered; open cavity 12.4' to 13.0', Loss 0.6'; with open, stained, leached diagonal bedding planes; 14.5' to 14.9', Loss 0.4' |
| 12.5 | 3.81 | | | | | | | | | | | | |
| | | | | 14.9 | 4.54 | | | | | | | | |
| 15.0 | 4.57 | 14.9 | 4.54 | | | RUN 2 RAN 5.0 REC 4.9 RQD 70% | | | | | | | |
| 17.5 | 5.33 | | | | | | | | | | | | |
| | | | | 19.9 | 6.07 | | | | | | | | |
| 20.0 | 6.10 | | | | | | | | | | | | BORING TERMINATED @ 19.9', 100% DWR |

REMARKS: BORING IN 8 FOOT BENCH

amec foster wheeler — GEOTECHNICAL BRANCH, NASHVILLE, TENNESSEE

LOG OF BORING B-35, SHEET 1 OF 1

PROJECT: ALCOA HIGHWAY WIDENING (SR-115) RETAINING WALLS 7 AND 8 — DRILLER: TRI-STATE DRILLING
PROJECT NO.: 7681-15-002 — ON-SITE REP.: WDS
BORING NO. / LOCATION: STA 6+220, 18.6 m Left — DRY ON COMPLETION ?: YES, PRIOR TO CORING
DATE: August 6, 2015 — SURFACE ELEV.: 949.6 FT. 289.4 M
REFUSAL: DEPTH 2.0 FT. 0.6 M — ELEV. 947.6 FT. 288.8 M
SAMPLED: NA FT. ___ M
TOP OF ROCK: DEPTH 2.0 FT. 0.6 M — ELEV. 947.6 FT. 288.8 M
BEGAN CORING: DEPTH 2.0 FT. 0.6 M — ELEV. 947.6 FT. 288.8 M
FOOTAGE CORED (LF): 13.0 FT. 4.0 M
BOTTOM OF HOLE: DEPTH 15.0 FT. 4.6 M — ELEV. 934.6 FT. 284.9 M
BORING ADVANCED BY: CORING — POWER AUGERING: X — WASHBORING: ___

WATER LEVEL DATA (IF APPLICABLE): COMPLETION: DEPTH ___ FT. ___ M; ELEV. ___ FT. ___ M; AFTER 24 HRS.: DEPTH ___ FT. ___ M; ELEV. ___ FT. ___ M; LDW AT: DEPTH 13.2 FT. 4.0 M; ELEV. 936.4 FT. 285.4 M

| STRATUM DEPTH FT. | STRATUM DEPTH M. | SAMPLE DEPTH FROM FT. | SAMPLE DEPTH FROM M. | SAMPLE DEPTH TO FT. | SAMPLE DEPTH TO M. | SAMPLE OR RUN NO. | SAMPLE TYPE | SPLE/CORE RECOV'D (IN.) | SPT VALUES 6" | 6" | 6" | N | STRATUM DESCRIPTION |
|---|---|---|---|---|---|---|---|---|---|---|---|---|---|
| | | 0.0 | 0.00 | | | | A | | | | | | |
| | | | | 2.0 | 0.61 | | | | | | | | Clay, sandy, silty, reddish-brown |
| 2.5 | 0.76 | 2.0 | 0.61 | | | | | | | | | | Auger Refusal @ 2.0', Dry On Completion |
| | | | | | | RUN 1 RAN 3.0 REC 2.7 RQD 67% | | | | | | | Begin NQ Coring @ 2.0', 100% DWR |
| 5.0 | 1.52 | | | 5.0 | 1.52 | | | | | | | | Sandstone, calcareous, gray, variably weathered. Open stained, leached 3.1 to 3.3; open stained leached with very sandy clay 3.5 to 3.9, Loss 0.3 |
| | | 5.0 | 1.52 | | | RUN 2 RAN 5.0 REC 4.8 RQD 70% | | | | | | | |
| 7.5 | 2.29 | | | | | | | | | | | | --- with open, stained diagonal bedding planes; variably stained, leached fractured with open stained diagonal bedding planes 8.8 to 9.8 |
| | | | | 10.0 | 3.05 | | | | | | | | Lost 0.2 at bottom |
| 10.0 | 3.05 | 10.0 | 3.05 | | | RUN 3 RAN 5.0 REC 4.1 RQD 82% | | | | | | | |
| 12.5 | 3.81 | | | | | | | | | | | | --- with open sand filled cavity 13.5 to 14.4, Loss 0.9 |
| | | | | 15.0 | 4.57 | | | | | | | | |
| 15.0 | 4.57 | | | | | | | | | | | | |
| 17.5 | 5.33 | | | | | | | | | | | | |
| 20.0 | 6.10 | | | | | | | | | | | | BORING TERMINATED AT 15.0' 100% DWL |

REMARKS: BORNG ADJACENT TO ROCK OUTCROPS AND SURFACE BOULDERS

amec foster wheeler — GEOTECHNICAL BRANCH, NASHVILLE, TENNESSEE

LOG OF BORING B-37, SHEET 1 OF 2

PROJECT: ALCOA HIGHWAY WIDENING (SR-115) RETAINING WALLS 7 AND 8 — DRILLER: TRI-STATE DRILLING
PROJECT NO.: 7681-15-002 — ON-SITE REP.: WDS
BORING NO. / LOCATION: STA 6+250, 24.2 m Left — DRY ON COMPLETION ?: YES, PRIOR TO CORING
DATE: 8-5-2015 TO 8-6-2015 — SURFACE ELEV.: 940.1 FT. 286.5 M
REFUSAL: DEPTH 20.0 FT. 6.1 M — ELEV. 920.1 FT. 280.4 M
SAMPLED: 20.0 FT. 6.1 M
TOP OF ROCK: DEPTH 20.0 FT. 6.1 M — ELEV. 920.1 FT. 280.4 M
BEGAN CORING: DEPTH 20.0 FT. 6.1 M — ELEV. 920.1 FT. 280.4 M
FOOTAGE CORED (LF): 14.1 FT. 4.3 M
BOTTOM OF HOLE: DEPTH 34.1 FT. 10.4 M — ELEV. 906.0 FT. 276.1 M
BORING ADVANCED BY: CORING — POWER AUGERING: X — WASHBORING: ___

WATER LEVEL DATA (IF APPLICABLE): COMPLETION: DEPTH ___ FT. ___ M; ELEV. ___ FT. ___ M; AFTER 24 HRS.: DEPTH ___ FT. ___ M; ELEV. ___ FT. ___ M; LDW AT: DEPTH 20.0 FT. 6.1 M; ELEV. 920.1 FT. 280.4 M

| STRATUM DEPTH FT. | STRATUM DEPTH M. | SAMPLE DEPTH FROM FT. | SAMPLE DEPTH FROM M. | SAMPLE DEPTH TO FT. | SAMPLE DEPTH TO M. | SAMPLE OR RUN NO. | SAMPLE TYPE | SPLE/CORE RECOV'D (IN.) | SPT VALUES 6" | 6" | 6" | N | STRATUM DESCRIPTION |
|---|---|---|---|---|---|---|---|---|---|---|---|---|---|
| | | 0.0 | 0.00 | | | | A | | | | | | |
| | | 1.0 | 0.30 | 1.0 | 0.30 | | | | | | | | |
| 2.5 | 0.76 | | | 2.5 | 0.76 | S-1 | SS | 14 | 3 | 4 | 5 | 9 | Clay, very sandy, silty, reddish-brown (Moist)(Stiff) |
| | | 2.5 | 0.76 | | | | A | | | | | | |
| | | 3.5 | 1.07 | 3.5 | 1.07 | | | | | | | | |
| 5.0 | 1.52 | | | | | S-2 | SS | 14 | 3 | 3 | 4 | 7 | Sand (F-M), silty, clayey, reddish-brown (Moist)(Loose) |
| | | 5.0 | 1.52 | 5.0 | 1.52 | | A | | | | | | |
| | | 6.0 | 1.83 | 6.0 | 1.83 | S-3 | SS | 16 | 2 | 4 | 5 | 9 | DO2 with sandstone fragments (Moist)(Loose) |
| 7.5 | 2.29 | 7.5 | 2.29 | | | | | | | | | | |
| | | | | 7.5 | 2.29 | | A | | | | | | |
| | | 8.5 | 2.59 | | | | | | | | | | |
| | | | | 8.5 | 2.59 | | | | | | | | |
| 10.0 | 3.05 | | | | | S-4 | SS | 16 | 2 | 4 | 5 | 9 | Clay, sandy, silty, reddish-brown/ yellowish-brown (Moist)(Stiff)(Decomposed Sandstone/ Siltstone) |
| | | 10.0 | 3.05 | | | | | | | | | | |
| | | | | 10.0 | 3.05 | | | | | | | | Augers down side rock from 10' to 13' |
| 12.5 | 3.81 | | | | | | A | | | | | | |
| | | | | 13.5 | 4.11 | | | | | | | | |
| | | 13.5 | 4.11 | | | | | | | | | | |
| 15.0 | 4.57 | | | | | S-5 | SS | 16 | 2 | 2 | 2 | 4 | Sand (F-M), clayey, silty, reddish-brown/ yellowish-brown (Moist)(Very Loose) (Decomposed Sandstone/ Siltstone) |
| | | 15.0 | 4.57 | | | | | | | | | | |
| 17.5 | 5.33 | | | | | | A | | | | | | |
| | | | | 18.5 | 5.64 | | | | | | | | |
| | | 18.5 | 5.64 | | | | | | | | | | |
| | | | | 20.0 | 6.10 | | | | | | | | |
| 20.0 | 6.10 | | | | | S-6 | SS | 16 | 1 | 1 | 2 | 3 | DO5 |

REMARKS: Continued On Page 2.

amec foster wheeler — GEOTECHNICAL BRANCH, NASHVILLE, TENNESSEE

LOG OF BORING B-38, SHEET 1 OF 2

PROJECT: ALCOA HIGHWAY WIDENING (SR-115) RETAINING WALLS 7 AND 8 — DRILLER: TRI-STATE DRILLING
PROJECT NO.: 7681-15-002 — ON-SITE REP.: WDS
BORING NO. / LOCATION: STA 6+691, 19.5 m, Left — DRY ON COMPLETION ?: YES
DATE: August 24, 2015 — SURFACE ELEV.: 905.9 FT. 276.1 M
REFUSAL: DEPTH NA FT. ___ M — ELEV. ___ FT. ___ M
SAMPLED: 40.0 FT. 12.2 M
TOP OF ROCK: DEPTH NA FT. ___ M — ELEV. ___ FT. ___ M
BEGAN CORING: DEPTH NA FT. ___ M — ELEV. ___ FT. ___ M
FOOTAGE CORED (LF): 0.0 FT. 0.0 M
BOTTOM OF HOLE: DEPTH 40.0 FT. 12.2 M — ELEV. 865.9 FT. 263.9 M
BORING ADVANCED BY: ___ — POWER AUGERING: X — WASHBORING: ___

WATER LEVEL DATA (IF APPLICABLE): COMPLETION: DEPTH ___ FT. ___ M; ELEV. ___ FT. ___ M; AFTER 24 HRS.: DEPTH ___ FT. ___ M; ELEV. ___ FT. ___ M; LDW AT: DEPTH ___ FT. ___ M; ELEV. ___ FT. ___ M

| STRATUM DEPTH FT. | STRATUM DEPTH M. | SAMPLE DEPTH FROM FT. | SAMPLE DEPTH FROM M. | SAMPLE DEPTH TO FT. | SAMPLE DEPTH TO M. | SAMPLE OR RUN NO. | SAMPLE TYPE | SPLE/CORE RECOV'D (IN.) | SPT VALUES 6" | 6" | 6" | N | STRATUM DESCRIPTION |
|---|---|---|---|---|---|---|---|---|---|---|---|---|---|
| | | 0.0 | 0.00 | | | | | | | | | | |
| | | | | 3.0 | 0.91 | | A | | | | | | Crushed rock to 3.0' (FILL) |
| 2.5 | 0.76 | | | | | | | | | | | | |
| | | 3.0 | 0.91 | 3.5 | 1.07 | | | | | | | | |
| | | 3.5 | 1.07 | | | | | | | | | | |
| 5.0 | 1.52 | | | 5.0 | 1.52 | S-1 | SS | 1 | 4 | 4 | 5 | 9 | Sand (F-M), silty, yellowish-brown with rock fragment (moist)(Loose) |
| | | 5.0 | 1.52 | | | | A | | | | | | |
| | | 6.0 | 1.83 | 6.0 | 1.83 | | | | | | | | |
| 7.5 | 2.29 | | | | | S-2 | SS | 18 | 4 | 4 | 5 | 9 | Clay, silty, yellowish-brown (Moist)(Stiff) |
| | | 7.5 | 2.29 | | | | A | | | | | | |
| | | 8.5 | 2.59 | | | | | | | | | | |
| | | | | 8.5 | 2.59 | | | | | | | | |
| 10.0 | 3.05 | | | | | S-3 | SS | 18 | 3 | 4 | 5 | 9 | DO2 |
| | | 10.0 | 3.05 | | | | | | | | | | |
| | | | | 10.0 | 3.05 | | | | | | | | |
| 12.5 | 3.81 | | | | | | A | | | | | | |
| | | | | 13.5 | 4.11 | | | | | | | | |
| | | 13.5 | 4.11 | | | | | | | | | | |
| 15.0 | 4.57 | | | | | S-4 | SS | 18 | 3 | 3 | 4 | 7 | DO2 to reddish-brown (Medium Stiff) |
| | | 15.0 | 4.57 | | | | | | | | | | |
| 17.5 | 5.33 | | | | | | A | | | | | | |
| | | | | 18.5 | 5.64 | | | | | | | | |
| | | 18.5 | 5.64 | | | | | | | | | | |
| | | | | 20.0 | 6.10 | | | | | | | | |
| 20.0 | 6.10 | | | | | S-5 | SS | 18 | 3 | 3 | 4 | 7 | DO4 |

REMARKS: Continued On Page 2.

CONTRACTOR NOTES:

1. THE GEOTECHNICAL REPORT WHICH INCLUDES DETAILED BORING RECORDS, SOIL AND ROCK TESTING DATA IS AVAILABLE UPON REQUEST. ROCK CORE SAMPLES ARE AVAILABLE FOR INSPECTION BY THE CONTRACTOR.

2. IT IS THE RESPONSIBILITY OF THE CONTRACTOR TO REVIEW THE PLANS, GEOTECHNICAL REPORT, AND BORING LOGS TO BECOME FAMILIAR WITH THE SUBSURFACE CONDITIONS PERTINENT TO THE ASSOCIATED WORK TO BE CONDUCTED BY THE CONTRACTOR. THE CONTRACTOR SHOULD ALSO CONSIDER THEIR EXPERIENCE IN THE PROJECT'S GEOLOGIC AND SUBSURFACE SETTING AND THEIR EXPERIENCE IN DEALING WITH VARIABLE SUBSURFACE CONDITIONS ACROSS A PROJECT SITE TO BASE THEIR BID UPON AND DECISIONS REGARDING APPROPRIATE EQUIPMENT TO BE UTILIZED.

PRELIMINARY PLANS

SEALED BY

TENNESSEE METRIC D.O.T.

COORDINATES ARE NAD/83(1995), ARE DATUM ADJUSTED BY THE FACTOR OF 1.000 AND TIED TO THE TGRN. ALL ELEVATIONS ARE REFERENCED TO THE NAVD 1988.

STATE OF TENNESSEE
DEPARTMENT OF TRANSPORTATION

SOIL BORING LOGS
RETAINING WALLS
NO. 7 AND 8

SCALE: AS NOTED

9/9/2015
R:_Infrastructure Project Files\2015 Infra Projects\7681-15-002 ALCOA Hwy (SR 115) WALLS 7 AND 8\06 - CADD\03-23-RETAINING WALL NO. 7 AND 8 SOIL BORING LOGS.SHT

| TYPE | YEAR | PROJECT NO. | SHEET NO. |
|---|---|---|---|
| CONST. | 2015 | 47026-3279-14 | ---- |

amec foster wheeler — GEOTECHNICAL BRANCH, NASHVILLE, TENNESSEE

LOG OF BORING B-38, SHEET 2 OF 2

PROJECT: ALCOA HIGHWAY WIDENING (SR-115) RETAINING WALLS 7 AND 8 — DRILLER: TRI-STATE DRILLING
PROJECT NO.: 7681-15-002 — ON-SITE REP.: WDS
BORING NO. / LOCATION: STA 5+691, 19.5 m, Left — DRY ON COMPLETION ?: YES
DATE: August 24, 2015 — SURFACE ELEV.: 905.9 FT. 276.1 M
REFUSAL: DEPTH NA FT. M — ELEV. FT. M
SAMPLED: 40.0 FT. 12.2 M
TOP OF ROCK: DEPTH NA FT. M — ELEV. FT. M
BEGAN CORING: DEPTH NA FT. M — ELEV. FT. M
FOOTAGE CORED (LF): 0.0 FT. 0.0 M
BOTTOM OF HOLE: DEPTH 40.0 FT. 12.2 M — ELEV. 865.9 FT. 263.9 M
BORING ADVANCED BY: — POWER AUGERING: X — WASHBORING:

WATER LEVEL DATA (IF APPLICABLE): COMPLETION: DEPTH FT. M, ELEV. FT. M; AFTER 24 HRS: DEPTH FT. M, ELEV. FT. M; LDW AT: DEPTH FT. M, ELEV. FT. M

| STRATUM DEPTH FT. | STRATUM DEPTH M. | SAMPLE DEPTH FROM FT. | SAMPLE DEPTH FROM M. | SAMPLE DEPTH TO FT. | SAMPLE DEPTH TO M. | SAMPLE OR RUN NO. | SAMPLE TYPE | SPLE/CORE RECOV'D (IN.) | SPT VALUES 6" | 6" | 6" | N | DESCRIPTION |
|---|---|---|---|---|---|---|---|---|---|---|---|---|---|
| 22.5 | 6.86 | 20.0 | 6.10 | 23.5 | 7.16 | | A | | | | | | |
| 25.0 | 7.62 | 23.5 | 7.163 | 25.0 | 7.62 | S-6 | SS | 18 | 2 | 4 | 4 | 8 | Clay, silty, tan to reddish-brown (Moist)(Medium Stiff) |
| 27.5 | 8.38 | 25.0 | 7.62 | 28.5 | 8.69 | | A | | | | | | |
| 30.0 | 9.14 | 28.5 | 8.687 | 30.0 | 9.14 | S-7 | SS | 18 | 3 | 4 | 4 | 8 | DO6, yellowish-brown |
| 32.5 | 9.91 | 30.0 | 9.144 | 33.5 | 10.21 | | A | | | | | | |
| 35.0 | 10.67 | 33.5 | 10.21 | 35.0 | 10.67 | S-8 | SS | 18 | 3 | 3 | 4 | 7 | DO6, sandy, brown |
| 37.5 | 11.43 | 35.0 | 10.67 | 38.5 | 11.73 | | A | | | | | | |
| 40.0 | 12.19 | 38.5 | 11.73 | 40.0 | 12.19 | S-9 | SS | 18 | 3 | 3 | 4 | 7 | Silt, sandy, brown (Moist)(Medium Stiff) |

NO REFUSAL @ 40.0, DRY ON COMPLETION

REMARKS:

amec foster wheeler — GEOTECHNICAL BRANCH, NASHVILLE, TENNESSEE

LOG OF BORING B-39, SHEET 2 OF 3

PROJECT: ALCOA HIGHWAY WIDENING (SR-115) RETAINING WALLS 7 AND 8 — DRILLER: TRI-STATE DRILLING
PROJECT NO.: 7681-15-002 — ON-SITE REP.: WDS
BORING NO. / LOCATION: STA 5+740, 23 m Left — DRY ON COMPLETION ?: YES
DATE: September 2, 2015 — SURFACE ELEV.: 933.3 FT. 284.5 M
REFUSAL: DEPTH NA FT. M — ELEV. FT. M
SAMPLED: 55.0 FT. 16.8 M
TOP OF ROCK: DEPTH NA FT. M — ELEV. FT. M
BEGAN CORING: DEPTH NA FT. M — ELEV. FT. M
FOOTAGE CORED (LF): 0.0 FT. 0.0 M
BOTTOM OF HOLE: DEPTH 55.0 FT. 16.8 M — ELEV. 878.3 FT. 267.7 M
BORING ADVANCED BY: — POWER AUGERING: X — WASHBORING:

WATER LEVEL DATA (IF APPLICABLE): COMPLETION: DEPTH FT. M, ELEV. FT. M; AFTER 24 HRS.: DEPTH FT. M, ELEV. FT. M; LDW AT: DEPTH FT. M, ELEV. FT. M

| STRATUM DEPTH FT. | STRATUM DEPTH M. | SAMPLE DEPTH FROM FT. | SAMPLE DEPTH FROM M. | SAMPLE DEPTH TO FT. | SAMPLE DEPTH TO M. | SAMPLE OR RUN NO. | SAMPLE TYPE | SPLE/CORE RECOV'D (IN.) | SPT VALUES 6" | 6" | 6" | N | DESCRIPTION |
|---|---|---|---|---|---|---|---|---|---|---|---|---|---|
| 22.5 | 6.86 | 20.0 | 6.10 | 23.5 | 7.16 | | A | | | | | | |
| 25.0 | 7.62 | 23.5 | 7.163 | 25.0 | 7.62 | S-7 | SS | 18 | 5 | 9 | 14 | 23 | DO6 |
| 27.5 | 8.38 | 25.0 | 7.62 | 28.5 | 8.69 | | A | | | | | | |
| 30.0 | 9.14 | 28.5 | 8.687 | 30.0 | 9.14 | S-8 | SS | 18 | 8 | 11 | 15 | 26 | Silt, sandy, slightly clayey, yellowish-brown (moist)(Very Stiff)(Decomposed Siltstone) |
| 32.5 | 9.91 | 30.0 | 9.144 | 33.5 | 10.21 | | A | | | | | | |
| 35.0 | 10.67 | 33.5 | 10.21 | 35.0 | 10.67 | S-9 | SS | 18 | 8 | 10 | 11 | 21 | DO8 |
| 37.5 | 11.43 | 35.0 | 10.67 | 38.5 | 11.73 | | A | | | | | | |
| 40.0 | 12.19 | 38.5 | 11.73 | 40.0 | 12.19 | S-10 | SS | 18 | 8 | 12 | 12 | 24 | DO8 |

REMARKS: Continued On Page 3.

amec foster wheeler — GEOTECHNICAL BRANCH, NASHVILLE, TENNESSEE

LOG OF BORING B-40, SHEET 1 OF 3

PROJECT: ALCOA HIGHWAY WIDENING (SR-115) RETAINING WALLS 7 AND 8 — DRILLER: TRI-STATE DRILLING
PROJECT NO.: 7681-15-002 — ON-SITE REP.: WDS
BORING NO. / LOCATION: STA 5+769, 23 m Left — DRY ON COMPLETION ?: YES
DATE: September 3, 2015 — SURFACE ELEV.: 937.8 FT. 285.8 M
REFUSAL: DEPTH NA FT. M — ELEV. FT. M
SAMPLED: 55.0 FT. 16.8 M
TOP OF ROCK: DEPTH NA FT. M — ELEV. FT. M
BEGAN CORING: DEPTH NA FT. M — ELEV. FT. M
FOOTAGE CORED (LF): 0.0 FT. 0.0 M
BOTTOM OF HOLE: DEPTH 55.0 FT. 16.8 M — ELEV. 882.8 FT. 269.1 M
BORING ADVANCED BY: — POWER AUGERING: X — WASHBORING:

WATER LEVEL DATA (IF APPLICABLE): COMPLETION: DEPTH FT. M, ELEV. FT. M; AFTER 24 HRS.: DEPTH FT. M, ELEV. FT. M; LDW AT: DEPTH FT. M, ELEV. FT. M

| STRATUM DEPTH FT. | STRATUM DEPTH M. | SAMPLE DEPTH FROM FT. | SAMPLE DEPTH FROM M. | SAMPLE DEPTH TO FT. | SAMPLE DEPTH TO M. | SAMPLE OR RUN NO. | SAMPLE TYPE | SPLE/CORE RECOV'D (IN.) | SPT VALUES 6" | 6" | 6" | N | STRATUM DESCRIPTION |
|---|---|---|---|---|---|---|---|---|---|---|---|---|---|
| 2.5 | 0.76 | 0.0 | 0.00 | 1.0 | 0.30 | | A | | | | | | |
| 5.0 | 1.52 | 1.0 | 0.30 | 2.5 | 0.76 | S-1 | SS | 12 | 8 | 12 | 17 | 29 | Clay, silty, sandy, reddish-brown (moist)(Very Stiff) |
| 7.5 | 2.29 | 2.5 | 0.76 | 3.5 | 1.07 | | A | | | | | | |
| 10.0 | 3.05 | 3.5 | 1.07 | 5.0 | 1.52 | S-2 | SS | 15 | 11 | 17 | 19 | 36 | DO1, Hard |
| 12.5 | 3.81 | 5.0 | 1.52 | 6.0 | 1.83 | | A | | | | | | |
| 15.0 | 4.57 | 6.0 | 1.83 | 7.5 | 2.29 | S-3 | SS | 16 | 8 | 12 | 13 | 25 | Sand (F-M), silty, yellowish-brown (moist)(Medium Dense) |
| 17.5 | 5.33 | 7.5 | 2.29 | 8.5 | 2.59 | | A | | | | | | |
| 20.0 | 6.10 | 8.5 | 2.59 | 10.0 | 3.05 | S-4 | SS | 16 | 8 | 12 | 14 | 26 | DO3 |
| | | 10.0 | 3.05 | 11.5 | 3.51 | ST-1 | ST | 18 | | | | | Pocket Penetrometer 4.25 TSF |
| | | 11.5 | 3.51 | 13.0 | 3.96 | S-5 | SS | 16 | 8 | 9 | 11 | 20 | DO3, (Decomposed Sandstone) |
| | | 13.0 | 3.96 | 18.5 | 5.64 | | A | | | | | | |
| | | 18.5 | 5.64 | 20.0 | 6.10 | S-6 | SS | 18 | 9 | 14 | 16 | 30 | DO5 |

REMARKS: Continued On Page 2.
BORING RE-LOCATED 10 METERS SOUTH ON LINE WITH ORIGINAL LOCATION

amec foster wheeler — GEOTECHNICAL BRANCH, NASHVILLE, TENNESSEE

LOG OF BORING B-40, SHEET 3 OF 3

PROJECT: ALCOA HIGHWAY WIDENING (SR-115) RETAINING WALLS 7 AND 8 — DRILLER: TRI-STATE DRILLING
PROJECT NO.: 7681-15-002 — ON-SITE REP.: WDS
BORING NO. / LOCATION: STA 5+769, 23 m Left — DRY ON COMPLETION ?: YES
DATE: September 3, 2015 — SURFACE ELEV.: 937.8 FT. 285.8 M
REFUSAL: DEPTH NA FT. M — ELEV. FT. M
SAMPLED: 55.0 FT. 16.8 M
TOP OF ROCK: DEPTH NA FT. M — ELEV. FT. M
BEGAN CORING: DEPTH NA FT. M — ELEV. FT. M
FOOTAGE CORED (LF): 0.0 FT. 0.0 M
BOTTOM OF HOLE: DEPTH 55.0 FT. 16.8 M — ELEV. 882.8 FT. 269.1 M
BORING ADVANCED BY: — POWER AUGERING: X — WASHBORING:

WATER LEVEL DATA (IF APPLICABLE): COMPLETION: DEPTH FT. M, ELEV. FT. M; AFTER 24 HRS.: DEPTH FT. M, ELEV. FT. M; LDW AT: DEPTH FT. M, ELEV. FT. M

| STRATUM DEPTH FT. | STRATUM DEPTH M. | SAMPLE DEPTH FROM FT. | SAMPLE DEPTH FROM M. | SAMPLE DEPTH TO FT. | SAMPLE DEPTH TO M. | SAMPLE OR RUN NO. | SAMPLE TYPE | SPLE/CORE RECOV'D (IN.) | SPT VALUES 6" | 6" | 6" | N | DESCRIPTION |
|---|---|---|---|---|---|---|---|---|---|---|---|---|---|
| 42.5 | 12.95 | 40.0 | 12.19 | 43.5 | 13.26 | | A | | | | | | |
| 45.0 | 13.72 | 43.5 | 13.26 | 45.0 | 13.72 | S-11 | SS | 18 | 11 | 14 | 15 | 29 | DO10 |
| 47.5 | 14.48 | 45.0 | 13.72 | 48.5 | 14.78 | | A | | | | | | |
| 50.0 | 15.24 | 48.5 | 14.78 | 50.0 | 15.24 | S-12 | SS | 18 | 14 | 19 | 20 | 39 | DO10, Dense |
| 52.5 | 16.00 | 50.0 | 15.24 | 53.5 | 16.31 | | A | | | | | | |
| 55.0 | 16.76 | 53.5 | 16.31 | 55.0 | 16.76 | S-13 | SS | 18 | 9 | 15 | 20 | 35 | DO12 |
| 57.5 | 17.53 | | | | | | | | | | | | BORING TERMINATED @ 55.0' DRY ON COMPLETION |
| 60.0 | 18.29 | | | | | | | | | | | | |

REMARKS: BORING RE-LOCATED 10 METERS SOUTH ON LINE WITH ORIGINAL LOCATION

amec foster wheeler — GEOTECHNICAL BRANCH, NASHVILLE, TENNESSEE

LOG OF BORING B-39, SHEET 1 OF 3

PROJECT: ALCOA HIGHWAY WIDENING (SR-115) RETAINING WALLS 7 AND 8 — DRILLER: TRI-STATE DRILLING
PROJECT NO.: 7681-15-002 — ON-SITE REP.: WDS
BORING NO. / LOCATION: STA 5+740, 23 m Left — DRY ON COMPLETION ?: YES
DATE: September 2, 2015 — SURFACE ELEV.: 933.3 FT. 284.5 M
REFUSAL: DEPTH NA FT. M — ELEV. FT. M
SAMPLED: 55.0 FT. 16.8 M
TOP OF ROCK: DEPTH NA FT. M — ELEV. FT. M
BEGAN CORING: DEPTH NA FT. M — ELEV. FT. M
FOOTAGE CORED (LF): 0.0 FT. 0.0 M
BOTTOM OF HOLE: DEPTH 55.0 FT. 16.8 M — ELEV. 878.3 FT. 267.7 M
BORING ADVANCED BY: — POWER AUGERING: X — WASHBORING:

WATER LEVEL DATA (IF APPLICABLE): COMPLETION: DEPTH FT. M, ELEV. FT. M; AFTER 24 HRS.: DEPTH FT. M, ELEV. FT. M; LDW AT: DEPTH FT. M, ELEV. FT. M

| STRATUM DEPTH FT. | STRATUM DEPTH M. | SAMPLE DEPTH FROM FT. | SAMPLE DEPTH FROM M. | SAMPLE DEPTH TO FT. | SAMPLE DEPTH TO M. | SAMPLE OR RUN NO. | SAMPLE TYPE | SPLE/CORE RECOV'D (IN.) | SPT VALUES 6" | 6" | 6" | N | STRATUM DESCRIPTION |
|---|---|---|---|---|---|---|---|---|---|---|---|---|---|
| 2.5 | 0.76 | 0.0 | 0.00 | 1.0 | 0.30 | | A | | | | | | |
| 5.0 | 1.52 | 1.0 | 0.30 | 2.5 | 0.76 | S-1 | SS | 10 | 11 | 14 | 22 | 36 | Clay, silty, sandy, reddish-brown (moist)(Hard) |
| 7.5 | 2.29 | 2.5 | 0.76 | 3.5 | 1.07 | | A | | | | | | |
| 10.0 | 3.05 | 3.5 | 1.07 | 5.0 | 1.52 | S-2 | SS | 12 | 14 | 28 | 28 | 56 | DO1, mottled reddish-brown/ yellowish-brown |
| 12.5 | 3.81 | 5.0 | 1.52 | 6.0 | 1.83 | | A | | | | | | |
| 15.0 | 4.57 | 6.0 | 1.83 | 7.5 | 2.29 | S-3 | SS | 18 | 11 | 19 | 20 | 39 | DO2 |
| 17.5 | 5.33 | 7.5 | 2.29 | 8.5 | 2.59 | | A | | | | | | |
| 20.0 | 6.10 | 8.5 | 2.59 | 10.0 | 3.05 | S-4 | SS | 14 | 7 | 8 | 14 | 22 | Silt, sandy, clayey, yellowish-brown (moist)(Very Stiff) |
| | | 10.0 | 3.05 | 11.5 | 3.51 | ST-1 | ST | REC 18 | | | | | Pocket Penetrometer 3.0 TSF |
| | | 11.5 | 3.51 | 13.0 | 3.96 | S-5 | SS | 18 | 10 | 12 | 13 | 25 | DO4 |
| | | 13.0 | 3.96 | 18.5 | 5.64 | | A | | | | | | |
| | | 18.5 | 5.64 | 20.0 | 6.10 | S-6 | SS | 18 | 9 | 15 | 16 | 31 | Sand (F-M), silty, yellowish-brown/ dark brown (moist)(Dense)(Decomposed Sandstone) |

REMARKS: Continued On Page 2.

amec foster wheeler — GEOTECHNICAL BRANCH, NASHVILLE, TENNESSEE

LOG OF BORING B-39, SHEET 3 OF 3

PROJECT: ALCOA HIGHWAY WIDENING (SR-115) RETAINING WALLS 7 AND 8 — DRILLER: TRI-STATE DRILLING
PROJECT NO.: 7681-15-002 — ON-SITE REP.: WDS
BORING NO. / LOCATION: STA 5+740, 23 m Left — DRY ON COMPLETION ?: YES
DATE: September 2, 2015 — SURFACE ELEV.: 933.3 FT. 284.5 M
REFUSAL: DEPTH NA FT. M — ELEV. FT. M
SAMPLED: 55.0 FT. 16.8 M
TOP OF ROCK: DEPTH NA FT. M — ELEV. FT. M
BEGAN CORING: DEPTH NA FT. M — ELEV. FT. M
FOOTAGE CORED (LF): 0.0 FT. 0.0 M
BOTTOM OF HOLE: DEPTH 55.0 FT. 16.8 M — ELEV. 878.3 FT. 267.7 M
BORING ADVANCED BY: — POWER AUGERING: X — WASHBORING:

WATER LEVEL DATA (IF APPLICABLE): COMPLETION: DEPTH FT. M, ELEV. FT. M; AFTER 24 HRS.: DEPTH FT. M, ELEV. FT. M; LDW AT: DEPTH FT. M, ELEV. FT. M

| STRATUM DEPTH FT. | STRATUM DEPTH M. | SAMPLE DEPTH FROM FT. | SAMPLE DEPTH FROM M. | SAMPLE DEPTH TO FT. | SAMPLE DEPTH TO M. | SAMPLE OR RUN NO. | SAMPLE TYPE | SPLE/CORE RECOV'D (IN.) | SPT VALUES 6" | 6" | 6" | N | DESCRIPTION |
|---|---|---|---|---|---|---|---|---|---|---|---|---|---|
| | | | | | | | A | | | | | | DO8 con't |
| 42.5 | 12.95 | 40.0 | 12.19 | 43.5 | 13.26 | | A | | | | | | |
| 45.0 | 13.72 | 43.5 | 13.26 | 45.0 | 13.72 | S-11 | SS | 18 | 7 | 9 | 11 | 20 | Sand (F-M), silty, dark brown/ yellowish-brown (moist)(Medium Dense)(Decomposed Sandstone) |
| 47.5 | 14.48 | 45.0 | 13.72 | 48.5 | 14.78 | | A | | | | | | |
| 50.0 | 15.24 | 48.5 | 14.78 | 50.0 | 15.24 | S-12 | SS | 18 | 8 | 11 | 11 | 22 | DO11 |
| 52.5 | 16.00 | 50.0 | 15.24 | 53.5 | 16.31 | | A | | | | | | |
| 55.0 | 16.76 | 53.5 | 16.31 | 55.0 | 16.76 | S-13 | SS | 18 | 13 | 20 | 25 | 45 | DO11, (Dense) |
| 57.5 | 17.53 | | | | | | | | | | | | BORING TERMINATED @ 55.0' DRY ON COMPLETION |
| 60.0 | 18.29 | | | | | | | | | | | | |

REMARKS:

amec foster wheeler — GEOTECHNICAL BRANCH, NASHVILLE, TENNESSEE

LOG OF BORING B-40, SHEET 2 OF 3

PROJECT: ALCOA HIGHWAY WIDENING (SR-115) RETAINING WALLS 7 AND 8 — DRILLER: TRI-STATE DRILLING
PROJECT NO.: 7681-15-002 — ON-SITE REP.: WDS
BORING NO. / LOCATION: STA 5+769, 23 m Left — DRY ON COMPLETION ?: YES
DATE: September 3, 2015 — SURFACE ELEV.: 937.8 FT. 285.8 M
REFUSAL: DEPTH NA FT. M — ELEV. FT. M
SAMPLED: 55.0 FT. 16.8 M
TOP OF ROCK: DEPTH NA FT. M — ELEV. FT. M
BEGAN CORING: DEPTH NA FT. M — ELEV. FT. M
FOOTAGE CORED (LF): 0.0 FT. 0.0 M
BOTTOM OF HOLE: DEPTH 55.0 FT. 16.8 M — ELEV. 882.8 FT. 269.1 M
BORING ADVANCED BY: — POWER AUGERING: X — WASHBORING:

WATER LEVEL DATA (IF APPLICABLE): COMPLETION: DEPTH FT. M, ELEV. FT. M; AFTER 24 HRS.: DEPTH FT. M, ELEV. FT. M; LDW AT: DEPTH FT. M, ELEV. FT. M

| STRATUM DEPTH FT. | STRATUM DEPTH M. | SAMPLE DEPTH FROM FT. | SAMPLE DEPTH FROM M. | SAMPLE DEPTH TO FT. | SAMPLE DEPTH TO M. | SAMPLE OR RUN NO. | SAMPLE TYPE | SPLE/CORE RECOV'D (IN.) | SPT VALUES 6" | 6" | 6" | N | DESCRIPTION |
|---|---|---|---|---|---|---|---|---|---|---|---|---|---|
| 22.5 | 6.86 | 20.0 | 6.10 | 23.5 | 7.16 | | A | | | | | | |
| 25.0 | 7.62 | 23.5 | 7.163 | 25.0 | 7.62 | S-7 | SS | 18 | 9 | 14 | 25 | 39 | DO5, Dense |
| 27.5 | 8.38 | 25.0 | 7.62 | 28.5 | 8.69 | | A | | | | | | |
| 30.0 | 9.14 | 28.5 | 8.687 | 30.0 | 9.14 | S-8 | SS | 18 | 9 | 14 | 21 | 35 | DO7 |
| 32.5 | 9.91 | 30.0 | 9.144 | 33.5 | 10.21 | | A | | | | | | |
| 35.0 | 10.67 | 33.5 | 10.21 | 35.0 | 10.67 | S-9 | SS | 19 | 9 | 14 | 17 | 31 | DO7 |
| 37.5 | 11.43 | 35.0 | 10.67 | 38.5 | 11.73 | | A | | | | | | |
| 40.0 | 12.19 | 38.5 | 11.73 | 40.0 | 12.19 | S-10 | SS | 18 | 3 | 10 | 14 | 24 | Sand (F-M), silty, yellowish-brown/ brown (moist)(Medium Dense)(Decomposed Sandstone) |

REMARKS: Continued On Page 3.
BORING RE-LOCATED 10 METERS SOUTH ON LINE WITH ORIGINAL LOCATION

amec foster wheeler — GEOTECHNICAL BRANCH, NASHVILLE, TENNESSEE

LOG OF BORING B-41, SHEET 1 OF 3

PROJECT: ALCOA HIGHWAY WIDENING (SR-115) RETAINING WALLS 7 AND 8 — DRILLER: TRI-STATE DRILLING
PROJECT NO.: 7681-15-002 — ON-SITE REP.: WDS
BORING NO. / LOCATION: STA 5-806, 23.0 m Left — DRY ON COMPLETION ?: YES
DATE: July 23, 2015 — SURFACE ELEV.: 943.7 FT. 287.6 M
REFUSAL: DEPTH NA FT. M — ELEV. FT. M
SAMPLED: 0.0 FT. 0.0 M
TOP OF ROCK: DEPTH NA FT. M — ELEV. FT. M
BEGAN CORING: DEPTH NA FT. M — ELEV. FT. M
FOOTAGE CORED (LF): 0.0 FT. 0.0 M
BOTTOM OF HOLE: DEPTH 60.0 FT. 18.3 M — ELEV. 883.7 FT. 269.4 M
BORING ADVANCED BY: — POWER AUGERING: X — WASHBORING:

WATER LEVEL DATA (IF APPLICABLE): COMPLETION: DEPTH FT. M, ELEV. FT. M; AFTER 24 HRS.: DEPTH FT. M, ELEV. FT. M; LDW AT: DEPTH FT. M, ELEV. FT. M

| STRATUM DEPTH FT. | STRATUM DEPTH M. | SAMPLE DEPTH FROM FT. | SAMPLE DEPTH FROM M. | SAMPLE DEPTH TO FT. | SAMPLE DEPTH TO M. | SAMPLE OR RUN NO. | SAMPLE TYPE | SPLE/CORE RECOV'D (IN.) | SPT VALUES 6" | 6" | 6" | N | STRATUM DESCRIPTION |
|---|---|---|---|---|---|---|---|---|---|---|---|---|---|
| 2.5 | 0.76 | 0.0 | 0.00 | 1.0 | 0.30 | | A | | | | | | |
| 5.0 | 1.52 | 1.0 | 0.30 | 2.5 | 0.76 | S-1 | SS | 16 | 3 | 3 | 4 | 7 | Clay, sandy, silty, reddish-brown (Moist)(Medium Stiff) |
| 7.5 | 2.29 | 2.5 | 0.76 | 3.5 | 1.07 | | A | | | | | | |
| 10.0 | 3.05 | 3.5 | 1.07 | 5.0 | 1.52 | S-2 | SS | 16 | 4 | 6 | 7 | 13 | DO1 (Stiff) |
| 12.5 | 3.81 | 5.0 | 1.52 | 6.0 | 1.83 | | A | | | | | | |
| 15.0 | 4.57 | 6.0 | 1.83 | 7.5 | 2.29 | S-3 | SS | 16 | 4 | 4 | 9 | 13 | DO2 |
| 17.5 | 5.33 | 7.5 | 2.29 | 8.5 | 2.59 | | A | | | | | | |
| 20.0 | 6.10 | 8.5 | 2.59 | 10.0 | 3.05 | S-4 | SS | 14 | 5 | 5 | 6 | 11 | DO2 |
| | | 10.0 | 3.05 | 12.0 | 3.66 | ST-1 | ST | 24 | | | | | Pocket Penetrometer 4.5 TSF |
| | | 12.0 | 3.66 | 13.5 | 4.11 | S-5 | SS | 14 | 4 | 6 | 7 | 13 | Sand (M-F), silty, clayey, reddish-brown (Moist)(Medium Dense) |
| | | 13.5 | 4.11 | 18.5 | 5.64 | | A | | | | | | |
| | | 18.5 | 5.64 | 20.0 | 6.10 | S-6 | SS | 16 | 4 | 4 | 5 | 9 | Clay, very sandy, very silty, yellowish-brown/reddish-brown (Moist)(Stiff) |

REMARKS: Continued On Page 2.

CONTRACTOR NOTES:

1. THE GEOTECHNICAL REPORT WHICH INCLUDES DETAILED BORING RECORDS, SOIL AND ROCK TESTING DATA IS AVAILABLE UPON REQUEST. ROCK CORE SAMPLES ARE AVAILABLE FOR INSPECTION BY THE CONTRACTOR.

2. IT IS THE RESPONSIBILITY OF THE CONTRACTOR TO REVIEW THE PLANS, GEOTECHNICAL REPORT, AND BORING LOGS TO BECOME FAMILIAR WITH THE SUBSURFACE CONDITIONS PERTINENT TO THE ASSOCIATED WORK TO BE CONDUCTED BY THE CONTRACTOR. THE CONTRACTOR SHOULD ALSO CONSIDER THEIR EXPERIENCE IN THE PROJECT'S GEOLOGIC AND SUBSURFACE SETTING AND THEIR EXPERIENCE IN DEALING WITH VARIABLE SUBSURFACE CONDITIONS ACROSS A PROJECT SITE TO BASE THEIR BID UPON AND DECISIONS REGARDING APPROPRIATE EQUIPMENT TO BE UTILIZED.

PRELIMINARY PLANS

SEALED BY

TENNESSEE METRIC D.O.T.

COORDINATES ARE NAD/83(1995), ARE DATUM ADJUSTED BY THE FACTOR OF 1.000 AND TIED TO THE TGRN. ALL ELEVATIONS ARE REFERENCED TO THE NAVD 1988.

STATE OF TENNESSEE
DEPARTMENT OF TRANSPORTATION

SOIL BORING LOGS
RETAINING WALLS
NO. 7 AND 8

SCALE: AS NOTED

9/9/2015
R:_Infrastructure Project Files\2015 Infra Projects\7681-15-002 ALCOA Hwy (SR 115) WALLS 7 AND 8\06 - CADD\03-23-RETAINING WALL NO. 7 AND 8 SOIL BORING LOGS.SHT

| TYPE | YEAR | PROJECT NO. | SHEET NO. |
|---|---|---|---|
| CONST. | 2015 | 47026-3279-14 | ---- |

amec foster wheeler — GEOTECHNICAL BRANCH, NASHVILLE, TENNESSEE

LOG OF BORING B-41, SHEET 2 OF 3

PROJECT: ALCOA HIGHWAY WIDENING (SR-115) RETAINING WALLS 7 AND 8 — DRILLER: TRI-STATE DRILLING
PROJECT NO.: 7681-15-002 — ON-SITE REP.: WDS
BORING NO. / LOCATION: STA 5-806, 23.0 m Left — DRY ON COMPLETION ?: YES
DATE: July 23, 2015 — SURFACE ELEV.: 943.7 FT. 287.6 M
REFUSAL: DEPTH NA FT. M — ELEV. FT. M
SAMPLED 0.0 FT. 0.0 M
TOP OF ROCK: DEPTH NA FT. M — ELEV. FT. M
BEGAN CORING: DEPTH NA FT. M — ELEV. FT. M
FOOTAGE CORED (LF): 0.0 FT. 0.0 M
BOTTOM OF HOLE: DEPTH 60.0 FT. 18.3 M — ELEV. 883.7 FT. 269.4 M
BORING ADVANCED BY: — POWER AUGERING X — WASHBORING

WATER LEVEL DATA (IF APPLICABLE): COMPLETION: DEPTH FT. M, ELEV. FT. M; AFTER 24 HRS.: DEPTH FT. M, ELEV. FT. M; LDW AT: DEPTH FT. M, ELEV. FT. M

| STRATUM DEPTH FT. | STRATUM DEPTH M. | SAMPLE DEPTH FROM FT. | SAMPLE DEPTH FROM M. | SAMPLE DEPTH TO FT. | SAMPLE DEPTH TO M. | SAMPLE OR RUN NO. | SAMPLE TYPE | SPLE/CORE RECOV'D (IN.) | SPT VALUES 6" | 6" | 6" | N | DESCRIPTION |
|---|---|---|---|---|---|---|---|---|---|---|---|---|---|
| | | 20.0 | 6.10 | | | | | | | | | | DO6 |
| | 22.5 | | | | 6.86 | | A | | | | | | |
| | | 23.5 | 7.163 | 23.5 | 7.16 | | | | | | | | |
| | 25.0 | 25.0 | 7.62 | 25.0 | 7.62 | S-7 | SS | 18 | 4 | 4 | 5 | 9 | Sand (F-M), silty, dark brown mottled yellowish-brown (Moist)(Loose) |
| | 27.5 | | | | 8.38 | | A | | | | | | |
| | | 28.5 | 8.687 | 28.5 | 8.69 | | | | | | | | |
| | 30.0 | 30.0 | 9.144 | 30.0 | 9.14 | S-8 | SS | 16 | 8 | 8 | 12 | 20 | DO7 (Moist)(Medium Dense) |
| | 32.5 | | | | 9.91 | | A | | | | | | |
| | | 33.5 | 10.21 | 33.5 | 10.21 | | | | | | | | |
| | 35.0 | 35.0 | 10.67 | 35.0 | 10.67 | S-9 | SS | 14 | 5 | 6 | 8 | 14 | Clay, very silty, sandy, yellowish-brown mottled brown/reddish-brown (Moist)(Stiff) (Decomposed Siltstone/ Sandstone) |
| | 37.5 | | | | 11.43 | | A | | | | | | |
| | | 38.5 | 11.73 | 38.5 | 11.73 | | | | | | | | |
| | 40.0 | | | 40.0 | 12.19 | S-10 | SS | 16 | 4 | 6 | 5 | 11 | Sand (F-M), silty, clayey, dark brown mottled yellowish-brown (Moist)(Medium Dense) (Decomposed Sandstone/ Siltstone) |

REMARKS: Continued On Page 3.

amec foster wheeler — GEOTECHNICAL BRANCH, NASHVILLE, TENNESSEE

LOG OF BORING B-42, SHEET 1 OF 4

PROJECT: ALCOA HIGHWAY WIDENING (SR-115) RETAINING WALLS 7 AND 8 — DRILLER: TRI-STATE DRILLING
PROJECT NO.: 7681-15-002 — ON-SITE REP.: WDS
BORING NO. / LOCATION: STA 5+830, 22.5 m Left — DRY ON COMPLETION ?: YES
DATE: 7/23/2015 TO 7/24/2015 — SURFACE ELEV.: 943.7 FT. 287.6 M
REFUSAL: DEPTH NA FT. M — ELEV. FT. M
SAMPLED 75.0 FT. 22.9 M
TOP OF ROCK: DEPTH NA FT. M — ELEV. FT. M
BEGAN CORING: DEPTH NA FT. M — ELEV. FT. M
FOOTAGE CORED (LF): 0.0 FT. 0.0 M
BOTTOM OF HOLE: DEPTH 75.0 FT. 22.9 M — ELEV. 868.7 FT. 264.8 M
BORING ADVANCED BY: — POWER AUGERING X — WASHBORING

WATER LEVEL DATA (IF APPLICABLE): COMPLETION: DEPTH FT. M, ELEV. FT. M; AFTER 24 HRS.: DEPTH FT. M, ELEV. FT. M; LDW AT: DEPTH FT. M, ELEV. FT. M

| STRATUM DEPTH FT. | STRATUM DEPTH M. | SAMPLE DEPTH FROM FT. | SAMPLE DEPTH FROM M. | SAMPLE DEPTH TO FT. | SAMPLE DEPTH TO M. | SAMPLE OR RUN NO. | SAMPLE TYPE | SPLE/CORE RECOV'D (IN.) | SPT VALUES 6" | 6" | 6" | N | STRATUM DESCRIPTION |
|---|---|---|---|---|---|---|---|---|---|---|---|---|---|
| | | 0.0 | 0.00 | | | | A | | | | | | |
| | | 1.0 | 0.30 | 1.0 | 0.30 | | | | | | | | |
| | 2.5 | | 0.76 | | 0.76 | S-1 | SS | 16 | 4 | 4 | 5 | 9 | Clay, sandy, silty, reddish-brown (Moist)(Stiff) |
| | | 2.5 | 0.76 | | | | A | | | | | | |
| | | 3.5 | 1.07 | 3.5 | 1.07 | | | | | | | | |
| | 5.0 | | 1.52 | | 1.52 | S-2 | SS | 14 | 4 | 5 | 6 | 11 | DO1 |
| | | 5.0 | 1.52 | 5.0 | 1.52 | | A | | | | | | |
| | | 6.0 | 1.83 | 6.0 | 1.83 | | | | | | | | |
| | 7.5 | | 2.29 | | 2.29 | S-3 | SS | 14 | 3 | 6 | 8 | 14 | DO1 |
| | | 7.5 | 2.29 | 7.5 | 2.29 | | A | | | | | | |
| | | 8.5 | 2.59 | 8.5 | 2.59 | | | | | | | | |
| | 10.0 | | 3.05 | | 3.05 | S-4 | SS | 12 | 3 | 6 | 7 | 13 | DO1 |
| | | 10.0 | 3.05 | 10.0 | 3.05 | ST-1 | ST | 24 | | | | | Pocket Penetrometer 4.0 TSF |
| | | | | 12.0 | 3.66 | | | | | | | | |
| | 12.5 | 12.0 | 3.66 | | 3.81 | S-5 | SS | 14 | 4 | 6 | 11 | 17 | DO1 (Very Stiff) |
| | | 13.5 | 4.11 | 13.5 | 4.11 | | | | | | | | |
| | 15.0 | | 4.57 | | | | A | | | | | | |
| | 17.5 | | 5.33 | | | | | | | | | | |
| | | 18.5 | 5.64 | 18.5 | 5.64 | | | | | | | | |
| | 20.0 | 20.0 | 6.10 | 20.0 | 6.10 | S-6 | SS | 16 | 4 | 6 | 7 | 13 | Sand (M-F), silty, reddish-brown/ yellowish-brown (Moist)(Medium Dense)(Decomposed Sandstone/ Siltstone) |

REMARKS: Continued On Page 2.

amec foster wheeler — GEOTECHNICAL BRANCH, NASHVILLE, TENNESSEE

LOG OF BORING B-42, SHEET 3 OF 4

PROJECT: ALCOA HIGHWAY WIDENING (SR-115) RETAINING WALLS 7 AND 8 — DRILLER: TRI-STATE DRILLING
PROJECT NO.: 7681-15-002 — ON-SITE REP.: WDS
BORING NO. / LOCATION: STA 5+830, 22.5 m Left — DRY ON COMPLETION ?: YES
DATE: 7/23/2015 TO 7/24/2015 — SURFACE ELEV.: 943.7 FT. 287.6 M
REFUSAL: DEPTH NA FT. M — ELEV. FT. M
SAMPLED 75.0 FT. 22.9 M
TOP OF ROCK: DEPTH NA FT. M — ELEV. FT. M
BEGAN CORING: DEPTH NA FT. M — ELEV. FT. M
FOOTAGE CORED (LF): 0.0 FT. 0.0 M
BOTTOM OF HOLE: DEPTH 75.0 FT. 22.9 M — ELEV. 868.7 FT. 264.8 M
BORING ADVANCED BY: — POWER AUGERING X — WASHBORING

WATER LEVEL DATA (IF APPLICABLE): COMPLETION: DEPTH FT. M, ELEV. FT. M; AFTER 24 HRS.: DEPTH FT. M, ELEV. FT. M; LDW AT: DEPTH FT. M, ELEV. FT. M

| STRATUM DEPTH FT. | STRATUM DEPTH M. | SAMPLE DEPTH FROM FT. | SAMPLE DEPTH FROM M. | SAMPLE DEPTH TO FT. | SAMPLE DEPTH TO M. | SAMPLE OR RUN NO. | SAMPLE TYPE | SPLE/CORE RECOV'D (IN.) | "SPT" VALUES 6" | 6" | 6" | N | DESCRIPTION |
|---|---|---|---|---|---|---|---|---|---|---|---|---|---|
| | | 40.0 | 12.19 | | | | | | | | | | |
| | 42.5 | | 12.95 | | | | A | | | | | | |
| | | 43.5 | 13.26 | 43.5 | 13.26 | | | | | | | | |
| | 45.0 | 45.0 | 13.72 | 45.0 | 13.72 | S-11 | SS | 16 | 5 | 6 | 8 | 14 | DO9 |
| | 47.5 | | 14.48 | | | | A | | | | | | |
| | | 48.5 | 14.78 | 48.5 | 14.78 | | | | | | | | |
| | 50.0 | 50.0 | 15.24 | 50.0 | 15.24 | S-12 | SS | 18 | 2 | 3 | 4 | 7 | DO11, (loose) |
| | 52.5 | | 16.00 | | | | A | | | | | | |
| | | 53.5 | 16.31 | 53.5 | 16.31 | | | | | | | | |
| | 55.0 | 55.0 | 16.76 | 55.0 | 16.76 | S-13 | SS | 16 | 5 | 7 | 8 | 15 | DO12 (Medium Dense) |
| | 57.5 | | 17.53 | | | | A | | | | | | |
| | | 58.5 | 17.83 | 58.5 | 17.83 | | | | | | | | |
| | 60.0 | | 18.29 | 60.0 | 18.29 | S-14 | SS | 16 | 6 | 9 | 7 | 16 | Clay, very silty, slightly sandy, yellowish-brown (moist)(Very Stiff)(Decomposed Siltstone) |

REMARKS: Continued On Page 4.

amec foster wheeler — GEOTECHNICAL BRANCH, NASHVILLE, TENNESSEE

LOG OF BORING B-43, SHEET 1 OF 4

PROJECT: ALCOA HIGHWAY WIDENING (SR-115) RETAINING WALLS 7 AND 8 — DRILLER: TRI-STATE DRILLING
PROJECT NO.: 7681-15-002 — ON-SITE REP.: WDS
BORING NO. / LOCATION: STA 5+860, 23.0 m Left — DRY ON COMPLETION ?: YES
DATE: July 24, 2015 — SURFACE ELEV.: 948.9 FT. 289.2 M
REFUSAL: DEPTH NA FT. M — ELEV. FT. M
SAMPLED 75.0 FT. 22.9 M
TOP OF ROCK: DEPTH NA FT. M — ELEV. FT. M
BEGAN CORING: DEPTH NA FT. M — ELEV. FT. M
FOOTAGE CORED (LF): 0.0 FT. 0.0 M
BOTTOM OF HOLE: DEPTH 75.0 FT. 22.9 M — ELEV. 873.9 FT. 266.4 M
BORING ADVANCED BY: — POWER AUGERING X — WASHBORING

WATER LEVEL DATA (IF APPLICABLE): COMPLETION: DEPTH FT. M, ELEV. FT. M; AFTER 24 HRS.: DEPTH FT. M, ELEV. FT. M; LDW AT: DEPTH FT. M, ELEV. FT. M

| STRATUM DEPTH FT. | STRATUM DEPTH M. | SAMPLE DEPTH FROM FT. | SAMPLE DEPTH FROM M. | SAMPLE DEPTH TO FT. | SAMPLE DEPTH TO M. | SAMPLE OR RUN NO. | SAMPLE TYPE | SPLE/CORE RECOV'D (IN.) | SPT VALUES 6" | 6" | 6" | N | STRATUM DESCRIPTION |
|---|---|---|---|---|---|---|---|---|---|---|---|---|---|
| | | 0.0 | 0.00 | | | | A | | | | | | Clay, sandy, silty, reddish-brown |
| | | 1.0 | 0.30 | 1.0 | 0.30 | | | | | | | | |
| | 2.5 | | 0.76 | | 0.76 | S-1 | SS | 14 | 3 | 4 | 5 | 9 | Clay, sandy, silty, reddish-brown (Moist)(Stiff) |
| | | 2.5 | 0.76 | | | | A | | | | | | |
| | | 3.5 | 1.07 | 3.5 | 1.07 | | | | | | | | |
| | 5.0 | | 1.52 | | 1.52 | S-2 | SS | 14 | 3 | 5 | 7 | 12 | DO1 |
| | | 5.0 | 1.52 | 5.0 | 1.52 | | A | | | | | | |
| | | 6.0 | 1.83 | 6.0 | 1.83 | | | | | | | | |
| | 7.5 | | 2.29 | | 2.29 | S-3 | SS | 16 | 5 | 7 | 8 | 15 | DO1 |
| | | 7.5 | 2.29 | 7.5 | 2.29 | | A | | | | | | |
| | | 8.5 | 2.59 | 8.5 | 2.59 | | | | | | | | |
| | 10.0 | | 3.05 | | 3.05 | S-4 | SS | 12 | 4 | 6 | 7 | 13 | Sand, silty, clayey, brown (Moist)(Medium Dense) |
| | | 10.0 | 3.05 | 10.0 | 3.05 | ST-1 | ST | 24 | | | | | Pocket Penetrometer 4.5 TSF |
| | | | | 12.0 | 3.66 | | | | | | | | |
| | 12.5 | 12.0 | 3.66 | | 3.81 | S-5 | SS | 12 | 4 | 3 | 3 | 6 | DO4 (Loose) |
| | | 13.5 | 4.11 | 13.5 | 4.11 | | | | | | | | |
| | 15.0 | | 4.57 | | | | A | | | | | | |
| | 17.5 | | 5.33 | | | | | | | | | | |
| | | 18.5 | 5.64 | 18.5 | 5.64 | | | | | | | | |
| | 20.0 | 20.0 | 6.10 | 20.0 | 6.10 | S-6 | SS | 16 | 4 | 6 | 8 | 14 | DO5 (Medium Dense) |

REMARKS: Continued On Page 2.

amec foster wheeler — GEOTECHNICAL BRANCH, NASHVILLE, TENNESSEE

LOG OF BORING B-41, SHEET 3 OF 3

PROJECT: ALCOA HIGHWAY WIDENING (SR-115) RETAINING WALLS 7 AND 8 — DRILLER: TRI-STATE DRILLING
PROJECT NO.: 7681-15-002 — ON-SITE REP.: WDS
BORING NO. / LOCATION: STA 5-806, 23.0 m Left — DRY ON COMPLETION ?: YES
DATE: July 23, 2015 — SURFACE ELEV.: 943.7 FT. 287.6 M
REFUSAL: DEPTH NA FT. M — ELEV. FT. M
SAMPLED 0.0 FT. 0.0 M
TOP OF ROCK: DEPTH NA FT. M — ELEV. FT. M
BEGAN CORING: DEPTH NA FT. M — ELEV. FT. M
FOOTAGE CORED (LF): 0.0 FT. 0.0 M
BOTTOM OF HOLE: DEPTH 60.0 FT. 18.3 M — ELEV. 883.7 FT. 269.4 M
BORING ADVANCED BY: — POWER AUGERING X — WASHBORING

WATER LEVEL DATA (IF APPLICABLE): COMPLETION: DEPTH FT. M, ELEV. FT. M; AFTER 24 HRS.: DEPTH FT. M, ELEV. FT. M; LDW AT: DEPTH FT. M, ELEV. FT. M

| STRATUM DEPTH FT. | STRATUM DEPTH M. | SAMPLE DEPTH FROM FT. | SAMPLE DEPTH FROM M. | SAMPLE DEPTH TO FT. | SAMPLE DEPTH TO M. | SAMPLE OR RUN NO. | SAMPLE TYPE | SPLE/CORE RECOV'D (IN.) | "SPT" VALUES 6" | 6" | 6" | N | DESCRIPTION |
|---|---|---|---|---|---|---|---|---|---|---|---|---|---|
| | | 40.0 | 12.19 | | | | | | | | | | |
| | 42.5 | | 12.95 | | | | A | | | | | | |
| | | 43.5 | 13.26 | 43.5 | 13.26 | | | | | | | | |
| | 45.0 | 45.0 | 13.72 | 45.0 | 13.72 | S-11 | SS | 18 | 2 | 3 | 4 | 7 | DO10, loose |
| | 47.5 | | 14.48 | | | | A | | | | | | |
| | | 48.5 | 14.78 | 48.5 | 14.78 | | | | | | | | |
| | 50.0 | 50.0 | 15.24 | 50.0 | 15.24 | S-12 | SS | 18 | 5 | 5 | 7 | 12 | DO10 |
| | 52.5 | | 16.00 | | | | A | | | | | | |
| | | 53.5 | 16.31 | 53.5 | 16.31 | | | | | | | | |
| | 55.0 | 55.0 | 16.76 | 55.0 | 16.76 | S-13 | SS | 18 | 6 | 11 | 14 | 25 | DO10 |
| | 57.5 | | 17.53 | | | | A | | | | | | |
| | | 58.5 | 17.83 | 58.5 | 17.83 | | | | | | | | |
| | 60.0 | | 18.29 | 60.0 | 18.29 | S-14 | SS | 18 | 3 | 4 | 5 | 9 | DO13 (wet)(Loose) (Decomposed Sandstone/ Siltstone) |

NO REFUSAL @ 60.0', DRY ON COMPLETION

REMARKS:

amec foster wheeler — GEOTECHNICAL BRANCH, NASHVILLE, TENNESSEE

LOG OF BORING B-42, SHEET 2 OF 4

PROJECT: ALCOA HIGHWAY WIDENING (SR-115) RETAINING WALLS 7 AND 8 — DRILLER: TRI-STATE DRILLING
PROJECT NO.: 7681-15-002 — ON-SITE REP.: WDS
BORING NO. / LOCATION: STA 5+830, 22.5 m Left — DRY ON COMPLETION ?: YES
DATE: 7/23/2015 TO 7/24/2015 — SURFACE ELEV.: 943.7 FT. 287.6 M
REFUSAL: DEPTH NA FT. M — ELEV. FT. M
SAMPLED 75.0 FT. 22.9 M
TOP OF ROCK: DEPTH NA FT. M — ELEV. FT. M
BEGAN CORING: DEPTH NA FT. M — ELEV. FT. M
FOOTAGE CORED (LF): 0.0 FT. 0.0 M
BOTTOM OF HOLE: DEPTH 75.0 FT. 22.9 M — ELEV. 868.7 FT. 264.8 M
BORING ADVANCED BY: — POWER AUGERING X — WASHBORING

WATER LEVEL DATA (IF APPLICABLE): COMPLETION: DEPTH FT. M, ELEV. FT. M; AFTER 24 HRS.: DEPTH FT. M, ELEV. FT. M; LDW AT: DEPTH FT. M, ELEV. FT. M

| STRATUM DEPTH FT. | STRATUM DEPTH M. | SAMPLE DEPTH FROM FT. | SAMPLE DEPTH FROM M. | SAMPLE DEPTH TO FT. | SAMPLE DEPTH TO M. | SAMPLE OR RUN NO. | SAMPLE TYPE | SPLE/CORE RECOV'D (IN.) | SPT VALUES 6" | 6" | 6" | N | DESCRIPTION |
|---|---|---|---|---|---|---|---|---|---|---|---|---|---|
| | | 20.0 | 6.10 | | | | A | | | | | | |
| | 22.5 | | 6.86 | | | | | | | | | | |
| | | 23.5 | 7.163 | 23.5 | 7.16 | | | | | | | | |
| | 25.0 | 25.0 | 7.62 | 25.0 | 7.62 | S-7 | SS | 16 | 3 | 4 | 5 | 9 | Sand (M-F), silty, reddish-brown (moist)(Loose)(Decomposed Sandstone) |
| | 27.5 | | 8.38 | | | | A | | | | | | |
| | | 28.5 | 8.687 | 28.5 | 8.69 | | | | | | | | |
| | 30.0 | 30.0 | 9.144 | 30.0 | 9.14 | S-8 | SS | 18 | 2 | 3 | 5 | 8 | DO7 yellowish-brown |
| | 32.5 | | 9.91 | | | | A | | | | | | |
| | | 33.5 | 10.21 | 33.5 | 10.21 | | | | | | | | |
| | 35.0 | 35.0 | 10.67 | 35.0 | 10.67 | S-9 | SS | 16 | 4 | 5 | 6 | 11 | DO8, (Medium Dense) |
| | 37.5 | | 11.43 | | | | A | | | | | | |
| | | 38.5 | 11.73 | 38.5 | 11.73 | | | | | | | | |
| | 40.0 | | 12.19 | 40.0 | 12.19 | S-10 | SS | 16 | 5 | 6 | 6 | 12 | DO9 |

REMARKS: Continued On Page 3.

amec foster wheeler — GEOTECHNICAL BRANCH, NASHVILLE, TENNESSEE

LOG OF BORING B-42, SHEET 4 OF 4

PROJECT: ALCOA HIGHWAY WIDENING (SR-115) RETAINING WALLS 7 AND 8 — DRILLER: TRI-STATE DRILLING
PROJECT NO.: 7681-15-002 — ON-SITE REP.: WDS
BORING NO. / LOCATION: STA 5+830, 22.5 m Left — DRY ON COMPLETION ?: YES
DATE: 7/23/2015 TO 7/24/2015 — SURFACE ELEV.: 943.7 FT. 287.6 M
REFUSAL: DEPTH NA FT. M — ELEV. FT. M
SAMPLED 75.0 FT. 22.9 M
TOP OF ROCK: DEPTH NA FT. M — ELEV. FT. M
BEGAN CORING: DEPTH NA FT. M — ELEV. FT. M
FOOTAGE CORED (LF): 0.0 FT. 0.0 M
BOTTOM OF HOLE: DEPTH 75.0 FT. 22.9 M — ELEV. 868.7 FT. 264.8 M
BORING ADVANCED BY: — POWER AUGERING X — WASHBORING

WATER LEVEL DATA (IF APPLICABLE): COMPLETION: DEPTH FT. M, ELEV. FT. M; AFTER 24 HRS.: DEPTH FT. M, ELEV. FT. M; LDW AT: DEPTH FT. M, ELEV. FT. M

| STRATUM DEPTH FT. | STRATUM DEPTH M. | SAMPLE DEPTH FROM FT. | SAMPLE DEPTH FROM M. | SAMPLE DEPTH TO FT. | SAMPLE DEPTH TO M. | SAMPLE OR RUN NO. | SAMPLE TYPE | SPLE/CORE RECOV'D (IN.) | "SPT" VALUES 6" | 6" | 6" | N | DESCRIPTION |
|---|---|---|---|---|---|---|---|---|---|---|---|---|---|
| | | 60.0 | 18.29 | | | | | | | | | | |
| | 62.5 | | 19.05 | | | | A | | | | | | |
| | | 63.5 | 19.35 | 63.5 | 19.35 | | | | | | | | |
| | 65.0 | 65.0 | 19.81 | 65.0 | 19.81 | S-15 | SS | 16 | 4 | 5 | 5 | 10 | Sand (M-F), silty, dark brown (Moist)(Loose)(Decomposed Sandstone) |
| | 67.5 | | 20.57 | | | | A | | | | | | |
| | | 68.5 | 20.88 | 68.5 | 20.88 | | | | | | | | |
| | 70.0 | 70.0 | 21.34 | 70.0 | 21.34 | S-16 | SS | 18 | 2 | 2 | 3 | 5 | DO15 (wet) |
| | 72.5 | | 22.10 | | | | A | | | | | | |
| | | 73.5 | 22.4 | 73.5 | 22.40 | | | | | | | | |
| | 75.0 | | | 75.0 | 22.86 | S-17 | SS | 18 | 3 | 5 | 6 | 11 | DO15, (Medium Dense) |
| | 77.5 | | 23.62 | | | | | | | | | | |
| | 80.0 | | 24.38 | | | | | | | | | | |

NO REFUSAL @ 75.0
DRY ON COMPLETION

REMARKS:

amec foster wheeler — GEOTECHNICAL BRANCH, NASHVILLE, TENNESSEE

LOG OF BORING B-43, SHEET 2 OF 4

PROJECT: ALCOA HIGHWAY WIDENING (SR-115) RETAINING WALLS 7 AND 8 — DRILLER: TRI-STATE DRILLING
PROJECT NO.: 7681-15-002 — ON-SITE REP.: WDS
BORING NO. / LOCATION: STA 5+860, 23.0 m Left — DRY ON COMPLETION ?: YES
DATE: July 24, 2015 — SURFACE ELEV.: 948.9 FT. 289.2 M
REFUSAL: DEPTH NA FT. M — ELEV. FT. M
SAMPLED 75.0 FT. 22.9 M
TOP OF ROCK: DEPTH NA FT. M — ELEV. FT. M
BEGAN CORING: DEPTH NA FT. M — ELEV. FT. M
FOOTAGE CORED (LF): 0.0 FT. 0.0 M
BOTTOM OF HOLE: DEPTH 75.0 FT. 22.9 M — ELEV. 873.9 FT. 266.4 M
BORING ADVANCED BY: — POWER AUGERING X — WASHBORING

WATER LEVEL DATA (IF APPLICABLE): COMPLETION: DEPTH FT. M, ELEV. FT. M; AFTER 24 HRS.: DEPTH FT. M, ELEV. FT. M; LDW AT: DEPTH FT. M, ELEV. FT. M

| STRATUM DEPTH FT. | STRATUM DEPTH M. | SAMPLE DEPTH FROM FT. | SAMPLE DEPTH FROM M. | SAMPLE DEPTH TO FT. | SAMPLE DEPTH TO M. | SAMPLE OR RUN NO. | SAMPLE TYPE | SPLE/CORE RECOV'D (IN.) | SPT VALUES 6" | 6" | 6" | N | DESCRIPTION |
|---|---|---|---|---|---|---|---|---|---|---|---|---|---|
| | | 20.0 | 6.10 | | | | A | | | | | | |
| | 22.5 | | 6.86 | | | | | | | | | | |
| | | 23.5 | 7.163 | 23.5 | 7.16 | | | | | | | | |
| | 25.0 | 25.0 | 7.62 | 25.0 | 7.62 | S-7 | SS | 14 | 2 | 3 | 3 | 6 | DO5 (Loose) |
| | 27.5 | | 8.38 | | | | A | | | | | | |
| | | 28.5 | 8.687 | 28.5 | 8.69 | | | | | | | | |
| | 30.0 | 30.0 | 9.144 | 30.0 | 9.14 | S-8 | SS | 16 | 3 | 5 | 5 | 10 | DO7 |
| | 32.5 | | 9.91 | | | | A | | | | | | |
| | | 33.5 | 10.21 | 33.5 | 10.21 | | | | | | | | |
| | 35.0 | 35.0 | 10.67 | 35.0 | 10.67 | S-9 | SS | 16 | 2 | 3 | 4 | 7 | DO7 (Decomposed Sandstone) |
| | 37.5 | | 11.43 | | | | A | | | | | | |
| | | 38.5 | 11.73 | 38.5 | 11.73 | | | | | | | | |
| | 40.0 | | 12.19 | 40.0 | 12.19 | S-10 | SS | 16 | 5 | 5 | 5 | 10 | DO9 |

REMARKS: Continued On Page 3.

CONTRACTOR NOTES:

1. THE GEOTECHNICAL REPORT WHICH INCLUDES DETAILED BORING RECORDS, SOIL AND ROCK TESTING DATA IS AVAILABLE UPON REQUEST. ROCK CORE SAMPLES ARE AVAILABLE FOR INSPECTION BY THE CONTRACTOR.

2. IT IS THE RESPONSIBILITY OF THE CONTRACTOR TO REVIEW THE PLANS, GEOTECHNICAL REPORT, AND BORING LOGS TO BECOME FAMILIAR WITH THE SUBSURFACE CONDITIONS PERTINENT TO THE ASSOCIATED WORK TO BE CONDUCTED BY THE CONTRACTOR. THE CONTRACTOR SHOULD ALSO CONSIDER THEIR EXPERIENCE IN THE PROJECT'S GEOLOGIC AND SUBSURFACE SETTING AND THEIR EXPERIENCE IN DEALING WITH VARIABLE SUBSURFACE CONDITIONS ACROSS A PROJECT SITE TO BASE THEIR BID UPON AND DECISIONS REGARDING APPROPRIATE EQUIPMENT TO BE UTILIZED.

PRELIMINARY PLANS

SEALED BY

TENNESSEE METRIC D.O.T.

COORDINATES ARE NAD/83(1995), ARE DATUM ADJUSTED BY THE FACTOR OF 1.000 AND TIED TO THE TGRN. ALL ELEVATIONS ARE REFERENCED TO THE NAVD 1988.

STATE OF TENNESSEE
DEPARTMENT OF TRANSPORTATION

SOIL BORING LOGS
RETAINING WALLS
NO. 7 AND 8

SCALE: AS NOTED

9/9/2015
R:_Infrastructure Project Files\2015 Infra Projects\7681-15-002 ALCOA Hwy (SR 115) WALLS 7 AND 8\06 - CADD\03-23 RETAINING WALL NO. 7 AND 8 SOIL BORING LOGS.SHT

| TYPE | YEAR | PROJECT NO. | SHEET NO. |
|---|---|---|---|
| CONST. | 2015 | 47026-3279-14 | ---- |

amec foster wheeler — GEOTECHNICAL BRANCH, NASHVILLE, TENNESSEE — LOG OF BORING B-43, SHEET 3 OF 4

PROJECT: ALCOA HIGHWAY WIDENING (SR-115) RETAINING WALLS 7 AND 8 — DRILLER: TRI-STATE DRILLING
PROJECT NO.: 7681-15-002 — ON-SITE REP.: WDS
BORING NO. / LOCATION: STA 5+860, 23.0 m Left — DRY ON COMPLETION ?: YES
DATE: July 24, 2015 — SURFACE ELEV.: 948.9 FT. 289.2 M
REFUSAL: DEPTH NA FT. M — ELEV. FT. M
SAMPLED: 75.0 FT. 22.9 M
TOP OF ROCK: DEPTH NA FT. M — ELEV. FT. M
BEGAN CORING: DEPTH NA FT. M — ELEV. FT. M
FOOTAGE CORED (LF): 0.0 FT. 0.0 M
BOTTOM OF HOLE: DEPTH 75.0 FT. 22.9 M — ELEV. 873.9 FT. 266.4 M
BORING ADVANCED BY: POWER AUGERING X WASHBORING

WATER LEVEL DATA (IF APPLICABLE): COMPLETION: DEPTH FT. M, ELEV. FT. M; AFTER 24 HRS.: DEPTH FT. M, ELEV. FT. M; LDW AT: DEPTH FT. M, ELEV. FT. M

| STRATUM DEPTH FT. | STRATUM DEPTH M. | SAMPLE DEPTH FROM FT. | FROM M. | TO FT. | TO M. | SAMPLE OR RUN NO. | SAMPLE TYPE | SPLE/CORE RECOV'D (IN.) | SPT VALUES 6" | 6" | 6" | N | DESCRIPTION |
|---|---|---|---|---|---|---|---|---|---|---|---|---|---|
| 42.5 | 12.95 | 40.0 | 12.19 | | | | | | | | | | |
| | | 43.5 | 13.26 | 43.5 | 13.26 | | A | | | | | | |
| 45.0 | 13.72 | 45.0 | 13.72 | 45.0 | 13.72 | S-11 | SS | 18 | 2 | 6 | 8 | 14 | DO9, (Medium Dense) |
| 47.5 | 14.48 | | | | | | A | | | | | | |
| | | 48.5 | 14.78 | 48.5 | 14.78 | | | | | | | | |
| 50.0 | 15.24 | 50.0 | 15.24 | 50.0 | 15.24 | S-12 | SS | 14 | 4 | 7 | 7 | 14 | DO11 |
| 52.5 | 16.00 | | | | | | A | | | | | | |
| | | 53.5 | 16.31 | 53.5 | 16.31 | | | | | | | | |
| 55.0 | 16.76 | 55.0 | 16.76 | 55.0 | 16.76 | S-13 | SS | 18 | 5 | 7 | 9 | 16 | DO11 |
| 57.5 | 17.53 | | | | | | A | | | | | | |
| | | 58.5 | 17.83 | 58.5 | 17.83 | | | | | | | | |
| 60.0 | 18.29 | | | 60.0 | 18.29 | S-14 | SS | 18 | 7 | 9 | 10 | 19 | Sand (F), very silty to slightly clayey, light yellowish-brown to dark brown (Moist)(Medium Dense) (Decomposed Siltstone/ Sandstone) |

REMARKS: Continued On Page 4.

amec foster wheeler — GEOTECHNICAL BRANCH, NASHVILLE, TENNESSEE — LOG OF BORING B-44, SHEET 1 OF 3

PROJECT: ALCOA HIGHWAY WIDENING (SR-115) RETAINING WALLS 7 AND 8 — DRILLER: TRI-STATE DRILLING
PROJECT NO.: 7681-15-002 — ON-SITE REP.: WDS
BORING NO. / LOCATION: STA 5+890, 20.0 m Left — DRY ON COMPLETION ?: YES
DATE: July 21, 2015 — SURFACE ELEV.: 929.4 FT. 283.3 M
REFUSAL: DEPTH NA FT. M — ELEV. FT. M
SAMPLED: 60.0 FT. 18.3 M
TOP OF ROCK: DEPTH NA FT. M — ELEV. FT. M
BEGAN CORING: DEPTH NA FT. M — ELEV. FT. M
FOOTAGE CORED (LF): 0.0 FT. 0.0 M
BOTTOM OF HOLE: DEPTH 60.0 FT. 18.3 M — ELEV. 869.4 FT. 265.0 M
BORING ADVANCED BY: POWER AUGERING X WASHBORING

WATER LEVEL DATA (IF APPLICABLE): COMPLETION: DEPTH FT. M, ELEV. FT. M; AFTER 24 HRS.: DEPTH FT. M, ELEV. FT. M; LDW AT: DEPTH FT. M, ELEV. FT. M

| STRATUM DEPTH FT. | STRATUM DEPTH M. | SAMPLE DEPTH FROM FT. | FROM M. | TO FT. | TO M. | SAMPLE OR RUN NO. | SAMPLE TYPE | SPLE/CORE RECOV'D (IN.) | SPT VALUES 6" | 6" | 6" | N | STRATUM DESCRIPTION |
|---|---|---|---|---|---|---|---|---|---|---|---|---|---|
| | | 0.0 | 0.00 | | | | A | | | | | | Asphalt/ Clay, sandy, silty, reddish-brown (Fill) |
| | | 1.0 | 0.30 | 1.0 | 0.30 | | | | | | | | |
| 2.5 | 0.76 | | | 2.5 | 0.76 | S-1 | SS | 12 | 2 | 2 | 2 | 4 | Clay, sandy, silty, reddish-brown with asphalt fragments (Moist)(Soft)(Fill) |
| | | 2.5 | 0.76 | | | | A | | | | | | |
| 5.0 | 1.52 | | | 3.5 | 1.07 | | | | | | | | |
| | | 3.5 | 1.07 | | | S-2 | SS | 14 | 2 | 4 | 5 | 9 | Clay, very sandy, silty, reddish-brown (Moist)(Stiff) |
| | | 5.0 | 1.52 | 5.0 | 1.52 | | A | | | | | | |
| | | 6.0 | 1.83 | 6.0 | 1.83 | | | | | | | | |
| 7.5 | 2.29 | | | | | S-3 | SS | 16 | 3 | 3 | 4 | 7 | Sand (F-M), silty, reddish-brown (moist)(Loose) |
| | | 7.5 | 2.29 | 7.5 | 2.29 | | A | | | | | | |
| | | 8.5 | 2.59 | 8.5 | 2.59 | | | | | | | | |
| 10.0 | 3.05 | | | | | S-4 | SS | 16 | 5 | 3 | 4 | 7 | DO3 |
| | | 10.0 | 3.05 | 10.0 | 3.05 | | | | | | | | |
| 12.5 | 3.81 | | | | | | A | | | | | | |
| | | 13.5 | 4.11 | 13.5 | 4.11 | | | | | | | | |
| 15.0 | 4.57 | | | | | S-5 | SS | 16 | 2 | 3 | 2 | 5 | DO3 |
| | | 15.0 | 4.57 | 15.0 | 4.57 | | | | | | | | |
| 17.5 | 5.33 | | | | | | A | | | | | | |
| | | 18.5 | 5.64 | 18.5 | 5.64 | | | | | | | | |
| 20.0 | 6.10 | | | 20.0 | 6.10 | S-6 | SS | 16 | 2 | 2 | 3 | 5 | DO3 |

REMARKS: **BORING LOCATED IN 10' TO 20' CUT OF RAZED HOUSE.**
Continued On Page 2.

amec foster wheeler — GEOTECHNICAL BRANCH, NASHVILLE, TENNESSEE — LOG OF BORING B-44, SHEET 3 OF 3

PROJECT: ALCOA HIGHWAY WIDENING (SR-115) RETAINING WALLS 7 AND 8 — DRILLER: TRI-STATE DRILLING
PROJECT NO.: 7681-15-002 — ON-SITE REP.: WDS
BORING NO. / LOCATION: STA 5+890, 20.0 m Left — DRY ON COMPLETION ?: YES
DATE: July 21, 2015 — SURFACE ELEV.: 929.4 FT. 283.3 M
REFUSAL: DEPTH NA FT. M — ELEV. FT. M
SAMPLED: 60.0 FT. 18.3 M
TOP OF ROCK: DEPTH NA FT. M — ELEV. FT. M
BEGAN CORING: DEPTH NA FT. M — ELEV. FT. M
FOOTAGE CORED (LF): 0.0 FT. 0.0 M
BOTTOM OF HOLE: DEPTH 60.0 FT. 18.3 M — ELEV. 869.4 FT. 265.0 M
BORING ADVANCED BY: POWER AUGERING X WASHBORING

WATER LEVEL DATA (IF APPLICABLE): COMPLETION: DEPTH FT. M, ELEV. FT. M; AFTER 24 HRS.: DEPTH FT. M, ELEV. FT. M; LDW AT: DEPTH FT. M, ELEV. FT. M

| STRATUM DEPTH FT. | STRATUM DEPTH M. | SAMPLE DEPTH FROM FT. | FROM M. | TO FT. | TO M. | SAMPLE OR RUN NO. | SAMPLE TYPE | SPLE/CORE RECOV'D (IN.) | SPT VALUES 6" | 6" | 6" | N | DESCRIPTION |
|---|---|---|---|---|---|---|---|---|---|---|---|---|---|
| 42.5 | 12.95 | 40.0 | 12.19 | | | | | | | | | | |
| | | 43.5 | 13.26 | 43.5 | 13.26 | | A | | | | | | |
| 45.0 | 13.72 | 45.0 | 13.72 | 45.0 | 13.72 | S-11 | SS | 18 | 5 | 5 | 7 | 12 | Sand (F-M), silty, dark brown to light brown with sandstone fragments at tip (Moist)(Medium Dense)(Decomposed Sandstone) |
| 47.5 | 14.48 | | | | | | A | | | | | | |
| | | 48.5 | 14.78 | 48.5 | 14.78 | | | | | | | | |
| 50.0 | 15.24 | 50.0 | 15.24 | 50.0 | 15.24 | S-12 | SS | 18 | 4 | 4 | 5 | 9 | DO11, (loose) |
| 52.5 | 16.00 | | | | | | A | | | | | | |
| | | 53.5 | 16.31 | 53.5 | 16.31 | | | | | | | | |
| 55.0 | 16.76 | 55.0 | 16.76 | 55.0 | 16.76 | S-13 | SS | 16 | 3 | 4 | 5 | 9 | DO12 |
| 57.5 | 17.53 | | | | | | A | | | | | | |
| | | 58.5 | 17.83 | 58.5 | 17.83 | | | | | | | | |
| 60.0 | 18.29 | | | 60.0 | 18.29 | S-14 | SS | 16 | 6 | 8 | 9 | 17 | Sand (F), silty, dark brown with sandstone fragments (Moist)(Medium Dense)(Decomposed Sandstone |

NO REFUSAL @ 60.0', DRY ON COMPLETION

REMARKS: BORING LOCATED IN 10' TO 20' CUT OF RAZED HOUSE.

amec foster wheeler — GEOTECHNICAL BRANCH, NASHVILLE, TENNESSEE — LOG OF BORING B-46, SHEET 1 OF 4

PROJECT: ALCOA HIGHWAY WIDENING (SR-115) RETAINING WALLS 7 AND 8 — DRILLER: TRI-STATE DRILLING
PROJECT NO.: 7681-15-002 — ON-SITE REP.: WDS
BORING NO. / LOCATION: STA 5+950, 26.0 m Left — DRY ON COMPLETION ?: YES
DATE: 7/28/2015 TO 7/29/2015 — SURFACE ELEV.: 944.7 FT. 287.9 M
REFUSAL: DEPTH 66.5 FT. 20.3 M — ELEV. 878.2 FT. 267.7 M
SAMPLED: 66.5 FT. 20.3 M
TOP OF ROCK: DEPTH NA FT. M — ELEV. FT. M
BEGAN CORING: DEPTH NA FT. M — ELEV. FT. M
FOOTAGE CORED (LF): 0.0 FT. 0.0 M
BOTTOM OF HOLE: DEPTH 66.5 FT. 20.3 M — ELEV. 878.2 FT. 267.7 M
BORING ADVANCED BY: POWER AUGERING X WASHBORING

WATER LEVEL DATA (IF APPLICABLE): COMPLETION: DEPTH FT. M, ELEV. FT. M; AFTER 24 HRS.: DEPTH FT. M, ELEV. FT. M; LDW AT: DEPTH FT. M, ELEV. FT. M

| STRATUM DEPTH FT. | STRATUM DEPTH M. | SAMPLE DEPTH FROM FT. | FROM M. | TO FT. | TO M. | SAMPLE OR RUN NO. | SAMPLE TYPE | SPLE/CORE RECOV'D (IN.) | SPT VALUES 6" | 6" | 6" | N | STRATUM DESCRIPTION |
|---|---|---|---|---|---|---|---|---|---|---|---|---|---|
| | | 0.0 | 0.00 | | | | A | | | | | | |
| | | 1.0 | 0.30 | 1.0 | 0.30 | | | | | | | | |
| 2.5 | 0.76 | | | 2.5 | 0.76 | S-1 | SS | 16 | 2 | 3 | 4 | 7 | Clay, sandy, silty, reddish-brown (Moist)(Medium Stiff) |
| | | 2.5 | 0.76 | | | | A | | | | | | |
| 5.0 | 1.52 | | | 3.5 | 1.07 | | | | | | | | |
| | | 3.5 | 1.07 | | | S-2 | SS | 16 | 2 | 3 | 3 | 6 | DO1 |
| | | 5.0 | 1.52 | 5.0 | 1.52 | | A | | | | | | |
| | | 6.0 | 1.83 | 6.0 | 1.83 | | | | | | | | |
| 7.5 | 2.29 | | | | | S-3 | SS | 16 | 2 | 6 | 8 | 14 | DO1, (stiff) |
| | | 7.5 | 2.29 | 7.5 | 2.29 | | A | | | | | | |
| | | 8.5 | 2.59 | 8.5 | 2.59 | | | | | | | | |
| 10.0 | 3.05 | | | | | S-4 | SS | 14 | 3 | 5 | 6 | 11 | DO3 |
| | | 10.0 | 3.05 | 10.0 | 3.05 | | | | | | | | |
| | | | | | | ST-1 | ST | 24 | | | | | Pocket Penetrometer 4.5+ TSF |
| | | 12.0 | 3.66 | 12.0 | 3.66 | | | | | | | | |
| 12.5 | 3.81 | | | | | S-5 | SS | 18 | 6 | 4 | 4 | 8 | Sand (F-M), silty, reddish-brown (moist)(Loose) |
| | | 13.5 | 4.11 | 13.5 | 4.11 | | | | | | | | |
| 15.0 | 4.57 | | | | | | A | | | | | | |
| 17.5 | 5.33 | | | | | | | | | | | | |
| | | 18.5 | 5.64 | 18.5 | 5.64 | | | | | | | | |
| 20.0 | 6.10 | | | 20.0 | 6.10 | S-6 | SS | 14 | 3 | 4 | 5 | 9 | DO5 |

REMARKS: Continued On Page 2.

amec foster wheeler — GEOTECHNICAL BRANCH, NASHVILLE, TENNESSEE — LOG OF BORING B-43, SHEET 4 OF 4

PROJECT: ALCOA HIGHWAY WIDENING (SR-115) RETAINING WALLS 7 AND 8 — DRILLER: TRI-STATE DRILLING
PROJECT NO.: 7681-15-002 — ON-SITE REP.: WDS
BORING NO. / LOCATION: STA 5+860, 23.0 m Left — DRY ON COMPLETION ?: YES
DATE: July 24, 2015 — SURFACE ELEV.: 948.9 FT. 289.2 M
REFUSAL: DEPTH NA FT. M — ELEV. FT. M
SAMPLED: 75.0 FT. 22.9 M
TOP OF ROCK: DEPTH NA FT. M — ELEV. FT. M
BEGAN CORING: DEPTH NA FT. M — ELEV. FT. M
FOOTAGE CORED (LF): 0.0 FT. 0.0 M
BOTTOM OF HOLE: DEPTH 75.0 FT. 22.9 M — ELEV. 873.9 FT. 266.4 M
BORING ADVANCED BY: POWER AUGERING X WASHBORING

WATER LEVEL DATA (IF APPLICABLE): COMPLETION: DEPTH FT. M, ELEV. FT. M; AFTER 24 HRS.: DEPTH FT. M, ELEV. FT. M; LDW AT: DEPTH FT. M, ELEV. FT. M

| STRATUM DEPTH FT. | STRATUM DEPTH M. | SAMPLE DEPTH FROM FT. | FROM M. | TO FT. | TO M. | SAMPLE OR RUN NO. | SAMPLE TYPE | SPLE/CORE RECOV'D (IN.) | SPT VALUES 6" | 6" | 6" | N | DESCRIPTION |
|---|---|---|---|---|---|---|---|---|---|---|---|---|---|
| 62.5 | 19.05 | 60.0 | 18.29 | | | | | | | | | | |
| | | 63.5 | 19.35 | 63.5 | 19.35 | | A | | | | | | |
| 65.0 | 19.81 | 65.0 | 19.81 | 65.0 | 19.81 | S-15 | SS | 14 | 6 | 9 | 9 | 18 | DO14 |
| 67.5 | 20.57 | | | | | | A | | | | | | |
| | | 68.5 | 20.88 | 68.5 | 20.88 | | | | | | | | |
| 70.0 | 21.33 | 70.0 | 21.34 | 70.0 | 21.34 | S-16 | SS | 16 | 5 | 7 | 9 | 16 | DO14 |
| 72.5 | 22.10 | | | | | | A | | | | | | |
| | | 73.5 | 22.4 | 73.5 | 22.40 | | | | | | | | |
| 75.0 | 22.86 | | | 75.0 | 22.86 | S-17 | SS | 16 | 6 | 8 | 10 | 18 | DO14 |
| 77.5 | 23.62 | | | | | | | | | | | | NO REFUSAL @ 75.0' DRY ON COMPLETION |
| 80.0 | 24.38 | | | | | | | | | | | | |

REMARKS:

amec foster wheeler — GEOTECHNICAL BRANCH, NASHVILLE, TENNESSEE — LOG OF BORING B-44, SHEET 2 OF 3

PROJECT: ALCOA HIGHWAY WIDENING (SR-115) RETAINING WALLS 7 AND 8 — DRILLER: TRI-STATE DRILLING
PROJECT NO.: 7681-15-002 — ON-SITE REP.: WDS
BORING NO. / LOCATION: STA 5+890, 20.0 m Left — DRY ON COMPLETION ?: YES
DATE: July 21, 2015 — SURFACE ELEV.: 929.4 FT. 283.3 M
REFUSAL: DEPTH NA FT. M — ELEV. FT. M
SAMPLED: 60.0 FT. 18.3 M
TOP OF ROCK: DEPTH NA FT. M — ELEV. FT. M
BEGAN CORING: DEPTH NA FT. M — ELEV. FT. M
FOOTAGE CORED (LF): 0.0 FT. 0.0 M
BOTTOM OF HOLE: DEPTH 60.0 FT. 18.3 M — ELEV. 869.4 FT. 265.0 M
BORING ADVANCED BY: POWER AUGERING X WASHBORING

WATER LEVEL DATA (IF APPLICABLE): COMPLETION: DEPTH FT. M, ELEV. FT. M; AFTER 24 HRS.: DEPTH FT. M, ELEV. FT. M; LDW AT: DEPTH FT. M, ELEV. FT. M

| STRATUM DEPTH FT. | STRATUM DEPTH M. | SAMPLE DEPTH FROM FT. | FROM M. | TO FT. | TO M. | SAMPLE OR RUN NO. | SAMPLE TYPE | SPLE/CORE RECOV'D (IN.) | SPT VALUES 6" | 6" | 6" | N | DESCRIPTION |
|---|---|---|---|---|---|---|---|---|---|---|---|---|---|
| | | 20.0 | 6.10 | | | | | | | | | | |
| 22.5 | 6.86 | | | | | | A | | | | | | |
| | | 23.5 | 7.163 | 23.5 | 7.16 | | | | | | | | |
| 25.0 | 7.62 | 25.0 | 7.62 | 25.0 | 7.62 | S-7 | SS | 16 | 2 | 3 | 2 | 5 | DO3 |
| 27.5 | 8.38 | | | | | | A | | | | | | |
| | | 28.5 | 8.687 | 28.5 | 8.69 | | | | | | | | |
| 30.0 | 9.14 | 30.0 | 9.144 | 30.0 | 9.14 | S-8 | SS | 16 | 4 | 2 | 3 | 5 | DO3 |
| 32.5 | 9.91 | | | | | | A | | | | | | |
| | | 33.5 | 10.21 | 33.5 | 10.21 | | | | | | | | |
| 35.0 | 10.67 | 35.0 | 10.67 | 35.0 | 10.67 | S-9 | SS | 14 | 3 | 2 | 3 | 5 | DO3 |
| 37.5 | 11.43 | | | | | | A | | | | | | |
| | | 38.5 | 11.73 | 38.5 | 11.73 | | | | | | | | |
| 40.0 | 12.19 | | | 40.0 | 12.19 | S-10 | SS | 18 | 3 | 5 | 5 | 10 | DO3 |

REMARKS: BORING LOCATED IN 10' TO 20' CUT OF RAZED HOUSE.
Continued On Page 3.

amec foster wheeler — GEOTECHNICAL BRANCH, NASHVILLE, TENNESSEE — LOG OF BORING B-45, SHEET 1 OF 1

PROJECT: ALCOA HIGHWAY WIDENING (SR-115) RETAINING WALLS 7 AND 8 — DRILLER: TRI-STATE DRILLING
PROJECT NO.: 7681-15-002 — ON-SITE REP.: WDS
BORING NO. / LOCATION: STA 5+920, 26.7 m Left — DRY ON COMPLETION ?: YES
DATE: July 28, 2015 — SURFACE ELEV.: 938.9 FT. 286.2 M
REFUSAL: DEPTH 3.5 FT. 1.1 M — ELEV. 935.4 FT. 285.1 M
SAMPLED: 3.5 FT. 1.1 M
TOP OF ROCK: DEPTH 3.5 FT. 1.1 M — ELEV. 935.4 FT. 285.1 M
BEGAN CORING: DEPTH NA FT. M — ELEV. FT. M
FOOTAGE CORED (LF): 0.0 FT. 0.0 M
BOTTOM OF HOLE: DEPTH 3.5 FT. 1.1 M — ELEV. 935.4 FT. 285.1 M
BORING ADVANCED BY: POWER AUGERING X WASHBORING

WATER LEVEL DATA (IF APPLICABLE): COMPLETION: DEPTH FT. M, ELEV. FT. M; AFTER 24 HRS.: DEPTH FT. M, ELEV. FT. M; LDW AT: DEPTH FT. M, ELEV. FT. M

| STRATUM DEPTH FT. | STRATUM DEPTH M. | SAMPLE DEPTH FROM FT. | FROM M. | TO FT. | TO M. | SAMPLE OR RUN NO. | SAMPLE TYPE | SPLE/CORE RECOV'D (IN.) | SPT VALUES 6" | 6" | 6" | N | STRATUM DESCRIPTION |
|---|---|---|---|---|---|---|---|---|---|---|---|---|---|
| | | 0.0 | 0.00 | | | | A | | | | | | Weathered Sandstone On West Cut Slope |
| | | 1.0 | 0.30 | 1.0 | 0.30 | | | | | | | | |
| 2.5 | 0.76 | | | 2.5 | 0.76 | S-1 | SS | 14 | 2 | 4 | 4 | 8 | Sand (F-M), silty, dark brown (moist)(Loose)(Decomposed Sandstone) |
| | | 2.5 | 0.76 | | | | | | | | | | |
| | | | | 3.5 | 1.07 | S-2 | SS | 0 | 50/0 | | | 50/0 | |
| 5.0 | 1.52 | | | | | | | | | | | | AUGER REFUSAL @ 3.5' DRY ON COMPLETION |
| 7.5 | 2.29 | | | | | | | | | | | | |
| 10.0 | 3.05 | | | | | | | | | | | | |
| 12.5 | 3.81 | | | | | | | | | | | | |
| 15.0 | 4.57 | | | | | | | | | | | | |
| 17.5 | 5.33 | | | | | | | | | | | | |
| 20.0 | 6.10 | | | | | | | | | | | | |

REMARKS:

amec foster wheeler — GEOTECHNICAL BRANCH, NASHVILLE, TENNESSEE — LOG OF BORING B-46, SHEET 2 OF 4

PROJECT: ALCOA HIGHWAY WIDENING (SR-115) RETAINING WALLS 7 AND 8 — DRILLER: TRI-STATE DRILLING
PROJECT NO.: 7681-15-002 — ON-SITE REP.: WDS
BORING NO. / LOCATION: STA 5+950, 26.0 m Left — DRY ON COMPLETION ?: YES
DATE: 7/28/2015 TO 7/29/2015 — SURFACE ELEV.: 944.7 FT. 287.9 M
REFUSAL: DEPTH 66.5 FT. 20.3 M — ELEV. 878.2 FT. 267.7 M
SAMPLED: 66.5 FT. 20.3 M
TOP OF ROCK: DEPTH NA FT. M — ELEV. FT. M
BEGAN CORING: DEPTH NA FT. M — ELEV. FT. M
FOOTAGE CORED (LF): 0.0 FT. 0.0 M
BOTTOM OF HOLE: DEPTH 66.5 FT. 20.3 M — ELEV. 878.2 FT. 267.7 M
BORING ADVANCED BY: POWER AUGERING X WASHBORING

WATER LEVEL DATA (IF APPLICABLE): COMPLETION: DEPTH FT. M, ELEV. FT. M; AFTER 24 HRS.: DEPTH FT. M, ELEV. FT. M; LDW AT: DEPTH FT. M, ELEV. FT. M

| STRATUM DEPTH FT. | STRATUM DEPTH M. | SAMPLE DEPTH FROM FT. | FROM M. | TO FT. | TO M. | SAMPLE OR RUN NO. | SAMPLE TYPE | SPLE/CORE RECOV'D (IN.) | SPT VALUES 6" | 6" | 6" | N | DESCRIPTION |
|---|---|---|---|---|---|---|---|---|---|---|---|---|---|
| | | 20.0 | 6.10 | | | | | | | | | | |
| 22.5 | 6.86 | | | | | | A | | | | | | |
| | | 23.5 | 7.163 | 23.5 | 7.16 | | | | | | | | |
| 25.0 | 7.62 | 25.0 | 7.62 | 25.0 | 7.62 | S-7 | SS | 12 | 4 | 4 | 5 | 9 | Sand (F-M), slightly silty, dark brown with sandstone fragments (moist)(Loose)(Decomposed Sandstone) |
| 27.5 | 8.38 | | | | | | A | | | | | | |
| | | 28.5 | 8.687 | 28.5 | 8.69 | | | | | | | | |
| 30.0 | 9.14 | 30.0 | 9.144 | 30.0 | 9.14 | S-8 | SS | 12 | 5 | 7 | 8 | 15 | DO7, (Medium Dense) |
| 32.5 | 9.91 | | | | | | A | | | | | | |
| | | 33.5 | 10.21 | 33.5 | 10.21 | | | | | | | | |
| 35.0 | 10.67 | 35.0 | 10.67 | 35.0 | 10.67 | S-9 | SS | 14 | 6 | 7 | 9 | 16 | DO8 |
| 37.5 | 11.43 | | | | | | A | | | | | | |
| | | 38.5 | 11.73 | 38.5 | 11.73 | | | | | | | | |
| 40.0 | 12.19 | | | 40.0 | 12.19 | S-10 | SS | 16 | 5 | 5 | 5 | 10 | DO8 |

REMARKS: Continued On Page 3.

CONTRACTOR NOTES:

1. THE GEOTECHNICAL REPORT WHICH INCLUDES DETAILED BORING RECORDS, SOIL AND ROCK TESTING DATA IS AVAILABLE UPON REQUEST. ROCK CORE SAMPLES ARE AVAILABLE FOR INSPECTION BY THE CONTRACTOR.

2. IT IS THE RESPONSIBILITY OF THE CONTRACTOR TO REVIEW THE PLANS, GEOTECHNICAL REPORT, AND BORING LOGS TO BECOME FAMILIAR WITH THE SUBSURFACE CONDITIONS PERTINENT TO THE ASSOCIATED WORK TO BE CONDUCTED BY THE CONTRACTOR. THE CONTRACTOR SHOULD ALSO CONSIDER THEIR EXPERIENCE IN THE PROJECT'S GEOLOGIC AND SUBSURFACE SETTING AND THEIR EXPERIENCE IN DEALING WITH VARIABLE SUBSURFACE CONDITIONS ACROSS A PROJECT SITE TO BASE THEIR BID UPON AND DECISIONS REGARDING APPROPRIATE EQUIPMENT TO BE UTILIZED.

PRELIMINARY PLANS

SEALED BY

TENNESSEE METRIC D.O.T.

COORDINATES ARE NAD/83(1995), ARE DATUM ADJUSTED BY THE FACTOR OF 1.000 AND TIED TO THE TGRN. ALL ELEVATIONS ARE REFERENCED TO THE NAVD 1988.

STATE OF TENNESSEE
DEPARTMENT OF TRANSPORTATION

SOIL BORING LOGS
RETAINING WALLS
NO. 7 AND 8

SCALE: AS NOTED

9/9/2015
R:_Infrastructure Project Files\2015 Infra Projects\7681-15-002 ALCOA Hwy (SR 115) WALLS 7 AND 8\06 - CADD\03-23 RETAINING WALL NO. 7 AND 8 SOIL BORING LOGS.SHT

| TYPE | YEAR | PROJECT NO. | SHEET NO. |
|---|---|---|---|
| CONST. | 2015 | 47026-3279-14 | ---- |

amec foster wheeler — GEOTECHNICAL BRANCH, NASHVILLE, TENNESSEE

LOG OF BORING B-46, SHEET 3 OF 4

PROJECT: ALCOA HIGHWAY WIDENING (SR-115) RETAINING WALLS 7 AND 8 — DRILLER: TRI-STATE DRILLING
PROJECT NO.: 7681-15-002 — ON-SITE REP.: WDS
BORING NO. / LOCATION: STA 5+950, 26.0 m Left — DRY ON COMPLETION ?: YES
DATE: 7/28/2015 TO 7/29/2015 — SURFACE ELEV.: 944.7 FT. 287.9 M
REFUSAL: DEPTH 66.5 FT. 20.3 M — ELEV. 878.2 FT. 267.7 M
SAMPLED 66.5 FT. 20.3 M
TOP OF ROCK: DEPTH NA FT. M — ELEV. FT. M
BEGAN CORING: DEPTH NA FT. M — ELEV. FT. M
FOOTAGE CORED (LF): 0.0 FT. 0.0 M
BOTTOM OF HOLE: DEPTH 66.5 FT. 20.3 M — ELEV. 878.2 FT. 267.7 M
BORING ADVANCED BY: POWER AUGERING X WASHBORING

WATER LEVEL DATA (IF APPLICABLE): COMPLETION: DEPTH FT. M, ELEV. FT. M; AFTER 24 HRS.: DEPTH FT. M, ELEV. FT. M; LDW AT: DEPTH FT. M, ELEV. FT. M

| STRATUM DEPTH FT. | STRATUM DEPTH M. | SAMPLE DEPTH FROM FT. | SAMPLE DEPTH FROM M. | SAMPLE DEPTH TO FT. | SAMPLE DEPTH TO M. | SAMPLE OR RUN NO. | SAMPLE TYPE | SPLE/CORE RECOV'D (IN.) | SPT VALUES 6" | 6" | 6" | N | DESCRIPTION |
|---|---|---|---|---|---|---|---|---|---|---|---|---|---|
| 42.5 | 12.95 | 40.0 | 12.19 | | | | | | | | | | |
| | | | | 43.5 | 13.26 | | A | | | | | | |
| 45.0 | 13.72 | 43.5 | 13.26 | | | S-11 | SS | 18 | 7 | 8 | 8 | 16 | DO8 |
| | | 45.0 | 13.72 | 45.0 | 13.72 | | | | | | | | |
| 47.5 | 14.48 | | | | | | A | | | | | | |
| | | | | 48.5 | 14.78 | | | | | | | | |
| 50.0 | 15.24 | 48.5 | 14.78 | | | S-12 | SS | 16 | 5 | 5 | 6 | 11 | DO8 |
| | | 50.0 | 15.24 | 50.0 | 15.24 | | | | | | | | |
| 52.5 | 16.00 | | | | | | A | | | | | | |
| | | | | 53.5 | 16.31 | | | | | | | | |
| 55.0 | 16.76 | 53.5 | 16.31 | | | S-13 | SS | 18 | 5 | 6 | 7 | 13 | DO8 |
| | | 55.0 | 16.76 | 55.0 | 16.76 | | | | | | | | |
| 57.5 | 17.53 | | | | | | A | | | | | | |
| | | | | 58.5 | 17.83 | | | | | | | | |
| 60.0 | 18.29 | 58.5 | 17.83 | | | S-14 | SS | 14 | 4 | 4 | 5 | 9 | DO8 |

REMARKS: Continued On Page 4.

amec foster wheeler — GEOTECHNICAL BRANCH, NASHVILLE, TENNESSEE

LOG OF BORING B-47, SHEET 1 OF 4

PROJECT: ALCOA HIGHWAY WIDENING (SR-115) RETAINING WALLS 7 AND 8 — DRILLER: TRI-STATE DRILLING
PROJECT NO.: 7681-15-002 — ON-SITE REP.: WDS
BORING NO. / LOCATION: STA 5+980, 29.5 m Left — DRY ON COMPLETION ?: YES
DATE: 7/29/2015 TO 7/30/2015 — SURFACE ELEV.: 960.1 FT. 292.6 M
REFUSAL: DEPTH NA FT. M — ELEV. FT. M
SAMPLED 75.0 FT. 22.9 M
TOP OF ROCK: DEPTH NA FT. M — ELEV. FT. M
BEGAN CORING: DEPTH NA FT. M — ELEV. FT. M
FOOTAGE CORED (LF): 0.0 FT. 0.0 M
BOTTOM OF HOLE: DEPTH 75.0 FT. 22.9 M — ELEV. 885.1 FT. 269.8 M
BORING ADVANCED BY: POWER AUGERING X WASHBORING

WATER LEVEL DATA (IF APPLICABLE): COMPLETION: DEPTH FT. M, ELEV. FT. M; AFTER 24 HRS.: DEPTH FT. M, ELEV. FT. M; LDW AT: DEPTH FT. M, ELEV. FT. M

| STRATUM DEPTH FT. | STRATUM DEPTH M. | SAMPLE DEPTH FROM FT. | SAMPLE DEPTH FROM M. | SAMPLE DEPTH TO FT. | SAMPLE DEPTH TO M. | SAMPLE OR RUN NO. | SAMPLE TYPE | SPLE/CORE RECOV'D (IN.) | SPT VALUES 6" | 6" | 6" | N | STRATUM DESCRIPTION |
|---|---|---|---|---|---|---|---|---|---|---|---|---|---|
| | | 0.0 | 0.00 | | | | A | | | | | | |
| | | | | 1.0 | 0.30 | | | | | | | | |
| | | 1.0 | 0.30 | | | S-1 | SS | 12 | 2 | 2 | 3 | 5 | Clay, sandy, silty, reddish-brown (Moist)(Medium Stiff) |
| 2.5 | 0.76 | | | | | | | | | | | | |
| | | | | 2.5 | 0.76 | | A | | | | | | |
| | | 2.5 | 0.76 | | | | | | | | | | |
| | | | | 3.5 | 1.07 | | | | | | | | |
| | | 3.5 | 1.07 | | | S-2 | SS | 12 | 2 | 3 | 4 | 7 | DO1 |
| 5.0 | 1.52 | | | | | | | | | | | | |
| | | | | 5.0 | 1.52 | | A | | | | | | |
| | | 5.0 | 1.52 | | | | | | | | | | |
| | | | | 6.0 | 1.83 | | | | | | | | |
| | | 6.0 | 1.83 | | | S-3 | SS | 16 | 4 | 8 | 11 | 19 | DO1 (Very Stiff) |
| 7.5 | 2.29 | | | | | | | | | | | | |
| | | | | 7.5 | 2.29 | | A | | | | | | |
| | | 7.5 | 2.29 | | | | | | | | | | |
| | | | | 8.5 | 2.59 | | | | | | | | |
| | | 8.5 | 2.59 | | | S-4 | SS | 12 | 3 | 7 | 9 | 16 | DO3 |
| 10.0 | 3.05 | | | | | | | | | | | | |
| | | | | 10.0 | 3.05 | | | | | | | | |
| | | 10.0 | 3.05 | | | ST-1 | ST | 24 | | | | | Pocket Penetrometer 3.5 TSF |
| | | | | 12.0 | 3.66 | | | | | | | | |
| 12.5 | 3.81 | | | | | | | | | | | | |
| | | 12.0 | 3.66 | | | S-5 | SS | 16 | 4 | 4 | 4 | 8 | Sand (F-M), silty, brown (Moist)(Loose) |
| | | | | 13.5 | 4.11 | | | | | | | | |
| 15.0 | 4.57 | | | | | | | | | | | | |
| | | 13.5 | 4.11 | | | | | | | | | | |
| | | | | 18.5 | 5.64 | | | | | | | | |
| 17.5 | 5.33 | | | | | | | | | | | | |
| | | | | 20.0 | 6.10 | | | | | | | | |
| | | 18.5 | 5.64 | | | S-6 | SS | 18 | 4 | 5 | 5 | 10 | DO5, variably clayey |
| 20.0 | 6.10 | | | | | | | | | | | | |

REMARKS: BORING LOCATED IN 8 FOOT BENCH CUT
Continued On Page 2.

amec foster wheeler — GEOTECHNICAL BRANCH, NASHVILLE, TENNESSEE

LOG OF BORING B-47, SHEET 3 OF 4

PROJECT: ALCOA HIGHWAY WIDENING (SR-115) RETAINING WALLS 7 AND 8 — DRILLER: TRI-STATE DRILLING
PROJECT NO.: 7681-15-002 — ON-SITE REP.: WDS
BORING NO. / LOCATION: STA 5+980, 29.5 m Left — DRY ON COMPLETION ?: YES
DATE: 7/29/2015 TO 7/30/2015 — SURFACE ELEV.: 960.1 FT. 292.6 M
REFUSAL: DEPTH NA FT. M — ELEV. FT. M
SAMPLED 75.0 FT. 22.9 M
TOP OF ROCK: DEPTH NA FT. M — ELEV. FT. M
BEGAN CORING: DEPTH NA FT. M — ELEV. FT. M
FOOTAGE CORED (LF): 0.0 FT. 0.0 M
BOTTOM OF HOLE: DEPTH 75.0 FT. 22.9 M — ELEV. 885.1 FT. 269.8 M
BORING ADVANCED BY: POWER AUGERING X WASHBORING

WATER LEVEL DATA (IF APPLICABLE): COMPLETION: DEPTH FT. M, ELEV. FT. M; AFTER 24 HRS.: DEPTH FT. M, ELEV. FT. M; LDW AT: DEPTH FT. M, ELEV. FT. M

| STRATUM DEPTH FT. | STRATUM DEPTH M. | SAMPLE DEPTH FROM FT. | SAMPLE DEPTH FROM M. | SAMPLE DEPTH TO FT. | SAMPLE DEPTH TO M. | SAMPLE OR RUN NO. | SAMPLE TYPE | SPLE/CORE RECOV'D (IN.) | 6" | 6" | 6" | N | DESCRIPTION |
|---|---|---|---|---|---|---|---|---|---|---|---|---|---|
| | | 40.0 | 12.19 | | | | | | | | | | |
| | | | | 43.5 | 13.26 | | A | | | | | | |
| 45.0 | 13.72 | 43.5 | 13.26 | | | S-11 | SS | 18 | 5 | 5 | 6 | 11 | DO8 |
| | | 45.0 | 13.72 | 45.0 | 13.72 | | | | | | | | |
| 47.5 | 14.48 | | | | | | A | | | | | | |
| | | | | 48.5 | 14.78 | | | | | | | | |
| 50.0 | 15.24 | 48.5 | 14.78 | | | S-12 | SS | 18 | 4 | 8 | 5 | 13 | DO8 |
| | | 50.0 | 15.24 | 50.0 | 15.24 | | | | | | | | |
| 52.5 | 16.00 | | | | | | A | | | | | | |
| | | | | 53.5 | 16.31 | | | | | | | | |
| 55.0 | 16.76 | 53.5 | 16.31 | | | S-13 | SS | 16 | 5 | 7 | 6 | 13 | DO8 |
| | | 55.0 | 16.76 | 55.0 | 16.76 | | | | | | | | |
| 57.5 | 17.53 | | | | | | A | | | | | | |
| | | | | 58.5 | 17.83 | | | | | | | | |
| 60.0 | 18.29 | 58.5 | 17.83 | | | S-14 | SS | 8 | 3 | 3 | 5 | 8 | DO8, (loose) |

REMARKS: BORING LOCATED IN 8 FOOT BENCH CUT
Continued On Page 4.

amec foster wheeler — GEOTECHNICAL BRANCH, NASHVILLE, TENNESSEE

LOG OF BORING B-48, SHEET 1 OF 4

PROJECT: ALCOA HIGHWAY WIDENING (SR-115) RETAINING WALLS 7 AND 8 — DRILLER: TRI-STATE DRILLING
PROJECT NO.: 7681-15-002 — ON-SITE REP.: WDS
BORING NO. / LOCATION: STA 6+010, 38.1 m Left — DRY ON COMPLETION ?: YES, PRIOR TO CORING
DATE: 7/30/2015-7/31/2015 — SURFACE ELEV.: 989.5 FT. 301.6 M
REFUSAL: DEPTH 53.0 FT. 16.2 M — ELEV. 936.5 FT. 285.4 M
SAMPLED 53.0 FT. 16.2 M
TOP OF ROCK: DEPTH 53.0 FT. 16.2 M — ELEV. 936.5 FT. 285.4 M
BEGAN CORING: DEPTH 53.0 FT. 16.2 M — ELEV. 936.5 FT. 285.4 M
FOOTAGE CORED (LF): 25.0 FT. 7.6 M
BOTTOM OF HOLE: DEPTH 78.0 FT. 23.8 M — ELEV. 911.5 FT. 277.8 M
BORING ADVANCED BY: CORING POWER AUGERING X WASHBORING

WATER LEVEL DATA (IF APPLICABLE): COMPLETION: DEPTH FT. M, ELEV. FT. M; AFTER 24 HRS.: DEPTH FT. M, ELEV. FT. M; LDW AT: DEPTH FT. M, ELEV. FT. M

| STRATUM DEPTH FT. | STRATUM DEPTH M. | SAMPLE DEPTH FROM FT. | SAMPLE DEPTH FROM M. | SAMPLE DEPTH TO FT. | SAMPLE DEPTH TO M. | SAMPLE OR RUN NO. | SAMPLE TYPE | SPLE/CORE RECOV'D (IN.) | SPT VALUES 6" | 6" | 6" | N | STRATUM DESCRIPTION |
|---|---|---|---|---|---|---|---|---|---|---|---|---|---|
| | | 0.0 | 0.00 | | | | A | | | | | | |
| | | | | 1.0 | 0.30 | | | | | | | | |
| | | 1.0 | 0.30 | | | S-1 | SS | 14 | 4 | 5 | 7 | 12 | Clay, sandy, silty, reddish-brown (Moist)(Stiff) |
| 2.5 | 0.76 | | | | | | | | | | | | |
| | | | | 2.5 | 0.76 | | A | | | | | | |
| | | 2.5 | 0.76 | | | | | | | | | | |
| | | | | 3.5 | 1.07 | | | | | | | | |
| | | 3.5 | 1.07 | | | S-2 | SS | 14 | 4 | 4 | 5 | 9 | DO1 |
| 5.0 | 1.52 | | | | | | | | | | | | |
| | | | | 5.0 | 1.52 | | A | | | | | | |
| | | 5.0 | 1.52 | | | | | | | | | | |
| | | | | 6.0 | 1.83 | | | | | | | | |
| | | 6.0 | 1.83 | | | S-3 | SS | 18 | 5 | 7 | 10 | 17 | DO1, very stiff |
| 7.5 | 2.29 | | | | | | | | | | | | |
| | | | | 7.5 | 2.29 | | A | | | | | | |
| | | 7.5 | 2.29 | | | | | | | | | | |
| | | | | 8.5 | 2.59 | | | | | | | | |
| | | 8.5 | 2.59 | | | S-4 | SS | 16 | 4 | 5 | 6 | 11 | DO1 |
| 10.0 | 3.05 | | | | | | | | | | | | |
| | | | | 10.0 | 3.05 | | | | | | | | |
| | | 10.0 | 3.05 | | | ST-1 | ST | 24 | | | | | Pocket Penetrometer 4.5+ TSF |
| | | | | 12.0 | 3.66 | | | | | | | | |
| 12.5 | 3.81 | | | | | | | | | | | | |
| | | 12.0 | 3.66 | | | S-5 | SS | 14 | 6 | 9 | 9 | 18 | Sand (F-M), silty, variably clayey, reddish-brown (Moist)(Medium Dense) |
| | | | | 13.5 | 4.11 | | | | | | | | |
| 15.0 | 4.57 | | | | | | | | | | | | |
| | | 13.5 | 4.11 | | | | | | | | | | |
| | | | | 18.5 | 5.64 | | | | | | | | |
| 17.5 | 5.33 | | | | | | | | | | | | |
| | | | | 20.0 | 6.10 | | | | | | | | |
| | | 18.5 | 5.64 | | | S-6 | SS | 18 | 4 | 5 | 5 | 10 | DO5, (loose) (Decomposed Sandstone/ Siltstone) |
| 20.0 | 6.10 | | | | | | | | | | | | |

REMARKS: BORNG LOCATED IN 6 FOOT CUT
Continued On Page 2.

amec foster wheeler — GEOTECHNICAL BRANCH, NASHVILLE, TENNESSEE

LOG OF BORING B-46, SHEET 4 OF 4

PROJECT: ALCOA HIGHWAY WIDENING (SR-115) RETAINING WALLS 7 AND 8 — DRILLER: TRI-STATE DRILLING
PROJECT NO.: 7681-15-002 — ON-SITE REP.: WDS
BORING NO. / LOCATION: STA 5+950, 26.0 m Left — DRY ON COMPLETION ?: YES
DATE: 7/28/2015 TO 7/29/2015 — SURFACE ELEV.: 944.7 FT. 287.9 M
REFUSAL: DEPTH 66.5 FT. 20.3 M — ELEV. 878.2 FT. 267.7 M
SAMPLED 66.5 FT. 20.3 M
TOP OF ROCK: DEPTH NA FT. M — ELEV. FT. M
BEGAN CORING: DEPTH NA FT. M — ELEV. FT. M
FOOTAGE CORED (LF): 0.0 FT. 0.0 M
BOTTOM OF HOLE: DEPTH 66.5 FT. 20.3 M — ELEV. 878.2 FT. 267.7 M
BORING ADVANCED BY: POWER AUGERING X WASHBORING

WATER LEVEL DATA (IF APPLICABLE): COMPLETION: DEPTH FT. M, ELEV. FT. M; AFTER 24 HRS.: DEPTH FT. M, ELEV. FT. M; LDW AT: DEPTH FT. M, ELEV. FT. M

| STRATUM DEPTH FT. | STRATUM DEPTH M. | SAMPLE DEPTH FROM FT. | SAMPLE DEPTH FROM M. | SAMPLE DEPTH TO FT. | SAMPLE DEPTH TO M. | SAMPLE OR RUN NO. | SAMPLE TYPE | SPLE/CORE RECOV'D (IN.) | 6" | 6" | 6" | N | DESCRIPTION |
|---|---|---|---|---|---|---|---|---|---|---|---|---|---|
| | | 60.0 | 18.29 | | | | | | | | | | |
| | | | | 63.5 | 19.35 | | A | | | | | | |
| 62.5 | 19.05 | | | | | | | | | | | | |
| | | 63.5 | 19.35 | | | | | | | | | | |
| | | | | 63.5 | 19.35 | | | | | | | | |
| | | | | 64.3 | 19.60 | S-15 | SS | 8 | 8 | 50/.3 | | 50/.3 | DO8 |
| 65.0 | 19.81 | | | | | | | | | | | | |
| | | | | | | | A | | | | | | |
| | | | | 66.5 | 20.27 | | | | | | | | |
| 67.5 | 20.57 | | | | | | | | | | | | AUGER REFUSAL @ 66.5' DRY ON COMPLETION |
| 70.0 | 21.33 | | | | | | | | | | | | |
| 72.5 | 22.10 | | | | | | | | | | | | |
| 75.0 | 22.86 | | | | | | | | | | | | |
| 77.5 | 23.62 | | | | | | | | | | | | |
| 80.0 | 24.38 | | | | | | | | | | | | |

REMARKS:

amec foster wheeler — GEOTECHNICAL BRANCH, NASHVILLE, TENNESSEE

LOG OF BORING B-47, SHEET 2 OF 4

PROJECT: ALCOA HIGHWAY WIDENING (SR-115) RETAINING WALLS 7 AND 8 — DRILLER: TRI-STATE DRILLING
PROJECT NO.: 7681-15-002 — ON-SITE REP.: WDS
BORING NO. / LOCATION: STA 5+980, 29.5 m Left — DRY ON COMPLETION ?: YES
DATE: 7/29/2015 TO 7/30/2015 — SURFACE ELEV.: 960.1 FT. 292.6 M
REFUSAL: DEPTH NA FT. M — ELEV. FT. M
SAMPLED 75.0 FT. 22.9 M
TOP OF ROCK: DEPTH NA FT. M — ELEV. FT. M
BEGAN CORING: DEPTH NA FT. M — ELEV. FT. M
FOOTAGE CORED (LF): 0.0 FT. 0.0 M
BOTTOM OF HOLE: DEPTH 75.0 FT. 22.9 M — ELEV. 885.1 FT. 269.8 M
BORING ADVANCED BY: POWER AUGERING X WASHBORING

WATER LEVEL DATA (IF APPLICABLE): COMPLETION: DEPTH FT. M, ELEV. FT. M; AFTER 24 HRS.: DEPTH FT. M, ELEV. FT. M; LDW AT: DEPTH FT. M, ELEV. FT. M

| STRATUM DEPTH FT. | STRATUM DEPTH M. | SAMPLE DEPTH FROM FT. | SAMPLE DEPTH FROM M. | SAMPLE DEPTH TO FT. | SAMPLE DEPTH TO M. | SAMPLE OR RUN NO. | SAMPLE TYPE | SPLE/CORE RECOV'D (IN.) | 6" | 6" | 6" | N | DESCRIPTION |
|---|---|---|---|---|---|---|---|---|---|---|---|---|---|
| | | 20.0 | 6.10 | | | | | | | | | | |
| | | | | 23.5 | 7.16 | | A | | | | | | |
| 22.5 | 6.86 | | | | | | | | | | | | |
| | | 23.5 | 7.163 | | | | | | | | | | |
| | | | | 25.0 | 7.62 | | | | | | | | |
| | | | | 25.0 | 7.62 | S-7 | SS | 18 | 5 | 5 | 5 | 10 | DO5 |
| 25.0 | 7.62 | | | | | | | | | | | | |
| | | 25.0 | 7.62 | | | | | | | | | | |
| | | | | 28.5 | 8.69 | | A | | | | | | |
| 27.5 | 8.38 | | | | | | | | | | | | |
| | | 28.5 | 8.687 | | | | | | | | | | |
| | | | | 30.0 | 9.14 | | | | | | | | |
| | | | | 30.0 | 9.144 | S-8 | SS | 16 | 3 | 6 | 6 | 12 | Sand (F-M), silty, yellowish-brown with numerous sandstone fragments (Moist)(Medium Dense) (Decomposed Sandstone) |
| 30.0 | 9.14 | | | | | | | | | | | | |
| | | 30.0 | 9.144 | | | | | | | | | | |
| | | | | 33.5 | 10.21 | | A | | | | | | |
| 32.5 | 9.91 | | | | | | | | | | | | |
| | | 33.5 | 10.21 | | | | | | | | | | |
| | | | | 35.0 | 10.67 | | | | | | | | |
| | | | | 35.0 | 10.67 | S-9 | SS | 16 | 4 | 6 | 6 | 12 | DO8 |
| 35.0 | 10.67 | | | | | | | | | | | | |
| | | 35.0 | 10.67 | | | | | | | | | | |
| | | | | 38.5 | 11.73 | | A | | | | | | |
| 37.5 | 11.43 | | | | | | | | | | | | |
| | | 38.5 | 11.73 | | | | | | | | | | |
| | | | | 40.0 | 12.19 | S-10 | SS | 16 | 7 | 5 | 7 | 12 | DO8 |
| 40.0 | 12.19 | | | | | | | | | | | | |

REMARKS: BORING LOCATED IN 8 FOOT BENCH CUT
Continued On Page 3.

amec foster wheeler — GEOTECHNICAL BRANCH, NASHVILLE, TENNESSEE

LOG OF BORING B-47, SHEET 4 OF 4

PROJECT: ALCOA HIGHWAY WIDENING (SR-115) RETAINING WALLS 7 AND 8 — DRILLER: TRI-STATE DRILLING
PROJECT NO.: 7681-15-002 — ON-SITE REP.: WDS
BORING NO. / LOCATION: STA 5+980, 29.5 m Left — DRY ON COMPLETION ?: YES
DATE: 7/29/2015 TO 7/30/2015 — SURFACE ELEV.: 960.1 FT. 292.6 M
REFUSAL: DEPTH NA FT. M — ELEV. FT. M
SAMPLED 75.0 FT. 22.9 M
TOP OF ROCK: DEPTH NA FT. M — ELEV. FT. M
BEGAN CORING: DEPTH NA FT. M — ELEV. FT. M
FOOTAGE CORED (LF): 0.0 FT. 0.0 M
BOTTOM OF HOLE: DEPTH 75.0 FT. 22.9 M — ELEV. 885.1 FT. 269.8 M
BORING ADVANCED BY: POWER AUGERING X WASHBORING

WATER LEVEL DATA (IF APPLICABLE): COMPLETION: DEPTH FT. M, ELEV. FT. M; AFTER 24 HRS.: DEPTH FT. M, ELEV. FT. M; LDW AT: DEPTH FT. M, ELEV. FT. M

| STRATUM DEPTH FT. | STRATUM DEPTH M. | SAMPLE DEPTH FROM FT. | SAMPLE DEPTH FROM M. | SAMPLE DEPTH TO FT. | SAMPLE DEPTH TO M. | SAMPLE OR RUN NO. | SAMPLE TYPE | SPLE/CORE RECOV'D (IN.) | 6" | 6" | 6" | N | DESCRIPTION |
|---|---|---|---|---|---|---|---|---|---|---|---|---|---|
| | | 60.0 | 18.29 | | | | | | | | | | |
| | | | | 63.5 | 19.35 | | A | | | | | | |
| 62.5 | 19.05 | | | | | | | | | | | | |
| | | 63.5 | 19.35 | | | | | | | | | | |
| | | | | 65.0 | 19.81 | S-15 | SS | 18 | 4 | 7 | 7 | 14 | DO8 |
| 65.0 | 19.81 | | | | | | | | | | | | |
| | | 65.0 | 19.81 | | | | | | | | | | |
| | | | | 68.5 | 20.88 | | A | | | | | | |
| 67.5 | 20.57 | | | | | | | | | | | | |
| | | 68.5 | 20.88 | | | | | | | | | | |
| | | | | 70.0 | 21.34 | | | | | | | | |
| | | | | 70.0 | 21.34 | S-16 | SS | 16 | 7 | 9 | 10 | 19 | DO8 |
| 70.0 | 21.33 | | | | | | | | | | | | |
| | | 70.0 | 21.34 | | | | | | | | | | |
| | | | | 73.5 | 22.40 | | A | | | | | | |
| 72.5 | 22.10 | | | | | | | | | | | | |
| | | 73.5 | 22.4 | | | | | | | | | | |
| | | | | 75.0 | 22.86 | S-17 | SS | 16 | 8 | 10 | 11 | 21 | DO8 |
| 75.0 | 22.86 | | | | | | | | | | | | |
| | | | | | | | | | | | | | NO REFUSAL @ 75.0' DRY ON COMPLETION |
| 77.5 | 23.62 | | | | | | | | | | | | |
| 80.0 | 24.38 | | | | | | | | | | | | |

REMARKS: BORING LOCATED IN 8 FOOT BENCH CUT

amec foster wheeler — GEOTECHNICAL BRANCH, NASHVILLE, TENNESSEE

LOG OF BORING B-48, SHEET 2 OF 4

PROJECT: ALCOA HIGHWAY WIDENING (SR-115) RETAINING WALLS 7 AND 8 — DRILLER: TRI-STATE DRILLING
PROJECT NO.: 7681-15-002 — ON-SITE REP.: WDS
BORING NO. / LOCATION: STA 6+010, 38.1 m Left — DRY ON COMPLETION ?: YES, PRIOR TO CORING
DATE: 7/30/2015-7/31/2015 — SURFACE ELEV.: 989.5 FT. 301.6 M
REFUSAL: DEPTH 53.0 FT. 16.2 M — ELEV. 936.5 FT. 285.4 M
SAMPLED 53.0 FT. 16.2 M
TOP OF ROCK: DEPTH 53.0 FT. 16.2 M — ELEV. 936.5 FT. 285.4 M
BEGAN CORING: DEPTH 53.0 FT. 16.2 M — ELEV. 936.5 FT. 285.4 M
FOOTAGE CORED (LF): 25.0 FT. 7.6 M
BOTTOM OF HOLE: DEPTH 78.0 FT. 23.8 M — ELEV. 911.5 FT. 277.8 M
BORING ADVANCED BY: CORING POWER AUGERING X WASHBORING

WATER LEVEL DATA (IF APPLICABLE): COMPLETION: DEPTH FT. M, ELEV. FT. M; AFTER 24 HRS.: DEPTH FT. M, ELEV. FT. M; LDW AT: DEPTH FT. M, ELEV. FT. M

| STRATUM DEPTH FT. | STRATUM DEPTH M. | SAMPLE DEPTH FROM FT. | SAMPLE DEPTH FROM M. | SAMPLE DEPTH TO FT. | SAMPLE DEPTH TO M. | SAMPLE OR RUN NO. | SAMPLE TYPE | SPLE/CORE RECOV'D (IN.) | 6" | 6" | 6" | N | DESCRIPTION |
|---|---|---|---|---|---|---|---|---|---|---|---|---|---|
| | | 20.0 | 6.10 | | | | | | | | | | |
| | | | | 23.5 | 7.16 | | A | | | | | | |
| 22.5 | 6.86 | | | | | | | | | | | | |
| | | 23.5 | 7.163 | | | | | | | | | | |
| | | | | 25.0 | 7.62 | | | | | | | | |
| | | | | 25.0 | 7.62 | S-7 | SS | 16 | 3 | 3 | 5 | 8 | DO6 |
| 25.0 | 7.62 | | | | | | | | | | | | |
| | | 25.0 | 7.62 | | | | | | | | | | |
| | | | | 28.5 | 8.69 | | A | | | | | | |
| 27.5 | 8.38 | | | | | | | | | | | | |
| | | 28.5 | 8.687 | | | | | | | | | | |
| | | | | 30.0 | 9.14 | | | | | | | | |
| | | | | 30.0 | 9.144 | S-8 | SS | 16 | 3 | 3 | 3 | 6 | Sand (F-M), slightly silty, brown (moist)(Loose)(Decomposed Sandstone) |
| 30.0 | 9.14 | | | | | | | | | | | | |
| | | 30.0 | 9.144 | | | | | | | | | | |
| | | | | 33.5 | 10.21 | | A | | | | | | |
| 32.5 | 9.91 | | | | | | | | | | | | |
| | | 33.5 | 10.21 | | | | | | | | | | |
| | | | | 35.0 | 10.67 | | | | | | | | |
| | | | | 35.0 | 10.67 | S-9 | SS | 18 | 3 | 3 | 3 | 6 | DO8 |
| 35.0 | 10.67 | | | | | | | | | | | | |
| | | 35.0 | 10.67 | | | | | | | | | | |
| | | | | 38.5 | 11.73 | | A | | | | | | |
| 37.5 | 11.43 | | | | | | | | | | | | |
| | | 38.5 | 11.73 | | | | | | | | | | |
| | | | | 40.0 | 12.19 | S-10 | SS | 18 | 3 | 5 | 5 | 10 | DO8 |
| 40.0 | 12.19 | | | | | | | | | | | | |

REMARKS: BORNG LOCATED IN 6 FOOT CUT
Continued On Page 3.

CONTRACTOR NOTES:

1. THE GEOTECHNICAL REPORT WHICH INCLUDES DETAILED BORING RECORDS, SOIL AND ROCK TESTING DATA IS AVAILABLE UPON REQUEST. ROCK CORE SAMPLES ARE AVAILABLE FOR INSPECTION BY THE CONTRACTOR.

2. IT IS THE RESPONSIBILITY OF THE CONTRACTOR TO REVIEW THE PLANS, GEOTECHNICAL REPORT, AND BORING LOGS TO BECOME FAMILIAR WITH THE SUBSURFACE CONDITIONS PERTINENT TO THE ASSOCIATED WORK TO BE CONDUCTED BY THE CONTRACTOR. THE CONTRACTOR SHOULD ALSO CONSIDER THEIR EXPERIENCE IN THE PROJECT'S GEOLOGIC AND SUBSURFACE SETTING AND THEIR EXPERIENCE IN DEALING WITH VARIABLE SUBSURFACE CONDITIONS ACROSS A PROJECT SITE TO BASE THEIR BID UPON AND DECISIONS REGARDING APPROPRIATE EQUIPMENT TO BE UTILIZED.

PRELIMINARY PLANS

SEALED BY

TENNESSEE METRIC D.O.T.

COORDINATES ARE NAD/83(1995), ARE DATUM ADJUSTED BY THE FACTOR OF 1.000 AND TIED TO THE TGRN. ALL ELEVATIONS ARE REFERENCED TO THE NAVD 1988.

STATE OF TENNESSEE
DEPARTMENT OF TRANSPORTATION

SOIL BORING LOGS
RETAINING WALLS
NO. 7 AND 8

SCALE: AS NOTED

9/9/2015
R:_Infrastructure Project Files\2015 Infra Projects\7681-15-002 ALCOA Hwy (SR 115) WALLS 7 AND 8\06 - CADD\03-23 RETAINING WALL NO. 7 AND 8 SOIL BORING LOGS.SHT

| TYPE | YEAR | PROJECT NO. | SHEET NO. |
|---|---|---|---|
| CONST. | 2015 | 47026-3279-14 | ---- |

amec foster wheeler — GEOTECHNICAL BRANCH, NASHVILLE, TENNESSEE

LOG OF BORING B-48, SHEET 3 OF 4

PROJECT: ALCOA HIGHWAY WIDENING (SR-115) RETAINING WALLS 7 AND 8 — DRILLER: TRI-STATE DRILLING
PROJECT NO.: 7681-15-002 — ON-SITE REP.: WDS
BORING NO. / LOCATION: STA 6+010, 38.1 m Left — DRY ON COMPLETION ?: YES, PRIOR TO CORING
DATE: 7/30/2015-7/31/2015 — SURFACE ELEV.: 989.5 FT. 301.6 M
REFUSAL: DEPTH 53.0 FT. 16.2 M — ELEV. 936.5 FT. 285.4 M
SAMPLED: 53.0 FT. 16.2 M
TOP OF ROCK: DEPTH 53.0 FT. 16.2 M — ELEV. 936.5 FT. 285.4 M
BEGAN CORING: DEPTH 53.0 FT. 16.2 M — ELEV. 936.5 FT. 285.4 M
FOOTAGE CORED (LF): 25.0 FT. 7.6 M
BOTTOM OF HOLE: DEPTH 78.0 FT. 23.8 M — ELEV. 911.5 FT. 277.8 M
BORING ADVANCED BY: CORING — POWER AUGERING: X — WASHBORING:

WATER LEVEL DATA (IF APPLICABLE)
COMPLETION: DEPTH FT. M — ELEV. FT. M
AFTER 24 HRS.: DEPTH FT. M — ELEV. FT. M
LDW AT: DEPTH FT. M — ELEV. FT. M

| STRATUM DEPTH FT. | STRATUM DEPTH M. | SAMPLE DEPTH FROM FT. | FROM M. | TO FT. | TO M. | SAMPLE OR RUN NO. | SAMPLE TYPE | SPLE/CORE RECOV'D (IN.) | SPT VALUES 6" | 6" | 6" | N | DESCRIPTION |
|---|---|---|---|---|---|---|---|---|---|---|---|---|---|
| 42.5 | 12.95 | 40.0 | 12.19 | | | | A | | | | | | |
| | | 43.5 | 13.26 | 43.5 | 13.26 | S-11 | SS | 14 | 3 | 4 | 4 | 8 | DO8 |
| 45.0 | 13.72 | 45.0 | 13.72 | 45.0 | 13.72 | | | | | | | | |
| 47.5 | 14.48 | | | | | | A | | | | | | |
| | | 48.5 | 14.78 | 48.5 | 14.78 | | | | | | | | |
| 50.0 | 15.24 | 50.0 | 15.24 | 50.0 | 15.24 | S-12 | SS | 16 | 4 | 5 | 7 | 12 | Sand (F-M), slightly silty, dark brown/ yellowish-brown with sandstone fragments (moist) med dense (Decomposed Sandstone/ Siltstone) |
| 52.5 | 16.00 | | | | | | A | | | | | | |
| | | | | 53.0 | 16.15 | | | | | | | | AUGER REFUSAL @ 53.0' BEGIN NQ CORING @ 53.0', 100% DWR |
| | | 53.0 | 16.15 | | | RUN 1 RAN 5.0 REC 2.3 RQD 10% | | | | | | | |
| 55.0 | 16.76 | | | | | | | | | | | | Sandstone, calcareous, siliceous, gray; variably stained, leached with open stained bedding planes. Loss 2.4' 53.6' to 56.1' |
| 57.5 | 17.53 | | | 58.0 | 17.68 | | | | | | | | |
| | | 58.9 | 17.68 | | | RUN 2 RAN 4.8 REC 5.1 RQD 92% | | | | | | | |
| 60.0 | 18.29 | | | 60.0 | 18.29 | | | | | | | | $q_u$=136.6 MPa, $\gamma$=26.83 kN/m$^3$ |

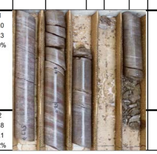

REMARKS: BORNG LOCATED IN 6 FOOT CUT
Continued On Page 4.

amec foster wheeler — GEOTECHNICAL BRANCH, NASHVILLE, TENNESSEE

LOG OF BORING B-49, SHEET 1 OF 5

PROJECT: ALCOA HIGHWAY WIDENING (SR-115) RETAINING WALLS 7 AND 8 — DRILLER: TRI-STATE DRILLING
PROJECT NO.: 7681-15-002 — ON-SITE REP.: WDS
BORING NO. / LOCATION: STA 6+070, 46.6 m Left — DRY ON COMPLETION ?: YES, PRIOR TO CORING
DATE: 8-14-2015 TO 8-19-2015 — SURFACE ELEV.: 1019.5 FT. 310.7 M
REFUSAL: DEPTH 48.5 FT. 14.8 M — ELEV. 971.0 FT. 296.0 M
SAMPLED: 48.5 FT. 14.8 M
TOP OF ROCK: DEPTH 48.5 FT. 14.8 M — ELEV. 971.0 FT. 296.0 M
BEGAN CORING: DEPTH 48.5 FT. 14.8 M — ELEV. 971.0 FT. 296.0 M
FOOTAGE CORED (LF): 36.0 FT. 11.0 M
BOTTOM OF HOLE: DEPTH 84.5 FT. 25.8 M — ELEV. 935.0 FT. 285.0 M
BORING ADVANCED BY: CORING — POWER AUGERING: X — WASHBORING:

WATER LEVEL DATA (IF APPLICABLE)
COMPLETION: DEPTH FT. M — ELEV. FT. M
AFTER 24 HRS.: DEPTH FT. M — ELEV. FT. M
LDW AT: DEPTH 65.0 FT. 19.8 M — ELEV. 954.5 FT. 290.9 M

| STRATUM DEPTH FT. | STRATUM DEPTH M. | SAMPLE DEPTH FROM FT. | FROM M. | TO FT. | TO M. | SAMPLE OR RUN NO. | SAMPLE TYPE | SPLE/CORE RECOV'D (IN.) | SPT VALUES 6" | 6" | 6" | N | STRATUM DESCRIPTION |
|---|---|---|---|---|---|---|---|---|---|---|---|---|---|
| | | 0.0 | 0.00 | | | | A | | | | | | |
| | | 1.0 | 0.30 | 1.0 | 0.30 | S-1 | SS | 12 | 2 | 2 | 3 | 5 | Sand (F-M), clayey, silty, reddish-brown (Moist)(Very Loose) |
| 2.5 | 0.76 | | | 2.5 | 0.76 | | A | | | | | | |
| | | 2.5 | 0.76 | | | | | | | | | | |
| | | 3.5 | 1.07 | 3.5 | 1.07 | S-2 | SS | 14 | 2 | 3 | 3 | 6 | Clay, very sandy, silty, reddish-brown (Moist)(Medium Stiff) |
| 5.0 | 1.52 | | | | | | A | | | | | | |
| | | 5.0 | 1.52 | 5.0 | 1.52 | | | | | | | | |
| | | 6.0 | 1.83 | 6.0 | 1.83 | S-3 | SS | 18 | 5 | 4 | 5 | 9 | DO2 (Moist)(Stiff) |
| 7.5 | 2.29 | | | | | | A | | | | | | |
| | | 7.5 | 2.29 | 7.5 | 2.29 | | | | | | | | |
| | | 8.5 | 2.59 | 8.5 | 2.59 | S-4 | SS | 14 | 3 | 4 | 4 | 8 | DO2 (Moist)(Medium Stiff) |
| 10.0 | 3.05 | | | | | | | | | | | | |
| | | 10.0 | 3.05 | 10.0 | 3.05 | ST-1 | ST | 24 | | | | | Pocket Penetrometer 4.0 TSF |
| 12.5 | 3.81 | | | | | | | | | | | | |
| | | 12.0 | 3.66 | 12.0 | 3.66 | S-5 | SS | 18 | 2 | 2 | 3 | 5 | Sand (F-M), silty, brown to dark brown (moist)(Very Loose) |
| 15.0 | 4.57 | | | | | | | | | | | | |
| | | 13.5 | 4.11 | 13.5 | 4.11 | | | | | | | | |
| | | | | | | | A | | | | | | |
| 17.5 | 5.33 | | | | | | | | | | | | |
| | | 18.5 | 5.64 | 18.5 | 5.64 | | | | | | | | |
| 20.0 | 6.10 | | | 20.0 | 6.10 | S-6 | SS | 14 | 4 | 3 | 4 | 7 | DO5, slightly silty, dark brown (Loose)(Decomposed Sandstone) |

REMARKS: Continued On Page 2.

amec foster wheeler — GEOTECHNICAL BRANCH, NASHVILLE, TENNESSEE

LOG OF BORING B-49, SHEET 3 OF 5

PROJECT: ALCOA HIGHWAY WIDENING (SR-115) RETAINING WALLS 7 AND 8 — DRILLER: TRI-STATE DRILLING
PROJECT NO.: 7681-15-002 — ON-SITE REP.: WDS
BORING NO. / LOCATION: STA 6+070, 46.6 m Left — DRY ON COMPLETION ?: YES, PRIOR TO CORING
DATE: 8-14-2015 TO 8-19-2015 — SURFACE ELEV.: 1019.5 FT. 310.7 M
REFUSAL: DEPTH 48.5 FT. 14.8 M — ELEV. 971.0 FT. 296.0 M
SAMPLED: 48.5 FT. 14.8 M
TOP OF ROCK: DEPTH 48.5 FT. 14.8 M — ELEV. 971.0 FT. 296.0 M
BEGAN CORING: DEPTH 48.5 FT. 14.8 M — ELEV. 971.0 FT. 296.0 M
FOOTAGE CORED (LF): 36.0 FT. 11.0 M
BOTTOM OF HOLE: DEPTH 84.5 FT. 25.8 M — ELEV. 935.0 FT. 285.0 M
BORING ADVANCED BY: CORING — POWER AUGERING: X — WASHBORING:

WATER LEVEL DATA (IF APPLICABLE)
COMPLETION: DEPTH FT. M — ELEV. FT. M
AFTER 24 HRS.: DEPTH FT. M — ELEV. FT. M
LDW AT: DEPTH 65.0 FT. 19.8 M — ELEV. 954.5 FT. 290.9 M

| STRATUM DEPTH FT. | STRATUM DEPTH M. | SAMPLE DEPTH FROM FT. | FROM M. | TO FT. | TO M. | SAMPLE OR RUN NO. | SAMPLE TYPE | SPLE/CORE RECOV'D (IN.) | SPT VALUES 6" | 6" | 6" | N | DESCRIPTION |
|---|---|---|---|---|---|---|---|---|---|---|---|---|---|
| 42.5 | 12.95 | 40.0 | 12.19 | | | | A | | | | | | |
| | | 43.5 | 13.26 | 43.5 | 13.26 | S-11 | SS | 18 | 4 | 5 | 5 | 10 | DO9 |
| 45.0 | 13.72 | 45.0 | 13.72 | 45.0 | 13.72 | | | | | | | | |
| 47.5 | 14.48 | | | | | | A | | | | | | |
| | | 48.5 | 14.78 | 48.5 | 14.78 | | | | | | | | AUGER REFUSAL @ 48.5', DRY PRIOR TO CORING BEGIN NQ CORING @ 48.5', 100% DWR |
| | | 48.5 | 14.78 | | | RUN 1 RAN 5.0 REC 4.8 RQD 70% | | | | | | | |
| 50.0 | 15.24 | | | | | | | | | | | | Sandstone, calcareous, gray to wea. reddish-brown, variably stained, leached, weathered with open stained bedding planes and partially healed open stained bedding planes DIP 15° |
| 52.5 | 16.00 | | | 53.3 | 16.25 | | | | | | | | $q_u$=119.9 MPa, $\gamma$=26.73 kN/m$^3$ |
| | | | | 53.5 | 16.31 | | | | | | | | |
| | | 53.5 | 16.31 | | | RUN 2 RAN 5.0 REC 4.8 RQD 36% | | | | | | | |
| 55.0 | 16.76 | | | | | | | | | | | | DIP 15° |
| 57.5 | 17.53 | | | 58.5 | 17.83 | | | | | | | | |
| | | 58.5 | 17.83 | | | RUN 3 RAN 5.0 REC 5.0 RQD 68% | | | | | | | |
| 60.0 | 18.29 | | | 60.0 | 18.29 | | | | | | | | |

REMARKS: Continued On Page 4.

amec foster wheeler — GEOTECHNICAL BRANCH, NASHVILLE, TENNESSEE

LOG OF BORING B-49, SHEET 5 OF 5

PROJECT: ALCOA HIGHWAY WIDENING (SR-115) RETAINING WALLS 7 AND 8 — DRILLER: TRI-STATE DRILLING
PROJECT NO.: 7681-15-002 — ON-SITE REP.: WDS
BORING NO. / LOCATION: STA 6+070, 46.6 m Left — DRY ON COMPLETION ?: YES, PRIOR TO CORING
DATE: 8-14-2015 TO 8-19-2015 — SURFACE ELEV.: 1019.5 FT. 310.7 M
REFUSAL: DEPTH 48.5 FT. 14.8 M — ELEV. 971.0 FT. 296.0 M
SAMPLED: 48.5 FT. 14.8 M
TOP OF ROCK: DEPTH 48.5 FT. 14.8 M — ELEV. 971.0 FT. 296.0 M
BEGAN CORING: DEPTH 48.5 FT. 14.8 M — ELEV. 971.0 FT. 296.0 M
FOOTAGE CORED (LF): 36.0 FT. 11.0 M
BOTTOM OF HOLE: DEPTH 84.5 FT. 25.8 M — ELEV. 935.0 FT. 285.0 M
BORING ADVANCED BY: CORING — POWER AUGERING: X — WASHBORING:

WATER LEVEL DATA (IF APPLICABLE)
COMPLETION: DEPTH FT. M — ELEV. FT. M
AFTER 24 HRS.: DEPTH FT. M — ELEV. FT. M
LDW AT: DEPTH 65.0 FT. 19.8 M — ELEV. 954.5 FT. 290.9 M

| STRATUM DEPTH FT. | STRATUM DEPTH M. | SAMPLE DEPTH FROM FT. | FROM M. | TO FT. | TO M. | SAMPLE OR RUN NO. | SAMPLE TYPE | SPLE/CORE RECOV'D (IN.) | SPT VALUES 6" | 6" | 6" | N | DESCRIPTION |
|---|---|---|---|---|---|---|---|---|---|---|---|---|---|
| | | 80.0 | 24.38 | | | RUN 7 RAN 5.0 REC 4.8 RQD= 78% | | | | | | | |
| 82.5 | 25.15 | | | | | | | | | | | | Sandstone, calareous, gray, with open stained diagonal bedding planes, Lost 0.2' at bottom DIP 75° TO 80° |
| | | | | 83.5 | 25.45 | | | | | | | | CORRECTED DEPTH 83.3 |
| | | 83.5 | 25.45 | | | | | | | | | | |
| | | | | 84.5 | 25.76 | RUN 8 RAN 1.0 REC 1.2 RQD 50% | | | | | | | |
| 85.0 | 25.91 | | | | | | | | | | | | BORING TERMINATED @ 84.5' 100% DWL |
| 87.5 | 26.67 | | | | | | | | | | | | |
| 90.0 | 27.43 | | | | | | | | | | | | |
| 92.5 | 28.19 | | | | | | | | | | | | |
| 95.0 | 28.96 | | | | | | | | | | | | |
| 97.5 | 29.72 | | | | | | | | | | | | |
| 100.0 | 30.48 | | | | | | | | | | | | |



REMARKS:

amec foster wheeler — GEOTECHNICAL BRANCH, NASHVILLE, TENNESSEE

LOG OF BORING B-48, SHEET 4 OF 4

PROJECT: ALCOA HIGHWAY WIDENING (SR-115) RETAINING WALLS 7 AND 8 — DRILLER: TRI-STATE DRILLING
PROJECT NO.: 7681-15-002 — ON-SITE REP.: WDS
BORING NO. / LOCATION: STA 6+010, 38.1 m Left — DRY ON COMPLETION ?: YES, PRIOR TO CORING
DATE: 7/30/2015-7/31/2015 — SURFACE ELEV.: 989.5 FT. 301.6 M
REFUSAL: DEPTH 53.0 FT. 16.2 M — ELEV. 936.5 FT. 285.4 M
SAMPLED: 53.0 FT. 16.2 M
TOP OF ROCK: DEPTH 53.0 FT. 16.2 M — ELEV. 936.5 FT. 285.4 M
BEGAN CORING: DEPTH 53.0 FT. 16.2 M — ELEV. 936.5 FT. 285.4 M
FOOTAGE CORED (LF): 25.0 FT. 7.6 M
BOTTOM OF HOLE: DEPTH 78.0 FT. 23.8 M — ELEV. 911.5 FT. 277.8 M
BORING ADVANCED BY: CORING — POWER AUGERING: X — WASHBORING:

WATER LEVEL DATA (IF APPLICABLE)
COMPLETION: DEPTH FT. M — ELEV. FT. M
AFTER 24 HRS.: DEPTH FT. M — ELEV. FT. M
LDW AT: DEPTH FT. M — ELEV. FT. M

| STRATUM DEPTH FT. | STRATUM DEPTH M. | SAMPLE DEPTH FROM FT. | FROM M. | TO FT. | TO M. | SAMPLE OR RUN NO. | SAMPLE TYPE | SPLE/CORE RECOV'D (IN.) | SPT VALUES 6" | 6" | 6" | N | DESCRIPTION |
|---|---|---|---|---|---|---|---|---|---|---|---|---|---|
| 62.5 | 19.05 | | | | | | | | | | | | Sandstone, calcareous, siliceous, lt gray w/siltstone variably stained, leached, weathered with open stained bedding planes and partially healed diagonal fractures |
| | | 62.8 | 19.14 | 62.8 | 19.14 | RUN 3 RAN 5.2 REC 5.2 RQD 35% | | | | | | | |
| 65.0 | 19.81 | | | | | | | | | | | | |
| 67.5 | 20.57 | | | 68.0 | 20.73 | | | | | | | | |
| | | 68.0 | 20.73 | | | RUN 4 RAN 5.0 REC 5.0 RQD 78% | | | | | | | |
| 70.0 | 21.33 | | | | | | | | | | | | |
| 72.5 | 22.10 | | | 73.0 | 22.25 | | | | | | | | |
| | | 73.0 | 22.25 | | | RUN 5 RAN 5.0 REC 4.9 RQD 84% | | | | | | | |
| 75.0 | 22.86 | | | 75.2 | 22.92 | | | | | | | | $q_u$=189.8 MPa, $\gamma$=26.79 kN/m$^3$ stained leached weathered zone 77.8' to 78.0' |
| 77.5 | 23.62 | | | | | | | | | | | | |
| | | | | 78.0 | 23.77 | | | | | | | | |
| 80.0 | 24.38 | | | | | | | | | | | | BORING TERMINATED AT 78.0' 100% DWR |

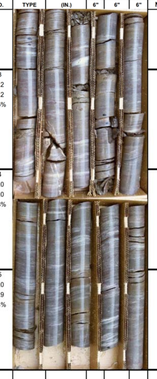

REMARKS: BORNG LOCATED IN 6 FOOT CUT

amec foster wheeler — GEOTECHNICAL BRANCH, NASHVILLE, TENNESSEE

LOG OF BORING B-49, SHEET 2 OF 5

PROJECT: ALCOA HIGHWAY WIDENING (SR-115) RETAINING WALLS 7 AND 8 — DRILLER: TRI-STATE DRILLING
PROJECT NO.: 7681-15-002 — ON-SITE REP.: WDS
BORING NO. / LOCATION: STA 6+070, 46.6 m Left — DRY ON COMPLETION ?: YES, PRIOR TO CORING
DATE: 8-14-2015 TO 8-19-2015 — SURFACE ELEV.: 1019.5 FT. 310.7 M
REFUSAL: DEPTH 48.5 FT. 14.8 M — ELEV. 971.0 FT. 296.0 M
SAMPLED: 48.5 FT. 14.8 M
TOP OF ROCK: DEPTH 48.5 FT. 14.8 M — ELEV. 971.0 FT. 296.0 M
BEGAN CORING: DEPTH 48.5 FT. 14.8 M — ELEV. 971.0 FT. 296.0 M
FOOTAGE CORED (LF): 36.0 FT. 11.0 M
BOTTOM OF HOLE: DEPTH 84.5 FT. 25.8 M — ELEV. 935.0 FT. 285.0 M
BORING ADVANCED BY: CORING — POWER AUGERING: X — WASHBORING:

WATER LEVEL DATA (IF APPLICABLE)
COMPLETION: DEPTH FT. M — ELEV. FT. M
AFTER 24 HRS.: DEPTH FT. M — ELEV. FT. M
LDW AT: DEPTH 65.0 FT. 19.8 M — ELEV. 954.5 FT. 290.9 M

| STRATUM DEPTH FT. | STRATUM DEPTH M. | SAMPLE DEPTH FROM FT. | FROM M. | TO FT. | TO M. | SAMPLE OR RUN NO. | SAMPLE TYPE | SPLE/CORE RECOV'D (IN.) | SPT VALUES 6" | 6" | 6" | N | DESCRIPTION |
|---|---|---|---|---|---|---|---|---|---|---|---|---|---|
| | | 20.0 | 6.10 | | | | | | | | | | |
| 22.5 | 6.86 | | | | | | A | | | | | | |
| | | 23.5 | 7.163 | 23.5 | 7.16 | | | | | | | | |
| 25.0 | 7.62 | | | | | S-7 | SS | 16 | 5 | 5 | 3 | 8 | DO5, yellowish-brown (Decomposed Siltstone) |
| | | 25.0 | 7.62 | 25.0 | 7.62 | | | | | | | | |
| 27.5 | 8.38 | | | | | | A | | | | | | |
| | | 28.5 | 8.687 | 28.5 | 8.69 | | | | | | | | |
| 30.0 | 9.14 | | | | | S-8 | SS | 18 | 4 | 6 | 6 | 12 | DO5, slightly silty, dark brown (Medium Dense)(Decomposed Sandstone) |
| | | 30.0 | 9.144 | 30.0 | 9.14 | | | | | | | | |
| 32.5 | 9.91 | | | | | | A | | | | | | |
| | | 33.5 | 10.21 | 33.5 | 10.21 | | | | | | | | |
| 35.0 | 10.67 | | | | | S-9 | SS | 18 | 3 | 4 | 5 | 9 | DO8, (Loose) |
| | | 35.0 | 10.67 | 35.0 | 10.67 | | | | | | | | |
| 37.5 | 11.43 | | | | | | A | | | | | | |
| | | 38.5 | 11.73 | 38.5 | 11.73 | | | | | | | | |
| 40.0 | 12.19 | | | 40.0 | 12.19 | S-10 | SS | 18 | 4 | 5 | 5 | 10 | DO9 |

REMARKS: Continued On Page 3.

amec foster wheeler — GEOTECHNICAL BRANCH, NASHVILLE, TENNESSEE

LOG OF BORING B-49, SHEET 4 OF 5

PROJECT: ALCOA HIGHWAY WIDENING (SR-115) RETAINING WALLS 7 AND 8 — DRILLER: TRI-STATE DRILLING
PROJECT NO.: 7681-15-002 — ON-SITE REP.: WDS
BORING NO. / LOCATION: STA 6+070, 46.6 m Left — DRY ON COMPLETION ?: YES, PRIOR TO CORING
DATE: 8-14-2015 TO 8-19-2015 — SURFACE ELEV.: 1019.5 FT. 310.7 M
REFUSAL: DEPTH 48.5 FT. 14.8 M — ELEV. 971.0 FT. 296.0 M
SAMPLED: 48.5 FT. 14.8 M
TOP OF ROCK: DEPTH 48.5 FT. 14.8 M — ELEV. 971.0 FT. 296.0 M
BEGAN CORING: DEPTH 48.5 FT. 14.8 M — ELEV. 971.0 FT. 296.0 M
FOOTAGE CORED (LF): 36.0 FT. 11.0 M
BOTTOM OF HOLE: DEPTH 84.5 FT. 25.8 M — ELEV. 935.0 FT. 285.0 M
BORING ADVANCED BY: CORING — POWER AUGERING: X — WASHBORING:

WATER LEVEL DATA (IF APPLICABLE)
COMPLETION: DEPTH FT. M — ELEV. FT. M
AFTER 24 HRS.: DEPTH FT. M — ELEV. FT. M
LDW AT: DEPTH 65.0 FT. 19.8 M — ELEV. 954.5 FT. 290.9 M

| STRATUM DEPTH FT. | STRATUM DEPTH M. | SAMPLE DEPTH FROM FT. | FROM M. | TO FT. | TO M. | SAMPLE OR RUN NO. | SAMPLE TYPE | SPLE/CORE RECOV'D (IN.) | SPT VALUES 6" | 6" | 6" | N | DESCRIPTION |
|---|---|---|---|---|---|---|---|---|---|---|---|---|---|
| 62.5 | 19.05 | 60.0 | 18.29 | | | | | | | | | | |
| | | | | 63.5 | 19.35 | | | | | | | | 100% DWL @ 65.0' Sandstone, calcareous, gray to wea. reddish-brown variably fractured |
| | | 63.5 | 19.35 | | | RUN 4 RAN 5.0 REC 4.8 RQD 72% | | | | | | | |
| 65.0 | 19.81 | | | | | | | | | | | | |
| 67.5 | 20.57 | | | 68.5 | 20.88 | | | | | | | | CORRECTED DEPTH 68.3 |
| | | 68.5 | 20.88 | | | RUN 5 RAN 5.0 REC 5.2 RQD 100% | | | | | | | |
| 70.0 | 21.33 | | | | | | | | | | | | open stained bedding plane 71.4 |
| 72.5 | 22.10 | | | 73.5 | 22.40 | | | | | | | | |
| | | 73.5 | 22.4 | | | RUN 6 RAN 5.0 REC 5.0 RED= 78% | | | | | | | |
| 75.0 | 22.86 | | | | | | | | | | | | --- open stained diagonal fractures |
| 77.5 | 23.62 | | | 78.5 | 23.93 | | | | | | | | |
| | | 78.5 | 23.93 | | | | | | | | | | |
| 80.0 | 24.38 | | | 80.0 | 24.38 | | | | | | | | |

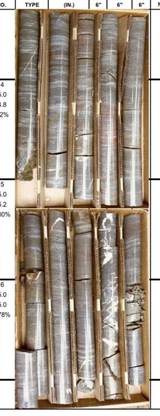

REMARKS: Continued On Page 5.

amec foster wheeler — GEOTECHNICAL BRANCH, NASHVILLE, TENNESSEE

LOG OF BORING B-50, SHEET 1 OF 4

PROJECT: ALCOA HIGHWAY WIDENING (SR-115) RETAINING WALLS 7 AND 8 — DRILLER: TRI-STATE DRILLING
PROJECT NO.: 7681-15-002 — ON-SITE REP.: N. Brown
BORING NO. / LOCATION: B-50, STA 6+070, 37.3 m L — DRY ON COMPLETION ?: YES, PRIOR TO CORING
DATE: 8/19/2015 TO 8/20/2015 — SURFACE ELEV.: 1016.4 FT. 309.8 M
REFUSAL: DEPTH 18.9 FT. 5.8 M — ELEV. 997.5 FT. 304.0 M
SAMPLED: 15.0 FT. 4.6 M
TOP OF ROCK: DEPTH 18.9 FT. 5.8 M — ELEV. 997.5 FT. 304.0 M
BEGAN CORING: DEPTH 18.9 FT. 5.8 M — ELEV. 997.5 FT. 304.0 M
FOOTAGE CORED (LF): 61.1 FT. 18.6 M
BOTTOM OF HOLE: DEPTH 80.0 FT. 24.4 M — ELEV. 936.4 FT. 285.4 M
BORING ADVANCED BY: CORING — POWER AUGERING: X — WASHBORING:

WATER LEVEL DATA (IF APPLICABLE)
COMPLETION: DEPTH FT. M — ELEV. FT. M
AFTER 24 HRS.: DEPTH FT. M — ELEV. FT. M
LDW AT: DEPTH 18.9 FT. 5.8 M — ELEV. 997.5 FT. 304.0 M

| STRATUM DEPTH FT. | STRATUM DEPTH M. | SAMPLE DEPTH FROM FT. | FROM M. | TO FT. | TO M. | SAMPLE OR RUN NO. | SAMPLE TYPE | SPLE/CORE RECOV'D (IN.) | SPT VALUES 6" | 6" | 6" | N | STRATUM DESCRIPTION |
|---|---|---|---|---|---|---|---|---|---|---|---|---|---|
| | | 0.0 | 0.00 | | | | A | | | | | | |
| | | 1.0 | 0.30 | 1.0 | 0.30 | S-1 | SS | 12 | 3 | 5 | 6 | 11 | Clay, very sandy, brown (Moist)(Stiff) |
| 2.5 | 0.76 | | | 2.5 | 0.76 | | A | | | | | | |
| | | 2.5 | 0.76 | | | | | | | | | | |
| | | 3.5 | 1.07 | 3.5 | 1.07 | S-2 | SS | 16 | 3 | 5 | 5 | 10 | DO1 |
| 5.0 | 1.52 | | | | | | A | | | | | | |
| | | 5.0 | 1.52 | 5.0 | 1.52 | | | | | | | | |
| | | 6.0 | 1.83 | 6.0 | 1.83 | S-3 | SS | 14 | 3 | 4 | 4 | 8 | DO1 |
| 7.5 | 2.29 | | | | | | A | | | | | | |
| | | 7.5 | 2.29 | 7.5 | 2.29 | | | | | | | | Sand, clayey, dark brown (Moist)(Loose) |
| | | 8.5 | 2.59 | 8.5 | 2.59 | S-4 | SS | 18 | 3 | 2 | 2 | 4 | |
| 10.0 | 3.05 | | | | | | A | | | | | | |
| | | | | 10.0 | 3.05 | | | | | | | | |
| 12.5 | 3.81 | | | | | | | | | | | | |
| | | 13.5 | 4.11 | 13.5 | 4.11 | | | | | | | | |
| 15.0 | 4.57 | | | | | S-5 | SS | 16 | 2 | 3 | 2 | 5 | DO4, yellow to DO4, slightly clayey, dark brown |
| | | 15.0 | 4.57 | 15.0 | 4.57 | | A | | | | | | |
| 17.5 | 5.33 | | | | | | | | | | | | |
| | | 18.5 | 5.64 | 18.5 | 5.64 | RUN 1 RAN 1.1 REC 1.1 RQD 55% | | | | | | | AUGER REFUSAL @ 18.9'. DRY PRIOR TO CORING BEGIN NQ CORING @ 18.9', 100 DWL SEE RUN 2 FOR DESCRIPTION |
| 20.0 | 6.10 | | | 20.0 | 6.10 | | | | | | | | |

REMARKS: Con't sheet 2

CONTRACTOR NOTES:

1. THE GEOTECHNICAL REPORT WHICH INCLUDES DETAILED BORING RECORDS, SOIL AND ROCK TESTING DATA IS AVAILABLE UPON REQUEST. ROCK CORE SAMPLES ARE AVAILABLE FOR INSPECTION BY THE CONTRACTOR.

2. IT IS THE RESPONSIBILITY OF THE CONTRACTOR TO REVIEW THE PLANS, GEOTECHNICAL REPORT, AND BORING LOGS TO BECOME FAMILIAR WITH THE SUBSURFACE CONDITIONS PERTINENT TO THE ASSOCIATED WORK TO BE CONDUCTED BY THE CONTRACTOR. THE CONTRACTOR SHOULD ALSO CONSIDER THEIR EXPERIENCE IN THE PROJECT'S GEOLOGIC AND SUBSURFACE SETTING AND THEIR EXPERIENCE IN DEALING WITH VARIABLE SUBSURFACE CONDITIONS ACROSS A PROJECT SITE TO BASE THEIR BID UPON AND DECISIONS REGARDING APPROPRIATE EQUIPMENT TO BE UTILIZED.

PRELIMINARY PLANS

SEALED BY

TENNESSEE METRIC D.O.T.

COORDINATES ARE NAD/83(1995), ARE DATUM ADJUSTED BY THE FACTOR OF 1.000 AND TIED TO THE TGRN. ALL ELEVATIONS ARE REFERENCED TO THE NAVD 1988.

STATE OF TENNESSEE
DEPARTMENT OF TRANSPORTATION

SOIL BORING LOGS
RETAINING WALLS
NO. 7 AND 8

SCALE: AS NOTED

9/9/2015
R:_Infrastructure Project Files\2015 Infra Projects\7681-15-002 ALCOA Hwy (SR 115) WALLS 7 AND 8\06 - CADD\03-23-RETAINING WALL NO. 7 AND 8 SOIL BORING LOGS.SHT

| TYPE | YEAR | PROJECT NO. | SHEET NO. |
|---|---|---|---|
| CONST. | 2015 | 47026-3279-14 | ---- |

amec foster wheeler — GEOTECHNICAL BRANCH, NASHVILLE, TENNESSEE — LOG OF BORING B-50, SHEET 2 OF 4

PROJECT: ALCOA HIGHWAY WIDENING (SR-115) RETAINING WALLS 7 AND 8 — DRILLER: TRI-STATE DRILLING
PROJECT NO.: 7681-15-002 — ON-SITE REP.: N. Brown
BORING NO. / LOCATION: B-50, STA 6+070, 37.3 m L — DRY ON COMPLETION ?: YES, PRIOR TO CORING
DATE: 8/19/2015 TO 8/20/2015 — SURFACE ELEV.: 1016.4 FT. 309.8 M
REFUSAL: DEPTH 18.9 FT. 5.8 M — ELEV. 997.5 FT. 304.0 M
SAMPLED: 15.0 FT. 4.6 M
TOP OF ROCK: DEPTH 18.9 FT. 5.8 M — ELEV. 997.5 FT. 304.0 M
BEGAN CORING: DEPTH 18.9 FT. 5.8 M — ELEV. 997.5 FT. 304.0 M
FOOTAGE CORED (LF): 61.1 FT. 18.6 M
BOTTOM OF HOLE: DEPTH 80.0 FT. 24.4 M — ELEV. 936.4 FT. 285.4 M
BORING ADVANCED BY: CORING — POWER AUGERING: X — WASHBORING:

WATER LEVEL DATA (IF APPLICABLE): COMPLETION: DEPTH FT. M; ELEV. FT. M. AFTER 24 HRS.: DEPTH FT. M; ELEV. FT. M. LDW AT: DEPTH 18.9 FT. 5.8 M; ELEV. 997.5 FT. 304.0 M

| STRATUM DEPTH FT. | STRATUM DEPTH M. | SAMPLE DEPTH FROM FT. | SAMPLE DEPTH FROM M. | SAMPLE DEPTH TO FT. | SAMPLE DEPTH TO M. | SAMPLE OR RUN NO. | SAMPLE TYPE | SPLE/CORE RECOV'D (IN.) | SPT VALUES 6" | 6" | 6" | N | DESCRIPTION |
|---|---|---|---|---|---|---|---|---|---|---|---|---|---|
| 22.5 | 6.86 | 20.0 | 6.10 | | | RUN 2 RAN 2.0 REC 5.0 RQD 74% | | | | | | | Sandstone, calcareous, gray to wea. reddish-brown variably stained, leached, weathered with open stained and leached fractures and healed white calcite filled fractures, few open stained and leached bedding plane fractures Dip 80° to 90° |
| 25.0 | 7.62 | 25.0 | 7.62 | 25.0 | 7.62 | RUN 3 RAN 5.0 REC 3.9 RQD 64% | | | | | | | Dip 80° to 90° |
| | | | | | | | | | | | | | --- void from 29.2 to 29.5 |
| 30.0 | 9.14 | 30.0 | 9.144 | 30.0 | 9.14 | RUN 4 RAN 5.0 REC 0.0 RQD 0% | | | | | | | No Recovery. Water Pressure. Probably very sandy clay |
| 35.0 | 10.67 | 35.0 | 10.67 | 35.0 | 10.67 | RUN 5 RAN 5.0 REC 0.0 RQD 0% | | | | | | | |
| 40.0 | 12.19 | | | 40.0 | 12.19 | | | | | | | | |

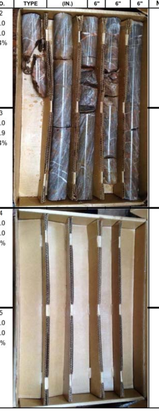

REMARKS: Con't sheet 2

amec foster wheeler — GEOTECHNICAL BRANCH, NASHVILLE, TENNESSEE — LOG OF BORING B-50, SHEET 4 OF 4

PROJECT: ALCOA HIGHWAY WIDENING (SR-115) RETAINING WALLS 7 AND 8 — DRILLER: TRI-STATE DRILLING
PROJECT NO.: 7681-15-002 — ON-SITE REP.: N. Brown
BORING NO. / LOCATION: B-50, STA 6+070, 37.3 m L — DRY ON COMPLETION ?: YES, PRIOR TO CORING
DATE: 8/19/2015 TO 8/20/2015 — SURFACE ELEV.: 1016.4 FT. 309.8 M
REFUSAL: DEPTH 18.9 FT. 5.8 M — ELEV. 997.5 FT. 304.0 M
SAMPLED: 15.0 FT. 4.6 M
TOP OF ROCK: DEPTH 18.9 FT. 5.8 M — ELEV. 997.5 FT. 304.0 M
BEGAN CORING: DEPTH 18.9 FT. 5.8 M — ELEV. 997.5 FT. 304.0 M
FOOTAGE CORED (LF): 61.1 FT. 18.6 M
BOTTOM OF HOLE: DEPTH 80.0 FT. 24.4 M — ELEV. 936.4 FT. 285.4 M
BORING ADVANCED BY: CORING — POWER AUGERING: X — WASHBORING:

WATER LEVEL DATA (IF APPLICABLE): COMPLETION: DEPTH FT. M; ELEV. FT. M. AFTER 24 HRS.: DEPTH FT. M; ELEV. FT. M. LDW AT: DEPTH 18.9 FT. 5.8 M; ELEV. 997.5 FT. 304.0 M

| STRATUM DEPTH FT. | STRATUM DEPTH M. | SAMPLE DEPTH FROM FT. | SAMPLE DEPTH FROM M. | SAMPLE DEPTH TO FT. | SAMPLE DEPTH TO M. | SAMPLE OR RUN NO. | SAMPLE TYPE | SPLE/CORE RECOV'D (IN.) | SPT VALUES 6" | 6" | 6" | N | DESCRIPTION |
|---|---|---|---|---|---|---|---|---|---|---|---|---|---|
| 62.5 | 19.05 | 60.0 | 18.29 | | | | | | | | | | No Recovery. Water Pressure. Probably very sandy clay |
| 65.0 | 19.81 | | | 65.0 | 19.81 | | | | | | | | |
| | | 65.0 | 19.81 | | | RUN 11 RAN 5.0 REC 0.7 RQD 8% | | | | | | | |
| 67.5 | 20.57 | | | | | | | | | | | | |
| 70.0 | 21.33 | | | 70.0 | 21.34 | | | | | | | | 69.3 - Sandstone, calcareous, gray to wea. reddish brown with open stained fracture, healed calcite filled fractures. |
| | | 70.0 | 21.34 | | | RUN 12 RAN 5.0 REC 5.0 RQD 100% | | | | | | | |
| 72.5 | 22.10 | | | | | | | | | | | | |
| 75.0 | 22.86 | | | 75.0 | 22.86 | | | | | | | | |
| | | 75.0 | 22.86 | | | RUN 13 RAN 5.0 REC 5.0 RQD 86% | | | | | | | |
| 77.5 | 23.62 | | | | | | | | | | | | 77.5' one open stained diagonal fracture |
| 80.0 | 24.38 | | | 80.0 | 24.38 | | | | | | | | CORING TERMINATED @ 80.0' 100% DWL |

REMARKS:

amec foster wheeler — GEOTECHNICAL BRANCH, NASHVILLE, TENNESSEE — LOG OF BORING B-51, SHEET 2 OF 2

PROJECT: ALCOA HIGHWAY WIDENING (SR-115) RETAINING WALLS 7 AND 8 — DRILLER: TRI-STATE DRILLING
PROJECT NO.: 7681-15-002 — ON-SITE REP.: N. Brown
BORING NO. / LOCATION: B-51, STA 6+100, 37.5m L — DRY ON COMPLETION ?: YES, PRIOR TO CORING
DATE: August 21, 2015 — SURFACE ELEV.: 1022.3 FT. 311.6 M
REFUSAL: DEPTH 16.7 FT. 5.1 M — ELEV. 1005.6 FT. 306.5 M
SAMPLED: 15.0 FT. 4.6 M
TOP OF ROCK: DEPTH 16.7 FT. 5.1 M — ELEV. 1005.6 FT. 306.5 M
BEGAN CORING: DEPTH 16.7 FT. 5.1 M — ELEV. 1005.6 FT. 306.5 M
FOOTAGE CORED (LF): 12.3 FT. 3.7 M
BOTTOM OF HOLE: DEPTH 29.0 FT. 8.8 M — ELEV. 993.3 FT. 302.8 M
BORING ADVANCED BY: CORING — POWER AUGERING: X — WASHBORING:

WATER LEVEL DATA (IF APPLICABLE): COMPLETION: DEPTH FT. M; ELEV. FT. M. AFTER 24 HRS.: DEPTH FT. M; ELEV. FT. M. LDW AT: DEPTH 16.7 FT. 5.1 M; ELEV. 1005.6 FT. 306.5 M

| STRATUM DEPTH FT. | STRATUM DEPTH M. | SAMPLE DEPTH FROM FT. | SAMPLE DEPTH FROM M. | SAMPLE DEPTH TO FT. | SAMPLE DEPTH TO M. | SAMPLE OR RUN NO. | SAMPLE TYPE | SPLE/CORE RECOV'D (IN.) | SPT VALUES 6" | 6" | 6" | N | DESCRIPTION |
|---|---|---|---|---|---|---|---|---|---|---|---|---|---|
| 22.5 | 6.86 | 20.0 | 6.10 | | | | | | | | | | Sandstone, calcareous, gray, few open stained, some leached, fractures, healed calcite filled fractures |
| | | | | 24.0 | 7.32 | | | | | | | | |
| 25.0 | 7.62 | 24.0 | 7.315 | | | RUN 3 RAN 5.0 REC 4.9 RQD 94% | | | | | | | |
| 27.5 | 8.38 | | | 29.0 | 8.84 | | | | | | | | |
| 30.0 | 9.14 | | | | | | | | | | | | CORING TERMINATED @ 8.8m 100% DWL |
| 32.5 | 9.91 | | | | | | | | | | | | |
| 35.0 | 10.67 | | | | | | | | | | | | |
| 37.5 | 11.43 | | | | | | | | | | | | |
| 40.0 | 12.19 | | | | | | | | | | | | |

REMARKS: Con't Sheet 2

amec foster wheeler — GEOTECHNICAL BRANCH, NASHVILLE, TENNESSEE — LOG OF BORING B-52, SHEET 2 OF 6

PROJECT: ALCOA HIGHWAY WIDENING (SR-115) RETAINING WALLS 7 AND 8 — DRILLER: TRI-STATE DRILLING
PROJECT NO.: 7681-15-002 — ON-SITE REP.: WDS
BORING NO. / LOCATION: STA 6+130, 54.5 m Left — DRY ON COMPLETION ?: YES
DATE: 8/11/2015 TO 8/14/2015 — SURFACE ELEV.: 1033.9 FT. 315.1 M
REFUSAL: DEPTH 30.0 FT. 9.1 M — ELEV. 1003.9 FT. 306.0 M
SAMPLED: 30.0 FT. 9.1 M
TOP OF ROCK: DEPTH 30.0 FT. 9.1 M — ELEV. 1003.9 FT. 306.0 M
BEGAN CORING: DEPTH 30.0 FT. 9.1 M — ELEV. 1003.9 FT. 306.0 M
FOOTAGE CORED (LF): 90.0 FT. 27.4 M
BOTTOM OF HOLE: DEPTH 120.0 FT. 36.6 M — ELEV. 913.9 FT. 278.6 M
BORING ADVANCED BY: CORING — POWER AUGERING: X — WASHBORING:

WATER LEVEL DATA (IF APPLICABLE): COMPLETION: DEPTH FT. M; ELEV. FT. M. AFTER 24 HRS.: DEPTH FT. M; ELEV. FT. M. LDW AT: DEPTH 30.0 FT. 9.1 M; ELEV. 1003.9 FT. 306.0 M

| STRATUM DEPTH FT. | STRATUM DEPTH M. | SAMPLE DEPTH FROM FT. | SAMPLE DEPTH FROM M. | SAMPLE DEPTH TO FT. | SAMPLE DEPTH TO M. | SAMPLE OR RUN NO. | SAMPLE TYPE | SPLE/CORE RECOV'D (IN.) | SPT VALUES 6" | 6" | 6" | N | DESCRIPTION |
|---|---|---|---|---|---|---|---|---|---|---|---|---|---|
| 22.5 | 6.86 | 20.0 | 6.10 | | | | A | | | | | | |
| | | 23.5 | 7.163 | | | | | | | | | | |
| | | | | 23.5 | 7.16 | | | | | | | | |
| 25.0 | 7.62 | 25.0 | 7.62 | | | S-7 | SS | 14 | 2 | 2 | 2 | 4 | DO6 (moist)(Very Loose) (Decomposed Sandstone/ Siltstone) |
| | | | | 25.0 | 7.62 | | | | | | | | |
| | | | | | | | A | | | | | | |
| 27.5 | 8.38 | | | | | | | | | | | | |
| | | | | 28.5 | 8.69 | | | | | | | | |
| | | 28.5 | 8.687 | | | | | | | | | | |
| | | | | 29.5 | 8.99 | S-8 | SS | 8 | 1 | 50 | | 50 | |
| | | 29.5 | 8.992 | 30.0 | 9.14 | | A | | | | | | AUGER REFUSAL @ 30.0', DRY PRIOR TO CORING |
| 30.0 | 9.14 | 30.0 | 9.144 | | | RUN 1 RAN 5.0 REC 3.7 RQD 44% | | | | | | | BEGIN NQ CORING @ 30.0', 100% DWL |
| | | | | 31.5 | 9.60 | | | | | | | | $q_u$=183.4 MPa, $\gamma$=26.62 kN/m$^3$ |
| 32.5 | 9.91 | | | | | | | | | | | | Sandstone, calcareous, siliceous, gray, variably stained, leached weathered, with open cavity 31.1 to 31.5 and 34.0 to 35.0 |
| 35.0 | 10.67 | 35.0 | 10.67 | | | | | | | | | | |
| | | | | 35.0 | 10.67 | | | | | | | | |
| 37.5 | 11.43 | 35.0 | 10.67 | | | RUN 2 RAN 5.0 REC 0.1 RQD 0% | | | | | | | Coring on side wall of cavity. Probably filled with very sandy clay |
| 40.0 | 12.19 | | | 40.0 | 12.19 | | | | | | | | |

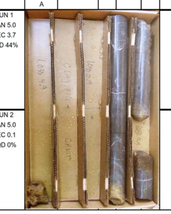

REMARKS: Continued On Page 3.

amec foster wheeler — GEOTECHNICAL BRANCH, NASHVILLE, TENNESSEE — LOG OF BORING B-50, SHEET 3 OF 4

PROJECT: ALCOA HIGHWAY WIDENING (SR-115) RETAINING WALLS 7 AND 8 — DRILLER: TRI-STATE DRILLING
PROJECT NO.: 7681-15-002 — ON-SITE REP.: N. Brown
BORING NO. / LOCATION: B-50, STA 6+070, 37.3 m L — DRY ON COMPLETION ?: YES, PRIOR TO CORING
DATE: 8/19/2015 TO 8/20/2015 — SURFACE ELEV.: 1016.4 FT. 309.8 M
REFUSAL: DEPTH 18.9 FT. 5.8 M — ELEV. 997.5 FT. 304.0 M
SAMPLED: 15.0 FT. 4.6 M
TOP OF ROCK: DEPTH 18.9 FT. 5.8 M — ELEV. 997.5 FT. 304.0 M
BEGAN CORING: DEPTH 18.9 FT. 5.8 M — ELEV. 997.5 FT. 304.0 M
FOOTAGE CORED (LF): 61.1 FT. 18.6 M
BOTTOM OF HOLE: DEPTH 80.0 FT. 24.4 M — ELEV. 936.4 FT. 285.4 M
BORING ADVANCED BY: CORING — POWER AUGERING: X — WASHBORING:

WATER LEVEL DATA (IF APPLICABLE): COMPLETION: DEPTH FT. M; ELEV. FT. M. AFTER 24 HRS.: DEPTH FT. M; ELEV. FT. M. LDW AT: DEPTH 18.9 FT. 5.8 M; ELEV. 997.5 FT. 304.0 M

| STRATUM DEPTH FT. | STRATUM DEPTH M. | SAMPLE DEPTH FROM FT. | SAMPLE DEPTH FROM M. | SAMPLE DEPTH TO FT. | SAMPLE DEPTH TO M. | SAMPLE OR RUN NO. | SAMPLE TYPE | SPLE/CORE RECOV'D (IN.) | SPT VALUES 6" | 6" | 6" | N | DESCRIPTION |
|---|---|---|---|---|---|---|---|---|---|---|---|---|---|
| 42.5 | 12.95 | 40.0 | 12.19 | | | RUN 6 RAN 5.0 REC 0.0 RQD 0% | | | | | | | No Recovery. Water Pressure. Probably very sandy clay |
| 45.0 | 13.72 | 45.0 | 13.72 | 45.0 | 13.72 | RUN 7 RAN 5.0 REC 0.0 RQD 0% | | | | | | | |
| 47.5 | 14.48 | | | | | | | | | | | | |
| 50.0 | 15.24 | 50.0 | 15.24 | 50.0 | 15.24 | RUN 8 RAN 5.0 REC 0.0 RQD 0% | | | | | | | |
| 52.5 | 16.00 | | | | | | | | | | | | |
| 55.0 | 16.76 | 55.0 | 16.76 | 55.0 | 16.76 | RUN 9 RAN 5.0 REC 0.0 RQD 0% | | | | | | | |
| 57.5 | 17.53 | | | | | | | | | | | | |
| 60.0 | 18.29 | | | 60.0 | 18.29 | | | | | | | | |

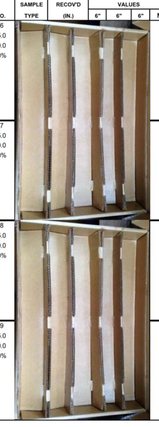

REMARKS: Con't sheet 2

amec foster wheeler — GEOTECHNICAL BRANCH, NASHVILLE, TENNESSEE — LOG OF BORING B-51, SHEET 1 OF 2

PROJECT: ALCOA HIGHWAY WIDENING (SR-115) RETAINING WALLS 7 AND 8 — DRILLER: TRI-STATE DRILLING
PROJECT NO.: 7681-15-002 — ON-SITE REP.: N. Brown
BORING NO. / LOCATION: B-51, STA 6+100, 37.5m L — DRY ON COMPLETION ?: YES, PRIOR TO CORING
DATE: August 21, 2015 — SURFACE ELEV.: 1022.3 FT. 311.6 M
REFUSAL: DEPTH 16.7 FT. 5.1 M — ELEV. 1005.6 FT. 306.5 M
SAMPLED: 15.0 FT. 4.6 M
TOP OF ROCK: DEPTH 16.7 FT. 5.1 M — ELEV. 1005.6 FT. 306.5 M
BEGAN CORING: DEPTH 16.7 FT. 5.1 M — ELEV. 1005.6 FT. 306.5 M
FOOTAGE CORED (LF): 12.3 FT. 3.7 M
BOTTOM OF HOLE: DEPTH 29.0 FT. 8.8 M — ELEV. 993.3 FT. 302.8 M
BORING ADVANCED BY: CORING — POWER AUGERING: X — WASHBORING:

WATER LEVEL DATA (IF APPLICABLE): COMPLETION: DEPTH FT. M; ELEV. FT. M. AFTER 24 HRS.: DEPTH FT. M; ELEV. FT. M. LDW AT: DEPTH 16.7 FT. 5.1 M; ELEV. 1005.6 FT. 306.5 M

| STRATUM DEPTH FT. | STRATUM DEPTH M. | SAMPLE DEPTH FROM FT. | SAMPLE DEPTH FROM M. | SAMPLE DEPTH TO FT. | SAMPLE DEPTH TO M. | SAMPLE OR RUN NO. | SAMPLE TYPE | SPLE/CORE RECOV'D (IN.) | SPT VALUES 6" | 6" | 6" | N | STRATUM DESCRIPTION |
|---|---|---|---|---|---|---|---|---|---|---|---|---|---|
| | | 0.0 | 0.00 | | | | A | | | | | | |
| | | | | 1.0 | 0.30 | | | | | | | | |
| | | 1.0 | 0.30 | | | S-1 | SS | 14 | 2 | 3 | 3 | 6 | Clay, sandy, reddish-brown (Moist)(Medium Stiff) |
| 2.5 | 0.76 | | | 2.5 | 0.76 | | | | | | | | |
| | | | | | | | A | | | | | | |
| | | | | 3.5 | 1.07 | | | | | | | | |
| | | 2.5 | 0.76 | | | | | | | | | | |
| | | | | 5.0 | 1.52 | | | | | | | | DO1, stiff |
| | | 3.5 | 1.07 | | | S-2 | SS | 16 | 4 | 5 | 6 | 11 | |
| 5.0 | 1.52 | | | | | | | | | | | | |
| | | | | 6.0 | 1.83 | | | | | | | | |
| | | 5.0 | 1.52 | | | | A | | | | | | |
| | | | | 7.5 | 2.29 | | | | | | | | |
| | | 6.0 | 1.83 | | | S-3 | SS | 14 | 2 | 2 | 1 | 3 | DO1, soft |
| 7.5 | 2.29 | | | | | | | | | | | | |
| | | | | 8.5 | 2.59 | | | | | | | | |
| | | 7.5 | 2.29 | | | | A | | | | | | |
| | | | | 10.0 | 3.05 | | | | | | | | Sand, clayey, brown (Moist)(Very Loose) |
| | | 8.5 | 2.59 | | | | | | | | | | |
| | | | | 12.0 | 3.66 | | | | | | | | Sand, slightly clayey, brown (Moist)(Very Loose) |
| 10.0 | 3.05 | | | | | S-4 | SS | 18 | 1 | 0 | 1 | 1 | |
| | | 10.0 | 3.05 | | | | A | | | | | | |
| 12.5 | 3.81 | | | | | | | | | | | | |
| | | | | 13.5 | 4.11 | | | | | | | | |
| | | 13.5 | 4.11 | | | | | | | | | | |
| | | | | 15.0 | 4.57 | | | | | | | | DO4 |
| 15.0 | 4.57 | | | | | S-5 | SS | 16 | 0 | 0 | 0 | 0 | |
| | | 15.0 | 4.57 | | | | A | | | | | | |
| | | 16.5 | 5.03 | | | | | | | | | | AUGER REFUSAL @ 16.7', DRY PRIOR TO CORING |
| | | | | | | RUN 1 RAN 2.3 REC 2.2 RQD 87% | | | | | | | BEGIN NQ CORING @ 16.7', 100 DWL |
| 17.5 | 5.33 | | | | | | | | | | | | |
| | | | | 19.0 | 5.79 | RUN 2 RAN 5.0 REC 5.0 RQD 88% | | | | | | | Sandstone, calcareous, gray, open stained, some leached, fractures, healed calcite filled fractures |
| | | 19.0 | 5.79 | | | | | | | | | | |
| | | | | 20.0 | 6.10 | | | | | | | | |
| 20.0 | 6.10 | | | | | | | | | | | | |

REMARKS: Con't Sheet 2

amec foster wheeler — GEOTECHNICAL BRANCH, NASHVILLE, TENNESSEE — LOG OF BORING B-52, SHEET 1 OF 6

PROJECT: ALCOA HIGHWAY WIDENING (SR-115) RETAINING WALLS 7 AND 8 — DRILLER: TRI-STATE DRILLING
PROJECT NO.: 7681-15-002 — ON-SITE REP.: WDS
BORING NO. / LOCATION: STA 6+130, 54.5 m Left — DRY ON COMPLETION ?: YES
DATE: 8/11/2015 TO 8/14/2015 — SURFACE ELEV.: 1033.9 FT. 315.1 M
REFUSAL: DEPTH 30.0 FT. 9.1 M — ELEV. 1003.9 FT. 306.0 M
SAMPLED: 30.0 FT. 9.1 M
TOP OF ROCK: DEPTH 30.0 FT. 9.1 M — ELEV. 1003.9 FT. 306.0 M
BEGAN CORING: DEPTH 30.0 FT. 9.1 M — ELEV. 1003.9 FT. 306.0 M
FOOTAGE CORED (LF): 90.0 FT. 27.4 M
BOTTOM OF HOLE: DEPTH 120.0 FT. 36.6 M — ELEV. 913.9 FT. 278.6 M
BORING ADVANCED BY: CORING — POWER AUGERING: X — WASHBORING:

WATER LEVEL DATA (IF APPLICABLE): COMPLETION: DEPTH FT. M; ELEV. FT. M. AFTER 24 HRS.: DEPTH FT. M; ELEV. FT. M. LDW AT: DEPTH 30.0 FT. 9.1 M; ELEV. 1003.9 FT. 306.0 M

| STRATUM DEPTH FT. | STRATUM DEPTH M. | SAMPLE DEPTH FROM FT. | SAMPLE DEPTH FROM M. | SAMPLE DEPTH TO FT. | SAMPLE DEPTH TO M. | SAMPLE OR RUN NO. | SAMPLE TYPE | SPLE/CORE RECOV'D (IN.) | SPT VALUES 6" | 6" | 6" | N | STRATUM DESCRIPTION |
|---|---|---|---|---|---|---|---|---|---|---|---|---|---|
| | | 0.0 | 0.00 | | | | A | | | | | | |
| | | | | 1.0 | 0.30 | | | | | | | | |
| | | 1.0 | 0.30 | | | S-1 | SS | 14 | 4 | 5 | 5 | 10 | Sand (F-M), silty, clayey, reddish-brown (moist)(Loose) |
| 2.5 | 0.76 | | | 2.5 | 0.76 | | | | | | | | |
| | | | | | | | A | | | | | | |
| | | | | 3.5 | 1.07 | | | | | | | | |
| | | 2.5 | 0.76 | | | | | | | | | | |
| | | | | 5.0 | 1.52 | | | | | | | | DO1 (Medium Dense) |
| | | 3.5 | 1.07 | | | S-2 | SS | 14 | 4 | 6 | 8 | 14 | |
| 5.0 | 1.52 | | | | | | | | | | | | |
| | | | | 6.0 | 1.83 | | | | | | | | |
| | | 5.0 | 1.52 | | | | A | | | | | | |
| | | | | 7.5 | 2.29 | | | | | | | | |
| | | 6.0 | 1.83 | | | S-3 | SS | 16 | 6 | 7 | 7 | 14 | DO2 |
| 7.5 | 2.29 | | | | | | | | | | | | |
| | | | | 8.5 | 2.59 | | | | | | | | |
| | | 7.5 | 2.29 | | | | A | | | | | | |
| | | | | 10.0 | 3.05 | | | | | | | | |
| | | 8.5 | 2.59 | | | S-4 | SS | 16 | 4 | 5 | 5 | 10 | Sand (F-M), silty, dark brown (moist)(Loose) |
| | | | | 10.0 | 3.05 | | | | | | | | |
| 10.0 | 3.05 | | | | | | | | | | | | |
| | | | | | | | A | | | | | | |
| 12.5 | 3.81 | | | | | | | | | | | | |
| | | | | 13.5 | 4.11 | | | | | | | | |
| | | 13.5 | 4.11 | | | | | | | | | | |
| | | | | 15.0 | 4.57 | | | | | | | | Sand (F-M), silty, dark brown/ yellowish-brown (moist)(Medium Dense) (Decomposed Sandstone/ Siltstone) |
| 15.0 | 4.57 | | | | | S-5 | SS | 16 | 4 | 7 | 6 | 13 | |
| | | 15.0 | 4.57 | | | | | | | | | | |
| | | | | | | | A | | | | | | |
| 17.5 | 5.33 | | | | | | | | | | | | |
| | | | | 18.5 | 5.64 | | | | | | | | |
| | | 18.5 | 5.64 | | | | | | | | | | |
| | | | | 20.0 | 6.10 | | | | | | | | |
| 20.0 | 6.10 | | | | | S-6 | SS | 16 | 3 | 2 | 2 | 4 | Sand (F-M), slightly silty, dark brown/ yellowish-brown (moist)(Very Loose) (Decomposed Sandstone/ Siltstone) |

REMARKS: Continued On Page 2.

amec foster wheeler — GEOTECHNICAL BRANCH, NASHVILLE, TENNESSEE — LOG OF BORING B-52, SHEET 3 OF 6

PROJECT: ALCOA HIGHWAY WIDENING (SR-115) RETAINING WALLS 7 AND 8 — DRILLER: TRI-STATE DRILLING
PROJECT NO.: 7681-15-002 — ON-SITE REP.: WDS
BORING NO. / LOCATION: STA 6+130, 54.5 m Left — DRY ON COMPLETION ?: YES
DATE: 8/11/2015 TO 8/14/2015 — SURFACE ELEV.: 1033.9 FT. 315.1 M
REFUSAL: DEPTH 30.0 FT. 9.1 M — ELEV. 1003.9 FT. 306.0 M
SAMPLED: 30.0 FT. 9.1 M
TOP OF ROCK: DEPTH 30.0 FT. 9.1 M — ELEV. 1003.9 FT. 306.0 M
BEGAN CORING: DEPTH 30.0 FT. 9.1 M — ELEV. 1003.9 FT. 306.0 M
FOOTAGE CORED (LF): 90.0 FT. 27.4 M
BOTTOM OF HOLE: DEPTH 120.0 FT. 36.6 M — ELEV. 913.9 FT. 278.6 M
BORING ADVANCED BY: CORING — POWER AUGERING: X — WASHBORING:

WATER LEVEL DATA (IF APPLICABLE): COMPLETION: DEPTH FT. M; ELEV. FT. M. AFTER 24 HRS.: DEPTH FT. M; ELEV. FT. M. LDW AT: DEPTH 30.0 FT. 9.1 M; ELEV. 1003.9 FT. 306.0 M

| STRATUM DEPTH FT. | STRATUM DEPTH M. | SAMPLE DEPTH FROM FT. | SAMPLE DEPTH FROM M. | SAMPLE DEPTH TO FT. | SAMPLE DEPTH TO M. | SAMPLE OR RUN NO. | SAMPLE TYPE | SPLE/CORE RECOV'D (IN.) | SPT VALUES 6" | 6" | 6" | N | DESCRIPTION |
|---|---|---|---|---|---|---|---|---|---|---|---|---|---|
| 42.5 | 12.95 | 40.0 | 12.19 | | | RUN 3 RAN 5.0 REC 0.0 RQD 0% | | | | | | | No recovery. No water pressure. Probable open cavity |
| 45.0 | 13.72 | 45.0 | 13.72 | 45.0 | 13.72 | RUN 4 RAN 5.0 REC 0.0 RQD 0% | | | | | | | |
| 47.5 | 14.48 | | | | | | | | | | | | --- Some water pressure. Probably very sandy clay |
| 50.0 | 15.24 | 50.0 | 15.24 | 50.0 | 15.24 | RUN 5 RAN 5.0 REC 0.0 RQD 0% | | | | | | | |
| 52.5 | 16.00 | | | | | | | | | | | | --- Water pressure. Probably very sandy clay |
| 55.0 | 16.76 | 55.0 | 16.76 | 55.0 | 16.76 | RUN 6 RAN 5.0 REC 0.0 RQD 0% | | | | | | | |
| 57.5 | 17.53 | | | | | | | | | | | | |
| 60.0 | 18.29 | | | 60.0 | 18.29 | | | | | | | | |

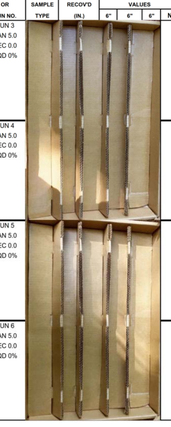

REMARKS: Continued On Page 4.

CONTRACTOR NOTES:

1. THE GEOTECHNICAL REPORT WHICH INCLUDES DETAILED BORING RECORDS, SOIL AND ROCK TESTING DATA IS AVAILABLE UPON REQUEST. ROCK CORE SAMPLES ARE AVAILABLE FOR INSPECTION BY THE CONTRACTOR.

2. IT IS THE RESPONSIBILITY OF THE CONTRACTOR TO REVIEW THE PLANS, GEOTECHNICAL REPORT, AND BORING LOGS TO BECOME FAMILIAR WITH THE SUBSURFACE CONDITIONS PERTINENT TO THE ASSOCIATED WORK TO BE CONDUCTED BY THE CONTRACTOR. THE CONTRACTOR SHOULD ALSO CONSIDER THEIR EXPERIENCE IN THE PROJECT'S GEOLOGIC AND SUBSURFACE SETTING AND THEIR EXPERIENCE IN DEALING WITH VARIABLE SUBSURFACE CONDITIONS ACROSS A PROJECT SITE TO BASE THEIR BID UPON AND DECISIONS REGARDING APPROPRIATE EQUIPMENT TO BE UTILIZED.

PRELIMINARY PLANS

SEALED BY

TENNESSEE METRIC D.O.T.

COORDINATES ARE NAD/83(1995), ARE DATUM ADJUSTED BY THE FACTOR OF 1.000 AND TIED TO THE TGRN. ALL ELEVATIONS ARE REFERENCED TO THE NAVD 1988.

STATE OF TENNESSEE
DEPARTMENT OF TRANSPORTATION

SOIL BORING LOGS
RETAINING WALLS
NO. 7 AND 8

SCALE: AS NOTED

9/9/2015
R:_Infrastructure Project Files\2015 Infra Projects\7681-15-002 ALCOA Hwy (SR 115) WALLS 7 AND 8\06 - CADD\03-23-RETAINING WALL NO. 7 AND 8 SOIL BORING LOGS.SHT

amec foster wheeler — GEOTECHNICAL BRANCH, NASHVILLE, TENNESSEE

LOG OF BORING B-52, SHEET 4 OF 6

PROJECT: ALCOA HIGHWAY WIDENING (SR-115) RETAINING WALLS 7 AND 8
PROJECT NO.: 7681-15-002
BORING NO. / LOCATION: STA 6+130, 54.5 m Left
DRILLER: TRI-STATE DRILLING
ON-SITE REP.: WDS
DRY ON COMPLETION ?: YES

DATE: 8/11/2015 TO 8/14/2015 — SURFACE ELEV. 1033.9 FT. 315.1 M
REFUSAL: DEPTH 30.0 FT. 9.1 M — ELEV. 1003.9 FT. 306.0 M
SAMPLED 30.0 FT. 9.1 M
TOP OF ROCK: DEPTH 30.0 FT. 9.1 M — ELEV. 1003.9 FT. 306.0 M
BEGAN CORING: DEPTH 30.0 FT. 9.1 M — ELEV. 1003.9 FT. 306.0 M
FOOTAGE CORED (LF): 90.0 FT. 27.4 M
BOTTOM OF HOLE: DEPTH 120.0 FT. 36.6 M — ELEV. 913.9 FT. 278.6 M

WATER LEVEL DATA (IF APPLICABLE)
COMPLETION: DEPTH FT. M — ELEV. FT. M
AFTER 24 HRS.: DEPTH FT. M — ELEV. FT. M
LDW AT: DEPTH 30.0 FT. 9.1 M — ELEV. 1003.9 FT. 306.0 M

BORING ADVANCED BY: CORING — POWER AUGERING: X — WASHBORING:

| STRATUM DEPTH FT. | STRATUM DEPTH M. | SAMPLE DEPTH FROM FT. | FROM M. | TO FT. | TO M. | SAMPLE OR RUN NO. | SAMPLE TYPE | SPLE/CORE RECOV'D (IN.) | SPT VALUES 6" | 6" | 6" | N | DESCRIPTION |
|---|---|---|---|---|---|---|---|---|---|---|---|---|---|
| 62.5 | 19.05 | 60.0 | 18.29 | | | RUN 7 RAN 5.0 REC 0.0 RQD 0% | | | | | | | No recovery. Small smear of very sandy clay, yellowish-brown, on inner barrel |
| 65.0 | 19.81 | 65.0 | 19.81 | 65.0 | 19.81 | RUN 8 RAN 5.0 REC 0.9 RQD 10% | | | | | | | |
| 67.5 | 20.57 | | | | | | | | | | | | 69.5- Sandstone, calcareous, siliceous, gray Sidewall core fragment to 69.5. |
| 70.0 | 21.33 | 70.0 | 21.34 | 70.0 | 21.34 | RUN 9 RAN 5.0 REC 4.9 RQD 70% | | | | | | | --- with open stained diagonal bedding planes 73.5 to 74.9 DIPS 20° TO 60° WITH 70° TO 80° FRACTURES |
| 72.5 | 22.10 | | | | | | | | | | | | |
| 75.0 | 22.86 | 75.0 | 22.86 | 75.0 | 22.86 | RUN 10 RAN 5.0 REC 5.0 RQD 78% | | | | | | | |
| 77.5 | 23.62 | | | | | | | | | | | | --- with open stained diagonal fractures 79.0 to 79.6. 79.6 to 80.0 broken during extraction |
| 80.0 | 24.38 | | | 80.0 | 24.38 | | | | | | | | |

REMARKS: Continued On Page 5.

amec foster wheeler — GEOTECHNICAL BRANCH, NASHVILLE, TENNESSEE

LOG OF BORING B-52, SHEET 6 OF 6

PROJECT: ALCOA HIGHWAY WIDENING (SR-115) RETAINING WALLS 7 AND 8
PROJECT NO.: 7681-15-002
BORING NO. / LOCATION: STA 6+130, 54.5 m Left
DRILLER: TRI-STATE DRILLING
ON-SITE REP.: WDS
DRY ON COMPLETION ?: YES

DATE: 8/11/2015 TO 8/14/2015 — SURFACE ELEV. 1033.9 FT. 315.1 M
REFUSAL: DEPTH 30.0 FT. 9.1 M — ELEV. 1003.9 FT. 306.0 M
SAMPLED 30.0 FT. 9.1 M
TOP OF ROCK: DEPTH 30.0 FT. 9.1 M — ELEV. 1003.9 FT. 306.0 M
BEGAN CORING: DEPTH 30.0 FT. 9.1 M — ELEV. 1003.9 FT. 306.0 M
FOOTAGE CORED (LF): 90.0 FT. 27.4 M
BOTTOM OF HOLE: DEPTH 120.0 FT. 36.6 M — ELEV. 913.9 FT. 278.6 M

WATER LEVEL DATA (IF APPLICABLE)
COMPLETION: DEPTH FT. M — ELEV. FT. M
AFTER 24 HRS.: DEPTH FT. M — ELEV. FT. M
LDW AT: DEPTH 30.0 FT. 9.1 M — ELEV. 1003.9 FT. 306.0 M

BORING ADVANCED BY: CORING — POWER AUGERING: X — WASHBORING:

| STRATUM DEPTH FT. | STRATUM DEPTH M. | SAMPLE DEPTH FROM FT. | FROM M. | TO FT. | TO M. | SAMPLE OR RUN NO. | SAMPLE TYPE | SPLE/CORE RECOV'D (IN.) | SPT VALUES 6" | 6" | 6" | N | DESCRIPTION |
|---|---|---|---|---|---|---|---|---|---|---|---|---|---|
| 102.5 | 31.24 | 100.0 | 30.48 | 103.2 | 31.46 | RUN 18 RAN 3.2 REC 3.2 RQD 34% | | | | | | | Sandstone, calcareous, gray, variably soft with open stained diagonal bedding planes, and open diagonal fractures DIPS 60° TO 70° |
| 105.0 | 32.00 | 103.2 | 31.46 | 105.0 | 32.00 | RUN 19 RAN 1.8 REC 1.8 RQD 0% | | | | | | | --- to greenish-gray, variably weathered variably soft and hard VERTICAL FRACTURES 70° TO 90° |
| 107.5 | 32.76 | 105.0 | 32 | 110.0 | 33.53 | RUN 20 RAN 5.0 REC 5.0 RQD 0% | | | | | | | partially healed diagonal fractures and diagonal bedding planes. Variably hard/ soft DIPS 70° TO 80° |
| 110.0 | 33.52 | 110.0 | 33.53 | 111.8 | 34.08 | RUN 21 RAN 5.0 REC 5.0 RQD 22% | | | | | | | $q_u$=119.3 MPa, $\gamma$=26.62 kN/m$^3$ vertical fractures DIPS 60° TO 90° |
| 112.5 | 34.29 | | | | | | | | | | | | |
| 115.0 | 35.05 | 115.0 | 35.05 | 115.0 | 35.05 | | | | | | | | |
| 117.5 | 35.81 | | | 120.0 | 36.58 | RUN 22 RAN 5.0 REC 4.8 RQD 20% | | | | | | | Sandstone, calcareous, gray to greenish-gray with open diagonal and vertical fractures |
| 120.0 | 36.57 | | | | | | | | | | | | Corrected Depth 119.8 |

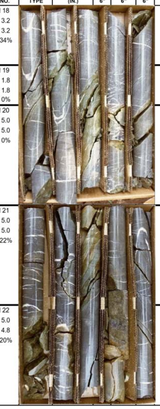

BORING TERMINATED @ 120.0', 100% DWL

REMARKS:

amec foster wheeler — GEOTECHNICAL BRANCH, NASHVILLE, TENNESSEE

LOG OF BORING B-53, SHEET 2 OF 2

PROJECT: ALCOA HIGHWAY WIDENING (SR-115) RETAINING WALLS 7 AND 8
PROJECT NO.: 7681-15-002
BORING NO. / LOCATION: Sta 6+160, 55.0 m Left
DRILLER: TRI-STATE DRILLING
ON-SITE REP.: WDS
DRY ON COMPLETION ?: YES, PRIOR TO CORING

DATE: August 24, 2015 — SURFACE ELEV. 1016.4 FT. 309.8 M
REFUSAL: DEPTH 8.0 FT. 2.4 M — ELEV. 1008.4 FT. 307.4 M
SAMPLED 8.0 FT. 2.4 M
TOP OF ROCK: DEPTH 8.0 FT. 2.4 M — ELEV. 1008.4 FT. 307.4 M
BEGAN CORING: DEPTH 8.0 FT. 2.4 M — ELEV. 1008.4 FT. 307.4 M
FOOTAGE CORED (LF): 30.0 FT. 9.1 M
BOTTOM OF HOLE: DEPTH 38.0 FT. 11.6 M — ELEV. 978.4 FT. 298.2 M

WATER LEVEL DATA (IF APPLICABLE)
COMPLETION: DEPTH FT. M — ELEV. FT. M
AFTER 24 HRS.: DEPTH FT. M — ELEV. FT. M
LDW AT: DEPTH FT. M — ELEV. FT. M

BORING ADVANCED BY: CORING — POWER AUGERING: X — WASHBORING:

| STRATUM DEPTH FT. | STRATUM DEPTH M. | SAMPLE DEPTH FROM FT. | FROM M. | TO FT. | TO M. | SAMPLE OR RUN NO. | SAMPLE TYPE | SPLE/CORE RECOV'D (IN.) | SPT VALUES 6" | 6" | 6" | N | DESCRIPTION |
|---|---|---|---|---|---|---|---|---|---|---|---|---|---|
| 22.5 | 6.86 | 20.0 | 6.10 | | | | | | | | | | open cavity 20.0 to 23.0, Loss 3.0 probable side wall coring probably sandy clay filled cavity |
| 25.0 | 7.62 | 23.0 | 7.01 | 23.0 | 7.01 | RUN 4 RAN 5.0 REC 0.0 RQD 0% | | | | | | | NO RECOVERY |
| 27.5 | 8.38 | 26.0 | 8.534 | 28.0 | 8.53 | RUN 5 RAN 5.0 REC 4.4 RQD 80% | | | | | | | |
| 30.0 | 9.14 | | | | | | | | | | | | |
| 32.5 | 9.91 | 30.0 | 10.06 | 33.0 | 10.06 | RUN 6 RAN 5.0 REC 4.7 RQD 76% | | | | | | | Sandstone, calcareous, gray to wea reddish-brown 32.0 to 32.9 open, stained, leached, Loss 0.6' w/healed vertical fractures, healed diagonal fractures |
| 35.0 | 10.67 | | | | | | | | | | | | |
| 37.5 | 11.43 | | | 38.0 | 11.58 | | | | | | | | |
| 40.0 | 12.19 | | | | | | | | | | | | BORING TERMINATED @ 38.0', 100% DWR |

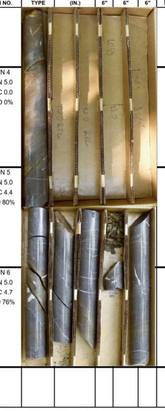

REMARKS:

amec foster wheeler — GEOTECHNICAL BRANCH, NASHVILLE, TENNESSEE

LOG OF BORING B-54, SHEET 2 OF 4

PROJECT: ALCOA HIGHWAY WIDENING (SR-115) RETAINING WALLS 7 AND 8
PROJECT NO.: 7681-15-002
BORING NO. / LOCATION: Sta 6+190, 40.1 m Left
DRILLER: TRI-STATE DRILLING
ON-SITE REP.: NB AND WDS
DRY ON COMPLETION ?: YES, PRIOR TO CORING

DATE: 8-22-2015 TO 8-24-2015 — SURFACE ELEV. 992.6 FT. 302.5 M
REFUSAL: DEPTH 16.2 FT. 4.9 M — ELEV. 976.4 FT. 297.6 M
SAMPLED 16.2 FT. 4.9 M
TOP OF ROCK: DEPTH 16.2 FT. 4.9 M — ELEV. 976.4 FT. 297.6 M
BEGAN CORING: DEPTH 16.2 FT. 4.9 M — ELEV. 976.4 FT. 297.6 M
FOOTAGE CORED (LF): 47.8 FT. 14.6 M
BOTTOM OF HOLE: DEPTH 64.0 FT. 19.5 M — ELEV. 928.6 FT. 283.0 M

WATER LEVEL DATA (IF APPLICABLE)
COMPLETION: DEPTH FT. M — ELEV. FT. M
AFTER 24 HRS.: DEPTH FT. M — ELEV. FT. M
LDW AT: DEPTH 17.0 FT. 5.2 M — ELEV. 975.6 FT. 297.4 M

BORING ADVANCED BY: CORE — POWER AUGERING: X — WASHBORING:

| STRATUM DEPTH FT. | STRATUM DEPTH M. | SAMPLE DEPTH FROM FT. | FROM M. | TO FT. | TO M. | SAMPLE OR RUN NO. | SAMPLE TYPE | SPLE/CORE RECOV'D (IN.) | SPT VALUES 6" | 6" | 6" | N | DESCRIPTION |
|---|---|---|---|---|---|---|---|---|---|---|---|---|---|
| 22.5 | 6.86 | 20.0 | 6.10 | | | RUN 2 RAN 5.0 REC 0.0 RQD 0% | | | | | | | NO RECOVERY Probably very sandy clay |
| 25.0 | 7.62 | 24.0 | 7.315 | 24.0 | | RUN 3 RAN 5.0 REC 0.0 RQD 0% | | | | | | | |
| 27.5 | 8.38 | | | 29.0 | 8.84 | | | | | | | | |
| 30.0 | 9.14 | 29.0 | 8.839 | | | RUN 4 RAN 5.0 REC 2.6 RQD 40% | | | | | | | |
| 32.5 | 9.91 | | | 34.0 | 10.36 | | | | | | | | Continue cavity to 31.4' 31.4' to 32.0' Weathered Sandstone Sandstone, calcareous,gray to wea reddish-brown |
| 35.0 | 10.67 | 34.0 | 10.36 | | | RUN 5 RAN 5.0 REC 2.7 RQD 36% | | | | | | | cavity 35.0' to 35.3'; cavity 35.5' to 35.6' |
| 37.5 | 11.43 | | | 39.0 | 11.89 | | | | | | | | NO RECOVERY 36.7' to 40.3' |
| 40.0 | 12.19 | 39.0 | 11.89 | 40.0 | 12.19 | | | | | | | | |

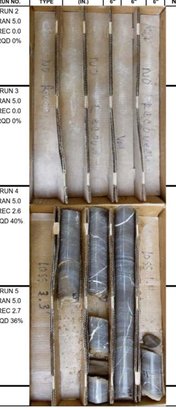

REMARKS: Continued On Page 3.

amec foster wheeler — GEOTECHNICAL BRANCH, NASHVILLE, TENNESSEE

LOG OF BORING B-52, SHEET 5 OF 6

PROJECT: ALCOA HIGHWAY WIDENING (SR-115) RETAINING WALLS 7 AND 8
PROJECT NO.: 7681-15-002
BORING NO. / LOCATION: STA 6+130, 54.5 m Left
DRILLER: TRI-STATE DRILLING
ON-SITE REP.: WDS
DRY ON COMPLETION ?: YES

DATE: 8/11/2015 TO 8/14/2015 — SURFACE ELEV. 1033.9 FT. 315.1 M
REFUSAL: DEPTH 30.0 FT. 9.1 M — ELEV. 1003.9 FT. 306.0 M
SAMPLED 30.0 FT. 9.1 M
TOP OF ROCK: DEPTH 30.0 FT. 9.1 M — ELEV. 1003.9 FT. 306.0 M
BEGAN CORING: DEPTH 30.0 FT. 9.1 M — ELEV. 1003.9 FT. 306.0 M
FOOTAGE CORED (LF): 90.0 FT. 27.4 M
BOTTOM OF HOLE: DEPTH 120.0 FT. 36.6 M — ELEV. 913.9 FT. 278.6 M

WATER LEVEL DATA (IF APPLICABLE)
COMPLETION: DEPTH FT. M — ELEV. FT. M
AFTER 24 HRS.: DEPTH FT. M — ELEV. FT. M
LDW AT: DEPTH 30.0 FT. 9.1 M — ELEV. 1003.9 FT. 306.0 M

BORING ADVANCED BY: CORING — POWER AUGERING: X — WASHBORING:

| STRATUM DEPTH FT. | STRATUM DEPTH M. | SAMPLE DEPTH FROM FT. | FROM M. | TO FT. | TO M. | SAMPLE OR RUN NO. | SAMPLE TYPE | SPLE/CORE RECOV'D (IN.) | SPT VALUES 6" | 6" | 6" | N | DESCRIPTION |
|---|---|---|---|---|---|---|---|---|---|---|---|---|---|
| 82.5 | 25.15 | 80.0 | 24.38 | | | RUN 11 RAN 5.0 REC 5.0 RQD 62% | | | | | | | Sandstone, calcareous, siliceous, gray, open stained, leached diagonal bedding planes 80.0 to 80.3 and 81.0 to 81.8, DIPS 55° TO 60° |
| 85.0 | 25.91 | | | 85.0 | 25.91 | | | | | | | | |
| 87.5 | 26.67 | 85.0 | 25.91 | 87.9 | 26.79 | RUN 12 RAN 3.0 REC 3.0 RQD 33% | | | | | | | --- diagonal fractures and diagonal bedding planes $q_u$=96.8 MPa, $\gamma$=26.55 kN/m$^3$ 85.4 to 86.1, and 86.6 to 87.6 DIPS 55° TO 60° |
| 90.0 | 27.43 | 88.0 | 26.82 | 88.0 | 26.82 | RUN 13 RAN 2.0 REC 1.8 RQD 40% | | | | | | | DIP 70° Corrected Depth 89.8 |
| 92.5 | 28.19 | 90.0 | 27.43 | 90.0 | 27.43 | RUN 14 RAN 4.0 REC 3.9 RQD 20% | | | | | | | --- high angle bedding plane fractures 70° TO 80° DIP 30° |
| 95.0 | 28.96 | 94.0 | 28.65 | 94.0 | 28.65 | RUN 15 RAN 1.3 REC 1.1 RQD 77% | | | | | | | --- with open cavity 93.7 to 94.0 |
| 97.5 | 29.72 | 95.0 | 28.96 | 97.0 | 29.57 | RUN 16 RAN 2.0 REC 1.9 RQD 85% | | | | | | | --- with mud filled cavity 96.8 to 97.0 |
| 100.0 | 30.48 | 97.0 | 29.57 | 100.0 | 30.48 | RUN 17 RAN 3.0 RQD 2.9 RQD 70% | | | | | | | Sandstone, calcareous, gray, variably stained, leached 98.5 to 98.9, and 99.6 to 100.0 |

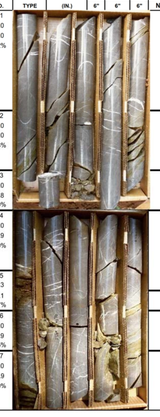

REMARKS: Continued On Page 6

amec foster wheeler — GEOTECHNICAL BRANCH, NASHVILLE, TENNESSEE

LOG OF BORING B-53, SHEET 1 OF 2

PROJECT: ALCOA HIGHWAY WIDENING (SR-115) RETAINING WALLS 7 AND 8
PROJECT NO.: 7681-15-002
BORING NO. / LOCATION: Sta 6+160, 55.0 m Left
DRILLER: TRI-STATE DRILLING
ON-SITE REP.: WDS
DRY ON COMPLETION ?: YES, PRIOR TO CORING

DATE: August 24, 2015 — SURFACE ELEV. 1016.4 FT. 309.8 M
REFUSAL: DEPTH 8.0 FT. 2.4 M — ELEV. 1008.4 FT. 307.4 M
SAMPLED 8.0 FT. 2.4 M
TOP OF ROCK: DEPTH 8.0 FT. 2.4 M — ELEV. 1008.4 FT. 307.4 M
BEGAN CORING: DEPTH 8.0 FT. 2.4 M — ELEV. 1008.4 FT. 307.4 M
FOOTAGE CORED (LF): 30.0 FT. 9.1 M
BOTTOM OF HOLE: DEPTH 38.0 FT. 11.6 M — ELEV. 978.4 FT. 298.2 M

WATER LEVEL DATA (IF APPLICABLE)
COMPLETION: DEPTH FT. M — ELEV. FT. M
AFTER 24 HRS.: DEPTH FT. M — ELEV. FT. M
LDW AT: DEPTH FT. M — ELEV. FT. M

BORING ADVANCED BY: CORING — POWER AUGERING: X — WASHBORING:

| STRATUM DEPTH FT. | STRATUM DEPTH M. | SAMPLE DEPTH FROM FT. | FROM M. | TO FT. | TO M. | SAMPLE OR RUN NO. | SAMPLE TYPE | SPLE/CORE RECOV'D (IN.) | SPT VALUES 6" | 6" | 6" | N | STRATUM DESCRIPTION |
|---|---|---|---|---|---|---|---|---|---|---|---|---|---|
| 2.5 | 0.76 | 0.0 | 0.00 | 1.0 | 0.30 | S-1 | A SS A | 14 | 3 | 7 | 10 | 17 | Clay, very sandy, silty, reddish-brown (moist)(Very Stiff) |
| 5.0 | 1.52 | 1.0 | 0.30 | 2.5 | 0.76 | S-2 | SS A | 16 | 4 | 6 | 5 | 11 | Sand (F-M), silty, slightly clayey, reddish-brown (moist)(Medium Dense) |
| 7.5 | 2.29 | 2.5 | 0.76 | 3.5 | 1.07 | S-3 | SS A | 12 | 1 | 2 | 2 | 4 | DO2, silty (very loose) |
| 10.0 | 3.05 | 3.5 | 1.07 | 5.0 | 1.52 | | | | | | | | AUGER REFUSAL @ 8.0', DRY ON COMPLETION |
| 12.5 | 3.81 | 5.0 | 1.52 | 6.0 | 1.83 | | | | | | | | BEGIN NQ CORING @ 8.0', 100% DWR Sandstone, calcareous, silicous, wea. gray to red-brown, w/open stained, diagonal bedding planes, w/healed vertical and diagonal fractures |
| 15.0 | 4.57 | 6.0 | 1.83 | 7.5 | 2.29 | | | | | | | | Sand filled cavity 8.9 to 11.0 |
| 17.5 | 5.33 | 7.5 | 2.29 | 8.0 | 2.44 | RUN 1 RAN 5.0 REC 3.0 RQD 40% | | | | | | | Sandstone, calcareous, silicous, weathered, gray to red-brn, w/open stained, diagonal bedding planes, with healed vertical and diagonal fractures |
| 20.0 | 6.10 | 8.0 | 2.44 | 13.0 | 3.96 | RUN 2 RAN 5.0 REC 2.4 RQD 38% | | | | | | | 13.0 to 13.5 open stained, leached joint |
| | | 13.0 | 3.96 | 18.0 | 5.49 | RUN 3 RAN 5.0 REC 0.6 RQD 0% | | | | | | | 15.4 to 19.4 probably sandy clay filled cavity Loss 2.6' |
| | | 18.0 | 5.49 | 20.0 | 6.10 | | | | | | | | Loss 1.4' Sandstone, calcareous, silicous, wea gray to red-brn, w/open stained, diagonal bedding planes, variably stained, leached, wea to 20' |

REMARKS: Continued On Page 2.

amec foster wheeler — GEOTECHNICAL BRANCH, NASHVILLE, TENNESSEE

LOG OF BORING B-54, SHEET 1 OF 4

PROJECT: ALCOA HIGHWAY WIDENING (SR-115) RETAINING WALLS 7 AND 8
PROJECT NO.: 7681-15-002
BORING NO. / LOCATION: Sta 6+190, 40.1 m Left
DRILLER: TRI-STATE DRILLING
ON-SITE REP.: NB AND WDS
DRY ON COMPLETION ?: YES, PRIOR TO CORING

DATE: 8-22-2015 TO 8-24-2015 — SURFACE ELEV. 992.6 FT. 302.5 M
REFUSAL: DEPTH 16.2 FT. 4.9 M — ELEV. 976.4 FT. 297.6 M
SAMPLED 16.2 FT. 4.9 M
TOP OF ROCK: DEPTH 16.2 FT. 4.9 M — ELEV. 976.4 FT. 297.6 M
BEGAN CORING: DEPTH 16.2 FT. 4.9 M — ELEV. 976.4 FT. 297.6 M
FOOTAGE CORED (LF): 47.8 FT. 14.6 M
BOTTOM OF HOLE: DEPTH 64.0 FT. 19.5 M — ELEV. 928.6 FT. 283.0 M

WATER LEVEL DATA (IF APPLICABLE)
COMPLETION: DEPTH FT. M — ELEV. FT. M
AFTER 24 HRS.: DEPTH FT. M — ELEV. FT. M
LDW AT: DEPTH 17.0 FT. 5.2 M — ELEV. 975.6 FT. 297.4 M

BORING ADVANCED BY: CORE — POWER AUGERING: X — WASHBORING:

| STRATUM DEPTH FT. | STRATUM DEPTH M. | SAMPLE DEPTH FROM FT. | FROM M. | TO FT. | TO M. | SAMPLE OR RUN NO. | SAMPLE TYPE | SPLE/CORE RECOV'D (IN.) | SPT VALUES 6" | 6" | 6" | N | STRATUM DESCRIPTION |
|---|---|---|---|---|---|---|---|---|---|---|---|---|---|
| 2.5 | 0.76 | 0.0 | 0.00 | 1.0 | 0.30 | S-1 | A SS A | | 6 | 7 | 7 | 14 | Clay, sandy, brown (Moist)(Stiff) |
| 5.0 | 1.52 | 1.0 | 0.30 | 2.5 | 0.76 | S-2 | SS A | | 5 | 5 | 6 | 11 | Sand (F-M), clayey, brown, (Moist)(Medium Dense) |
| 7.5 | 2.29 | 2.5 | 0.76 | 3.5 | 1.07 | S-3 | SS A | | 8 | 6 | 6 | 12 | DO2, brown to yellowish-brown (Moist)(Medium Dense) |
| 10.0 | 3.05 | 3.5 | 1.07 | 5.0 | 1.52 | S-4 | SS A | | 7 | 4 | 3 | 7 | DO2 (Loose) |
| 12.5 | 3.81 | 5.0 | 1.52 | 6.0 | 1.83 | | | | | | | | |
| 15.0 | 4.57 | 6.0 | 1.83 | 7.5 | 2.29 | | | | | | | | |
| 17.5 | 5.33 | 7.5 | 2.29 | 8.5 | 2.59 | S-5 | SS A | | 2 | 2 | 1 | 3 | DO4, slightly clayey, brown/yellowish-brown (Very Loose) |
| 20.0 | 6.10 | 8.5 | 2.59 | 10.0 | 3.05 | | | | | | | | AUGER REFUSAL @ 16.2', DRY PRIOR TO CORING |
| | | 10.0 | 3.05 | 13.5 | 4.11 | | | | | | | | |
| | | 13.5 | 4.11 | 15.0 | 4.57 | | | | | | | | |
| | | 15.0 | 4.57 | 16.2 | 4.94 | | | | | | | | |
| | | 16.2 | 4.94 | 19.0 | 5.79 | RUN 1 RAN 2.8 REC 0.6 RQD 21% | | | | | | | BEGIN NQ CORING @ 16.2', 100% DWR 100% DWL @ 17.0' Sandstone, gray 16.2' to 16.8' 16.8' to 19.0' Clay, very sandy, Loss 2.2' |
| | | 19.0 | 5.79 | 20.0 | 6.10 | | | | | | | | NO RECOVERY Probably very sandy clay |

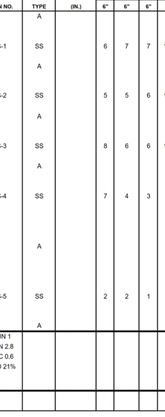

REMARKS: Continued On Page 2.

amec foster wheeler — GEOTECHNICAL BRANCH, NASHVILLE, TENNESSEE

LOG OF BORING B-54, SHEET 3 OF 4

PROJECT: ALCOA HIGHWAY WIDENING (SR-115) RETAINING WALLS 7 AND 8
PROJECT NO.: 7681-15-002
BORING NO. / LOCATION: Sta 6+190, 40.1 m Left
DRILLER: TRI-STATE DRILLING
ON-SITE REP.: NB AND WDS
DRY ON COMPLETION ?: YES, PRIOR TO CORING

DATE: 8-22-2015 TO 8-24-2015 — SURFACE ELEV. 992.6 FT. 302.5 M
REFUSAL: DEPTH 16.2 FT. 4.9 M — ELEV. 976.4 FT. 297.6 M
SAMPLED 16.2 FT. 4.9 M
TOP OF ROCK: DEPTH 16.2 FT. 4.9 M — ELEV. 976.4 FT. 297.6 M
BEGAN CORING: DEPTH 16.2 FT. 4.9 M — ELEV. 976.4 FT. 297.6 M
FOOTAGE CORED (LF): 47.8 FT. 14.6 M
BOTTOM OF HOLE: DEPTH 64.0 FT. 19.5 M — ELEV. 928.6 FT. 283.0 M

WATER LEVEL DATA (IF APPLICABLE)
COMPLETION: DEPTH FT. M — ELEV. FT. M
AFTER 24 HRS.: DEPTH FT. M — ELEV. FT. M
LDW AT: DEPTH 17.0 FT. 5.2 M — ELEV. 975.6 FT. 297.4 M

BORING ADVANCED BY: CORE — POWER AUGERING: X — WASHBORING:

| STRATUM DEPTH FT. | STRATUM DEPTH M. | SAMPLE DEPTH FROM FT. | FROM M. | TO FT. | TO M. | SAMPLE OR RUN NO. | SAMPLE TYPE | SPLE/CORE RECOV'D (IN.) | SPT VALUES 6" | 6" | 6" | N | DESCRIPTION |
|---|---|---|---|---|---|---|---|---|---|---|---|---|---|
| 42.5 | 12.95 | 20.0 | 6.10 | | | RUN 6 RAN 5.0 REC 3.1 RQD 48% | | | | | | | Sandstone, calcareous, gray to wea reddish-brown |
| 45.0 | 13.72 | 44.0 | 13.41 | 44.0 | | RUN 7 RAN 5.0 REC 5.1 RQD 78% | | | | | | | --- with open, stained bedding planes |
| 47.5 | 14.48 | | | 49.0 | 14.94 | | | | | | | | |
| 50.0 | 15.24 | 49.0 | 14.94 | 52.2 | 15.91 | RUN 8 RAN 3.2 REC 2.9 RQD 0% | | | | | | | --- variably stained, leached, weathered with numerous open stained bedding planes, Loss 0.3' |
| 52.5 | 16.00 | 52.2 | 15.91 | 54.0 | 16.46 | RUN 9 RAN 1.8 REC 1.7 RQD 94.4 | | | | | | | --- with healed diagonal fractures |
| 55.0 | 16.76 | 54.0 | 16.46 | 59.0 | 17.98 | RUN 10 RAN 5.0 REC 4.7 RQD 64% | | | | | | | --- with numerous open stained bedding planes and weathered zones, Loss 0.3' |
| 57.5 | 17.53 | | | | | | | | | | | | |
| 60.0 | 18.29 | 59.0 | 17.98 | 60.0 | 18.29 | | | | | | | | |

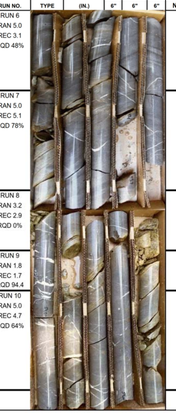

REMARKS: Continued On Page 4.

| TYPE | YEAR | PROJECT NO. | SHEET NO. |
|---|---|---|---|
| CONST. | 2015 | 47026-3279-14 | ---- |

# PRELIMINARY PLANS

SEALED BY

TENNESSEE METRIC D.O.T.

COORDINATES ARE NAD/83(1995), ARE DATUM ADJUSTED BY THE FACTOR OF 1.000 AND TIED TO THE TGRN. ALL ELEVATIONS ARE REFERENCED TO THE NAVD 1988.

STATE OF TENNESSEE
DEPARTMENT OF TRANSPORTATION

## SOIL BORING LOGS RETAINING WALLS NO. 7 AND 8

SCALE: AS NOTED

CONTRACTOR NOTES:

1. THE GEOTECHNICAL REPORT WHICH INCLUDES DETAILED BORING RECORDS, SOIL AND ROCK TESTING DATA IS AVAILABLE UPON REQUEST. ROCK CORE SAMPLES ARE AVAILABLE FOR INSPECTION BY THE CONTRACTOR.

2. IT IS THE RESPONSIBILITY OF THE CONTRACTOR TO REVIEW THE PLANS, GEOTECHNICAL REPORT, AND BORING LOGS TO BECOME FAMILIAR WITH THE SUBSURFACE CONDITIONS PERTINENT TO THE ASSOCIATED WORK TO BE CONDUCTED BY THE CONTRACTOR. THE CONTRACTOR SHOULD ALSO CONSIDER THEIR EXPERIENCE IN THE PROJECT'S GEOLOGIC AND SUBSURFACE SETTING AND THEIR EXPERIENCE IN DEALING WITH VARIABLE SUBSURFACE CONDITIONS ACROSS A PROJECT SITE TO BASE THEIR BID UPON AND DECISIONS REGARDING APPROPRIATE EQUIPMENT TO BE UTILIZED.

9/9/2015
R:_Infrastructure Project Files\2015 Infra Projects\7681-15-002 ALCOA Hwy (SR 115) WALLS 7 AND 8\06 - CADD\03-23-RETAINING WALL NO. 7 AND 8 SOIL BORING LOGS.SHT

| TYPE | YEAR | PROJECT NO. | SHEET NO. |
|---|---|---|---|
| CONST. | 2015 | 47026-3279-14 | ---- |

amec foster wheeler — GEOTECHNICAL BRANCH, NASHVILLE, TENNESSEE

LOG OF BORING B-54, SHEET 4 OF 4

PROJECT: ALCOA HIGHWAY WIDENING (SR-115) RETAINING WALLS 7 AND 8
PROJECT NO.: 7681-15-002
BORING NO. / LOCATION: 9la 6+190, 40.1 m Left
DRILLER: TRI-STATE DRILLING
ON-SITE REP.: NB AND WDS
DRY ON COMPLETION ?: YES, PRIOR TO CORING

DATE: 8-22-2015 TO 8-24-2015 — SURFACE ELEV. 992.6 FT. 302.5 M
REFUSAL: DEPTH 16.2 FT. 4.9 M — ELEV. 976.4 FT. 297.6 M
SAMPLED: 16.2 FT. 4.9 M
TOP OF ROCK: DEPTH 16.2 FT. 4.9 M — ELEV. 976.4 FT. 297.6 M
BEGAN CORING: DEPTH 16.2 FT. 4.9 M — ELEV. 976.4 FT. 297.6 M
FOOTAGE CORED (LF): 47.8 FT. 14.6 M
BOTTOM OF HOLE: DEPTH 64.0 FT. 19.5 M — ELEV. 928.6 FT. 283.0 M

WATER LEVEL DATA (IF APPLICABLE)
COMPLETION: DEPTH FT. M — ELEV. FT. M
AFTER 24 HRS.: DEPTH FT. M — ELEV. FT. M
LDW AT: DEPTH 17.0 FT. 5.2 M — ELEV. 975.6 FT. 297.4 M

BORING ADVANCED BY: CORE — POWER AUGERING: X — WASHBORING:

| STRATUM DEPTH FT. | STRATUM DEPTH M. | SAMPLE DEPTH FROM FT. | FROM M. | TO FT. | TO M. | SAMPLE OR RUN NO. | SAMPLE TYPE | SPLE/CORE RECOV'D (IN.) | SPT VALUES 6" | 6" | 6" | N | DESCRIPTION |
|---|---|---|---|---|---|---|---|---|---|---|---|---|---|
| 62.5 | 19.05 | 64.0 | 19.51 | | | RUN 11 RAN 5.0 REC 5.0 RQD 88% | | | | | | | Sandstone, calcareous, gray with open, stained bedding planes |
| 65.0 | 19.81 | | | | | | | | | | | | BORING TERMINATED @ 64.0' 100% DWL @ 17.0' |
| 67.5 | 20.57 | | | | | | | | | | | | |
| 70.0 | 21.33 | | | | | | | | | | | | |
| 72.5 | 22.10 | | | | | | | | | | | | |
| 75.0 | 22.86 | | | | | | | | | | | | |
| 77.5 | 23.62 | | | | | | | | | | | | |
| 80.0 | 24.38 | | | | | | | | | | | | |

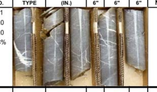

REMARKS:

amec foster wheeler — GEOTECHNICAL BRANCH, NASHVILLE, TENNESSEE

LOG OF BORING B-55, SHEET 2 OF 2

PROJECT: ALCOA HIGHWAY WIDENING (SR-115) RETAINING WALLS 7 AND 8
PROJECT NO.: 7681-15-002
BORING NO. / LOCATION: B-55, STA 6+200, 41.9m L
DRILLER: TRI-STATE DRILLING
ON-SITE REP.: WDS
DRY ON COMPLETION ?: YES, PRIOR TO CORING

DATE: August 21, 2015 — SURFACE ELEV. 975.1 FT. 297.2 M
REFUSAL: DEPTH 8.3 FT. 2.5 M — ELEV. 966.8 FT. 294.7 M
SAMPLED: 7.5 FT. 2.3 M
TOP OF ROCK: DEPTH 8.3 FT. 2.5 M — ELEV. 966.8 FT. 294.7 M
BEGAN CORING: DEPTH 8.3 FT. 2.5 M — ELEV. 966.8 FT. 294.7 M
FOOTAGE CORED (LF): 21.7 FT. 6.6 M
BOTTOM OF HOLE: DEPTH 30.0 FT. 9.1 M — ELEV. 945.1 FT. 288.1 M

WATER LEVEL DATA (IF APPLICABLE)
COMPLETION: DEPTH FT. M — ELEV. FT. M
AFTER 24 HRS.: DEPTH FT. M — ELEV. FT. M
LDW AT: DEPTH 9.0 FT. 2.7 M — ELEV. 966.1 FT. 294.5 M

BORING ADVANCED BY: CORING — POWER AUGERING: X — WASHBORING:

| STRATUM DEPTH FT. | STRATUM DEPTH M. | SAMPLE DEPTH FROM FT. | FROM M. | TO FT. | TO M. | SAMPLE OR RUN NO. | SAMPLE TYPE | SPLE/CORE RECOV'D (IN.) | SPT VALUES 6" | 6" | 6" | N | DESCRIPTION |
|---|---|---|---|---|---|---|---|---|---|---|---|---|---|
| | | 20.0 | 6.10 | | | RUN 4 RAN 5.0 REC 4.7 RQD 74% | | | | | | | Sandstone, calcareous, gray to wea reddish-brown, variably stained, leached, weathered w/ open stained and leached bedding plane fractures, healed white calcite filled fractures Dip 45° |
| 22.5 | 6.86 | | | | | | | | | | | | |
| | | | | 25.0 | 7.62 | | | | | | | | |
| 25.0 | 7.62 | 25.0 | 7.62 | | | RUN 5 RAN 5.0 REC 4.9 RQD 82% | | | | | | | |
| 27.5 | 8.38 | | | | | | | | | | | | |
| 30.0 | 9.14 | | | 30.0 | 9.14 | | | | | | | | CORING TERMINATED @ 9.1 m 100% DWL |
| 32.5 | 9.91 | | | | | | | | | | | | |
| 35.0 | 10.67 | | | | | | | | | | | | |
| 37.5 | 11.43 | | | | | | | | | | | | |
| 40.0 | 12.19 | | | | | | | | | | | | |

REMARKS: Con't page 2

amec foster wheeler — GEOTECHNICAL BRANCH, NASHVILLE, TENNESSEE

LOG OF BORING B-56A, SHEET 1 OF 3

PROJECT: ALCOA HIGHWAY WIDENING (SR-115) RETAINING WALLS 7 AND 8
PROJECT NO.: 7681-15-002
BORING NO. / LOCATION: STA 6+250, 34.8 m Left
DRILLER: TRI-STATE DRILLING
ON-SITE REP.: WDS
DRY ON COMPLETION ?: YES, PRIOR TO CORING

DATE: 8/3/2015 TO 8/4/2015 — SURFACE ELEV. 941.8 FT. 287.1 M
REFUSAL: DEPTH 19.1 FT. 5.8 M — ELEV. 922.7 FT. 281.2 M
SAMPLED: 0.0 FT. 0.0 M
TOP OF ROCK: DEPTH 19.1 FT. 5.8 M — ELEV. 922.7 FT. 281.2 M
BEGAN CORING: DEPTH 19.1 FT. 5.8 M — ELEV. 922.7 FT. 281.2 M
FOOTAGE CORED (LF): 30.0 FT. 9.1 M
BOTTOM OF HOLE: DEPTH 49.1 FT. 15.0 M — ELEV. 892.7 FT. 272.1 M

WATER LEVEL DATA (IF APPLICABLE)
COMPLETION: DEPTH FT. M — ELEV. FT. M
AFTER 24 HRS.: DEPTH FT. M — ELEV. FT. M
LDW AT: DEPTH 19.6 FT. 6.0 M — ELEV. 922.2 FT. 281.1 M

BORING ADVANCED BY: CORING — POWER AUGERING: X — WASHBORING:

| STRATUM DEPTH FT. | STRATUM DEPTH M. | SAMPLE DEPTH FROM FT. | FROM M. | TO FT. | TO M. | SAMPLE OR RUN NO. | SAMPLE TYPE | SPLE/CORE RECOV'D (IN.) | SPT VALUES 6" | 6" | 6" | N | STRATUM DESCRIPTION |
|---|---|---|---|---|---|---|---|---|---|---|---|---|---|
| | | 0.0 | 0.00 | | | | | | | | | | |
| 2.5 | 0.76 | | | | | | | | | | | | |
| 5.0 | 1.52 | | | | | | | | | | | | |
| 7.5 | 2.29 | | | | | | | | | | | | |
| 10.0 | 3.05 | | | | | | A | | | | | | AUGER TO REFUSAL |
| 12.5 | 3.81 | | | | | | | | | | | | |
| 15.0 | 4.57 | | | | | | | | | | | | |
| 17.5 | 5.33 | | | 19.1 | 5.82 | RUN 1 RAN 1.7 REC 0.8 RQD 0% | | | | | | | AUGER REFUSAL @ 19.1' DRY PRIOR TO CORING |
| 20.0 | 6.10 | 19.1 | 5.82 | 20.0 | 6.10 | | | | | | | | BEGIN NQ CORING @ 19.1', 100% DWR Sandstone, calcareous, siliceous, gray, weathered |

REMARKS: Continued On Page 2.

amec foster wheeler — GEOTECHNICAL BRANCH, NASHVILLE, TENNESSEE

LOG OF BORING B-56A, SHEET 3 OF 3

PROJECT: ALCOA HIGHWAY WIDENING (SR-115) RETAINING WALLS 7 AND 8
PROJECT NO.: 7681-15-002
BORING NO. / LOCATION: STA 6+250, 34.8 m Left
DRILLER: TRI-STATE DRILLING
ON-SITE REP.: WDS
DRY ON COMPLETION ?: YES, PRIOR TO CORING

DATE: 8/3/2015 TO 8/4/2015 — SURFACE ELEV. 941.8 FT. 287.1 M
REFUSAL: DEPTH 19.1 FT. 5.8 M — ELEV. 922.7 FT. 281.2 M
SAMPLED: 0.0 FT. 0.0 M
TOP OF ROCK: DEPTH 19.1 FT. 5.8 M — ELEV. 922.7 FT. 281.2 M
BEGAN CORING: DEPTH 19.1 FT. 5.8 M — ELEV. 922.7 FT. 281.2 M
FOOTAGE CORED (LF): 30.0 FT. 9.1 M
BOTTOM OF HOLE: DEPTH 49.1 FT. 15.0 M — ELEV. 892.7 FT. 272.1 M

WATER LEVEL DATA (IF APPLICABLE)
COMPLETION: DEPTH FT. M — ELEV. FT. M
AFTER 24 HRS.: DEPTH FT. M — ELEV. FT. M
LDW AT: DEPTH 19.6 FT. 6.0 M — ELEV. 922.2 FT. 281.1 M

BORING ADVANCED BY: CORING — POWER AUGERING: X — WASHBORING:

| STRATUM DEPTH FT. | STRATUM DEPTH M. | SAMPLE DEPTH FROM FT. | FROM M. | TO FT. | TO M. | SAMPLE OR RUN NO. | SAMPLE TYPE | SPLE/CORE RECOV'D (IN.) | SPT VALUES 6" | 6" | 6" | N | DESCRIPTION |
|---|---|---|---|---|---|---|---|---|---|---|---|---|---|
| | | | | | | | | | | | | | Sandstone, calcareous, siliceous, gray, with healed fractures |
| 42.5 | 12.95 | | | | | | | | | | | | DIP 45° to 55° |
| | | | | 44.1 | 13.44 | | | | | | | | |
| | | 44.1 | 13.44 | | | RUN 7 RAN 5.5 REC 5.0 RQD 90% | | | | | | | |
| 45.0 | 13.72 | | | | | | | | | | | | |
| 47.5 | 14.48 | | | | | | | | | | | | |
| | | | | 48.8 | 14.87 | | | | | | | | $q_u$=125.6 MPa, γ=26.55 kN/m³, 20.4% Quartz |
| | | | | 49.1 | 14.97 | | | | | | | | |
| 50.0 | 15.24 | | | | | | | | | | | | BORING TERMINATED @ 49.1' 100% DWL |
| 52.5 | 16.00 | | | | | | | | | | | | |
| 55.0 | 16.76 | | | | | | | | | | | | |
| 57.5 | 17.53 | | | | | | | | | | | | |
| 60.0 | 18.29 | | | | | | | | | | | | |

REMARKS:

amec foster wheeler — GEOTECHNICAL BRANCH, NASHVILLE, TENNESSEE

LOG OF BORING B-55, SHEET 1 OF 2

PROJECT: ALCOA HIGHWAY WIDENING (SR-115) RETAINING WALLS 7 AND 8
PROJECT NO.: 7681-15-002
BORING NO. / LOCATION: B-55, STA 6+200, 41.9m L
DRILLER: TRI-STATE DRILLING
ON-SITE REP.: WDS
DRY ON COMPLETION ?: YES, PRIOR TO CORING

DATE: August 21, 2015 — SURFACE ELEV. 975.1 FT. 297.2 M
REFUSAL: DEPTH 8.3 FT. 2.5 M — ELEV. 966.8 FT. 294.7 M
SAMPLED: 7.5 FT. 2.3 M
TOP OF ROCK: DEPTH 8.3 FT. 2.5 M — ELEV. 966.8 FT. 294.7 M
BEGAN CORING: DEPTH 8.3 FT. 2.5 M — ELEV. 966.8 FT. 294.7 M
FOOTAGE CORED (LF): 21.7 FT. 6.6 M
BOTTOM OF HOLE: DEPTH 30.0 FT. 9.1 M — ELEV. 945.1 FT. 288.1 M

WATER LEVEL DATA (IF APPLICABLE)
COMPLETION: DEPTH FT. M — ELEV. FT. M
AFTER 24 HRS.: DEPTH FT. M — ELEV. FT. M
LDW AT: DEPTH 9.0 FT. 2.7 M — ELEV. 966.1 FT. 294.5 M

BORING ADVANCED BY: CORING — POWER AUGERING: X — WASHBORING:

| STRATUM DEPTH FT. | STRATUM DEPTH M. | SAMPLE DEPTH FROM FT. | FROM M. | TO FT. | TO M. | SAMPLE OR RUN NO. | SAMPLE TYPE | SPLE/CORE RECOV'D (IN.) | SPT VALUES 6" | 6" | 6" | N | STRATUM DESCRIPTION |
|---|---|---|---|---|---|---|---|---|---|---|---|---|---|
| | | 0.0 | 0.00 | | | | A | | | | | | |
| | | | | 1.0 | 0.30 | | | | | | | | |
| | | 1.0 | 0.30 | | | S-1 | SS | 14 | 6 | 3 | 3 | 6 | Clay, sandy, reddish-brown (Moist)(Medium Stiff) |
| 2.5 | 0.76 | | | | | | | | | | | | |
| | | | | 2.5 | 0.76 | | | | | | | | to |
| | | 2.5 | 0.76 | | | | A | | | | | | Sand, clayey, brown and dark brown (Moist)(Loose) |
| | | | | 3.5 | 1.07 | | | | | | | | |
| | | 3.5 | 1.07 | | | | | | | | | | |
| | | | | | | S-2 | SS | 16 | 3 | 1 | 2 | 3 | Clay, sandy, brown (Moist)(Medium Stiff) |
| 5.0 | 1.52 | | | | | | | | | | | | |
| | | | | 5.0 | 1.52 | | | | | | | | |
| | | 5.0 | 1.52 | | | | A | | | | | | |
| | | | | 6.0 | 1.83 | | | | | | | | |
| | | 6.0 | 1.83 | | | | | | | | | | |
| | | | | | | S-3 | SS | 14 | 3 | 2 | 7 | 9 | Sand, clayey, brown and dark brown (Moist)(Loose) |
| 7.5 | 2.29 | | | | | | | | | | | | |
| | | | | 7.5 | 2.29 | | | | | | | | |
| | | 7.5 | 2.29 | | | | A | | | | | | |
| | | | | 8.5 | 2.59 | | | | | | | | AUGER REFUSAL @ 8.3', DRY PRIOR TO CORING |
| | | 8.5 | 2.59 | | | RUN 1 RAN 1.7 REC 1.0 RQD 24% | | | | | | | BEGIN NQ CORING @ 8.3', 100 DWL @ 9.0' Sandstone, gray to weathered reddish-brown |
| | | | | 10.0 | 3.05 | | | | | | | | |
| 10.0 | 3.05 | 10.0 | 3.05 | | | RUN 2 RAN 5.0 REC 0.0 RQD 0% | | | | | | | No Recovery. Water Pressure. Probably very sandy clay |
| 12.5 | 3.81 | | | | | | | | | | | | |
| | | | | 15.0 | 4.57 | | | | | | | | |
| 15.0 | 4.57 | 15.0 | 4.57 | | | RUN 3 RAN 5.0 REC 4.3 RQD 46% | | | | | | | Sandstone, calcareous, gray to wea reddish-brown, variably stained, leached, weathered w/ open stained and leached bedding plane fractures, healed white calcite filled fractures, Dip 45° |
| 17.5 | 5.33 | | | | | | | | | | | | |
| | | | | 20.0 | 6.10 | | | | | | | | void from 19.1' - 19.8' |
| 20.0 | 6.10 | | | | | | | | | | | | |

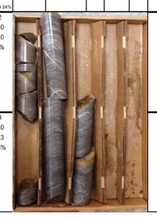

REMARKS: Con't page 2

amec foster wheeler — GEOTECHNICAL BRANCH, NASHVILLE, TENNESSEE

LOG OF BORING B-56, SHEET 1 OF 1

PROJECT: ALCOA HIGHWAY WIDENING (SR-115) RETAINING WALLS 7 AND 8
PROJECT NO.: 7681-15-002
BORING NO. / LOCATION: STA 6+250, 36.2 m Left
DRILLER: TRI-STATE DRILLING
ON-SITE REP.: WDS
DRY ON COMPLETION ?: YES

DATE: August 1, 2015 — SURFACE ELEV. 942.2 FT. 287.2 M
REFUSAL: DEPTH 20.0 FT. 6.1 M — ELEV. 922.2 FT. 281.1 M
SAMPLED: 20.0 FT. 6.1 M
TOP OF ROCK: DEPTH 20.0 FT. 6.1 M — ELEV. 922.2 FT. 281.1 M
BEGAN CORING: DEPTH NA FT. M — ELEV. FT. M
FOOTAGE CORED (LF): 0.0 FT. 0.0 M
BOTTOM OF HOLE: DEPTH 20.0 FT. 6.1 M — ELEV. 922.2 FT. 281.1 M

WATER LEVEL DATA (IF APPLICABLE)
COMPLETION: DEPTH FT. M — ELEV. FT. M
AFTER 24 HRS.: DEPTH FT. M — ELEV. FT. M
LDW AT: DEPTH FT. M — ELEV. FT. M

BORING ADVANCED BY: — POWER AUGERING: X — WASHBORING:

| STRATUM DEPTH FT. | STRATUM DEPTH M. | SAMPLE DEPTH FROM FT. | FROM M. | TO FT. | TO M. | SAMPLE OR RUN NO. | SAMPLE TYPE | SPLE/CORE RECOV'D (IN.) | SPT VALUES 6" | 6" | 6" | N | STRATUM DESCRIPTION |
|---|---|---|---|---|---|---|---|---|---|---|---|---|---|
| | | 0.0 | 0.00 | | | | A | | | | | | |
| | | | | 1.0 | 0.30 | | | | | | | | |
| | | 1.0 | 0.30 | | | S-1 | SS | 14 | 3 | 3 | 3 | 6 | Clay, very sandy, silty, reddish-brown with sandstone fragments (Damp)(Medium Stiff) |
| 2.5 | 0.76 | | | | | | | | | | | | |
| | | | | 2.5 | 0.76 | | | | | | | | |
| | | 2.5 | 0.76 | | | | A | | | | | | |
| | | | | 3.5 | 1.07 | | | | | | | | |
| | | 3.5 | 1.07 | | | | | | | | | | |
| | | | | | | S-2 | SS | 18 | 4 | 5 | 5 | 10 | Sand, (F-M), silty, slightly clayey, reddish-brown with sandstone fragments (moist) (Loose) |
| 5.0 | 1.52 | | | | | | | | | | | | |
| | | | | 5.0 | 1.52 | | | | | | | | |
| | | 5.0 | 1.52 | | | | A | | | | | | |
| | | | | 6.0 | 1.83 | | | | | | | | |
| | | 6.0 | 1.83 | | | | | | | | | | |
| | | | | | | S-3 | SS | 16 | 7 | 4 | 4 | 8 | DO2 |
| 7.5 | 2.29 | | | | | | | | | | | | |
| | | | | 7.5 | 2.29 | | | | | | | | |
| | | 7.5 | 2.29 | | | | A | | | | | | |
| | | | | 8.5 | 2.59 | | | | | | | | |
| | | 8.5 | 2.59 | | | | | | | | | | |
| | | | | | | S-4 | SS | 16 | 3 | 3 | 3 | 6 | DO2 |
| 10.0 | 3.05 | | | | | | | | | | | | |
| | | | | 10.0 | 3.05 | | | | | | | | |
| | | 10.0 | 3.05 | | | | | | | | | | |
| 12.5 | 3.81 | | | | | | | | | | | | |
| | | | | | | | A | | | | | | |
| | | | | 13.5 | 4.11 | | | | | | | | |
| | | 13.5 | 4.11 | | | | | | | | | | |
| | | | | | | S-5 | SS | 18 | 2 | 2 | 2 | 4 | DO2, very loose, with sandstone and root fragments (Decomposed Sandstone) |
| 15.0 | 4.57 | | | | | | | | | | | | |
| | | | | 15.0 | 4.57 | | | | | | | | |
| | | 15.0 | 4.57 | | | | | | | | | | |
| | | | | | | | A | | | | | | |
| 17.5 | 5.33 | | | | | | | | | | | | AUGER LEADING OFF ALONG IRREGULAR ROCK SURFACE |
| | | | | 18.5 | 5.64 | | | | | | | | |
| | | 18.5 | 5.64 | | | | | | | | | | |
| | | | | | | S-6 | SS | 14 | 4 | 5 | 3 | 8 | Sand (F-M), silty, dark brown with sandstone fragments (moist)(Loose)(Decomposed Sandstone) |
| 20.0 | 6.10 | | | 20.0 | 6.10 | | | | | | | | BORING TERMINATED @ 20.0', DRY ON COMPLETION |

REMARKS: AUGERS LEADING OFF ON IRREGULAR BEDROCK SURFACE. BORING TERMINATED.

amec foster wheeler — GEOTECHNICAL BRANCH, NASHVILLE, TENNESSEE

LOG OF BORING B-56A, SHEET 2 OF 3

PROJECT: ALCOA HIGHWAY WIDENING (SR-115) RETAINING WALLS 7 AND 8
PROJECT NO.: 7681-15-002
BORING NO. / LOCATION: STA 6+250, 34.8 m Left
DRILLER: TRI-STATE DRILLING
ON-SITE REP.: WDS
DRY ON COMPLETION ?: YES, PRIOR TO CORING

DATE: 8/3/2015 TO 8/4/2015 — SURFACE ELEV. 941.8 FT. 287.1 M
REFUSAL: DEPTH 19.1 FT. 5.8 M — ELEV. 922.7 FT. 281.2 M
SAMPLED: 0.0 FT. 0.0 M
TOP OF ROCK: DEPTH 19.1 FT. 5.8 M — ELEV. 922.7 FT. 281.2 M
BEGAN CORING: DEPTH 19.1 FT. 5.8 M — ELEV. 922.7 FT. 281.2 M
FOOTAGE CORED (LF): 30.0 FT. 9.1 M
BOTTOM OF HOLE: DEPTH 49.1 FT. 15.0 M — ELEV. 892.7 FT. 272.1 M

WATER LEVEL DATA (IF APPLICABLE)
COMPLETION: DEPTH FT. M — ELEV. FT. M
AFTER 24 HRS.: DEPTH FT. M — ELEV. FT. M
LDW AT: DEPTH 19.6 FT. 6.0 M — ELEV. 922.2 FT. 281.1 M

BORING ADVANCED BY: CORING — POWER AUGERING: X — WASHBORING:

| STRATUM DEPTH FT. | STRATUM DEPTH M. | SAMPLE DEPTH FROM FT. | FROM M. | TO FT. | TO M. | SAMPLE OR RUN NO. | SAMPLE TYPE | SPLE/CORE RECOV'D (IN.) | SPT VALUES 6" | 6" | 6" | N | DESCRIPTION |
|---|---|---|---|---|---|---|---|---|---|---|---|---|---|
| | | | | | | | | | | | | | Sandstone, calcareous, siliceous, gray, weathered Loss 0.9' from 19.9 to 20.8 |
| | | | | 20.8 | 6.34 | | | | | | | | |
| | | 20.8 | 6.34 | | | RUN 2 RAN 3.3 REC 0.7 RQD 0% | | | | | | | |
| 22.5 | 6.86 | | | | | | | | | | | | sand filled cavity 21.5' to 24.1', Loss 2.6' |
| | | | | 24.1 | 7.35 | | | | | | | | |
| | | 24.1 | 7.346 | | | RUN 3 RAN 5.0 REC 0.6 RQD 6% | | | | | | | |
| 25.0 | 7.62 | | | | | | | | | | | | clayey sand filled cavity to 28.6', Loss 4.4' |
| | | | | | | | | | | | | | DIP 65° |
| 27.5 | 8.38 | | | | | | | | | | | | |
| | | | | 28.9 | 8.81 | | | | | | | | $q_u$=136.3 MPa, γ=26.24 kN/m³, 30.7% Quartz |
| | | | | 29.1 | 8.87 | | | | | | | | CORE PHOTO 19.1 TO 29.1 |
| | | 29.1 | 8.87 | | | RUN 4 RAN 5.0 REC 4.6 RQD 78% | | | | | | | |
| 30.0 | 9.14 | | | | | | | | | | | | with open stained diagonal bedding planes and sand filled cavity 33.7' to 34.1', Loss 0.4' DIP 55° |
| 32.5 | 9.91 | | | | | | | | | | | | |
| | | | | 34.1 | 10.39 | | | | | | | | |
| | | 34.1 | 10.39 | | | RUN 5 RAN 5.5 REC 3.1 RQD 48% | | | | | | | |
| 35.0 | 10.67 | | | | | | | | | | | | sand filled cavity to 36.0', Loss 1.9' |
| | | | | | | | | | | | | | open stained diagonal bedding planes DIP 55° to 65° |
| 37.5 | 11.43 | | | | | | | | | | | | |
| | | | | 39.1 | 11.92 | RUN 6 RAN 5.0 REC 5.0 RQD 88% | | | | | | | CORE PHOTO 29.1 TO 39.1 |
| | | 39.1 | 11.92 | | | | | | | | | | |
| | | | | 40.0 | 12.19 | | | | | | | | open stained diagonal bedding planes |
| 40.0 | 12.19 | | | | | | | | | | | | |

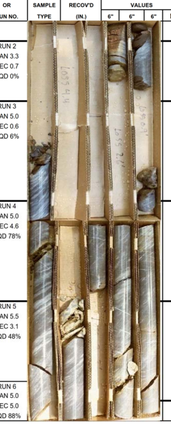

REMARKS: Continued On Page 3.

CONTRACTOR NOTES:

1. THE GEOTECHNICAL REPORT WHICH INCLUDES DETAILED BORING RECORDS, SOIL AND ROCK TESTING DATA IS AVAILABLE UPON REQUEST. ROCK CORE SAMPLES ARE AVAILABLE FOR INSPECTION BY THE CONTRACTOR.

2. IT IS THE RESPONSIBILITY OF THE CONTRACTOR TO REVIEW THE PLANS, GEOTECHNICAL REPORT, AND BORING LOGS TO BECOME FAMILIAR WITH THE SUBSURFACE CONDITIONS PERTINENT TO THE ASSOCIATED WORK TO BE CONDUCTED BY THE CONTRACTOR. THE CONTRACTOR SHOULD ALSO CONSIDER THEIR EXPERIENCE IN THE PROJECT'S GEOLOGIC AND SUBSURFACE SETTING AND THEIR EXPERIENCE IN DEALING WITH VARIABLE SUBSURFACE CONDITIONS ACROSS A PROJECT SITE TO BASE THEIR BID UPON AND DECISIONS REGARDING APPROPRIATE EQUIPMENT TO BE UTILIZED.

PRELIMINARY PLANS

SEALED BY

TENNESSEE METRIC

COORDINATES ARE NAD/83(1995), ARE DATUM ADJUSTED BY THE FACTOR OF 1.000 AND TIED TO THE TGRN. ALL ELEVATIONS ARE REFERENCED TO THE NAVD 1988.

STATE OF TENNESSEE
DEPARTMENT OF TRANSPORTATION

SOIL BORING LOGS
RETAINING WALLS
NO. 7 AND 8

SCALE: AS NOTED

9/9/2015
R:_Infrastructure Project Files\2015 Infra Projects\7681-15-002 ALCOA Hwy (SR 115) WALLS 7 AND 8\06 - CADD\03-23-RETAINING WALL NO. 7 AND 8 SOIL BORING LOGS.SHT

| TYPE | YEAR | PROJECT NO. | SHEET NO. |
|---|---|---|---|
| CONST. | 2015 | 47026-3279-14 | ---- |

## ESTIMATED QUANTITIES - WALL 7

**WALL 7 ESTIMATED QUANTITIES**

| | ITEM # | ITEM DESCRIPTION | UNIT | QUANTITY |
|---|---|---|---|---|
| 1 | 203M40.10 | TIE-BACK ANCHORS (SOIL) | m | 3575 |
| | 203M40.11 | TIE-BACK ANCHORS (ROCK) | m | 4331 |
| 2 | 204M14 | CORE DRILLING FOR PILES (ROCK) | m | 404 |
| 3 | 204M15 | CORE DRILLING FOR PILES (SOIL) | m | 1096 |
| 4 | 303M01.03 | GRANULAR BACKFILL (RETAINING WALLS) | TONN | 958 |
| 5 | 604M07.07 | RETAINING WALL (WALL 7) | $m^2$ | 1166 |
| 6 | 604M15.02 | PORTLAND CEMENT GROUT (5 MPa) | $m^3$ | 561 |
| 7 | 606M04.03 | STEEL PILE (350mm) | m | 1500 |
| 8 | ????? 621M05.01 | TEMPORARY SHORING | $m^2$ | 1166 |
| 9 | ????? 624M01.01 | LOAD CELLS | EACH | 2 |
| 10 | ????? 624M03.01 | RETAINING WALL REINFORCING STEEL | kg | 14260 |
| 11 | ????? 625M01.07 | PIEZOMETER | m | 6 |
| 11 | ????? 625M01.08 | INCLINOMETER | m | 6 |
| 12 | ????? 625M02.40 | DRILLED SHAFT CONCRETE | $m^3$ | 343 |

## FOOTNOTES-WALL 7

(1) TOTAL ESTIMATED NUMBER OF ANCHORS IS 309 EACH. ANCHOR LENGTH IS COMBINATION OF MINIMUM FREE LENGTH AND ESTIMATED BOND LENGTH, ACTUAL ANCHOR LENGTH SHALL BE DETERMINED BY TESTING. THIS ITEM INCLUDES ANCHOR STRAND, ANCHOR HEAD, ANCHOR BEARING PLATE, PRIMARY AND SECONDARY ANCHOR GROUT, TRUMPET PIPE, STEEL AND PVC PIPE SLEEVES, CORRUGATED PVC SHEATH, WEDGE PLATES, COST OF STRESSING/LOAD TESTING/ACCEPTANCE, AND ANY OTHER MATERIALS NECESSARY FOR INSTALLATION OF THE ANCHOR SYSTEM. SEE SHEET "RETAINING WALL NO. 7 PILE AND ANCHOR SCHEDULES" FOR MINIMUM ANCHOR FREE LENGTH. UNCLASSIFIED SHALL BE DEFINED AS ALL MATERIALS ENCOUNTERED DURING INSTALLATION.

(2) ITEM INCLUDES FULL COMPENSATION FOR COSTS OF DRILLING, EXCAVATION, DEWATERING, AND INCIDENTAL WORK AND MATERIALS REQUIRED TO COMPLETE THE EXCAVATION. PAYMENT SHALL BE BASED AT THE CONTRACT UNIT PRICE PER VERTICAL METER OF 762mm DIAMETER SOLDIER PILE HOLES IN SOLID ROCK. SOLID ROCK IS NATURAL MATERIAL THAT IS PENETRATED WITH A ROCK AUGER AT A HOLE ADVANCEMENT RATE OF LESS THAN 250mm PER SQUARE METER OF HOLE AREA PER EACH FIFTEEN MINUTES OF CONTINUOUS DRILLING AT FULL POWER (E.G., A 915mm DIAMETER HOLE HAS APPROXIMATELY 0.65 SQUARE METERS OF AREA; SO, ADVANCEMENT RATE OF LESS THAN 178mm PER 15 MINUTES INDICATE SOLID ROCK).

(3) ITEM INCLUDES FULL COMPENSATION FOR ALL TEMPORARY STEEL CASING REQUIRED, COSTS OF DRILLING, EXCAVATION, DEWATERING, AND INCIDENTAL WORK AND MATERIALS REQUIRED TO COMPLETE THE EXCAVATION. PAYMENT SHALL BE BASED AT THE CONTRACT UNIT PRICE PER VERTICAL METER OF 915mm DIAMETER SOLDIER PILE HOLES IN OVERBURDEN SOIL. NO ADDITIONAL COMPENSATION WILL BE MADE FOR CONCRETE REQUIRED TO FILL AN OVERSIZED CASING OR FOR OVERSIZED EXCAVATION.

(4) FILL PORTION OF WALL 7 TO BE BACKFILLED WITH NO. 57 STONE. SEE TYPICAL CUT/FILL SECTION ON SHEET "RETAINING WALL 7 TYPICAL SECTIONS" FOR ADDITIONAL INFORMATION.

(5) ITEM INCLUDES ALL COSTS FOR CONCRETE, EXCAVATION, BACKFILLING, DRAINS, LABOR, MONITORING EQUIPMENT, MOMENT SLAB, STAINING, GRAFFITI PROTECTION, FORM LINER & FINISH, TEXTURE COATING, AND SHEAR STUDS MEASURED FROM TOP OF WALL TO BOTTOM OF WALL. SEE 620-05.01 FOR PARAPET.

(6) ITEM SHALL BE LEAN MIX CONCRETE: TYPE I OR II PORTLAND CEMENT, FINE AGGREGATE, AND WATER. EACH CUBIC METER OF LEAN MIX CONCRETE SHALL CONSIST OF A MINIMUM OF ONE SACK (42.7 KG) OF PORTLAND CEMENT. LEAN MIX SHALL HAVE A MINIMUM 7-DAY COMPRESSIVE STRENGTH OF 5 MPa. LEAN MIX SHALL BE USED FOR BACKFILLING SOLDIER PILE DRILL HOLES ABOVE FINAL GRADE TO FACILITATE PLACEMENT OF WOOD LAGGING.

(7) ITEM INCLUDES STEEL PILE (HP360X109 - 162 PILES APPROXIMATELY 1500m) AND FABRICATION (INCLUDING ALL CUTS AND STIFFENER PLATES). PILES TO BE ASTM A572M GRADE 350.

(8) ITEM INCLUDES ALL LAGGING TIMBER, ATTACHMENT CLIPS, CONTINUOUS VERTICAL DRAIN, DRAINAGE GRATE, PVC DRAIN PIPE, AND ANY OTHER MATERIALS NECESSARY FOR INSTALLATION OF THE LAGGING AND DRAINAGE SYSTEM.

(9) ITEM FOR INSTALLATION OF 1780 kN CENTER HOLE LOAD CELLS. LOAD CELLS SHALL BE INSTALLED ON PILE P56 AS SHOWN IN PROFILE.

(10) ITEM FOR RETAINING WALL FACE, SEE SHEET "RETAINING WALL NO. 7 TYPICAL SECTIONS" FOR BAR SPACING.

(11) ITEMS FOR INSTALLATION OF INSTRUMENTATION TO MONITOR WALL. SEE SHEET "RETAINING WALL NO. 7 PROFILE" FOR LOCATIONS AND DEPTHS.

(12) ITEM SHALL BE STRUCTURAL MIX, CLASS A CONCRETE WITH A MINIMUM 28-DAY COMPRESSIVE STRENGTH OF 28 MPa. STRUCTURAL MIX SHALL BE USED BELOW FINAL GRADE TO TRANSFER VERTICAL LOAD (FROM THE VERTICAL COMPONENT OF THE TIEBACK ANCHORS) APPLIED TO THE SOLDIER PILE THROUGH THE CONCRETE INTO THE SURROUNDING SOIL.

## ESTIMATED QUANTITIES - WALL 8

**WALL 8 ESTIMATED QUANTITIES**

| | ITEM # | ITEM DESCRIPTION | UNIT | QUANTITY |
|---|---|---|---|---|
| 1 | 203M40.10 | TIE-BACK ANCHORS (SOIL) | m | 20771 |
| | 203M40.11 | TIE-BACK ANCHORS (ROCK) | m | 10708 |
| 2 | 204M14 | CORE DRILLING FOR PILES (ROCK) | m | 1953 |
| 3 | 204M15 | CORE DRILLING FOR PILES (SOIL) | m | 4036 |
| 4 | 203M40.13 | SUPPLEMENTAL WALERS | EACH | 4 |
| 5 | 303M01.03 | GRANULAR BACKFILL (RETAINING WALLS) | TONN | 287 |
| 6 | 604M07.08 | RETAINING WALL (WALL 8) | $m^2$ | 6678 |
| 7 | 604M15.02 | PORTLAND CEMENT GROUT (5 MPa) | $m^3$ | 7478 |
| 8 | 606M04.03 | STEEL PILE (350mm) | m | 5988 |
| 9 | ????? 621M05.01 | TEMPORARY SHORING | $m^2$ | 6678 |
| 10 | ????? 624M01.01 | LOAD CELLS | EACH | 4 |
| 11 | ????? 624M03.01 | RETAINING WALL REINFORCING STEEL | kg | 81602 |
| 12 | ????? 625M01.07 | PIEZOMETER | m | 34 |
| 12 | ????? 625M01.08 | INCLINOMETER | m | 34 |
| 13 | ????? 625M02.40 | DRILLED SHAFT CONCRETE | $m^3$ | 4049 |
| | 711M05.76 | SINGLE SLOPE HALF CONCRETE BARRIER WALL (STD S-SSMB-3) | m | 572 |

## FOOTNOTES-WALL 8

(1) TOTAL ESTIMATED NUMBER OF ANCHORS IS 1146 EACH. ANCHOR LENGTH IS COMBINATION OF MINIMUM FREE LENGTH AND ESTIMATED BOND LENGTH, ACTUAL ANCHOR LENGTH SHALL BE DETERMINED BY TESTING. THIS ITEM INCLUDES ANCHOR STRAND, ANCHOR HEAD, ANCHOR BEARING PLATE, PRIMARY AND SECONDARY ANCHOR GROUT, TRUMPET PIPE, STEEL AND PVC PIPE SLEEVES, CORRUGATED PVC SHEATH, WEDGE PLATES, COST OF STRESSING/LOAD TESTING/ACCEPTANCE, AND ANY OTHER MATERIALS NECESSARY FOR INSTALLATION OF THE ANCHOR SYSTEM. SEE SHEET "RETAINING WALL NO. 8 PILE AND ANCHOR SCHEDULES" FOR MINIMUM ANCHOR FREE LENGTH. UNCLASSIFIED SHALL BE DEFINED AS ALL MATERIALS ENCOUNTERED DURING INSTALLATION.

(2) ITEM INCLUDES FULL COMPENSATION FOR COSTS OF DRILLING, EXCAVATION, DEWATERING, AND INCIDENTAL WORK AND MATERIALS REQUIRED TO COMPLETE THE EXCAVATION. PAYMENT SHALL BE BASED AT THE CONTRACT UNIT PRICE PER VERTICAL METER OF 762mm DIAMETER SOLDIER PILE HOLES IN SOLID ROCK. SOLID ROCK IS NATURAL MATERIAL THAT IS PENETRATED WITH A ROCK AUGER AT A HOLE ADVANCEMENT RATE OF LESS THAN 250mm PER SQUARE METER OF HOLE AREA PER EACH FIFTEEN MINUTES OF CONTINUOUS DRILLING AT FULL POWER (E.G., A 915mm DIAMETER HOLE HAS APPROXIMATELY 0.65 SQUARE METERS OF AREA; SO, ADVANCEMENT RATE OF LESS THAN 178mm PER 15 MINUTES INDICATE SOLID ROCK).

(3) ITEM INCLUDES FULL COMPENSATION FOR ALL TEMPORARY STEEL CASING REQUIRED, COSTS OF DRILLING, EXCAVATION, DEWATERING, AND INCIDENTAL WORK AND MATERIALS REQUIRED TO COMPLETE THE EXCAVATION. PAYMENT SHALL BE BASED AT THE CONTRACT UNIT PRICE PER VERTICAL METER OF 915mm DIAMETER SOLDIER PILE HOLES IN OVERBURDEN SOIL. NO ADDITIONAL COMPENSATION WILL BE MADE FOR CONCRETE REQUIRED TO FILL AN OVERSIZED CASING OR FOR OVERSIZED EXCAVATION.

(4) FILL PORTION OF WALL 8 TO BE BACKFILLED WITH NO. 57 STONE. SEE TYPICAL CUT/FILL SECTION ON SHEET "RETAINING WALL 8 TYPICAL SECTIONS" FOR ADDITIONAL INFORMATION.

(5) ITEM INTENDED FOR USE WHERE ADDITIONAL ANCHORS ARE REQUIRED TO REPLACE ABANDONED OR FAILED ANCHORS, SEE SHEET "RETAINING WALL NO. 8 SUPPLEMENTAL WALER DETAILS" FOR MORE INFORMATION.

(6) ITEM INCLUDES ALL COSTS FOR CONCRETE, EXCAVATION, BACKFILLING, DRAINS, LABOR, MONITORING EQUIPMENT, MOMENT SLAB, STAINING, GRAFFITI PROTECTION, FORM LINER & FINISH, TEXTURE COATING, AND SHEAR STUDS MEASURED FROM TOP OF WALL TO BOTTOM OF WALL. SEE 620-05.01 FOR PARAPET.

(7) ITEM SHALL BE LEAN MIX CONCRETE: TYPE I OR II PORTLAND CEMENT, FINE AGGREGATE, AND WATER. EACH CUBIC METER OF LEAN MIX CONCRETE SHALL CONSIST OF A MINIMUM OF ONE SACK (42.7 KG) OF PORTLAND CEMENT. LEAN MIX SHALL HAVE A MINIMUM 7-DAY COMPRESSIVE STRENGTH OF 5 MPa. LEAN MIX SHALL BE USED FOR BACKFILLING SOLDIER PILE DRILL HOLES ABOVE FINAL GRADE TO FACILITATE PLACEMENT OF WOOD LAGGING.

(8) ITEM INCLUDES STEEL PILE (HP360X109 - 87 PILES APPROXIMATELY 1215m, HP360X132 - 179 PILES APPROXIMATELY 3252m, HP360X152 - 21 PILES APPROXIMATELY 641m, AND HP360X174 - 27 PILES APPROXIMATELY 881m) AND FABRICATION (INCLUDING ALL CUTS AND STIFFENER PLATES). PILES TO BE ASTM A572M GRADE 350.

(9) ITEM INCLUDES ALL LAGGING TIMBER, ATTACHMENT CLIPS, CONTINUOUS VERTICAL DRAIN, DRAINAGE GRATE, PVC DRAIN PIPE, AND ANY OTHER MATERIALS NECESSARY FOR INSTALLATION OF THE LAGGING AND DRAINAGE SYSTEM.

(10) ITEM FOR INSTALLATION OF 1780 kN CENTER HOLE LOAD CELLS. LOAD CELLS SHALL BE INSTALLED ON PILE P196 AND PILE P246 AS SHOWN IN PROFILE.

(11) ITEM FOR RETAINING WALL FACE, SEE SHEET "RETAINING WALL NO. 8 TYPICAL SECTIONS" FOR BAR SPACING.

(12) ITEMS FOR INSTALLATION OF INSTRUMENTATION TO MONITOR WALL. SEE SHEET "RETAINING WALL NO. 8 PROFILE" FOR LOCATIONS AND DEPTHS.

(13) ITEM SHALL BE STRUCTURAL MIX, CLASS A CONCRETE WITH A MINIMUM 28-DAY COMPRESSIVE STRENGTH OF 28 MPa. STRUCTURAL MIX SHALL BE USED BELOW FINAL GRADE TO TRANSFER VERTICAL LOAD (FROM THE VERTICAL COMPONENT OF THE TIEBACK ANCHORS) APPLIED TO THE SOLDIER PILE THROUGH THE CONCRETE INTO THE SURROUNDING SOIL.

**PRELIMINARY**

**PLANS**

TENNESSEE METRIC D.O.T.

COORDINATES ARE NAD/83(1995), ARE DATUM ADJUSTED BY THE FACTOR OF 1.000 AND TIED TO THE TGRN. ALL ELEVATIONS ARE REFERENCED TO THE NAVD 1988.

STATE OF TENNESSEE
DEPARTMENT OF TRANSPORTATION

ESTIMATED QUANTITIES RETAINING WALLS NO. 7 AND 8

STA. 5+703 TO STA. 6+000

SCALE: AS NOTED

9/10/2015
R:_Infrastructure Project Files\2015 Infra Projects\768I-15-002 ALCOA Hwy (SR 115) WALLS 7 AND 8\06 - CADD\07_retaining walls 7 and 8 items list-est-qtys-notes.sht

| TYPE | YEAR | PROJECT NO. | SHEET NO. |
|---|---|---|---|
| CONST. | 2015 | 47026-3279-14 | 2P8 |

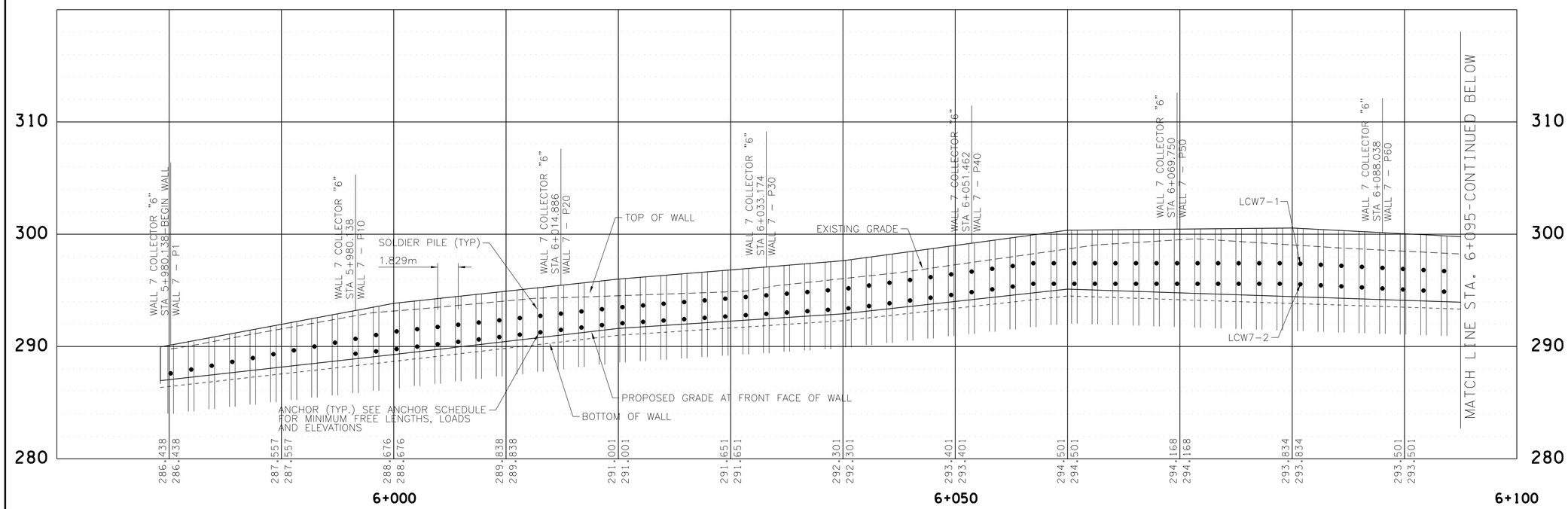


## LEGEND

TW EL 283.390 — TOP OF WALL ELEVATION (EXCLUDES BARRIER WALL)

BW EL 273.400 — BOTTOM OF WALL ELEVATION

PILE AND ANCHORS

LCW7-1 — LOAD CELL (1-TOP ANCHOR, 2-BOTTOM ANCHOR)

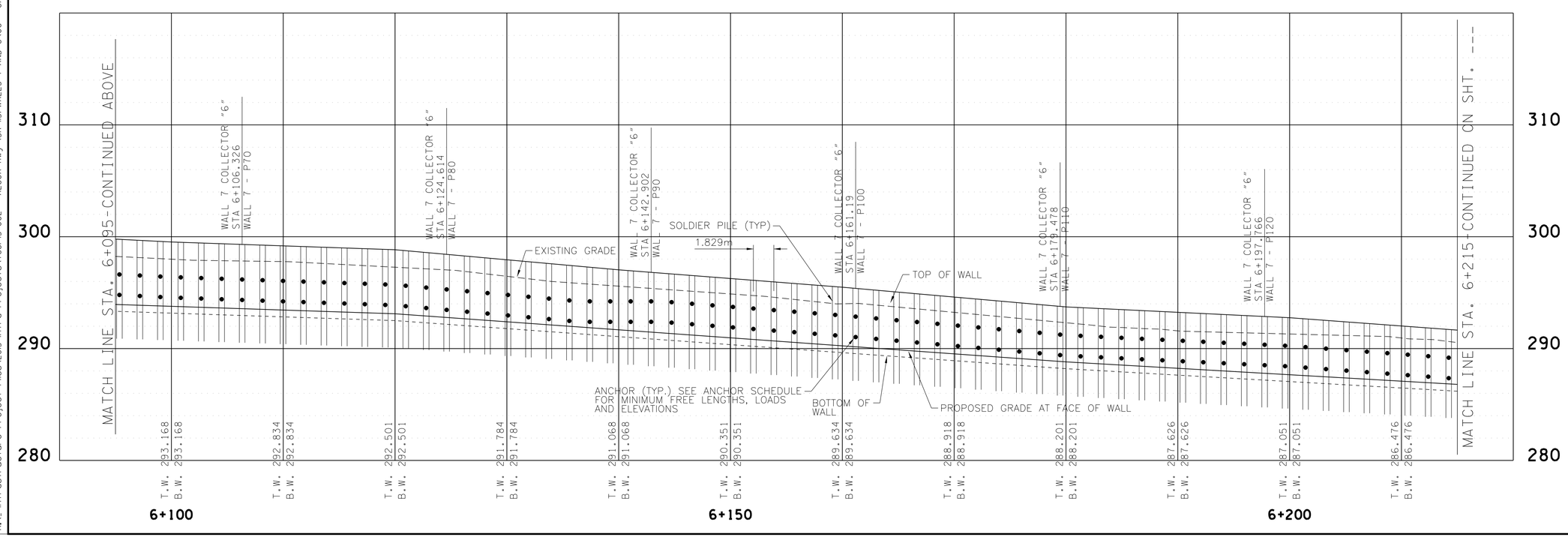


# PRELIMINARY PLANS

METRIC

COORDINATES ARE NAD/83(1995), ARE DATUM ADJUSTED BY THE FACTOR OF 1.000 AND TIED TO THE TGRN. ALL ELEVATIONS ARE REFERENCED TO THE NAVD 1988.

STATE OF TENNESSEE
DEPARTMENT OF TRANSPORTATION

## PROFILE RETAINING WALL NO. 7

STA.5+979 TO STA.6+215

SCALE: 1:200 HORIZ.
1:200 VERT.

9/10/2015
R:_Infrastructure Project Files\2015 Infra Projects\768I-I5-002 ALCOA Hwy (SR 115) WALLS 7 AND 8\06 - CADD\WL-RETAINING WALL NO.7 PROFILESTA.5+979 TO STA 6+215.sht

| TYPE | YEAR | PROJECT NO. | SHEET NO. |
|---|---|---|---|
| CONST. | 2015 | 47026-3279-14 | 2P8 |

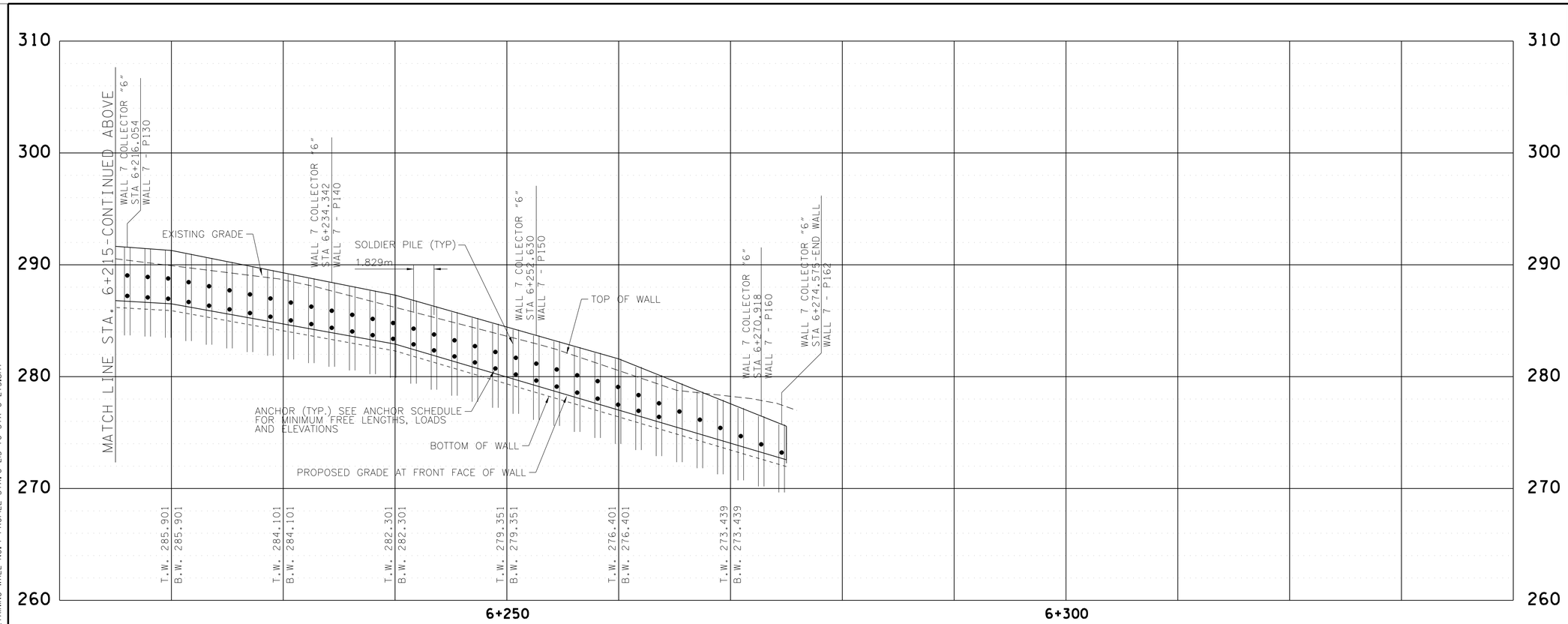


LEGEND

TW EL 283.390 — TOP OF WALL ELEVATION (EXCLUDES BARRIER WALL)

BW EL 273.400 — BOTTOM OF WALL ELEVATION

PILE AND ANCHORS

LCW18-1 — LOAD CELL (1-TOP ANCHOR, 2-BOTTOM ANCHOR)

**PRELIMINARY**

**PLANS**

COORDINATES ARE NAD/83(1995), ARE DATUM ADJUSTED BY THE FACTOR OF 1.000 AND TIED TO THE TGRN. ALL ELEVATIONS ARE REFERENCED TO THE NAVD 1988.

STATE OF TENNESSEE
DEPARTMENT OF TRANSPORTATION

# PROFILE RETAINING WALL NO. 7

STA.6+215 TO STA.6+275

SCALE: 1:200 HORIZ.
1:200 VERT.

9/10/2015
R:_Infrastructure Project Files\2015 Infra Projects\768I-15-002 ALCOA Hwy (SR 115) WALLS 7 AND 8\06 - CADD\12_RETAINING WALL NO.7 PROFILE STA.6+215 TO STA 6+275.sht

| TYPE | YEAR | PROJECT NO. | SHEET NO. |
|---|---|---|---|
| CONST. | 2015 | 47026-3279-14 | 2P8 |
| | | | |
| | | | |
| | | | |

**PILE SCHEDULE FOR:** **Wall 7**

| Pile # | Pile size (GR345) | Station | Offest (m) | Top Elevation (m) | Bottom of Wall Elevation (m) | Minimum Embedment Depth (m) | Tip Elevation (m) | Total Length (m) |
|---|---|---|---|---|---|---|---|---|
| P1 | HP360x109 | 11+730.09 | -80.65 | 290.13 | 286.45 | 4.57 | 281.88 | 8.25 |
| P2 | HP360x109 | 11+731.92 | -80.67 | 290.47 | 286.66 | 4.57 | 282.09 | 8.39 |
| P3 | HP360x109 | 11+733.75 | -80.67 | 290.82 | 286.86 | 4.57 | 282.29 | 8.52 |
| P4 | HP360x109 | 11+735.58 | -80.66 | 291.16 | 287.07 | 4.57 | 282.50 | 8.66 |
| P5 | HP360x109 | 11+737.41 | -80.63 | 291.50 | 287.27 | 4.57 | 282.70 | 8.80 |
| P6 | HP360x109 | 11+739.24 | -80.59 | 291.84 | 287.48 | 4.57 | 282.91 | 8.94 |
| P7 | HP360x109 | 11+741.04 | -80.53 | 292.18 | 287.68 | 4.57 | 283.11 | 9.07 |
| P8 | HP360x109 | 11+742.87 | -80.48 | 292.52 | 287.89 | 4.57 | 283.31 | 9.21 |
| P9 | HP360x109 | 11+744.70 | -80.43 | 292.87 | 288.09 | 4.57 | 283.52 | 9.35 |
| P10 | HP360x109 | 11+746.52 | -80.37 | 293.21 | 288.30 | 4.57 | 283.72 | 9.48 |
| P11 | HP360x109 | 11+748.35 | -80.32 | 293.55 | 288.50 | 4.57 | 283.93 | 9.62 |
| P12 | HP360x109 | 06+000.26 | -20.57 | 293.87 | 288.71 | 4.57 | 284.13 | 9.74 |
| P13 | HP360x109 | 06+002.08 | -20.57 | 294.07 | 288.92 | 4.57 | 284.35 | 9.72 |
| P14 | HP360x109 | 06+003.91 | -20.57 | 294.27 | 289.13 | 4.57 | 284.56 | 9.71 |
| P15 | HP360x109 | 06+005.74 | -20.57 | 294.46 | 289.34 | 4.57 | 284.77 | 9.69 |
| P16 | HP360x109 | 06+007.57 | -20.57 | 294.66 | 289.56 | 4.57 | 284.98 | 9.68 |
| P17 | HP360x109 | 06+009.40 | -20.57 | 294.86 | 289.77 | 4.57 | 285.20 | 9.66 |
| P18 | HP360x109 | 06+011.23 | -20.57 | 295.06 | 289.98 | 4.57 | 285.41 | 9.65 |
| P19 | HP360x109 | 06+013.06 | -20.57 | 295.25 | 290.19 | 4.57 | 285.62 | 9.63 |
| P20 | HP360x109 | 06+014.89 | -20.57 | 295.45 | 290.41 | 4.57 | 285.83 | 9.62 |
| P21 | HP360x109 | 06+016.71 | -20.57 | 295.65 | 290.62 | 4.57 | 286.05 | 9.60 |
| P22 | HP360x109 | 06+018.54 | -20.57 | 295.85 | 290.83 | 4.57 | 286.26 | 9.59 |
| P23 | HP360x109 | 06+020.37 | -20.57 | 296.03 | 291.03 | 4.57 | 286.45 | 9.58 |
| P24 | HP360x109 | 06+022.20 | -20.57 | 296.18 | 291.14 | 4.57 | 286.57 | 9.61 |
| P25 | HP360x109 | 06+024.03 | -20.57 | 296.33 | 291.26 | 4.57 | 286.69 | 9.64 |
| P26 | HP360x109 | 06+025.86 | -20.57 | 296.48 | 291.38 | 4.57 | 286.81 | 9.67 |
| P27 | HP360x109 | 06+027.69 | -20.57 | 296.63 | 291.50 | 4.57 | 286.93 | 9.70 |
| P28 | HP360x109 | 06+029.52 | -20.57 | 296.78 | 291.62 | 4.57 | 287.05 | 9.73 |
| P29 | HP360x109 | 06+031.35 | -20.57 | 296.93 | 291.74 | 4.57 | 287.17 | 9.76 |
| P30 | HP360x109 | 06+033.17 | -20.57 | 297.08 | 291.86 | 4.57 | 287.29 | 9.80 |
| P31 | HP360x109 | 06+035.00 | -20.57 | 297.23 | 291.98 | 4.57 | 287.40 | 9.83 |
| P32 | HP360x109 | 06+036.83 | -20.57 | 297.38 | 292.10 | 4.57 | 287.52 | 9.86 |
| P33 | HP360x109 | 06+038.66 | -20.57 | 297.53 | 292.21 | 4.57 | 287.64 | 9.89 |
| P34 | HP360x109 | 06+040.49 | -20.57 | 297.71 | 292.36 | 4.57 | 287.78 | 9.92 |
| P35 | HP360x109 | 06+042.32 | -20.57 | 297.95 | 292.56 | 4.57 | 287.98 | 9.97 |
| P36 | HP360x109 | 06+044.15 | -20.57 | 298.20 | 292.76 | 4.57 | 288.19 | 10.02 |
| P37 | HP360x109 | 06+045.98 | -20.57 | 298.45 | 292.96 | 4.57 | 288.39 | 10.06 |
| P38 | HP360x109 | 06+047.80 | -20.57 | 298.70 | 293.16 | 4.57 | 288.59 | 10.11 |
| P39 | HP360x109 | 06+049.63 | -20.57 | 298.95 | 293.36 | 4.57 | 288.79 | 10.16 |
| P40 | HP360x109 | 06+051.46 | -20.57 | 299.20 | 293.56 | 4.57 | 288.99 | 10.21 |
| P41 | HP360x109 | 06+053.29 | -20.57 | 299.44 | 293.76 | 4.57 | 289.19 | 10.25 |
| P42 | HP360x109 | 06+055.12 | -20.57 | 299.69 | 293.96 | 4.57 | 289.39 | 10.30 |
| P43 | HP360x109 | 06+056.95 | -20.57 | 299.94 | 294.17 | 4.57 | 289.59 | 10.35 |
| P44 | HP360x109 | 06+058.78 | -20.57 | 300.19 | 294.37 | 4.57 | 289.79 | 10.40 |
| P45 | HP360x109 | 06+060.61 | -20.57 | 300.36 | 294.48 | 4.57 | 289.91 | 10.45 |
| P46 | HP360x109 | 06+062.43 | -20.57 | 300.38 | 294.42 | 4.57 | 289.85 | 10.53 |
| P47 | HP360x109 | 06+064.26 | -20.57 | 300.40 | 294.36 | 4.57 | 289.79 | 10.61 |
| P48 | HP360x109 | 06+066.09 | -20.57 | 300.42 | 294.30 | 4.57 | 289.73 | 10.69 |
| P49 | HP360x109 | 06+067.92 | -20.57 | 300.43 | 294.24 | 4.57 | 289.67 | 10.77 |
| P50 | HP360x109 | 06+069.75 | -20.57 | 300.45 | 294.18 | 4.57 | 289.60 | 10.85 |
| P51 | HP360x109 | 06+071.58 | -20.57 | 300.47 | 294.12 | 4.57 | 289.54 | 10.93 |
| P52 | HP360x109 | 06+073.41 | -20.57 | 300.49 | 294.05 | 4.57 | 289.48 | 11.00 |
| P53 | HP360x109 | 06+075.24 | -20.57 | 300.51 | 293.99 | 4.57 | 289.42 | 11.08 |
| P54 | HP360x109 | 06+077.07 | -20.57 | 300.52 | 293.93 | 4.57 | 289.36 | 11.16 |
| P55 | HP360x109 | 06+078.89 | -20.57 | 300.54 | 293.87 | 4.57 | 289.30 | 11.24 |
| P56 | HP360x109 | 06+080.72 | -20.57 | 300.52 | 293.81 | 4.57 | 289.24 | 11.28 |
| P57 | HP360x109 | 06+082.55 | -20.57 | 300.42 | 293.75 | 4.57 | 289.18 | 11.24 |
| P58 | HP360x109 | 06+084.38 | -20.57 | 300.33 | 293.69 | 4.57 | 289.12 | 11.21 |
| P59 | HP360x109 | 06+086.21 | -20.57 | 300.23 | 293.63 | 4.57 | 289.06 | 11.18 |
| P60 | HP360x109 | 06+088.04 | -20.57 | 300.14 | 293.57 | 4.57 | 288.99 | 11.15 |
| P61 | HP360x109 | 06+089.87 | -20.57 | 300.05 | 293.51 | 4.57 | 288.93 | 11.11 |
| P62 | HP360x109 | 06+091.70 | -20.57 | 299.95 | 293.44 | 4.57 | 288.87 | 11.08 |
| P63 | HP360x109 | 06+093.52 | -20.57 | 299.86 | 293.38 | 4.57 | 288.81 | 11.05 |
| P64 | HP360x109 | 06+095.35 | -20.57 | 299.77 | 293.32 | 4.57 | 288.75 | 11.02 |
| P65 | HP360x109 | 06+097.18 | -20.57 | 299.67 | 293.26 | 4.57 | 288.69 | 10.98 |
| P66 | HP360x109 | 06+099.01 | -20.57 | 299.58 | 293.20 | 4.57 | 288.63 | 10.95 |
| P67 | HP360x109 | 06+100.84 | -20.57 | 299.50 | 293.14 | 4.57 | 288.57 | 10.93 |
| P68 | HP360x109 | 06+102.67 | -20.57 | 299.44 | 293.08 | 4.57 | 288.51 | 10.93 |
| P69 | HP360x109 | 06+104.50 | -20.57 | 299.37 | 293.02 | 4.57 | 288.45 | 10.93 |
| P70 | HP360x109 | 06+106.33 | -20.57 | 299.31 | 292.96 | 4.57 | 288.39 | 10.92 |
| P71 | HP360x109 | 06+108.15 | -20.57 | 299.25 | 292.90 | 4.57 | 288.32 | 10.92 |
| P72 | HP360x109 | 06+109.98 | -20.57 | 299.18 | 292.84 | 4.57 | 288.26 | 10.92 |
| P73 | HP360x109 | 06+111.81 | -20.57 | 299.12 | 292.77 | 4.57 | 288.20 | 10.92 |
| P74 | HP360x109 | 06+113.64 | -20.57 | 299.06 | 292.71 | 4.57 | 288.14 | 10.92 |
| P75 | HP360x109 | 06+115.47 | -20.57 | 298.99 | 292.65 | 2.13 | 290.52 | 8.47 |
| P76 | HP360x109 | 06+117.30 | -20.57 | 298.93 | 292.59 | 2.13 | 290.46 | 8.47 |
| P77 | HP360x109 | 06+119.13 | -20.57 | 298.87 | 292.53 | 4.57 | 287.96 | 10.91 |
| P78 | HP360x109 | 06+120.96 | -20.57 | 298.75 | 292.43 | 4.57 | 287.86 | 10.89 |
| P79 | HP360x109 | 06+122.79 | -20.57 | 298.59 | 292.30 | 4.57 | 287.73 | 10.86 |
| P80 | HP360x109 | 06+124.61 | -20.57 | 298.42 | 292.17 | 4.57 | 287.60 | 10.82 |
| P81 | HP360x109 | 06+126.44 | -20.57 | 298.26 | 292.04 | 4.57 | 287.47 | 10.79 |
| P82 | HP360x109 | 06+128.27 | -20.57 | 298.09 | 291.91 | 4.57 | 287.34 | 10.76 |
| P83 | HP360x109 | 06+130.10 | -20.57 | 297.93 | 291.78 | 4.57 | 287.21 | 10.72 |
| P84 | HP360x109 | 06+131.93 | -20.57 | 297.77 | 291.65 | 4.57 | 287.07 | 10.69 |
| P85 | HP360x109 | 06+133.76 | -20.57 | 297.60 | 291.52 | 4.57 | 286.94 | 10.66 |
| P86 | HP360x109 | 06+135.59 | -20.57 | 297.44 | 291.38 | 4.57 | 286.81 | 10.62 |
| P87 | HP360x109 | 06+137.42 | -20.57 | 297.27 | 291.25 | 4.57 | 286.68 | 10.59 |
| P88 | HP360x109 | 06+139.24 | -20.57 | 297.11 | 291.12 | 4.57 | 286.55 | 10.56 |
| P89 | HP360x109 | 06+141.07 | -20.57 | 296.96 | 290.99 | 4.57 | 286.42 | 10.54 |
| P90 | HP360x109 | 06+142.90 | -20.57 | 296.82 | 290.86 | 4.57 | 286.29 | 10.53 |
| P91 | HP360x109 | 06+144.73 | -20.57 | 296.67 | 290.73 | 4.57 | 286.16 | 10.51 |
| P92 | HP360x109 | 06+146.56 | -20.57 | 296.53 | 290.60 | 4.57 | 286.03 | 10.50 |
| P93 | HP360x109 | 06+148.39 | -20.57 | 296.39 | 290.47 | 4.57 | 285.90 | 10.49 |
| P94 | HP360x109 | 06+150.22 | -20.57 | 296.25 | 290.34 | 4.57 | 285.76 | 10.48 |
| P95 | HP360x109 | 06+152.05 | -20.57 | 296.10 | 290.20 | 4.57 | 285.63 | 10.47 |
| P96 | HP360x109 | 06+153.87 | -20.57 | 295.96 | 290.07 | 4.57 | 285.50 | 10.46 |
| P97 | HP360x109 | 06+155.70 | -20.57 | 295.82 | 289.94 | 4.57 | 285.37 | 10.45 |
| P98 | HP360x109 | 06+157.53 | -20.57 | 295.68 | 289.81 | 4.57 | 285.24 | 10.44 |
| P99 | HP360x109 | 06+159.36 | -20.57 | 295.54 | 289.68 | 4.57 | 285.11 | 10.43 |
| P100 | HP360x109 | 06+161.19 | -20.57 | 295.38 | 289.55 | 4.57 | 284.98 | 10.40 |
| P101 | HP360x109 | 06+163.02 | -20.57 | 295.22 | 289.42 | 4.57 | 284.85 | 10.37 |
| P102 | HP360x109 | 06+164.85 | -20.57 | 295.06 | 289.29 | 4.57 | 284.72 | 10.34 |
| P103 | HP360x109 | 06+166.68 | -20.57 | 294.90 | 289.16 | 2.13 | 287.03 | 7.87 |
| P104 | HP360x109 | 06+168.51 | -20.57 | 294.74 | 289.03 | 2.13 | 286.90 | 7.84 |
| P105 | HP360x109 | 06+170.33 | -20.57 | 294.58 | 288.89 | 2.13 | 286.76 | 7.81 |
| P106 | HP360x109 | 06+172.16 | -20.57 | 294.42 | 288.76 | 2.13 | 286.63 | 7.78 |
| P107 | HP360x109 | 06+173.99 | -20.57 | 294.25 | 288.63 | 2.13 | 286.50 | 7.75 |
| P108 | HP360x109 | 06+175.82 | -20.57 | 294.09 | 288.50 | 2.13 | 286.37 | 7.72 |
| P109 | HP360x109 | 06+177.65 | -20.57 | 293.93 | 288.37 | 2.13 | 286.24 | 7.69 |
| P110 | HP360x109 | 06+179.48 | -20.57 | 293.77 | 288.24 | 2.13 | 286.11 | 7.66 |
| P111 | HP360x109 | 06+181.31 | -20.57 | 293.66 | 288.13 | 2.13 | 286.00 | 7.67 |
| P112 | HP360x109 | 06+183.14 | -20.57 | 293.57 | 288.02 | 2.13 | 285.89 | 7.68 |
| P113 | HP360x109 | 06+184.96 | -20.57 | 293.49 | 287.92 | 2.13 | 285.79 | 7.70 |
| P114 | HP360x109 | 06+186.79 | -20.57 | 293.40 | 287.81 | 2.13 | 285.68 | 7.72 |
| P115 | HP360x109 | 06+188.62 | -20.57 | 293.31 | 287.71 | 2.13 | 285.58 | 7.73 |
| P116 | HP360x109 | 06+190.45 | -20.57 | 293.22 | 287.60 | 2.13 | 285.47 | 7.75 |
| P117 | HP360x109 | 06+192.28 | -20.57 | 293.13 | 287.50 | 2.13 | 285.37 | 7.77 |
| P118 | HP360x109 | 06+194.11 | -20.57 | 293.04 | 287.39 | 2.13 | 285.26 | 7.78 |
| P119 | HP360x109 | 06+195.94 | -20.57 | 292.96 | 287.29 | 2.13 | 285.16 | 7.80 |
| P120 | HP360x109 | 06+197.77 | -20.57 | 292.87 | 287.18 | 2.13 | 285.05 | 7.82 |
| P121 | HP360x109 | 06+199.59 | -20.57 | 292.78 | 287.07 | 2.13 | 284.94 | 7.83 |
| P122 | HP360x109 | 06+201.42 | -20.57 | 292.65 | 286.97 | 2.13 | 284.84 | 7.81 |
| P123 | HP360x109 | 06+203.25 | -20.57 | 292.52 | 286.86 | 4.57 | 282.29 | 10.23 |
| P124 | HP360x109 | 06+205.08 | -20.57 | 292.38 | 286.76 | 4.57 | 282.19 | 10.20 |
| P125 | HP360x109 | 06+206.91 | -20.57 | 292.25 | 286.65 | 4.57 | 282.08 | 10.17 |
| P126 | HP360x109 | 06+208.74 | -20.57 | 292.11 | 286.55 | 2.13 | 284.42 | 7.69 |
| P127 | HP360x109 | 06+210.57 | -20.57 | 291.98 | 286.44 | 2.13 | 284.31 | 7.66 |
| P128 | HP360x109 | 06+212.40 | -20.57 | 291.84 | 286.34 | 2.13 | 284.21 | 7.63 |
| P129 | HP360x109 | 06+214.23 | -20.57 | 291.71 | 286.23 | 2.13 | 284.10 | 7.60 |
| P130 | HP360x109 | 06+216.05 | -20.57 | 291.57 | 286.13 | 2.13 | 284.00 | 7.57 |
| P131 | HP360x109 | 06+217.88 | -20.57 | 291.44 | 286.02 | 2.13 | 283.89 | 7.54 |
| P132 | HP360x109 | 06+219.71 | -20.57 | 291.30 | 285.92 | 2.13 | 283.79 | 7.51 |

**PILE SCHEDULE FOR:** **Wall 7 (CONTINUED)**

| Pile # | Pile size (GR50) | Station | Offest (m) | Top Elevation (m) | Bottom of Wall Elevation (m) | Minimum Embedment Depth (m) | Tip Elevation (m) | Total Length (m) |
|---|---|---|---|---|---|---|---|---|
| P133 | HP360x109 | 06+221.54 | -20.57 | 290.97 | 285.62 | 2.13 | 283.49 | 7.48 |
| P134 | HP360x109 | 06+223.37 | -20.57 | 290.61 | 285.30 | 2.13 | 283.17 | 7.44 |
| P135 | HP360x109 | 06+225.20 | -20.57 | 290.24 | 284.97 | 2.13 | 282.84 | 7.41 |
| P136 | HP360x109 | 06+227.03 | -20.57 | 289.88 | 284.64 | 2.13 | 282.51 | 7.37 |
| P137 | HP360x109 | 06+228.86 | -20.57 | 289.51 | 284.31 | 2.13 | 282.18 | 7.34 |
| P138 | HP360x109 | 06+230.68 | -20.57 | 289.15 | 283.98 | 2.13 | 281.85 | 7.30 |
| P139 | HP360x109 | 06+232.51 | -20.57 | 288.78 | 283.65 | 2.13 | 281.52 | 7.26 |
| P140 | HP360x109 | 06+234.34 | -20.57 | 288.42 | 283.32 | 2.13 | 281.19 | 7.23 |
| P141 | HP360x109 | 06+236.17 | -20.57 | 288.05 | 282.99 | 2.13 | 280.86 | 7.19 |
| P142 | HP360x109 | 06+238.00 | -20.57 | 287.69 | 282.66 | 2.13 | 280.53 | 7.16 |
| P143 | HP360x109 | 06+239.83 | -20.57 | 287.32 | 282.33 | 2.13 | 280.20 | 7.12 |
| P144 | HP360x109 | 06+241.66 | -20.57 | 286.82 | 281.81 | 4.57 | 277.24 | 9.58 |
| P145 | HP360x109 | 06+243.49 | -20.57 | 286.29 | 281.27 | 4.57 | 276.70 | 9.59 |
| P146 | HP360x109 | 06+245.31 | -20.57 | 285.77 | 280.73 | 2.13 | 278.60 | 7.17 |
| P147 | HP360x109 | 06+247.14 | -20.57 | 285.25 | 280.19 | 2.13 | 278.06 | 7.19 |
| P148 | HP360x109 | 06+248.97 | -20.57 | 284.73 | 279.65 | 2.13 | 277.52 | 7.21 |
| P149 | HP360x109 | 06+250.80 | -20.57 | 284.21 | 279.12 | 2.13 | 276.99 | 7.22 |
| P150 | HP360x109 | 06+252.63 | -20.57 | 283.69 | 278.58 | 2.13 | 276.45 | 7.24 |
| P151 | HP360x109 | 06+254.46 | -20.57 | 283.17 | 278.04 | 2.13 | 275.91 | 7.26 |
| P152 | HP360x109 | 06+256.29 | -20.57 | 282.65 | 277.50 | 2.13 | 275.37 | 7.28 |
| P153 | HP360x109 | 06+258.12 | -20.57 | 282.12 | 276.96 | 2.13 | 274.83 | 7.30 |
| P154 | HP360x109 | 06+259.95 | -20.57 | 281.60 | 276.42 | 2.13 | 274.29 | 7.32 |
| P155 | HP360x109 | 06+261.77 | -20.57 | 280.88 | 275.88 | 2.13 | 273.75 | 7.13 |
| P156 | HP360x109 | 06+263.60 | -20.57 | 280.14 | 275.33 | 2.13 | 273.20 | 6.94 |
| P157 | HP360x109 | 06+265.43 | -20.57 | 279.41 | 274.79 | 2.13 | 272.66 | 6.75 |
| P158 | HP360x109 | 06+267.26 | -20.57 | 278.67 | 274.25 | 2.13 | 272.12 | 6.55 |
| P159 | HP360x109 | 06+269.09 | -20.57 | 277.94 | 273.71 | 2.13 | 271.58 | 6.36 |
| P160 | HP360x109 | 06+270.92 | -20.57 | 277.21 | 273.17 | 2.13 | 271.04 | 6.17 |
| P161 | HP360x109 | 06+272.75 | -20.57 | 276.47 | 272.63 | 2.13 | 270.50 | 5.98 |
| P162 | HP360x109 | 06+274.58 | -20.57 | 275.74 | 272.08 | 2.13 | 269.95 | 5.78 |

**ANCHOR SCHEDULE FOR:** **Wall 7**
**Row 1**

| Pile # | No. of Anchors (ea) | Elevation (m) | Angle of Inclination (deg) | No. of Strands per Anchor | Design Load (kN) | Test Load (kN) | Minimum Anchor Free Length (m) |
|---|---|---|---|---|---|---|---|
| P1 | 1 | 288.6 | 20.0 | 4 | 578.0 | 770.5 | 37.5 |
| P2 | 1 | 288.9 | 20.0 | 4 | 578.0 | 770.5 | 37.5 |
| P3 | 1 | 289.3 | 20.0 | 4 | 578.0 | 770.5 | 37.5 |
| P4 | 1 | 289.6 | 20.0 | 4 | 578.0 | 770.5 | 37.5 |
| P5 | 1 | 290.0 | 20.0 | 4 | 578.0 | 770.5 | 37.5 |
| P6 | 1 | 290.3 | 20.0 | 4 | 578.0 | 770.5 | 37.5 |
| P7 | 1 | 290.7 | 20.0 | 4 | 578.0 | 770.5 | 37.5 |
| P8 | 1 | 291.0 | 20.0 | 4 | 578.0 | 770.5 | 37.5 |
| P9 | 1 | 291.3 | 20.0 | 4 | 578.0 | 770.5 | 37.5 |
| P10 | 1 | 291.7 | 20.0 | 4 | 578.0 | 770.5 | 30.0 |
| P11 | 1 | 292.0 | 20.0 | 4 | 578.0 | 770.5 | 30.0 |
| P12 | 1 | 292.3 | 20.0 | 4 | 578.0 | 770.5 | 30.0 |
| P13 | 1 | 292.5 | 20.0 | 4 | 578.0 | 770.5 | 30.0 |
| P14 | 1 | 292.7 | 20.0 | 4 | 578.0 | 770.5 | 30.0 |
| P15 | 1 | 292.9 | 20.0 | 4 | 578.0 | 770.5 | 30.0 |
| P16 | 1 | 293.1 | 20.0 | 4 | 578.0 | 770.5 | 30.0 |
| P17 | 1 | 293.3 | 20.0 | 4 | 578.0 | 770.5 | 30.0 |
| P18 | 1 | 293.5 | 20.0 | 4 | 578.0 | 770.5 | 27.0 |
| P19 | 1 | 293.7 | 20.0 | 4 | 578.0 | 770.5 | 27.0 |
| P20 | 1 | 293.9 | 20.0 | 4 | 578.0 | 770.5 | 27.0 |
| P21 | 1 | 294.1 | 20.0 | 4 | 578.0 | 770.5 | 27.0 |
| P22 | 1 | 294.3 | 20.0 | 4 | 578.0 | 770.5 | 27.0 |
| P23 | 1 | 294.5 | 20.0 | 4 | 578.0 | 770.5 | 27.0 |
| P24 | 1 | 294.7 | 20.0 | 4 | 578.0 | 770.5 | 27.0 |
| P25 | 1 | 294.8 | 20.0 | 4 | 578.0 | 770.5 | 27.0 |
| P26 | 1 | 295.0 | 20.0 | 4 | 578.0 | 770.5 | 27.0 |
| P27 | 1 | 295.1 | 20.0 | 4 | 578.0 | 770.5 | 27.0 |
| P28 | 1 | 295.3 | 20.0 | 4 | 578.0 | 770.5 | 27.0 |
| P29 | 1 | 295.4 | 20.0 | 4 | 578.0 | 770.5 | 24.5 |
| P30 | 1 | 295.6 | 20.0 | 4 | 578.0 | 770.5 | 24.5 |
| P31 | 1 | 295.7 | 20.0 | 4 | 578.0 | 770.5 | 24.5 |
| P32 | 1 | 295.9 | 20.0 | 4 | 578.0 | 770.5 | 24.5 |
| P33 | 1 | 296.0 | 20.0 | 4 | 578.0 | 770.5 | 24.5 |
| P34 | 1 | 296.2 | 20.0 | 4 | 578.0 | 770.5 | 24.5 |
| P35 | 1 | 296.4 | 20.0 | 4 | 578.0 | 770.5 | 24.5 |
| P36 | 1 | 296.7 | 20.0 | 4 | 578.0 | 770.5 | 24.5 |
| P37 | 1 | 296.9 | 20.0 | 4 | 578.0 | 770.5 | 24.5 |
| P38 | 1 | 297.2 | 20.0 | 4 | 578.0 | 770.5 | 20.0 |
| P39 | 1 | 297.4 | 20.0 | 4 | 578.0 | 770.5 | 20.0 |
| P40 | 1 | 297.7 | 20.0 | 4 | 578.0 | 770.5 | 20.0 |
| P41 | 1 | 297.9 | 20.0 | 4 | 578.0 | 770.5 | 20.0 |
| P42 | 1 | 298.2 | 20.0 | 4 | 578.0 | 770.5 | 20.0 |
| P43 - P56 | 14 | 298.4 | 20.0 | 4 | 578.0 | 770.5 | 20.0 |
| P57 | 1 | 298.3 | 20.0 | 4 | 578.0 | 770.5 | 20.0 |
| P58 | 1 | 298.2 | 20.0 | 4 | 578.0 | 770.5 | 20.0 |
| P59 | 1 | 298.1 | 20.0 | 4 | 578.0 | 770.5 | 20.0 |
| P60 | 1 | 298.0 | 20.0 | 4 | 578.0 | 770.5 | 20.0 |
| P61 | 1 | 297.9 | 20.0 | 4 | 578.0 | 770.5 | 20.0 |
| P62 | 1 | 297.8 | 20.0 | 4 | 578.0 | 770.5 | 20.0 |
| P63 | 1 | 297.7 | 20.0 | 4 | 578.0 | 770.5 | 20.0 |
| P64 | 1 | 297.6 | 20.0 | 4 | 578.0 | 770.5 | 20.0 |
| P65 | 1 | 297.5 | 20.0 | 4 | 578.0 | 770.5 | 20.0 |
| P66 - P67 | 2 | 297.4 | 20.0 | 4 | 578.0 | 770.5 | 20.0 |
| P68 | 1 | 297.3 | 20.0 | 4 | 578.0 | 770.5 | 20.0 |
| P69 - P70 | 2 | 297.2 | 20.0 | 4 | 578.0 | 770.5 | 20.0 |
| P71 - P72 | 2 | 297.1 | 20.0 | 4 | 578.0 | 770.5 | 20.0 |
| P73 | 1 | 297.0 | 20.0 | 4 | 578.0 | 770.5 | 20.0 |
| P74 - P75 | 2 | 296.9 | 20.0 | 4 | 578.0 | 770.5 | 20.0 |
| P76 | 1 | 296.8 | 20.0 | 4 | 578.0 | 770.5 | 20.0 |
| P77 | 1 | 296.7 | 20.0 | 4 | 578.0 | 770.5 | 20.0 |
| P78 | 1 | 296.6 | 20.0 | 4 | 578.0 | 770.5 | 20.0 |
| P79 | 1 | 296.5 | 20.0 | 4 | 578.0 | 770.5 | 20.0 |
| P80 | 1 | 296.3 | 20.0 | 4 | 578.0 | 770.5 | 20.0 |
| P81 | 1 | 296.1 | 20.0 | 4 | 578.0 | 770.5 | 20.0 |
| P82 | 1 | 296.0 | 20.0 | 4 | 578.0 | 770.5 | 20.0 |
| P83 | 1 | 295.8 | 20.0 | 4 | 578.0 | 770.5 | 20.0 |
| P84 | 1 | 295.6 | 20.0 | 4 | 578.0 | 770.5 | 20.0 |
| P85 | 1 | 295.5 | 20.0 | 4 | 578.0 | 770.5 | 20.0 |
| P86 | 1 | 295.3 | 20.0 | 4 | 578.0 | 770.5 | 20.0 |
| P87 - P90 | 4 | 295.2 | 20.0 | 4 | 578.0 | 770.5 | 20.0 |
| P91 | 1 | 295.1 | 20.0 | 4 | 578.0 | 770.5 | 20.0 |
| P92 | 1 | 295.0 | 20.0 | 4 | 578.0 | 770.5 | 20.0 |
| P93 | 1 | 294.9 | 20.0 | 4 | 578.0 | 770.5 | 20.0 |
| P94 | 1 | 294.7 | 20.0 | 4 | 578.0 | 770.5 | 20.0 |
| P95 | 1 | 294.6 | 20.0 | 4 | 578.0 | 770.5 | 20.0 |
| P96 | 1 | 294.4 | 20.0 | 4 | 578.0 | 770.5 | 20.0 |
| P97 | 1 | 294.3 | 20.0 | 4 | 578.0 | 770.5 | 20.0 |
| P98 | 1 | 294.2 | 20.0 | 4 | 578.0 | 770.5 | 20.0 |
| P99 | 1 | 294.0 | 20.0 | 4 | 578.0 | 770.5 | 20.0 |
| P100 | 1 | 293.9 | 20.0 | 4 | 578.0 | 770.5 | 20.0 |
| P101 | 1 | 293.7 | 20.0 | 4 | 578.0 | 770.5 | 20.0 |
| P102 | 1 | 293.5 | 20.0 | 4 | 578.0 | 770.5 | 20.0 |
| P103 | 1 | 293.4 | 20.0 | 4 | 578.0 | 770.5 | 20.0 |
| P104 | 1 | 293.2 | 20.0 | 4 | 578.0 | 770.5 | 20.0 |
| P105 | 1 | 293.1 | 20.0 | 4 | 578.0 | 770.5 | 20.0 |
| P106 | 1 | 292.9 | 20.0 | 4 | 578.0 | 770.5 | 20.0 |
| P107 | 1 | 292.7 | 20.0 | 4 | 578.0 | 770.5 | 20.0 |
| P108 | 1 | 292.6 | 20.0 | 4 | 578.0 | 770.5 | 20.0 |
| P109 | 1 | 292.4 | 20.0 | 4 | 578.0 | 770.5 | 20.0 |
| P110 | 1 | 292.2 | 20.0 | 4 | 578.0 | 770.5 | 20.0 |
| P111 | 1 | 292.1 | 20.0 | 4 | 578.0 | 770.5 | 20.0 |
| P112 - P113 | 2 | 292.0 | 20.0 | 4 | 578.0 | 770.5 | 20.0 |
| P114 | 1 | 291.9 | 20.0 | 4 | 578.0 | 770.5 | 20.0 |
| P115 | 1 | 291.8 | 20.0 | 4 | 578.0 | 770.5 | 20.0 |
| P116 | 1 | 291.7 | 20.0 | 4 | 578.0 | 770.5 | 20.0 |
| P117 | 1 | 291.6 | 20.0 | 4 | 578.0 | 770.5 | 20.0 |
| P118 | 1 | 291.5 | 20.0 | 4 | 578.0 | 770.5 | 20.0 |
| P119 | 1 | 291.4 | 20.0 | 4 | 578.0 | 770.5 | 20.0 |
| P120 - P121 | 2 | 291.3 | 20.0 | 4 | 578.0 | 770.5 | 20.0 |
| P122 | 1 | 291.1 | 20.0 | 4 | 578.0 | 770.5 | 20.0 |
| P123 | 1 | 291.0 | 20.0 | 4 | 578.0 | 770.5 | 20.0 |
| P124 | 1 | 290.9 | 20.0 | 4 | 578.0 | 770.5 | 20.0 |
| P125 | 1 | 290.7 | 20.0 | 4 | 578.0 | 770.5 | 20.0 |
| P126 | 1 | 290.6 | 20.0 | 4 | 578.0 | 770.5 | 20.0 |
| P127 | 1 | 290.5 | 20.0 | 4 | 578.0 | 770.5 | 20.0 |
| P128 | 1 | 290.3 | 20.0 | 4 | 578.0 | 770.5 | 20.0 |
| P129 | 1 | 290.2 | 20.0 | 4 | 578.0 | 770.5 | 20.0 |
| P130 | 1 | 290.0 | 20.0 | 4 | 578.0 | 770.5 | 20.0 |
| P131 | 1 | 289.9 | 20.0 | 4 | 578.0 | 770.5 | 20.0 |
| P132 | 1 | 289.8 | 20.0 | 4 | 578.0 | 770.5 | 20.0 |
| P133 | 1 | 289.4 | 20.0 | 4 | 578.0 | 770.5 | 15.0 |
| P134 | 1 | 289.1 | 20.0 | 4 | 578.0 | 770.5 | 15.0 |
| P135 | 1 | 288.7 | 20.0 | 4 | 578.0 | 770.5 | 15.0 |
| P136 | 1 | 288.4 | 20.0 | 4 | 578.0 | 770.5 | 15.0 |
| P137 | 1 | 288.0 | 20.0 | 4 | 578.0 | 770.5 | 15.0 |
| P138 | 1 | 287.6 | 20.0 | 4 | 578.0 | 770.5 | 15.0 |
| P139 | 1 | 287.3 | 20.0 | 4 | 578.0 | 770.5 | 15.0 |
| P140 | 1 | 286.9 | 20.0 | 4 | 578.0 | 770.5 | 15.0 |
| P141 | 1 | 286.5 | 20.0 | 4 | 578.0 | 770.5 | 15.0 |
| P142 | 1 | 286.2 | 20.0 | 4 | 578.0 | 770.5 | 15.0 |
| P143 | 1 | 285.8 | 20.0 | 4 | 578.0 | 770.5 | 15.0 |
| P144 | 1 | 285.3 | 20.0 | 4 | 578.0 | 770.5 | 15.0 |
| P145 | 1 | 284.8 | 20.0 | 4 | 578.0 | 770.5 | 15.0 |
| P146 | 1 | 284.2 | 20.0 | 4 | 578.0 | 770.5 | 15.0 |
| P147 | 1 | 283.7 | 20.0 | 4 | 578.0 | 770.5 | 15.0 |
| P148 | 1 | 283.2 | 20.0 | 4 | 578.0 | 770.5 | 15.0 |
| P149 | 1 | 282.7 | 20.0 | 4 | 578.0 | 770.5 | 15.0 |
| P150 | 1 | 282.2 | 20.0 | 4 | 578.0 | 770.5 | 15.0 |
| P151 | 1 | 281.6 | 20.0 | 4 | 578.0 | 770.5 | 15.0 |
| P152 | 1 | 281.1 | 20.0 | 4 | 578.0 | 770.5 | 15.0 |
| P153 | 1 | 280.6 | 20.0 | 4 | 578.0 | 770.5 | 15.0 |
| P154 | 1 | 280.1 | 20.0 | 4 | 578.0 | 770.5 | 15.0 |
| P155 | 1 | 279.4 | 20.0 | 4 | 578.0 | 770.5 | 15.0 |
| P156 | 1 | 278.6 | 20.0 | 4 | 578.0 | 770.5 | 15.0 |
| P157 | 1 | 277.9 | 20.0 | 4 | 578.0 | 770.5 | 15.0 |
| P158 | 1 | 277.1 | 20.0 | 4 | 578.0 | 770.5 | 15.0 |
| P159 | 1 | 276.4 | 20.0 | 4 | 578.0 | 770.5 | 15.0 |
| P160 | 1 | 275.7 | 20.0 | 4 | 578.0 | 770.5 | 15.0 |
| P161 | 1 | 274.9 | 20.0 | 4 | 578.0 | 770.5 | 15.0 |
| P162 | 1 | 274.2 | 20.0 | 4 | 578.0 | 770.5 | 15.0 |

**ANCHOR SCHEDULE FOR:** **Wall 7 (CONTINUED)**
**Row 2**

| Pile # | No. of Anchors (ea) | Elevation (m) | Angle of Inclination (deg) | No. of Strands per Anchor | Design Load (kN) | Test Load (kN) | Minimum Anchor Free Length (m) |
|---|---|---|---|---|---|---|---|
| P10 | 1 | 290.4 | 20.0 | 4 | 578.0 | 770.5 | 27.5 |
| P11 | 1 | 290.6 | 20.0 | 4 | 578.0 | 770.5 | 27.5 |
| P12 | 1 | 290.8 | 20.0 | 4 | 578.0 | 770.5 | 27.5 |
| P13 | 1 | 291.0 | 20.0 | 4 | 578.0 | 770.5 | 27.5 |
| P14 | 1 | 291.2 | 20.0 | 4 | 578.0 | 770.5 | 27.5 |
| P15 | 1 | 291.4 | 20.0 | 4 | 578.0 | 770.5 | 27.5 |
| P16 | 1 | 291.6 | 20.0 | 4 | 578.0 | 770.5 | 27.5 |
| P17 | 1 | 291.8 | 20.0 | 4 | 578.0 | 770.5 | 27.5 |
| P18 | 1 | 292.1 | 20.0 | 4 | 578.0 | 770.5 | 25.5 |
| P19 | 1 | 292.3 | 20.0 | 4 | 578.0 | 770.5 | 25.5 |
| P20 | 1 | 292.5 | 20.0 | 4 | 578.0 | 770.5 | 25.5 |
| P21 | 1 | 292.7 | 20.0 | 4 | 578.0 | 770.5 | 25.5 |
| P22 | 1 | 292.9 | 20.0 | 4 | 578.0 | 770.5 | 25.5 |
| P23 | 1 | 293.1 | 20.0 | 4 | 578.0 | 770.5 | 25.5 |
| P24 | 1 | 293.2 | 20.0 | 4 | 578.0 | 770.5 | 25.5 |
| P25 | 1 | 293.3 | 20.0 | 4 | 578.0 | 770.5 | 25.5 |
| P26 | 1 | 293.4 | 20.0 | 4 | 578.0 | 770.5 | 25.5 |
| P27 | 1 | 293.6 | 20.0 | 4 | 578.0 | 770.5 | 25.5 |
| P28 | 1 | 293.7 | 20.0 | 4 | 578.0 | 770.5 | 25.5 |
| P29 | 1 | 293.8 | 20.0 | 4 | 578.0 | 770.5 | 24.0 |
| P30 | 1 | 293.9 | 20.0 | 4 | 578.0 | 770.5 | 24.0 |
| P31 | 1 | 294.0 | 20.0 | 4 | 578.0 | 770.5 | 24.0 |
| P32 | 1 | 294.1 | 20.0 | 4 | 578.0 | 770.5 | 24.0 |
| P33 | 1 | 294.3 | 20.0 | 4 | 578.0 | 770.5 | 24.0 |
| P34 | 1 | 294.4 | 20.0 | 4 | 578.0 | 770.5 | 24.0 |
| P35 | 1 | 294.6 | 20.0 | 4 | 578.0 | 770.5 | 24.0 |
| P36 | 1 | 294.8 | 20.0 | 4 | 578.0 | 770.5 | 24.0 |
| P37 | 1 | 295.1 | 20.0 | 4 | 578.0 | 770.5 | 24.0 |
| P38 | 1 | 295.3 | 20.0 | 4 | 578.0 | 770.5 | 20.0 |
| P39 | 1 | 295.6 | 20.0 | 4 | 578.0 | 770.5 | 20.0 |
| P40 | 1 | 295.8 | 20.0 | 4 | 578.0 | 770.5 | 20.0 |
| P41 | 1 | 296.1 | 20.0 | 4 | 578.0 | 770.5 | 20.0 |
| P42 | 1 | 296.3 | 20.0 | 4 | 578.0 | 770.5 | 20.0 |
| P43 - P56 | 14 | 296.6 | 20.0 | 4 | 578.0 | 770.5 | 20.0 |
| P57 | 1 | 296.5 | 20.0 | 4 | 578.0 | 770.5 | 20.0 |
| P58 | 1 | 296.4 | 20.0 | 4 | 578.0 | 770.5 | 20.0 |
| P59 | 1 | 296.3 | 20.0 | 4 | 578.0 | 770.5 | 20.0 |
| P60 | 1 | 296.2 | 20.0 | 4 | 578.0 | 770.5 | 20.0 |
| P61 | 1 | 296.1 | 20.0 | 4 | 578.0 | 770.5 | 20.0 |
| P62 | 1 | 296.0 | 20.0 | 4 | 578.0 | 770.5 | 20.0 |
| P63 | 1 | 295.9 | 20.0 | 4 | 578.0 | 770.5 | 20.0 |
| P64 | 1 | 295.8 | 20.0 | 4 | 578.0 | 770.5 | 20.0 |
| P65 | 1 | 295.7 | 20.0 | 4 | 578.0 | 770.5 | 20.0 |
| P66 - P67 | 2 | 295.6 | 20.0 | 4 | 578.0 | 770.5 | 20.0 |
| P68 | 1 | 295.5 | 20.0 | 4 | 578.0 | 770.5 | 20.0 |
| P69 - P70 | 2 | 295.4 | 20.0 | 4 | 578.0 | 770.5 | 20.0 |
| P71 - P72 | 2 | 295.3 | 20.0 | 4 | 578.0 | 770.5 | 20.0 |
| P73 | 1 | 295.2 | 20.0 | 4 | 578.0 | 770.5 | 20.0 |
| P74 - P75 | 2 | 295.1 | 20.0 | 4 | 578.0 | 770.5 | 20.0 |
| P76 | 1 | 295.0 | 20.0 | 4 | 578.0 | 770.5 | 20.0 |
| P77 | 1 | 294.9 | 20.0 | 4 | 578.0 | 770.5 | 20.0 |
| P78 | 1 | 294.8 | 20.0 | 4 | 578.0 | 770.5 | 20.0 |
| P79 | 1 | 294.6 | 20.0 | 4 | 578.0 | 770.5 | 20.0 |
| P80 | 1 | 294.5 | 20.0 | 4 | 578.0 | 770.5 | 20.0 |
| P81 | 1 | 294.3 | 20.0 | 4 | 578.0 | 770.5 | 20.0 |
| P82 | 1 | 294.1 | 20.0 | 4 | 578.0 | 770.5 | 20.0 |
| P83 | 1 | 294.0 | 20.0 | 4 | 578.0 | 770.5 | 20.0 |
| P84 | 1 | 293.8 | 20.0 | 4 | 578.0 | 770.5 | 20.0 |
| P85 | 1 | 293.6 | 20.0 | 4 | 578.0 | 770.5 | 20.0 |
| P86 | 1 | 293.5 | 20.0 | 4 | 578.0 | 770.5 | 20.0 |
| P87 - P90 | 4 | 293.4 | 20.0 | 4 | 578.0 | 770.5 | 20.0 |
| P91 | 1 | 293.3 | 20.0 | 4 | 578.0 | 770.5 | 20.0 |
| P92 | 1 | 293.2 | 20.0 | 4 | 578.0 | 770.5 | 20.0 |
| P93 | 1 | 293.0 | 20.0 | 4 | 578.0 | 770.5 | 20.0 |
| P94 | 1 | 292.9 | 20.0 | 4 | 578.0 | 770.5 | 20.0 |
| P95 | 1 | 292.8 | 20.0 | 4 | 578.0 | 770.5 | 20.0 |
| P96 | 1 | 292.6 | 20.0 | 4 | 578.0 | 770.5 | 20.0 |
| P97 | 1 | 292.5 | 20.0 | 4 | 578.0 | 770.5 | 20.0 |
| P98 | 1 | 292.3 | 20.0 | 4 | 578.0 | 770.5 | 20.0 |
| P99 | 1 | 292.2 | 20.0 | 4 | 578.0 | 770.5 | 20.0 |
| P100 | 1 | 292.0 | 20.0 | 4 | 578.0 | 770.5 | 20.0 |
| P101 | 1 | 291.9 | 20.0 | 4 | 578.0 | 770.5 | 20.0 |
| P102 | 1 | 291.7 | 20.0 | 4 | 578.0 | 770.5 | 20.0 |
| P103 | 1 | 291.5 | 20.0 | 4 | 578.0 | 770.5 | 20.0 |
| P104 | 1 | 291.4 | 20.0 | 4 | 578.0 | 770.5 | 20.0 |
| P105 | 1 | 291.2 | 20.0 | 4 | 578.0 | 770.5 | 20.0 |
| P106 | 1 | 291.1 | 20.0 | 4 | 578.0 | 770.5 | 20.0 |
| P107 | 1 | 290.9 | 20.0 | 4 | 578.0 | 770.5 | 20.0 |
| P108 | 1 | 290.7 | 20.0 | 4 | 578.0 | 770.5 | 20.0 |
| P109 | 1 | 290.6 | 20.0 | 4 | 578.0 | 770.5 | 20.0 |
| P110 | 1 | 290.4 | 20.0 | 4 | 578.0 | 770.5 | 20.0 |
| P111 | 1 | 290.3 | 20.0 | 4 | 578.0 | 770.5 | 20.0 |
| P112 - P113 | 2 | 290.2 | 20.0 | 4 | 578.0 | 770.5 | 20.0 |
| P114 | 1 | 290.0 | 20.0 | 4 | 578.0 | 770.5 | 20.0 |
| P115 | 1 | 290.0 | 20.0 | 4 | 578.0 | 770.5 | 20.0 |
| P116 | 1 | 289.9 | 20.0 | 4 | 578.0 | 770.5 | 20.0 |
| P117 | 1 | 289.8 | 20.0 | 4 | 578.0 | 770.5 | 20.0 |
| P118 | 1 | 289.7 | 20.0 | 4 | 578.0 | 770.5 | 20.0 |
| P119 | 1 | 289.6 | 20.0 | 4 | 578.0 | 770.5 | 20.0 |
| P120 - P121 | 2 | 289.5 | 20.0 | 4 | 578.0 | 770.5 | 20.0 |
| P122 | 1 | 289.3 | 20.0 | 4 | 578.0 | 770.5 | 20.0 |
| P123 | 1 | 289.2 | 20.0 | 4 | 578.0 | 770.5 | 20.0 |
| P124 | 1 | 289.0 | 20.0 | 4 | 578.0 | 770.5 | 20.0 |
| P125 | 1 | 288.9 | 20.0 | 4 | 578.0 | 770.5 | 20.0 |
| P126 | 1 | 288.8 | 20.0 | 4 | 578.0 | 770.5 | 20.0 |
| P127 | 1 | 288.6 | 20.0 | 4 | 578.0 | 770.5 | 20.0 |
| P128 | 1 | 288.5 | 20.0 | 4 | 578.0 | 770.5 | 20.0 |
| P129 | 1 | 288.4 | 20.0 | 4 | 578.0 | 770.5 | 20.0 |
| P130 | 1 | 288.2 | 20.0 | 4 | 578.0 | 770.5 | 20.0 |
| P131 | 1 | 288.1 | 20.0 | 4 | 578.0 | 770.5 | 20.0 |
| P132 | 1 | 288.0 | 20.0 | 4 | 578.0 | 770.5 | 20.0 |
| P133 | 1 | 287.7 | 20.0 | 4 | 578.0 | 770.5 | 15.0 |
| P134 | 1 | 287.3 | 20.0 | 4 | 578.0 | 770.5 | 15.0 |
| P135 | 1 | 287.0 | 20.0 | 4 | 578.0 | 770.5 | 15.0 |
| P136 | 1 | 286.7 | 20.0 | 4 | 578.0 | 770.5 | 15.0 |
| P137 | 1 | 286.4 | 20.0 | 4 | 578.0 | 770.5 | 15.0 |
| P138 | 1 | 286.0 | 20.0 | 4 | 578.0 | 770.5 | 15.0 |
| P139 | 1 | 285.7 | 20.0 | 4 | 578.0 | 770.5 | 15.0 |
| P140 | 1 | 285.4 | 20.0 | 4 | 578.0 | 770.5 | 15.0 |
| P141 | 1 | 285.0 | 20.0 | 4 | 578.0 | 770.5 | 15.0 |
| P142 | 1 | 284.7 | 20.0 | 4 | 578.0 | 770.5 | 15.0 |
| P143 | 1 | 284.4 | 20.0 | 4 | 578.0 | 770.5 | 15.0 |
| P144 | 1 | 283.9 | 20.0 | 4 | 578.0 | 770.5 | 15.0 |
| P145 | 1 | 283.3 | 20.0 | 4 | 578.0 | 770.5 | 15.0 |
| P146 | 1 | 282.8 | 20.0 | 4 | 578.0 | 770.5 | 15.0 |
| P147 | 1 | 282.3 | 20.0 | 4 | 578.0 | 770.5 | 15.0 |
| P148 | 1 | 281.7 | 20.0 | 4 | 578.0 | 770.5 | 15.0 |
| P149 | 1 | 281.2 | 20.0 | 4 | 578.0 | 770.5 | 15.0 |
| P150 | 1 | 280.7 | 20.0 | 4 | 578.0 | 770.5 | 15.0 |
| P151 | 1 | 280.1 | 20.0 | 4 | 578.0 | 770.5 | 15.0 |
| P152 | 1 | 279.6 | 20.0 | 4 | 578.0 | 770.5 | 15.0 |
| P153 | 1 | 279.0 | 20.0 | 4 | 578.0 | 770.5 | 15.0 |
| P154 | 1 | 278.5 | 20.0 | 4 | 578.0 | 770.5 | 15.0 |
| P155 | 1 | 277.9 | 20.0 | 4 | 578.0 | 770.5 | 15.0 |
| P156 | 1 | 277.4 | 20.0 | 4 | 578.0 | 770.5 | 15.0 |

NOTES:

1. ANCHOR FREE LENGTH IS THE MINIMUM ACCEPTABLE LENGTH.
2. CONTRACTOR SHALL DETERMINE ANCHOR BOND LENGTH REQUIRED TO MEET LOADS LISTED IN ANCHOR SCHEDULE.
3. ALL EXPOSED WALL SURFACES SHALL RECEIVE A CUSTOM FORM LINER FINISH. SEE NOTES AND FORM LINER PATTERNS ON SHEET "RETAINING WALLS ON PROJECT STATE ROUTE 115" FOR INFORMATION REGARDING WALL FINISH.
4. SEE SHEET "RETAINING WALL NO. 7 AND NO. 8 DETAILS" AND SHEET "RETAINING WALL NO. 7 AND NO. 8 ANCHOR WALL NOTES" FOR FURTHER DETAILS PERTAINING TO WALL FACING, ANCHOR INSTALLATION, TESTING, PAYMENT, MATERIAL REQUIREMENTS, AND OTHER REQUIREMENTS FOR ANCHOR WALL CONSTRUCTION AND ACCEPTANCE.

SEALED BY

PRELIMINARY

PLANS

TENNESSEE METRIC D.O.T.

COORDINATES ARE NAD/83(1995), ARE DATUM ADJUSTED BY THE FACTOR OF 1.000 AND TIED TO THE TGRN. ALL ELEVATIONS ARE REFERENCED TO THE NAVD 1988.

STATE OF TENNESSEE
DEPARTMENT OF TRANSPORTATION

# PILE AND ANCHOR SCHEDULES RETAINING WALL NO. 7

SCALE: AS NOTED

9/10/2015
R:_ Infrastructure Project Files\2015 Infra Projects\7681-15-002 ALCOA Hwy (SR 115) WALLS 7 AND 8\06 - CADD\15_RETAINING WALL 7 PILE AND ANCHOR SCHEDULE.sht

| TYPE | YEAR | PROJECT NO. | SHEET NO. |
|---|---|---|---|
| CONST. | 2015 | 47026-3279-14 | 2P8 |

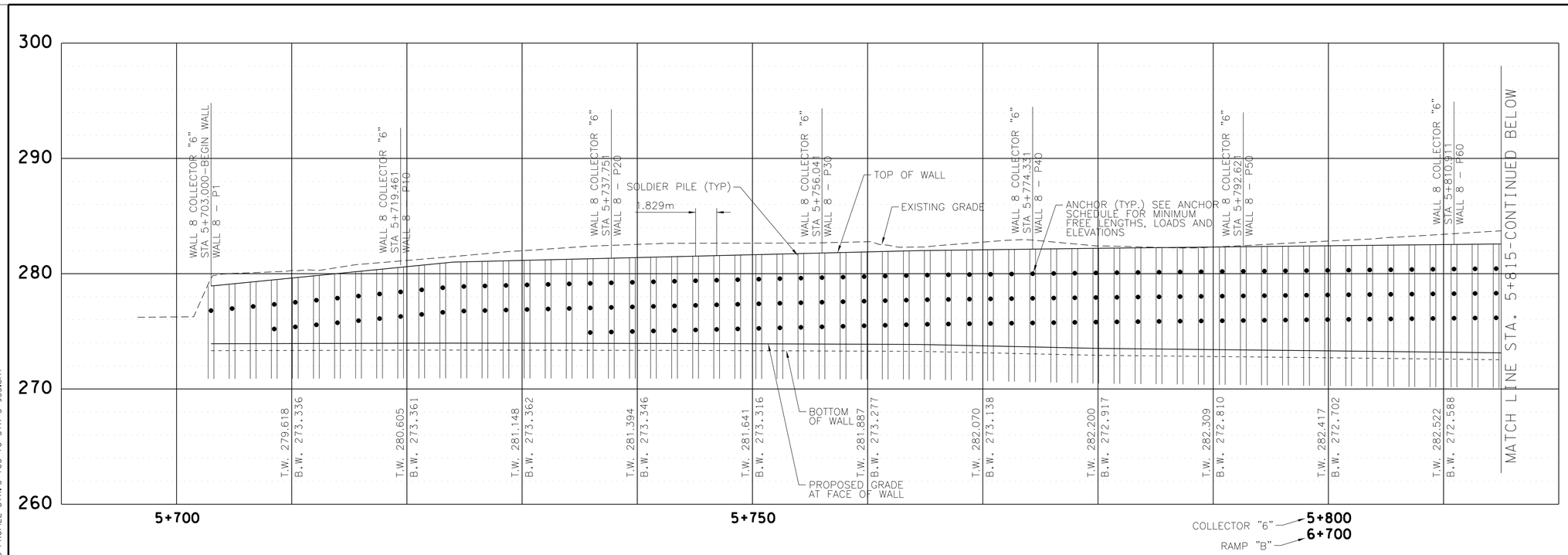


## LEGEND

TW EL 283.390 — TOP OF WALL ELEVATION (EXCLUDES BARRIER WALL)

BW EL 273.400 — BOTTOM OF WALL ELEVATION

PILE AND ANCHORS

LCW8-1 — LOAD CELL (1-TOP ANCHOR, 2-BOTTOM ANCHOR)

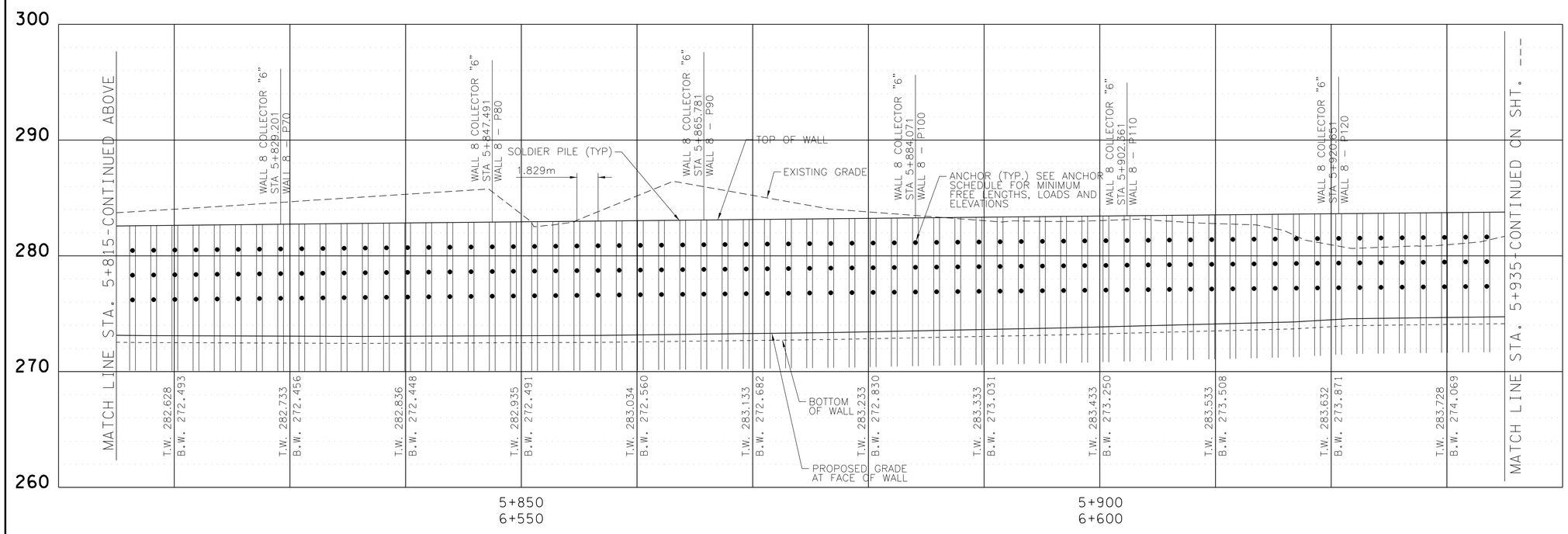


**PRELIMINARY PLANS**

METRIC

COORDINATES ARE NAD/83(1995), ARE DATUM ADJUSTED BY THE FACTOR OF 1.000 AND TIED TO THE TGRN. ALL ELEVATIONS ARE REFERENCED TO THE NAVD 1988.

STATE OF TENNESSEE
DEPARTMENT OF TRANSPORTATION

# PROFILE RETAINING WALL NO. 8

STA.5+703 TO STA.5+935

SCALE: 1:200 HORIZ.
1:200 VERT.

9/10/2015
R:_Infrastructure Project Files\205 Infra Projects\T68I-I5-002 ALCOA Hwy (SR 115)WALLS 7 AND 8\06 - CADD\08.RETAINING WALL NO.8 PROFILE STA.5+703 TO STA 5+935.sht

| TYPE | YEAR | PROJECT NO. | SHEET NO. |
|---|---|---|---|
| CONST. | 2015 | 47026-3279-14 | 2P8 |
| | | | |
| | | | |
| | | | |

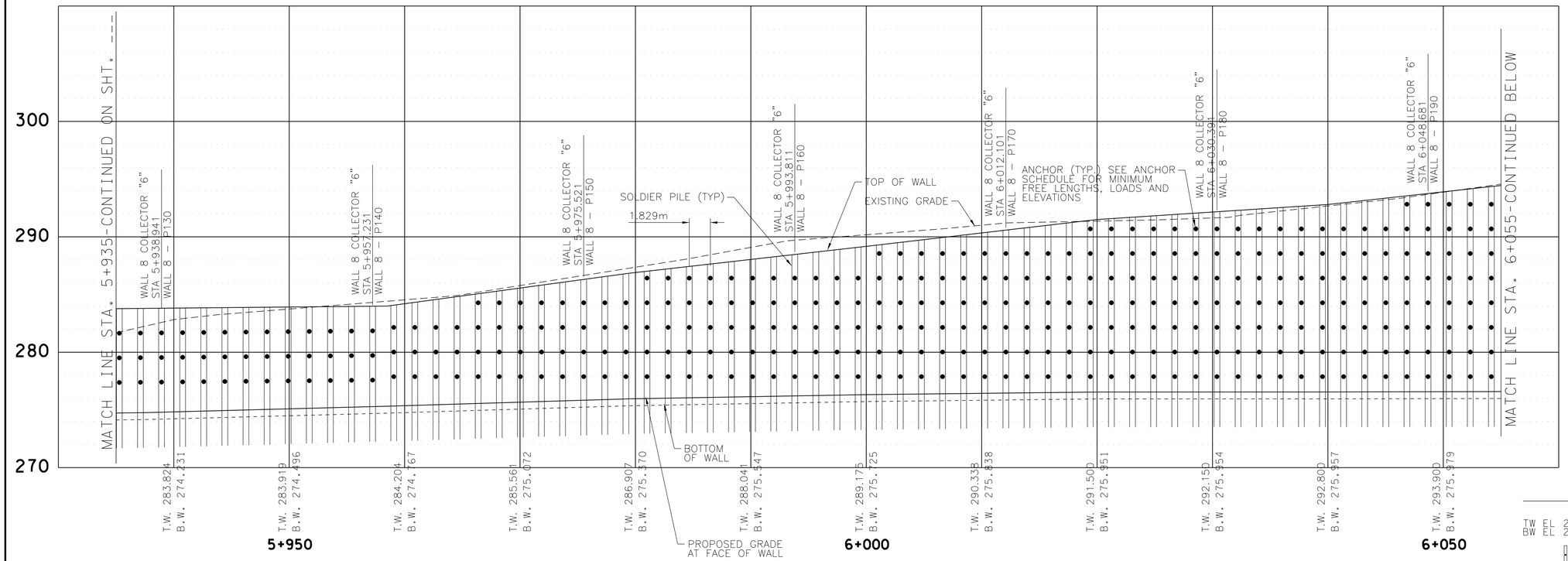


## LEGEND

- TW EL 283.390 — TOP OF WALL ELEVATION (EXCLUDES BARRIER WALL)
- BW EL 273.400 — BOTTOM OF WALL ELEVATION
- PILE AND ANCHORS
- LCW81-1 — LOAD CELL (1-TOP ANCHOR, 2-BOTTOM ANCHOR)
- ? — ESTIMATED TOP OF SOLID ROCK

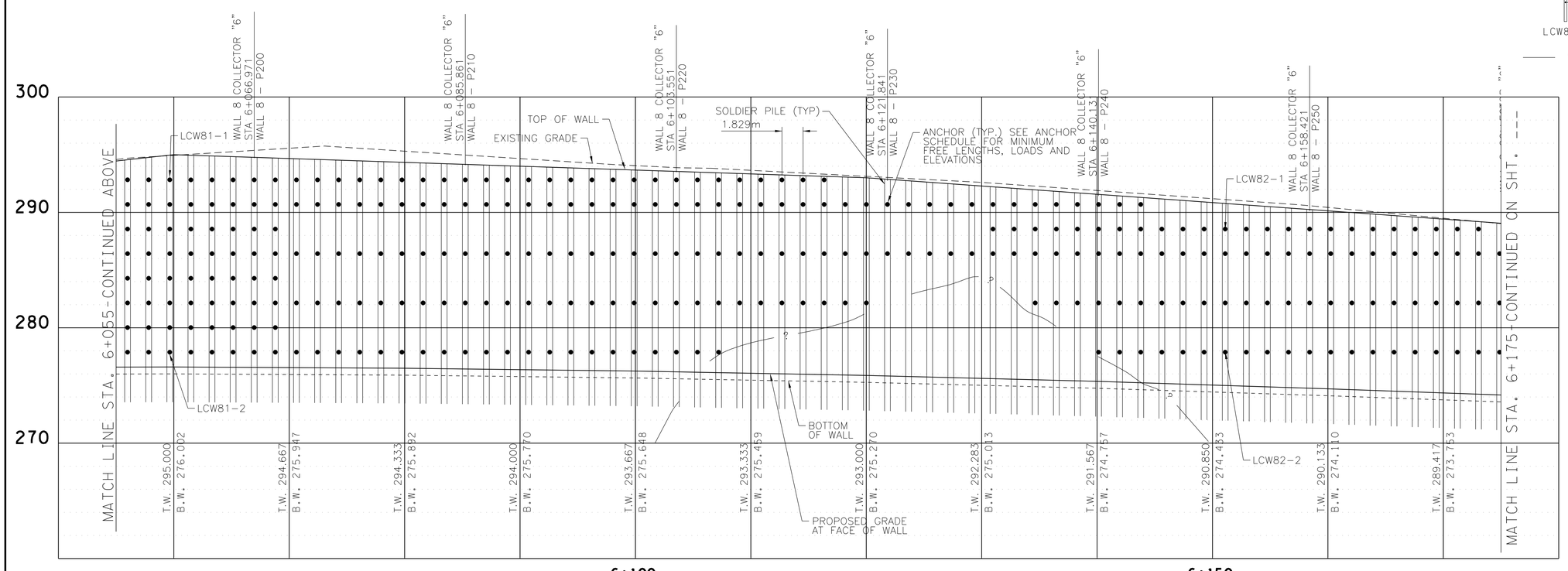


**PRELIMINARY PLANS**

COORDINATES ARE NAD/83(1995), ARE DATUM ADJUSTED BY THE FACTOR OF 1.000 AND TIED TO THE TGRN. ALL ELEVATIONS ARE REFERENCED TO THE NAVD 1988.

STATE OF TENNESSEE
DEPARTMENT OF TRANSPORTATION

# PROFILE RETAINING WALL NO. 8

STA.5+935 TO STA.6+175

SCALE: 1:200 HORIZ.
1:200 VERT.

9/10/2015
R:_Infrastructure Project Files\2015 Infra Projects\768I-15-002 ALCOA Hwy (SR 115) WALLS 7 AND 8\06 - CADD\09_RETAINING WALL NO.8 PROFILE STA.5+935 TO STA 6+175.sht

| TYPE | YEAR | PROJECT NO. | SHEET NO. |
|---|---|---|---|
| CONST. | 2015 | 47026-3279-14 | 2P8 |
| | | | |
| | | | |
| | | | |

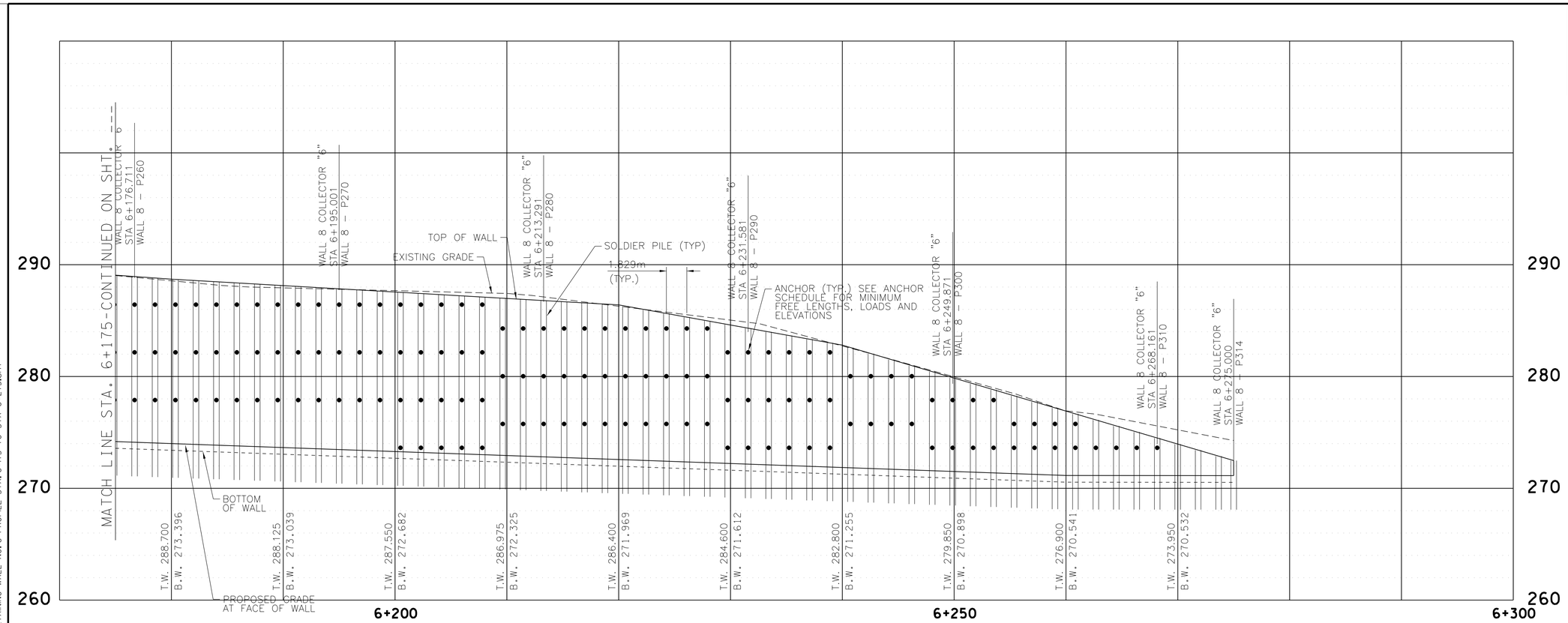


## LEGEND

TW EL 283.390 — TOP OF WALL ELEVATION (EXCLUDES BARRIER WALL)

BW EL 273.400 — BOTTOM OF WALL ELEVATION

PILE AND ANCHORS

LCW8-1 — LOAD CELL (1-TOP ANCHOR, 2-BOTTOM ANCHOR)

**PRELIMINARY**

**PLANS**

METRIC

COORDINATES ARE NAD/83(1995), ARE DATUM ADJUSTED BY THE FACTOR OF 1.000 AND TIED TO THE TGRN. ALL ELEVATIONS ARE REFERENCED TO THE NAVD 1988.

STATE OF TENNESSEE
DEPARTMENT OF TRANSPORTATION

# PROFILE RETAINING WALL NO. 8

STA.6+175 TO STA.6+275

SCALE: 1:200 HORIZ.
1:200 VERT.

9/10/2015
R:_Infrastructure Project Files\2015 Infra Projects\768I-15-002 ALCOA Hwy (SR 115) WALLS 7 AND 8\06 - CADD\10_RETAINING WALL NO.8 PROFILE STA.6+175 TO STA 6+275.sht

| TYPE | YEAR | PROJECT NO. | SHEET NO. |
|---|---|---|---|
| CONST. | 2015 | 47026-3279-14 | 2P8 |
| | | | |
| | | | |
| | | | |

**PILE SCHEDULE FOR: Wall 8**

| Pile # | Pile size (GR345) | Station | Offest (m) | Top Elevation (m) | Bottom of Wall Elevation (m) | Minimum Embedment Depth (m) | Tip Elevation (m) | Total Length (m) |
|---|---|---|---|---|---|---|---|---|
| P1 | HP360x109 | 11+459.27 | -34.35 | 278.93 | 273.31 | 3.05 | 270.26 | 8.67 |
| P2 | HP360x109 | 11+461.08 | -34.35 | 279.11 | 273.31 | 3.05 | 270.27 | 8.84 |
| P3 | HP360x109 | 11+462.88 | -34.35 | 279.29 | 273.32 | 3.05 | 270.27 | 9.02 |
| P4 | HP360x109 | 11+464.68 | -34.35 | 279.47 | 273.32 | 4.57 | 268.75 | 10.72 |
| P5 | HP360x109 | 11+466.49 | -34.35 | 279.65 | 273.33 | 4.57 | 268.76 | 10.89 |
| P6 | HP360x109 | 11+468.29 | -34.35 | 279.83 | 273.33 | 4.57 | 268.76 | 11.07 |
| P7 | HP360x109 | 11+470.09 | -34.35 | 280.01 | 273.34 | 4.57 | 268.76 | 11.25 |
| P8 | HP360x109 | 11+471.89 | -34.35 | 280.19 | 273.34 | 4.57 | 268.77 | 11.42 |
| P9 | HP360x109 | 11+473.70 | -34.35 | 280.37 | 273.35 | 4.57 | 268.77 | 11.60 |
| P10 | HP360x109 | 11+475.50 | -34.35 | 280.55 | 273.35 | 4.57 | 268.78 | 11.77 |
| P11 | HP360x109 | 11+477.30 | -34.35 | 280.73 | 273.35 | 4.57 | 268.78 | 11.95 |
| P12 | HP360x109 | 11+479.11 | -34.35 | 280.91 | 273.36 | 4.57 | 268.79 | 12.13 |
| P13 | HP360x109 | 11+480.91 | -34.35 | 281.02 | 273.36 | 4.57 | 268.79 | 12.24 |
| P14 | HP360x109 | 11+482.71 | -34.35 | 281.07 | 273.36 | 4.57 | 268.79 | 12.28 |
| P15 | HP360x109 | 11+484.51 | -34.35 | 281.11 | 273.35 | 4.57 | 268.78 | 12.33 |
| P16 | HP360x109 | 11+486.32 | -34.35 | 281.16 | 273.35 | 4.57 | 268.78 | 12.38 |
| P17 | HP360x109 | 11+488.12 | -34.35 | 281.20 | 273.35 | 4.57 | 268.78 | 12.43 |
| P18 | HP360x109 | 11+489.92 | -34.35 | 281.25 | 273.35 | 4.57 | 268.77 | 12.48 |
| P19 | HP360x132 | 11+491.73 | -34.35 | 281.29 | 273.34 | 7.62 | 265.72 | 15.57 |
| P20 | HP360x132 | 11+493.53 | -34.35 | 281.34 | 273.34 | 7.62 | 265.72 | 15.62 |
| P21 | HP360x132 | 11+495.33 | -34.35 | 281.38 | 273.34 | 7.62 | 265.72 | 15.67 |
| P22 | HP360x132 | 11+497.13 | -34.35 | 281.43 | 273.33 | 7.62 | 265.71 | 15.72 |
| P23 | HP360x132 | 11+498.94 | -34.35 | 281.47 | 273.33 | 7.62 | 265.71 | 15.76 |
| P24 | HP360x132 | 11+500.74 | -34.35 | 281.52 | 273.33 | 7.62 | 265.71 | 15.81 |
| P25 | HP360x132 | 11+502.54 | -34.35 | 281.56 | 273.32 | 7.62 | 265.70 | 15.87 |
| P26 | HP360x132 | 11+504.35 | -34.35 | 281.61 | 273.31 | 7.62 | 265.69 | 15.92 |
| P27 | HP360x132 | 11+506.15 | -34.35 | 281.65 | 273.30 | 7.62 | 265.68 | 15.97 |
| P28 | HP360x132 | 11+507.95 | -34.35 | 281.70 | 273.30 | 7.62 | 265.68 | 16.02 |
| P29 | HP360x132 | 11+509.75 | -34.35 | 281.74 | 273.29 | 7.62 | 265.67 | 16.07 |
| P30 | HP360x132 | 11+511.56 | -34.35 | 281.79 | 273.28 | 7.62 | 265.66 | 16.13 |
| P31 | HP360x132 | 11+513.36 | -34.35 | 281.83 | 273.28 | 7.62 | 265.66 | 16.18 |
| P32 | HP360x132 | 11+515.16 | -34.35 | 281.88 | 273.27 | 7.62 | 265.65 | 16.23 |
| P33 | HP360x132 | 11+516.97 | -34.35 | 281.92 | 273.26 | 7.62 | 265.64 | 16.28 |
| P34 | HP360x132 | 11+518.77 | -34.35 | 281.97 | 273.25 | 7.62 | 265.63 | 16.34 |
| P35 | HP360x132 | 11+520.57 | -34.35 | 282.01 | 273.24 | 7.62 | 265.62 | 16.39 |
| P36 | HP360x132 | 11+522.38 | -34.35 | 282.03 | 273.19 | 7.62 | 265.57 | 16.46 |
| P37 | HP360x132 | 11+524.18 | -34.35 | 282.06 | 273.15 | 7.62 | 265.53 | 16.52 |
| P38 | HP360x132 | 11+525.98 | -34.35 | 282.08 | 273.11 | 7.62 | 265.49 | 16.59 |
| P39 | HP360x132 | 11+527.78 | -34.35 | 282.10 | 273.07 | 7.62 | 265.45 | 16.65 |
| P40 | HP360x132 | 11+529.59 | -34.35 | 282.13 | 273.03 | 7.62 | 265.41 | 16.71 |
| P41 | HP360x132 | 11+531.39 | -34.35 | 282.15 | 272.99 | 7.62 | 265.37 | 16.78 |
| P42 | HP360x132 | 11+533.19 | -34.35 | 282.17 | 272.95 | 7.62 | 265.33 | 16.84 |
| P43 | HP360x132 | 11+535.00 | -34.36 | 282.20 | 272.91 | 7.62 | 265.29 | 16.91 |
| P44 | HP360x132 | 11+536.80 | -34.39 | 282.22 | 272.89 | 7.62 | 265.27 | 16.95 |
| P45 | HP360x132 | 11+538.60 | -34.43 | 282.24 | 272.87 | 7.62 | 265.25 | 16.99 |
| P46 | HP360x132 | 11+540.40 | -34.50 | 282.26 | 272.85 | 7.62 | 265.23 | 17.03 |
| P47 | HP360x132 | 11+542.20 | -34.58 | 282.28 | 272.83 | 7.62 | 265.21 | 17.07 |
| P48 | HP360x132 | 11+544.00 | -34.68 | 282.30 | 272.81 | 7.62 | 265.19 | 17.11 |
| P49 | HP360x132 | 11+545.80 | -34.80 | 282.32 | 272.79 | 7.62 | 265.17 | 17.15 |
| P50 | HP360x132 | 11+547.60 | -34.93 | 282.34 | 272.77 | 7.62 | 265.15 | 17.18 |
| P51 | HP360x132 | 11+549.39 | -35.09 | 282.36 | 272.75 | 7.62 | 265.13 | 17.22 |
| P52 | HP360x132 | 11+551.19 | -35.26 | 282.38 | 272.73 | 7.62 | 265.11 | 17.26 |
| P53 | HP360x132 | 11+552.98 | -35.45 | 282.40 | 272.71 | 7.62 | 265.09 | 17.30 |
| P54 | HP360x132 | 11+554.77 | -35.65 | 282.42 | 272.69 | 7.62 | 265.07 | 17.34 |
| P55 | HP360x132 | 11+556.56 | -35.88 | 282.44 | 272.67 | 7.62 | 265.05 | 17.38 |
| P56 | HP360x132 | 11+558.35 | -36.12 | 282.45 | 272.65 | 7.62 | 265.03 | 17.42 |
| P57 | HP360x132 | 11+560.13 | -36.38 | 282.47 | 272.63 | 7.62 | 265.01 | 17.46 |
| P58 | HP360x132 | 11+561.91 | -36.65 | 282.49 | 272.61 | 7.62 | 264.99 | 17.50 |
| P59 | HP360x132 | 11+563.69 | -36.95 | 282.51 | 272.59 | 7.62 | 264.97 | 17.54 |
| P60 | HP360x132 | 11+565.46 | -37.26 | 282.53 | 272.57 | 7.62 | 264.95 | 17.58 |
| P61 | HP360x132 | 11+567.23 | -37.59 | 282.55 | 272.55 | 7.62 | 264.93 | 17.62 |
| P62 | HP360x132 | 11+569.00 | -37.93 | 282.57 | 272.53 | 7.62 | 264.91 | 17.66 |
| P63 | HP360x132 | 11+570.77 | -38.30 | 282.59 | 272.50 | 7.62 | 264.88 | 17.71 |
| P64 | HP360x132 | 11+572.53 | -38.68 | 282.61 | 272.49 | 7.62 | 264.87 | 17.74 |
| P65 | HP360x132 | 11+574.28 | -39.07 | 282.63 | 272.48 | 7.62 | 264.86 | 17.76 |
| P66 | HP360x132 | 11+576.04 | -39.49 | 282.65 | 272.48 | 7.62 | 264.86 | 17.79 |
| P67 | HP360x132 | 11+577.78 | -39.92 | 282.67 | 272.47 | 7.62 | 264.85 | 17.82 |
| P68 | HP360x132 | 11+579.54 | -40.37 | 282.69 | 272.46 | 7.62 | 264.84 | 17.84 |
| P69 | HP360x132 | 11+581.31 | -40.84 | 282.71 | 272.46 | 7.62 | 264.84 | 17.87 |
| P70 | HP360x132 | 11+583.07 | -41.32 | 282.72 | 272.45 | 7.62 | 264.83 | 17.90 |
| P71 | HP360x132 | 11+584.83 | -41.81 | 282.74 | 272.44 | 7.62 | 264.82 | 17.92 |
| P72 | HP360x132 | 11+586.59 | -42.30 | 282.76 | 272.44 | 7.62 | 264.82 | 17.95 |
| P73 | HP360x132 | 11+588.35 | -42.80 | 282.78 | 272.43 | 7.62 | 264.81 | 17.97 |
| P74 | HP360x132 | 11+590.11 | -43.29 | 282.80 | 272.42 | 7.62 | 264.80 | 18.00 |
| P75 | HP360x132 | 11+591.87 | -43.79 | 282.82 | 272.43 | 7.62 | 264.81 | 18.01 |
| P76 | HP360x132 | 11+593.63 | -44.28 | 282.84 | 272.44 | 7.62 | 264.82 | 18.02 |
| P77 | HP360x132 | 11+595.39 | -44.78 | 282.86 | 272.45 | 7.62 | 264.83 | 18.03 |
| P78 | HP360x132 | 11+597.15 | -45.27 | 282.87 | 272.45 | 7.62 | 264.83 | 18.04 |
| P79 | HP360x132 | 11+598.91 | -45.76 | 282.89 | 272.46 | 7.62 | 264.84 | 18.05 |
| P80 | HP360x132 | 11+600.67 | -46.26 | 282.91 | 272.47 | 7.62 | 264.85 | 18.06 |
| P81 | HP360x132 | 11+602.43 | -46.75 | 282.93 | 272.48 | 7.62 | 264.86 | 18.07 |
| P82 | HP360x132 | 11+604.19 | -47.25 | 282.95 | 272.49 | 7.62 | 264.87 | 18.08 |
| P83 | HP360x132 | 11+605.95 | -47.74 | 282.96 | 272.49 | 7.62 | 264.87 | 18.09 |
| P84 | HP360x132 | 11+607.71 | -48.23 | 282.98 | 272.50 | 7.62 | 264.88 | 18.10 |
| P85 | HP360x132 | 11+609.47 | -48.73 | 283.00 | 272.51 | 7.62 | 264.89 | 18.11 |
| P86 | HP360x132 | 11+611.23 | -49.22 | 283.02 | 272.53 | 7.62 | 264.91 | 18.11 |
| P87 | HP360x132 | 11+612.99 | -49.72 | 283.04 | 272.55 | 7.62 | 264.93 | 18.10 |
| P88 | HP360x132 | 11+614.75 | -50.21 | 283.05 | 272.58 | 7.62 | 264.96 | 18.10 |
| P89 | HP360x132 | 11+616.51 | -50.70 | 283.07 | 272.60 | 7.62 | 264.98 | 18.09 |
| P90 | HP360x132 | 11+618.27 | -51.20 | 283.09 | 272.62 | 7.62 | 265.00 | 18.09 |
| P91 | HP360x132 | 11+620.03 | -51.69 | 283.11 | 272.64 | 7.62 | 265.02 | 18.09 |
| P92 | HP360x132 | 11+621.79 | -52.19 | 283.13 | 272.67 | 7.62 | 265.05 | 18.08 |
| P93 | HP360x132 | 11+623.54 | -52.68 | 283.15 | 272.69 | 7.62 | 265.07 | 18.08 |
| P94 | HP360x132 | 11+625.30 | -53.18 | 283.16 | 272.71 | 7.62 | 265.09 | 18.07 |
| P95 | HP360x132 | 11+627.06 | -53.67 | 283.18 | 272.73 | 7.62 | 265.11 | 18.07 |
| P96 | HP360x132 | 11+628.82 | -54.16 | 283.20 | 272.76 | 7.62 | 265.14 | 18.07 |
| P97 | HP360x132 | 11+630.58 | -54.66 | 283.22 | 272.79 | 7.62 | 265.17 | 18.05 |
| P98 | HP360x132 | 11+632.34 | -55.15 | 283.24 | 272.83 | 7.62 | 265.21 | 18.03 |
| P99 | HP360x132 | 11+634.10 | -55.65 | 283.26 | 272.87 | 7.62 | 265.25 | 18.01 |
| P100 | HP360x132 | 11+635.86 | -56.14 | 283.27 | 272.90 | 7.62 | 265.28 | 17.99 |
| P101 | HP360x132 | 11+637.62 | -56.63 | 283.29 | 272.94 | 7.62 | 265.32 | 17.97 |
| P102 | HP360x132 | 11+639.38 | -57.13 | 283.31 | 272.98 | 7.62 | 265.36 | 17.95 |
| P103 | HP360x132 | 11+641.14 | -57.62 | 283.33 | 273.01 | 7.62 | 265.39 | 17.94 |
| P104 | HP360x132 | 11+642.90 | -58.12 | 283.35 | 273.05 | 7.62 | 265.43 | 17.92 |
| P105 | HP360x132 | 11+644.66 | -58.61 | 283.36 | 273.09 | 7.62 | 265.47 | 17.90 |
| P106 | HP360x132 | 11+646.42 | -59.11 | 283.38 | 273.12 | 7.62 | 265.50 | 17.88 |
| P107 | HP360x132 | 11+648.18 | -59.60 | 283.40 | 273.16 | 7.62 | 265.54 | 17.86 |
| P108 | HP360x132 | 11+649.94 | -60.09 | 283.42 | 273.21 | 7.62 | 265.59 | 17.83 |
| P109 | HP360x132 | 11+651.70 | -60.59 | 283.44 | 273.25 | 7.62 | 265.63 | 17.80 |
| P110 | HP360x132 | 11+653.46 | -61.08 | 283.46 | 273.30 | 7.62 | 265.68 | 17.77 |
| P111 | HP360x132 | 11+655.22 | -61.58 | 283.47 | 273.35 | 7.62 | 265.73 | 17.75 |
| P112 | HP360x132 | 11+656.98 | -62.07 | 283.49 | 273.40 | 7.62 | 265.78 | 17.72 |
| P113 | HP360x132 | 11+658.74 | -62.56 | 283.51 | 273.44 | 7.62 | 265.82 | 17.69 |
| P114 | HP360x132 | 11+660.50 | -63.06 | 283.53 | 273.49 | 7.62 | 265.87 | 17.66 |
| P115 | HP360x132 | 11+662.26 | -63.55 | 283.55 | 273.54 | 7.62 | 265.92 | 17.63 |
| P116 | HP360x132 | 11+664.01 | -64.05 | 283.57 | 273.58 | 7.62 | 265.96 | 17.60 |
| P117 | HP360x132 | 11+665.77 | -64.54 | 283.58 | 273.63 | 7.62 | 266.01 | 17.57 |
| P118 | HP360x132 | 11+667.53 | -65.04 | 283.60 | 273.69 | 7.62 | 266.07 | 17.54 |
| P119 | HP360x132 | 11+669.29 | -65.53 | 283.62 | 273.79 | 7.62 | 266.17 | 17.45 |
| P120 | HP360x132 | 11+671.05 | -66.02 | 283.64 | 273.90 | 7.62 | 266.28 | 17.36 |
| P121 | HP360x132 | 11+672.81 | -66.52 | 283.66 | 273.96 | 7.62 | 266.34 | 17.31 |
| P122 | HP360x132 | 11+674.58 | -66.99 | 283.67 | 273.99 | 7.62 | 266.37 | 17.31 |
| P123 | HP360x132 | 11+676.34 | -67.46 | 283.69 | 274.01 | 7.62 | 266.39 | 17.30 |
| P124 | HP360x132 | 11+678.12 | -67.91 | 283.71 | 274.03 | 7.62 | 266.41 | 17.30 |
| P125 | HP360x132 | 11+679.89 | -68.35 | 283.73 | 274.06 | 7.62 | 266.44 | 17.29 |
| P126 | HP360x132 | 11+681.67 | -68.77 | 283.74 | 274.08 | 7.62 | 266.46 | 17.28 |
| P127 | HP360x132 | 11+683.45 | -69.18 | 283.76 | 274.10 | 7.62 | 266.48 | 17.28 |
| P128 | HP360x132 | 11+685.24 | -69.57 | 283.78 | 274.13 | 7.62 | 266.51 | 17.27 |
| P129 | HP360x132 | 11+687.02 | -69.95 | 283.80 | 274.15 | 7.62 | 266.53 | 17.27 |
| P130 | HP360x132 | 11+688.81 | -70.31 | 283.81 | 274.19 | 7.62 | 266.57 | 17.24 |
| P131 | HP360x132 | 11+690.61 | -70.66 | 283.83 | 274.24 | 7.62 | 266.62 | 17.21 |
| P132 | HP360x132 | 11+692.40 | -71.00 | 283.85 | 274.29 | 7.62 | 266.67 | 17.18 |

**PILE SCHEDULE FOR: Wall 8 (CONTINUED)**

| Pile # | Pile size (GR345) | Station | Offest (m) | Top Elevation (m) | Bottom of Wall Elevation (m) | Minimum Embedment Depth (m) | Tip Elevation (m) | Total Length (m) |
|---|---|---|---|---|---|---|---|---|
| P133 | HP360x132 | 11+694.20 | -71.32 | 283.87 | 274.34 | 7.62 | 266.72 | 17.15 |
| P134 | HP360x132 | 11+696.01 | -71.62 | 283.88 | 274.39 | 7.62 | 266.77 | 17.12 |
| P135 | HP360x132 | 11+697.81 | -71.91 | 283.90 | 274.44 | 7.62 | 266.82 | 17.09 |
| P136 | HP360x132 | 11+699.62 | -72.19 | 283.92 | 274.48 | 7.62 | 266.86 | 17.05 |
| P137 | HP360x132 | 11+701.43 | -72.45 | 283.94 | 274.53 | 7.62 | 266.91 | 17.02 |
| P138 | HP360x132 | 11+703.24 | -72.70 | 283.95 | 274.58 | 7.62 | 266.96 | 16.99 |
| P139 | HP360x132 | 11+705.05 | -72.94 | 283.97 | 274.63 | 7.62 | 267.01 | 16.96 |
| P140 | HP360x132 | 11+706.86 | -73.15 | 283.99 | 274.68 | 7.62 | 267.06 | 16.93 |
| P141 | HP360x132 | 11+708.68 | -73.36 | 284.08 | 274.73 | 7.62 | 267.11 | 16.97 |
| P142 | HP360x132 | 11+710.50 | -73.55 | 284.32 | 274.78 | 7.62 | 267.16 | 17.16 |
| P143 | HP360x132 | 11+712.32 | -73.72 | 284.57 | 274.84 | 7.62 | 267.22 | 17.35 |
| P144 | HP360x132 | 11+714.14 | -73.88 | 284.82 | 274.90 | 7.62 | 267.28 | 17.55 |
| P145 | HP360x132 | 11+715.96 | -74.03 | 285.07 | 274.95 | 12.19 | 262.76 | 22.31 |
| P146 | HP360x132 | 11+717.78 | -74.16 | 285.32 | 275.01 | 12.19 | 262.82 | 22.50 |
| P147 | HP360x132 | 11+719.61 | -74.27 | 285.57 | 275.06 | 12.19 | 262.87 | 22.69 |
| P148 | HP360x132 | 11+721.43 | -74.37 | 285.81 | 275.12 | 12.19 | 262.93 | 22.89 |
| P149 | HP360x132 | 11+723.26 | -74.46 | 286.06 | 275.17 | 12.19 | 262.98 | 23.08 |
| P150 | HP360x132 | 11+725.08 | -74.53 | 286.31 | 275.23 | 12.19 | 263.04 | 23.27 |
| P151 | HP360x132 | 11+726.91 | -74.59 | 286.56 | 275.29 | 12.19 | 263.09 | 23.46 |
| P152 | HP360x132 | 11+728.74 | -74.63 | 286.81 | 275.34 | 12.19 | 263.15 | 23.66 |
| P153 | HP360x152 | 11+730.56 | -74.66 | 287.02 | 275.38 | 17.07 | 258.31 | 28.71 |
| P154 | HP360x152 | 11+732.39 | -74.67 | 287.23 | 275.41 | 17.07 | 258.34 | 28.89 |
| P155 | HP360x152 | 11+734.22 | -74.67 | 287.44 | 275.44 | 17.07 | 258.37 | 29.06 |
| P156 | HP360x152 | 11+736.05 | -74.65 | 287.64 | 275.48 | 17.07 | 258.41 | 29.24 |
| P157 | HP360x152 | 11+737.87 | -74.62 | 287.85 | 275.51 | 17.07 | 258.44 | 29.41 |
| P158 | HP360x152 | 11+739.70 | -74.57 | 288.06 | 275.54 | 17.07 | 258.47 | 29.59 |
| P159 | HP360x152 | 11+741.51 | -74.52 | 288.27 | 275.57 | 17.07 | 258.50 | 29.76 |
| P160 | HP360x152 | 11+743.34 | -74.46 | 288.47 | 275.61 | 17.07 | 258.54 | 29.94 |
| P161 | HP360x152 | 11+745.17 | -74.41 | 288.68 | 275.64 | 17.07 | 258.57 | 30.11 |
| P162 | HP360x152 | 11+746.99 | -74.35 | 288.89 | 275.67 | 17.07 | 258.60 | 30.29 |
| P163 | HP360x152 | 11+748.82 | -74.30 | 289.10 | 275.70 | 17.07 | 258.63 | 30.46 |
| P164 | HP360x152 | 6+001.13 | -14.57 | 289.31 | 275.73 | 17.07 | 258.66 | 30.65 |
| P165 | HP360x152 | 6+002.96 | -14.57 | 289.52 | 275.75 | 17.07 | 258.68 | 30.84 |
| P166 | HP360x152 | 6+004.79 | -14.57 | 289.73 | 275.77 | 17.07 | 258.70 | 31.03 |
| P167 | HP360x152 | 6+006.61 | -14.57 | 289.94 | 275.79 | 17.07 | 258.72 | 31.22 |
| P168 | HP360x152 | 6+008.44 | -14.57 | 290.16 | 275.81 | 17.07 | 258.74 | 31.41 |
| P169 | HP360x152 | 6+010.27 | -14.57 | 290.37 | 275.83 | 17.07 | 258.76 | 31.61 |
| P170 | HP360x152 | 6+012.10 | -14.57 | 290.58 | 275.85 | 17.07 | 258.78 | 31.80 |
| P171 | HP360x152 | 6+013.93 | -14.57 | 290.79 | 275.87 | 17.07 | 258.80 | 31.99 |
| P172 | HP360x152 | 6+015.76 | -14.57 | 291.01 | 275.89 | 17.07 | 258.82 | 32.18 |
| P173 | HP360x152 | 6+017.59 | -14.57 | 291.22 | 275.91 | 17.07 | 258.85 | 32.37 |
| P174 | HP360x174 | 6+019.42 | -14.57 | 291.43 | 275.93 | 18.29 | 257.65 | 33.79 |
| P175 | HP360x174 | 6+021.25 | -14.57 | 291.58 | 275.94 | 18.29 | 257.65 | 33.93 |
| P176 | HP360x174 | 6+023.08 | -14.57 | 291.70 | 275.94 | 18.29 | 257.65 | 34.05 |
| P177 | HP360x174 | 6+024.90 | -14.57 | 291.82 | 275.94 | 18.29 | 257.65 | 34.16 |
| P178 | HP360x174 | 6+026.73 | -14.57 | 291.94 | 275.94 | 18.29 | 257.66 | 34.28 |
| P179 | HP360x174 | 6+028.56 | -14.57 | 292.06 | 275.94 | 18.29 | 257.66 | 34.40 |
| P180 | HP360x174 | 6+030.39 | -14.57 | 292.18 | 275.94 | 18.29 | 257.66 | 34.52 |
| P181 | HP360x174 | 6+032.22 | -14.57 | 292.29 | 275.95 | 18.29 | 257.66 | 34.64 |
| P182 | HP360x174 | 6+034.05 | -14.57 | 292.41 | 275.95 | 18.29 | 257.66 | 34.76 |
| P183 | HP360x174 | 6+035.88 | -14.57 | 292.53 | 275.95 | 18.29 | 257.66 | 34.87 |
| P184 | HP360x174 | 6+037.71 | -14.57 | 292.65 | 275.95 | 18.29 | 257.66 | 34.99 |
| P185 | HP360x174 | 6+039.54 | -14.57 | 292.77 | 275.95 | 18.29 | 257.66 | 35.11 |
| P186 | HP360x174 | 6+041.37 | -14.57 | 292.95 | 275.95 | 18.29 | 257.66 | 35.29 |
| P187 | HP360x174 | 6+043.19 | -14.57 | 293.15 | 275.95 | 18.29 | 257.67 | 35.48 |
| P188 | HP360x174 | 6+045.02 | -14.57 | 293.35 | 275.96 | 18.29 | 257.67 | 35.68 |
| P189 | HP360x174 | 6+046.85 | -14.57 | 293.55 | 275.96 | 18.29 | 257.67 | 35.88 |
| P190 | HP360x174 | 6+048.68 | -14.57 | 293.75 | 275.97 | 18.29 | 257.68 | 36.08 |
| P191 | HP360x174 | 6+050.51 | -14.57 | 293.96 | 275.97 | 18.29 | 257.68 | 36.27 |
| P192 | HP360x174 | 6+052.34 | -14.57 | 294.16 | 275.98 | 18.29 | 257.69 | 36.47 |
| P193 | HP360x174 | 6+054.17 | -14.57 | 294.36 | 275.98 | 18.29 | 257.69 | 36.67 |
| P194 | HP360x174 | 6+056.00 | -14.57 | 294.56 | 275.98 | 18.29 | 257.69 | 36.87 |
| P195 | HP360x174 | 6+057.83 | -14.57 | 294.76 | 275.99 | 18.29 | 257.70 | 37.06 |
| P196 | HP360x174 | 6+059.66 | -14.57 | 294.96 | 275.99 | 2.20 | 273.79 | 21.17 |
| P197 | HP360x174 | 6+061.48 | -14.57 | 294.95 | 275.98 | 2.20 | 273.78 | 21.17 |
| P198 | HP360x174 | 6+063.31 | -14.57 | 294.89 | 275.97 | 2.20 | 273.77 | 21.12 |
| P199 | HP360x174 | 6+065.14 | -14.57 | 294.83 | 275.96 | 2.20 | 273.76 | 21.06 |
| P200 | HP360x174 | 6+066.97 | -14.57 | 294.77 | 275.95 | 2.20 | 273.75 | 21.01 |
| P201 | HP360x132 | 6+068.80 | -14.57 | 294.71 | 275.94 | 2.20 | 273.74 | 20.96 |
| P202 | HP360x132 | 6+070.63 | -14.57 | 294.65 | 275.93 | 2.20 | 273.73 | 20.91 |
| P203 | HP360x132 | 6+072.46 | -14.57 | 294.58 | 275.92 | 2.20 | 273.72 | 20.86 |
| P204 | HP360x132 | 6+074.29 | -14.57 | 294.52 | 275.91 | 2.20 | 273.71 | 20.81 |
| P205 | HP360x132 | 6+076.12 | -14.57 | 294.46 | 275.90 | 2.20 | 273.70 | 20.76 |
| P206 | HP360x132 | 6+077.95 | -14.57 | 294.40 | 275.89 | 2.20 | 273.69 | 20.71 |
| P207 | HP360x132 | 6+079.77 | -14.57 | 294.34 | 275.88 | 2.20 | 273.68 | 20.66 |
| P208 | HP360x132 | 6+081.60 | -14.57 | 294.28 | 275.86 | 2.20 | 273.66 | 20.62 |
| P209 | HP360x132 | 6+083.43 | -14.57 | 294.22 | 275.84 | 2.20 | 273.64 | 20.58 |
| P210 | HP360x132 | 6+085.26 | -14.57 | 294.16 | 275.82 | 2.20 | 273.62 | 20.54 |
| P211 | HP360x132 | 6+087.09 | -14.57 | 294.10 | 275.80 | 2.20 | 273.60 | 20.50 |
| P212 | HP360x132 | 6+088.92 | -14.57 | 294.04 | 275.77 | 2.20 | 273.57 | 20.46 |
| P213 | HP360x132 | 6+090.75 | -14.57 | 293.98 | 275.75 | 2.20 | 273.55 | 20.42 |
| P214 | HP360x132 | 6+092.58 | -14.57 | 293.91 | 275.73 | 2.20 | 273.53 | 20.39 |
| P215 | HP360x132 | 6+094.41 | -14.57 | 293.85 | 275.71 | 2.20 | 273.51 | 20.35 |
| P216 | HP360x132 | 6+096.24 | -14.57 | 293.79 | 275.68 | 2.20 | 273.48 | 20.31 |
| P217 | HP360x132 | 6+098.06 | -14.57 | 293.73 | 275.66 | 2.20 | 273.46 | 20.27 |
| P218 | HP360x132 | 6+099.89 | -14.57 | 293.67 | 275.64 | 2.20 | 273.44 | 20.23 |
| P219 | HP360x132 | 6+101.72 | -14.57 | 293.61 | 275.61 | 2.20 | 273.41 | 20.20 |
| P220 | HP360x132 | 6+103.55 | -14.57 | 293.55 | 275.57 | 2.20 | 273.37 | 20.18 |
| P221 | HP360x132 | 6+105.38 | -14.57 | 293.49 | 275.54 | 1.52 | 274.01 | 19.47 |
| P222 | HP360x132 | 6+107.21 | -14.57 | 293.43 | 275.50 | 1.52 | 273.98 | 19.45 |
| P223 | HP360x132 | 6+109.04 | -14.57 | 293.37 | 275.47 | 1.52 | 273.94 | 19.42 |
| P224 | HP360x132 | 6+110.87 | -14.57 | 293.30 | 275.43 | 1.52 | 273.91 | 19.40 |
| P225 | HP360x132 | 6+112.70 | -14.57 | 293.24 | 275.40 | 1.52 | 273.87 | 19.37 |
| P226 | HP360x132 | 6+114.53 | -14.57 | 293.18 | 275.36 | 1.52 | 273.84 | 19.34 |
| P227 | HP360x132 | 6+116.35 | -14.57 | 293.12 | 275.33 | 1.52 | 273.81 | 19.32 |
| P228 | HP360x132 | 6+118.18 | -14.57 | 293.06 | 275.29 | 1.52 | 273.77 | 19.29 |
| P229 | HP360x132 | 6+120.01 | -14.57 | 293.00 | 275.26 | 1.52 | 273.74 | 19.26 |
| P230 | HP360x132 | 6+121.84 | -14.57 | 292.87 | 275.21 | 1.52 | 273.69 | 19.18 |
| P231 | HP360x132 | 6+123.67 | -14.57 | 292.74 | 275.17 | 1.52 | 273.64 | 19.09 |
| P232 | HP360x132 | 6+125.50 | -14.57 | 292.61 | 275.12 | 1.52 | 273.60 | 19.01 |
| P233 | HP360x132 | 6+127.33 | -14.57 | 292.47 | 275.07 | 1.52 | 273.55 | 18.93 |
| P234 | HP360x132 | 6+129.16 | -14.57 | 292.34 | 275.03 | 1.52 | 273.50 | 18.84 |
| P235 | HP360x132 | 6+130.99 | -14.57 | 292.21 | 274.98 | 1.52 | 273.45 | 18.76 |
| P236 | HP360x132 | 6+132.82 | -14.57 | 292.08 | 274.93 | 1.52 | 273.41 | 18.67 |
| P237 | HP360x132 | 6+134.64 | -14.57 | 291.95 | 274.88 | 1.52 | 273.36 | 18.59 |
| P238 | HP360x132 | 6+136.47 | -14.57 | 291.82 | 274.84 | 1.52 | 273.31 | 18.51 |
| P239 | HP360x132 | 6+138.30 | -14.57 | 291.69 | 274.79 | 1.52 | 273.27 | 18.42 |
| P240 | HP360x132 | 6+140.13 | -14.57 | 291.56 | 274.74 | 1.52 | 273.22 | 18.34 |
| P241 | HP360x132 | 6+141.96 | -14.57 | 291.43 | 274.68 | 1.52 | 273.16 | 18.27 |
| P242 | HP360x132 | 6+143.79 | -14.57 | 291.30 | 274.62 | 1.52 | 273.10 | 18.19 |
| P243 | HP360x132 | 6+145.62 | -14.57 | 291.16 | 274.57 | 1.52 | 273.04 | 18.12 |
| P244 | HP360x132 | 6+147.45 | -14.57 | 291.03 | 274.51 | 2.20 | 272.31 | 18.73 |
| P245 | HP360x132 | 6+149.28 | -14.57 | 290.90 | 274.45 | 2.20 | 272.25 | 18.65 |
| P246 | HP360x109 | 6+151.11 | -14.57 | 290.77 | 274.39 | 2.20 | 272.19 | 18.58 |
| P247 | HP360x109 | 6+152.93 | -14.57 | 290.64 | 274.33 | 2.20 | 272.13 | 18.51 |
| P248 | HP360x109 | 6+154.76 | -14.57 | 290.51 | 274.27 | 2.20 | 272.07 | 18.44 |
| P249 | HP360x109 | 6+156.59 | -14.57 | 290.38 | 274.21 | 2.20 | 272.01 | 18.37 |
| P250 | HP360x109 | 6+158.42 | -14.57 | 290.25 | 274.15 | 2.20 | 271.95 | 18.30 |
| P251 | HP360x109 | 6+160.25 | -14.57 | 290.12 | 274.09 | 2.20 | 271.89 | 18.22 |
| P252 | HP360x109 | 6+162.08 | -14.57 | 289.98 | 274.03 | 2.20 | 271.83 | 18.16 |
| P253 | HP360x109 | 6+163.91 | -14.57 | 289.85 | 273.96 | 2.20 | 271.76 | 18.09 |
| P254 | HP360x109 | 6+165.74 | -14.57 | 289.72 | 273.90 | 2.20 | 271.70 | 18.03 |
| P255 | HP360x109 | 6+167.57 | -14.57 | 289.59 | 273.83 | 2.20 | 271.63 | 17.96 |
| P256 | HP360x109 | 6+169.40 | -14.57 | 289.46 | 273.77 | 2.20 | 271.57 | 17.90 |
| P257 | HP360x109 | 6+171.22 | -14.57 | 289.33 | 273.70 | 2.20 | 271.50 | 17.83 |
| P258 | HP360x109 | 6+173.05 | -14.57 | 289.20 | 273.63 | 2.20 | 271.43 | 17.76 |
| P259 | HP360x109 | 6+174.88 | -14.57 | 289.07 | 273.57 | 2.20 | 271.37 | 17.70 |
| P260 | HP360x109 | 6+176.71 | -14.57 | 288.94 | 273.50 | 2.20 | 271.30 | 17.63 |
| P261 | HP360x109 | 6+178.54 | -14.57 | 288.80 | 273.44 | 2.20 | 271.24 | 17.57 |
| P262 | HP360x109 | 6+180.37 | -14.57 | 288.68 | 273.37 | 2.20 | 271.17 | 17.51 |
| P263 | HP360x109 | 6+182.20 | -14.57 | 288.57 | 273.31 | 2.20 | 271.11 | 17.47 |
| P264 | HP360x109 | 6+184.03 | -14.57 | 288.47 | 273.24 | 2.20 | 271.04 | 17.43 |

**PILE SCHEDULE FOR: Wall 8 (CONTINUED)**

| Pile # | Pile size (GR345) | Station | Offest (m) | Top Elevation (m) | Bottom of Wall Elevation (m) | Minimum Embedment Depth (m) | Tip Elevation (m) | Total Length (m) |
|---|---|---|---|---|---|---|---|---|
| P265 | HP360x109 | 6+185.86 | -14.57 | 288.36 | 273.18 | 2.20 | 270.98 | 17.39 |
| P266 | HP360x109 | 6+187.69 | -14.57 | 288.26 | 273.11 | 2.20 | 270.91 | 17.35 |
| P267 | HP360x109 | 6+189.51 | -14.57 | 288.15 | 273.05 | 2.20 | 270.85 | 17.31 |
| P268 | HP360x109 | 6+191.34 | -14.57 | 288.05 | 272.98 | 2.20 | 270.78 | 17.27 |
| P269 | HP360x109 | 6+193.17 | -14.57 | 287.94 | 272.92 | 2.20 | 270.72 | 17.23 |
| P270 | HP360x109 | 6+195.00 | -14.57 | 287.84 | 272.85 | 2.20 | 270.65 | 17.19 |
| P271 | HP360x109 | 6+196.83 | -14.57 | 287.73 | 272.79 | 2.20 | 270.59 | 17.15 |
| P272 | HP360x109 | 6+198.66 | -14.57 | 287.63 | 272.72 | 2.20 | 270.52 | 17.11 |
| P273 | HP360x109 | 6+200.49 | -14.57 | 287.52 | 272.66 | 2.20 | 270.46 | 17.07 |
| P274 | HP360x109 | 6+202.32 | -14.57 | 287.42 | 272.59 | 2.20 | 270.39 | 17.03 |
| P275 | HP360x109 | 6+204.15 | -14.57 | 287.31 | 272.52 | 2.20 | 270.32 | 16.99 |
| P276 | HP360x109 | 6+205.98 | -14.57 | 287.21 | 272.46 | 2.20 | 270.26 | 16.95 |
| P277 | HP360x109 | 6+207.80 | -14.57 | 287.10 | 272.39 | 2.20 | 270.19 | 16.91 |
| P278 | HP360x109 | 6+209.63 | -14.57 | 287.00 | 272.33 | 2.20 | 270.13 | 16.87 |
| P279 | HP360x109 | 6+211.46 | -14.57 | 286.89 | 272.26 | 2.20 | 270.06 | 16.83 |
| P280 | HP360x109 | 6+213.29 | -14.57 | 286.79 | 272.20 | 2.20 | 270.00 | 16.79 |
| P281 | HP360x109 | 6+215.12 | -14.57 | 286.68 | 272.13 | 2.20 | 269.93 | 16.75 |
| P282 | HP360x109 | 6+216.95 | -14.57 | 286.58 | 272.07 | 2.20 | 269.87 | 16.71 |
| P283 | HP360x109 | 6+218.78 | -14.57 | 286.47 | 272.00 | 2.20 | 269.80 | 16.67 |
| P284 | HP360x109 | 6+220.61 | -14.57 | 286.29 | 271.94 | 2.20 | 269.74 | 16.55 |
| P285 | HP360x109 | 6+222.44 | -14.57 | 285.96 | 271.87 | 2.20 | 269.67 | 16.29 |
| P286 | HP360x109 | 6+224.27 | -14.57 | 285.63 | 271.81 | 2.20 | 269.61 | 16.03 |
| P287 | HP360x109 | 6+226.09 | -14.57 | 285.30 | 271.74 | 2.20 | 269.54 | 15.76 |
| P288 | HP360x109 | 6+227.92 | -14.57 | 284.97 | 271.68 | 2.20 | 269.48 | 15.50 |
| P289 | HP360x109 | 6+229.75 | -14.57 | 284.64 | 271.61 | 2.20 | 269.41 | 15.23 |
| P290 | HP360x109 | 6+231.58 | -14.57 | 284.32 | 271.55 | 2.20 | 269.35 | 14.97 |
| P291 | HP360x109 | 6+233.41 | -14.57 | 283.99 | 271.48 | 2.20 | 269.28 | 14.71 |
| P292 | HP360x109 | 6+235.24 | -14.57 | 283.66 | 271.42 | 2.20 | 269.22 | 14.44 |
| P293 | HP360x109 | 6+237.07 | -14.57 | 283.33 | 271.35 | 2.20 | 269.15 | 14.18 |
| P294 | HP360x109 | 6+238.90 | -14.57 | 283.00 | 271.28 | 2.20 | 269.08 | 13.91 |
| P295 | HP360x109 | 6+240.73 | -14.57 | 282.59 | 271.22 | 2.20 | 269.02 | 13.57 |
| P296 | HP360x109 | 6+242.56 | -14.57 | 282.05 | 271.15 | 2.20 | 268.95 | 13.09 |
| P297 | HP360x109 | 6+244.38 | -14.57 | 281.51 | 271.09 | 2.20 | 268.89 | 12.62 |
| P298 | HP360x109 | 6+246.21 | -14.57 | 280.97 | 271.02 | 2.20 | 268.82 | 12.14 |
| P299 | HP360x109 | 6+248.04 | -14.57 | 280.43 | 270.96 | 2.20 | 268.76 | 11.67 |
| P300 | HP360x109 | 6+249.87 | -14.57 | 279.89 | 270.89 | 2.20 | 268.69 | 11.20 |
| P301 | HP360x109 | 6+251.70 | -14.57 | 279.35 | 270.83 | 2.20 | 268.63 | 10.72 |
| P302 | HP360x109 | 6+253.53 | -14.57 | 278.81 | 270.76 | 2.20 | 268.56 | 10.25 |
| P303 | HP360x109 | 6+255.36 | -14.57 | 278.27 | 270.70 | 2.20 | 268.50 | 9.77 |
| P304 | HP360x109 | 6+257.19 | -14.57 | 277.73 | 270.63 | 2.20 | 268.43 | 9.30 |
| P305 | HP360x109 | 6+259.02 | -14.57 | 277.19 | 270.57 | 2.20 | 268.37 | 8.82 |
| P306 | HP360x109 | 6+260.85 | -14.57 | 276.65 | 270.53 | 2.20 | 268.33 | 8.32 |
| P307 | HP360x109 | 6+262.67 | -14.57 | 276.11 | 270.53 | 2.20 | 268.33 | 7.78 |
| P308 | HP360x109 | 6+264.50 | -14.57 | 275.57 | 270.53 | 2.20 | 268.33 | 7.24 |
| P309 | HP360x109 | 6+266.33 | -14.57 | 275.03 | 270.53 | 2.20 | 268.33 | 6.71 |
| P310 | HP360x109 | 6+268.16 | -14.57 | 274.49 | 270.52 | 2.20 | 268.32 | 6.17 |
| P311 | HP360x109 | 6+269.99 | -14.57 | 273.95 | 270.52 | 2.20 | 268.32 | 5.63 |
| P312 | HP360x109 | 6+271.82 | -14.57 | 273.41 | 270.52 | 2.20 | 268.32 | 5.09 |
| P313 | HP360x109 | 6+273.65 | -14.57 | 272.87 | 270.52 | 2.20 | 268.32 | 4.55 |
| P314 | HP360x109 | 6+275.00 | -14.57 | 272.48 | 270.52 | 2.20 | 268.32 | 4.16 |

NOTES:

1. ANCHOR FREE LENGTH IS THE MINIMUM ACCEPTABLE LENGTH.
2. CONTRACTOR SHALL DETERMINE ANCHOR BOND LENGTH REQUIRED TO MEET LOADS LISTED IN ANCHOR SCHEDULE.
3. ALL EXPOSED WALL SURFACES SHALL RECEIVE A CUSTOM FORM LINER FINISH. SEE NOTES AND FORM LINER PATTERNS ON SHEET "RETAINING WALLS ON PROJECT STATE ROUTE 115" FOR INFORMATION REGARDING WALL FINISH.
4. SEE SHEET "RETAINING WALL NO. 7 AND NO. 8 DETAILS" AND SHEET "RETAINING WALL NO. 7 AND NO. 8 ANCHOR WALL NOTES" FOR FURTHER DETAILS PERTAINING TO WALL FACING, ANCHOR INSTALLATION, TESTING, PAYMENT, MATERIAL REQUIREMENTS, AND OTHER REQUIREMENTS FOR ANCHOR WALL CONSTRUCTION AND ACCEPTANCE.

SEALED BY

PRELIMINARY

PLANS

TENNESSEE METRIC D.O.T.

COORDINATES ARE NAD/83(1995), ARE DATUM ADJUSTED BY THE FACTOR OF 1.000 AND TIED TO THE TGRN. ALL ELEVATIONS ARE REFERENCED TO THE NAVD 1988.

STATE OF TENNESSEE
DEPARTMENT OF TRANSPORTATION

# PILE AND ANCHOR SCHEDULES RETAINING WALL NO. 8

SCALE: AS NOTED

9/10/2015
R:_ Infrastructure Project Files\2015 Infra Projects\7681-15-002 ALCOA Hwy (SR 115) WALLS 7 AND 8\06 - CADD\13_RETAINING WALL 8 PILE AND ANCHOR SCHEDULE.sht

| TYPE | YEAR | PROJECT NO. | SHEET NO. |
|---|---|---|---|
| CONST. | 2015 | 47026-3279-14 | 2P8 |

**ANCHOR SCHEDULE FOR:** **Wall 8**

**Row 1**

| Pile # | No. of Anchors (ea) | Elevation (m) | Angle of Inclination (deg) | No. of Strands per Anchor | Design Load (kN) | Test Load (kN) | Minimum Anchor Free Length (m) |
|---|---|---|---|---|---|---|---|
| P1 | 1 | 276.8 | 20.0 | 4 | 556.0 | 741.1 | 15.0 |
| P2 | 1 | 277.0 | 20.0 | 4 | 556.0 | 741.1 | 15.0 |
| P3 | 1 | 277.2 | 20.0 | 4 | 556.0 | 741.1 | 27.0 |
| P4 | 1 | 277.3 | 20.0 | 5 | 623.0 | 830.5 | 27.0 |
| P5 | 1 | 277.5 | 20.0 | 5 | 623.0 | 830.5 | 27.0 |
| P6 | 1 | 277.7 | 20.0 | 5 | 623.0 | 830.5 | 27.0 |
| P7 | 1 | 277.9 | 20.0 | 5 | 623.0 | 830.5 | 27.0 |
| P8 | 1 | 278.1 | 20.0 | 5 | 623.0 | 830.5 | 27.0 |
| P9 | 1 | 278.2 | 20.0 | 5 | 623.0 | 830.5 | 27.0 |
| P10 | 1 | 278.4 | 20.0 | 5 | 623.0 | 830.5 | 27.0 |
| P11 | 1 | 278.6 | 20.0 | 5 | 623.0 | 830.5 | 27.0 |
| P12 | 1 | 278.8 | 20.0 | 5 | 623.0 | 830.5 | 27.0 |
| P13 - P14 | 2 | 278.9 | 20.0 | 5 | 623.0 | 830.5 | 27.0 |
| P15 - P16 | 2 | 279.0 | 20.0 | 5 | 623.0 | 830.5 | 27.0 |
| P17 - P18 | 2 | 279.1 | 20.0 | 5 | 623.0 | 830.5 | 27.0 |
| P19 - P20 | 2 | 279.2 | 20.0 | 5 | 623.0 | 830.5 | 27.0 |
| P21 - P23 | 3 | 279.3 | 20.0 | 5 | 623.0 | 830.5 | 27.0 |
| P24 - P25 | 2 | 279.4 | 20.0 | 5 | 623.0 | 830.5 | 27.0 |
| P26 - P27 | 2 | 279.5 | 20.0 | 5 | 623.0 | 830.5 | 27.0 |
| P28 - P29 | 2 | 279.6 | 20.0 | 5 | 623.0 | 830.5 | 27.0 |
| P30 - P32 | 3 | 279.7 | 20.0 | 5 | 623.0 | 830.5 | 27.0 |
| P33 - P34 | 2 | 279.8 | 20.0 | 5 | 623.0 | 830.5 | 27.0 |
| P35 - P38 | 4 | 279.9 | 20.0 | 5 | 623.0 | 830.5 | 27.0 |
| P39 - P42 | 4 | 280.0 | 20.0 | 5 | 623.0 | 830.5 | 27.0 |
| P43 - P47 | 5 | 280.1 | 20.0 | 5 | 623.0 | 830.5 | 27.0 |
| P48 - P52 | 5 | 280.2 | 20.0 | 5 | 623.0 | 830.5 | 27.0 |
| P53 - P57 | 5 | 280.3 | 20.0 | 5 | 623.0 | 830.5 | 27.0 |
| P58 - P62 | 5 | 280.4 | 20.0 | 5 | 623.0 | 830.5 | 27.0 |
| P63 - P67 | 5 | 280.5 | 20.0 | 5 | 623.0 | 830.5 | 27.0 |
| P68 - P73 | 6 | 280.6 | 20.0 | 5 | 623.0 | 830.5 | 27.0 |
| P74 - P78 | 5 | 280.7 | 20.0 | 5 | 623.0 | 830.5 | 27.0 |
| P79 - P84 | 6 | 280.8 | 20.0 | 5 | 623.0 | 830.5 | 27.0 |
| P85 - P89 | 5 | 280.9 | 20.0 | 5 | 623.0 | 830.5 | 27.0 |
| P90 - P95 | 6 | 281.0 | 20.0 | 5 | 623.0 | 830.5 | 27.0 |
| P96 - P100 | 5 | 281.1 | 20.0 | 5 | 623.0 | 830.5 | 27.0 |
| P101 - P106 | 6 | 281.2 | 20.0 | 5 | 623.0 | 830.5 | 27.0 |
| P107 - P111 | 5 | 281.3 | 20.0 | 5 | 623.0 | 830.5 | 27.0 |
| P112 - P116 | 5 | 281.4 | 20.0 | 5 | 623.0 | 830.5 | 27.0 |
| P117 - P122 | 6 | 281.5 | 20.0 | 5 | 623.0 | 830.5 | 27.0 |
| P123 - P128 | 6 | 281.6 | 20.0 | 5 | 623.0 | 830.5 | 27.0 |
| P129 - P134 | 6 | 281.7 | 20.0 | 5 | 623.0 | 830.5 | 27.0 |
| P135 - P139 | 5 | 281.8 | 20.0 | 5 | 623.0 | 830.5 | 27.0 |
| P140 | 1 | 281.9 | 20.0 | 5 | 623.0 | 830.5 | 27.0 |
| P141 - P144 | 4 | 282.2 | 20.0 | 5 | 623.0 | 830.5 | 27.0 |
| P145 - P152 | 8 | 284.3 | 20.0 | 5 | 667.0 | 889.1 | 35.0 |
| P153 - P163 | 11 | 286.4 | 20.0 | 5 | 667.0 | 889.1 | 23.0 |
| P164 - P173 | 10 | 288.6 | 20.0 | 5 | 667.0 | 889.1 | 26.0 |
| P174 - P188 | 15 | 290.7 | 20.0 | 5 | 712.0 | 949.1 | 23.0 |
| P189 - P201 | 13 | 292.8 | 20.0 | 5 | 712.0 | 949.1 | 25.0 |
| P202 - P227 | 26 | 292.8 | 20.0 | 4 | 556.0 | 741.1 | 25.0 |
| P228 - P239 | 12 | 290.7 | 20.0 | 4 | 556.0 | 741.1 | 23.0 |
| P240 - P242 | 3 | 290.7 | 20.0 | 5 | 623.0 | 830.5 | 20.0 |
| P243 - P258 | 16 | 288.6 | 20.0 | 5 | 623.0 | 830.5 | 18.0 |
| P259 - P277 | 19 | 286.4 | 20.0 | 5 | 623.0 | 830.5 | 16.0 |
| P278 - P283 | 6 | 284.3 | 20.0 | 5 | 623.0 | 830.5 | 16.0 |
| P284 - P288 | 5 | 284.3 | 20.0 | 4 | 556.0 | 741.1 | 16.0 |
| P289 - P294 | 6 | 282.2 | 20.0 | 4 | 556.0 | 741.1 | 16.0 |
| P295 - P298 | 4 | 280.0 | 20.0 | 4 | 556.0 | 741.1 | 16.0 |
| P299 - P302 | 4 | 277.9 | 20.0 | 4 | 556.0 | 741.1 | 16.0 |
| P303 - P306 | 4 | 275.8 | 20.0 | 4 | 556.0 | 741.1 | 16.0 |
| P307 - P310 | 4 | 273.6 | 20.0 | 4 | 556.0 | 741.1 | 16.0 |

**Row 2**

| Pile # | No. of Anchors (ea) | Elevation (m) | Angle of Inclination (deg) | No. of Strands per Anchor | Design Load (kN) | Test Load (kN) | Minimum Anchor Free Length (m) |
|---|---|---|---|---|---|---|---|
| P4 | 1 | 275.2 | 20.0 | 5 | 623.0 | 830.5 | 13.0 |
| P5 | 1 | 275.4 | 20.0 | 5 | 623.0 | 830.5 | 13.0 |
| P6 | 1 | 275.6 | 20.0 | 5 | 623.0 | 830.5 | 13.0 |
| P7 | 1 | 275.7 | 20.0 | 5 | 623.0 | 830.5 | 13.0 |
| P8 | 1 | 275.9 | 20.0 | 5 | 623.0 | 830.5 | 13.0 |
| P9 | 1 | 276.1 | 20.0 | 5 | 623.0 | 830.5 | 13.0 |
| P10 | 1 | 276.3 | 20.0 | 5 | 623.0 | 830.5 | 13.0 |
| P11 | 1 | 276.5 | 20.0 | 5 | 623.0 | 830.5 | 13.0 |
| P12 | 1 | 276.6 | 20.0 | 5 | 623.0 | 830.5 | 13.0 |
| P13 - P15 | 3 | 276.8 | 20.0 | 5 | 623.0 | 830.5 | 13.0 |
| P16 - P17 | 2 | 276.9 | 20.0 | 5 | 623.0 | 830.5 | 13.0 |
| P18 | 1 | 277.0 | 20.0 | 5 | 623.0 | 830.5 | 13.0 |
| P19 | 1 | 277.0 | 20.0 | 5 | 623.0 | 830.5 | 25.0 |
| P20 - P21 | 2 | 277.1 | 20.0 | 5 | 623.0 | 830.5 | 25.0 |
| P22 - P23 | 2 | 277.2 | 20.0 | 5 | 623.0 | 830.5 | 25.0 |
| P24 - P26 | 3 | 277.3 | 20.0 | 5 | 623.0 | 830.5 | 25.0 |
| P27 - P28 | 2 | 277.4 | 20.0 | 5 | 623.0 | 830.5 | 25.0 |
| P29 - P30 | 2 | 277.5 | 20.0 | 5 | 623.0 | 830.5 | 25.0 |
| P31 - P32 | 2 | 277.6 | 20.0 | 5 | 623.0 | 830.5 | 25.0 |
| P33 - P35 | 3 | 277.7 | 20.0 | 5 | 623.0 | 830.5 | 25.0 |
| P36 - P39 | 4 | 277.8 | 20.0 | 5 | 623.0 | 830.5 | 25.0 |
| P40 - P43 | 4 | 277.9 | 20.0 | 5 | 623.0 | 830.5 | 25.0 |
| P44 - P48 | 5 | 278.0 | 20.0 | 5 | 623.0 | 830.5 | 25.0 |
| P49 - P54 | 6 | 278.1 | 20.0 | 5 | 623.0 | 830.5 | 25.0 |
| P55 - P59 | 5 | 278.2 | 20.0 | 5 | 623.0 | 830.5 | 25.0 |
| P60 - P64 | 5 | 278.3 | 20.0 | 5 | 623.0 | 830.5 | 25.0 |
| P65 - P69 | 5 | 278.4 | 20.0 | 5 | 623.0 | 830.5 | 25.0 |
| P70 - P74 | 5 | 278.5 | 20.0 | 5 | 623.0 | 830.5 | 25.0 |
| P75 - P80 | 6 | 278.6 | 20.0 | 5 | 623.0 | 830.5 | 25.0 |
| P81 - P85 | 5 | 278.7 | 20.0 | 5 | 623.0 | 830.5 | 25.0 |
| P86 - P91 | 6 | 278.8 | 20.0 | 5 | 623.0 | 830.5 | 25.0 |
| P92 -P96 | 5 | 278.9 | 20.0 | 5 | 623.0 | 830.5 | 25.0 |
| P97 - P102 | 6 | 279.0 | 20.0 | 5 | 623.0 | 830.5 | 25.0 |
| P103 - P107 | 5 | 279.1 | 20.0 | 5 | 623.0 | 830.5 | 25.0 |
| P108 - P113 | 6 | 279.2 | 20.0 | 5 | 623.0 | 830.5 | 25.0 |
| P114 - P118 | 5 | 279.3 | 20.0 | 5 | 623.0 | 830.5 | 25.0 |
| P119 - P124 | 6 | 279.4 | 20.0 | 5 | 623.0 | 830.5 | 25.0 |
| P125 - P130 | 6 | 279.5 | 20.0 | 5 | 623.0 | 830.5 | 25.0 |
| P131 - P135 | 5 | 279.6 | 20.0 | 5 | 623.0 | 830.5 | 25.0 |
| P136 - P140 | 5 | 279.7 | 20.0 | 5 | 623.0 | 830.5 | 25.0 |
| P141 - P144 | 4 | 280.0 | 20.0 | 5 | 623.0 | 830.5 | 25.0 |
| P145 - P152 | 8 | 282.2 | 20.0 | 5 | 623.0 | 830.5 | 33.0 |
| P153 - P163 | 11 | 284.3 | 20.0 | 5 | 667.0 | 889.1 | 23.0 |
| P164 - P173 | 10 | 286.4 | 20.0 | 5 | 667.0 | 889.1 | 23.0 |
| P174 - P188 | 15 | 288.6 | 20.0 | 5 | 712.0 | 949.1 | 21.0 |
| P189 - P201 | 13 | 290.7 | 20.0 | 5 | 712.0 | 949.1 | 23.0 |
| P202 - P227 | 26 | 290.7 | 20.0 | 4 | 556.0 | 741.1 | 23.0 |
| P228 - P234 | 7 | 286.4 | 20.0 | 4 | 556.0 | 741.1 | 18.0 |
| P235 - P239 | 5 | 288.6 | 20.0 | 4 | 556.0 | 741.1 | 18.0 |
| P240 -P242 | 3 | 288.6 | 20.0 | 5 | 623.0 | 830.5 | 18.0 |
| P243 - P258 | 16 | 286.4 | 20.0 | 5 | 623.0 | 830.5 | 16.0 |
| P259 - P277 | 19 | 282.2 | 20.0 | 4 | 556.0 | 741.1 | 14.0 |
| P278 - P283 | 6 | 280.0 | 20.0 | 4 | 556.0 | 741.1 | 14.0 |
| P284 - P288 | 5 | 280.0 | 20.0 | 4 | 556.0 | 741.1 | 13.0 |
| P289 - P294 | 6 | 277.9 | 20.0 | 4 | 556.0 | 741.1 | 13.0 |
| P295 - P298 | 4 | 275.8 | 20.0 | 4 | 556.0 | 741.1 | 13.0 |
| P299 - P306 | 8 | 273.6 | 20.0 | 4 | 556.0 | 741.1 | 13.0 |

**ANCHOR SCHEDULE FOR:** **Wall 8 (CONTINUED)**

**Row 3**

| Pile # | No. of Anchors (ea) | Elevation (m) | Angle of Inclination (deg) | No. of Strands per Anchor | Design Load (kN) | Test Load (kN) | Minimum Anchor Free Length (m) |
|---|---|---|---|---|---|---|---|
| P19 - P20 | 2 | 274.9 | 20.0 | 5 | 623.0 | 830.5 | 22.0 |
| P21 - P22 | 2 | 275.0 | 20.0 | 5 | 623.0 | 830.5 | 22.0 |
| P23 - P24 | 2 | 275.1 | 20.0 | 5 | 623.0 | 830.5 | 22.0 |
| P25 - P26 | 2 | 275.2 | 20.0 | 5 | 623.0 | 830.5 | 22.0 |
| P27 - P29 | 3 | 275.3 | 20.0 | 5 | 623.0 | 830.5 | 22.0 |
| P30 - P31 | 2 | 275.4 | 20.0 | 5 | 623.0 | 830.5 | 22.0 |
| P32 - P33 | 2 | 275.5 | 20.0 | 5 | 623.0 | 830.5 | 22.0 |
| P34 - P36 | 3 | 275.6 | 20.0 | 5 | 623.0 | 830.5 | 22.0 |
| P37 - P41 | 5 | 275.7 | 20.0 | 5 | 623.0 | 830.5 | 22.0 |
| P42 - P45 | 4 | 275.8 | 20.0 | 5 | 623.0 | 830.5 | 22.0 |
| P46 - P50 | 5 | 275.9 | 20.0 | 5 | 623.0 | 830.5 | 22.0 |
| P51 - P55 | 5 | 276.0 | 20.0 | 5 | 623.0 | 830.5 | 22.0 |
| P56 - P60 | 5 | 276.1 | 20.0 | 5 | 623.0 | 830.5 | 22.0 |
| P61 - P66 | 6 | 276.2 | 20.0 | 5 | 623.0 | 830.5 | 22.0 |
| P67 - P71 | 5 | 276.3 | 20.0 | 5 | 623.0 | 830.5 | 22.0 |
| P72 - P76 | 5 | 276.4 | 20.0 | 5 | 623.0 | 830.5 | 22.0 |
| P77 - P82 | 6 | 276.5 | 20.0 | 5 | 623.0 | 830.5 | 22.0 |
| P83 - P87 | 5 | 276.6 | 20.0 | 5 | 623.0 | 830.5 | 22.0 |
| P88 - P93 | 6 | 276.7 | 20.0 | 5 | 623.0 | 830.5 | 22.0 |
| P94 - P98 | 5 | 276.8 | 20.0 | 5 | 623.0 | 830.5 | 22.0 |
| P99 - P104 | 6 | 276.9 | 20.0 | 5 | 623.0 | 830.5 | 22.0 |
| P105 -P109 | 5 | 277.0 | 20.0 | 5 | 623.0 | 830.5 | 22.0 |
| P110 - P115 | 6 | 277.1 | 20.0 | 5 | 623.0 | 830.5 | 22.0 |
| P116 - P120 | 5 | 277.2 | 20.0 | 5 | 623.0 | 830.5 | 22.0 |
| P121 - P126 | 6 | 277.3 | 20.0 | 5 | 623.0 | 830.5 | 22.0 |
| P127 - P132 | 6 | 277.4 | 20.0 | 5 | 623.0 | 830.5 | 22.0 |
| P133 - P137 | 5 | 277.5 | 20.0 | 5 | 623.0 | 830.5 | 22.0 |
| P138 - P140 | 3 | 277.6 | 20.0 | 5 | 623.0 | 830.5 | 22.0 |
| P141 - P144 | 4 | 277.9 | 20.0 | 5 | 623.0 | 830.5 | 22.0 |
| P145 - P152 | 8 | 280.0 | 20.0 | 5 | 623.0 | 830.5 | 30.0 |
| P153 - P163 | 11 | 282.2 | 20.0 | 5 | 667.0 | 889.1 | 20.0 |
| P164 - P173 | 10 | 284.3 | 20.0 | 5 | 667.0 | 889.1 | 23.0 |
| P174 - P188 | 15 | 286.4 | 20.0 | 5 | 712.0 | 949.1 | 19.0 |
| P189 - P201 | 13 | 288.6 | 20.0 | 5 | 712.0 | 949.1 | 21.0 |
| P202 - P227 | 26 | 286.4 | 20.0 | 4 | 556.0 | 741.1 | 18.0 |
| P228 | 1 | 282.2 | 20.0 | 4 | 556.0 | 741.1 | 13.0 |
| P229 | 1 | 282.2 | 20.0 | 4 | 556.0 | 741.1 | 13.0 |
| P235 - P239 | 5 | 286.4 | 20.0 | 4 | 556.0 | 741.1 | 18.0 |
| P240 - P242 | 3 | 286.4 | 20.0 | 5 | 623.0 | 830.5 | 16.0 |
| P243 - P258 | 16 | 282.2 | 20.0 | 4 | 556.0 | 741.1 | 14.0 |
| P259 - P277 | 19 | 277.9 | 20.0 | 4 | 556.0 | 741.1 | 9.0 |
| P278 - P288 | 11 | 275.8 | 20.0 | 4 | 556.0 | 741.1 | 9.0 |
| P289 - P294 | 6 | 273.6 | 20.0 | 4 | 556.0 | 741.1 | 9.0 |

**Row 4**

| Pile # | No. of Anchors (ea) | Elevation (m) | Angle of Inclination (deg) | No. of Strands per Anchor | Design Load (kN) | Test Load (kN) | Minimum Anchor Free Length (m) |
|---|---|---|---|---|---|---|---|
| P145 - P152 | 8 | 277.9 | 20.0 | 5 | 623.0 | 830.5 | 27.0 |
| P153 - P163 | 11 | 280.0 | 20.0 | 5 | 667.0 | 889.1 | 15.0 |
| P164 - P173 | 10 | 282.2 | 20.0 | 5 | 667.0 | 889.1 | 20.0 |
| P174 - P188 | 15 | 284.3 | 20.0 | 5 | 712.0 | 949.1 | 17.0 |
| P189 - P201 | 13 | 286.4 | 20.0 | 5 | 712.0 | 949.1 | 19.0 |
| P202 - P227 | 26 | 286.4 | 20.0 | 4 | 556.0 | 741.1 | 13.0 |
| P237 - P242 | 6 | 282.2 | 20.0 | 4 | 556.0 | 741.1 | 14.0 |
| P243 - P258 | 16 | 277.9 | 20.0 | 4 | 556.0 | 741.1 | 9.0 |
| P273 - P277 | 5 | 273.6 | 20.0 | 4 | 556.0 | 741.1 | 9.0 |

**Row 5**

| Pile # | No. of Anchors (ea) | Elevation (m) | Angle of Inclination (deg) | No. of Strands per Anchor | Design Load (kN) | Test Load (kN) | Minimum Anchor Free Length (m) |
|---|---|---|---|---|---|---|---|
| P153 - P163 | 11 | 277.9 | 20.0 | 5 | 667.0 | 889.1 | 12.0 |
| P164 - P173 | 10 | 280.0 | 20.0 | 5 | 667.0 | 889.1 | 15.0 |
| P174 - P188 | 15 | 282.2 | 20.0 | 5 | 712.0 | 949.1 | 15.0 |
| P189 - P201 | 13 | 284.3 | 20.0 | 5 | 712.0 | 949.1 | 17.0 |
| P202 - P222 | 21 | 277.9 | 20.0 | 4 | 556.0 | 741.1 | 8.0 |
| P240 - P242 | 3 | 277.9 | 20.0 | 4 | 556.0 | 741.1 | 9.0 |

**Row 6**

| Pile # | No. of Anchors (ea) | Elevation (m) | Angle of Inclination (deg) | No. of Strands per Anchor | Design Load (kN) | Test Load (kN) | Minimum Anchor Free Length (m) |
|---|---|---|---|---|---|---|---|
| P164 - P173 | 10 | 277.9 | 20.0 | 5 | 667.0 | 889.1 | 12.0 |
| P174 - P188 | 15 | 280.0 | 20.0 | 5 | 712.0 | 949.1 | 14.0 |
| P189 - P201 | 13 | 282.2 | 20.0 | 5 | 712.0 | 949.1 | 15.0 |

**Row 7**

| Pile # | No. of Anchors (ea) | Elevation (m) | Angle of Inclination (deg) | No. of Strands per Anchor | Design Load (kN) | Test Load (kN) | Minimum Anchor Free Length (m) |
|---|---|---|---|---|---|---|---|
| P174 - P188 | 15 | 277.9 | 20.0 | 5 | 712.0 | 949.1 | 12.0 |
| P189 - P201 | 13 | 280.0 | 20.0 | 5 | 712.0 | 949.1 | 14.0 |

**Row 8**

| Pile # | No. of Anchors (ea) | Elevation (m) | Angle of Inclination (deg) | No. of Strands per Anchor | Design Load (kN) | Test Load (kN) | Minimum Anchor Free Length (m) |
|---|---|---|---|---|---|---|---|
| P189 - P201 | 13 | 277.9 | 20.0 | 5 | 712.0 | 949.1 | 12.0 |

NOTES:

1. ANCHOR FREE LENGTH IS THE MINIMUM ACCEPTABLE LENGTH.
2. CONTRACTOR SHALL DETERMINE ANCHOR BOND LENGTH REQUIRED TO MEET LOADS LISTED IN ANCHOR SCHEDULE.
3. ALL EXPOSED WALL SURFACES SHALL RECEIVE A CUSTOM FORM LINER FINISH. SEE NOTES AND FORM LINER PATTERNS ON SHEET "RETAINING WALLS ON PROJECT STATE ROUTE 115" FOR INFORMATION REGARDING WALL FINISH.
4. SEE SHEET "RETAINING WALL NO. 7 AND NO. 8 DETAILS" AND SHEET "RETAINING WALL NO. 7 AND NO. 8 ANCHOR WALL NOTES" FOR FURTHER DETAILS PERTAINING TO WALL FACING, ANCHOR INSTALLATION, TESTING, PAYMENT, MATERIAL REQUIREMENTS, AND OTHER REQUIREMENTS FOR ANCHOR WALL CONSTRUCTION AND ACCEPTANCE.

PRELIMINARY

PLANS

TENNESSEE METRIC D.O.T.

COORDINATES ARE NAD/83(1995). ARE DATUM ADJUSTED BY THE FACTOR OF 1.000 AND TIED TO THE TGRN. ALL ELEVATIONS ARE REFERENCED TO THE NAVD 1988.

STATE OF TENNESSEE
DEPARTMENT OF TRANSPORTATION

PILE AND ANCHOR SCHEDULES RETAINING WALL NO. 8 CONTINUED

SCALE: AS NOTED

9/10/2015
R:\- Infrastructure Project Files\2015 Infra Projects\7681-15-002 ALCOA Hwy (SR 115) WALLS 7 AND 8\06 - CADD\14.RETAINING WALL 8 PILE AND ANCHOR SCHEDULE.sht

| TYPE | YEAR | PROJECT NO. | SHEET NO. |
|---|---|---|---|
| CONST. | 2015 | 47026-3279-14 | 2P10 |
| | | | |
| | | | |
| | | | |

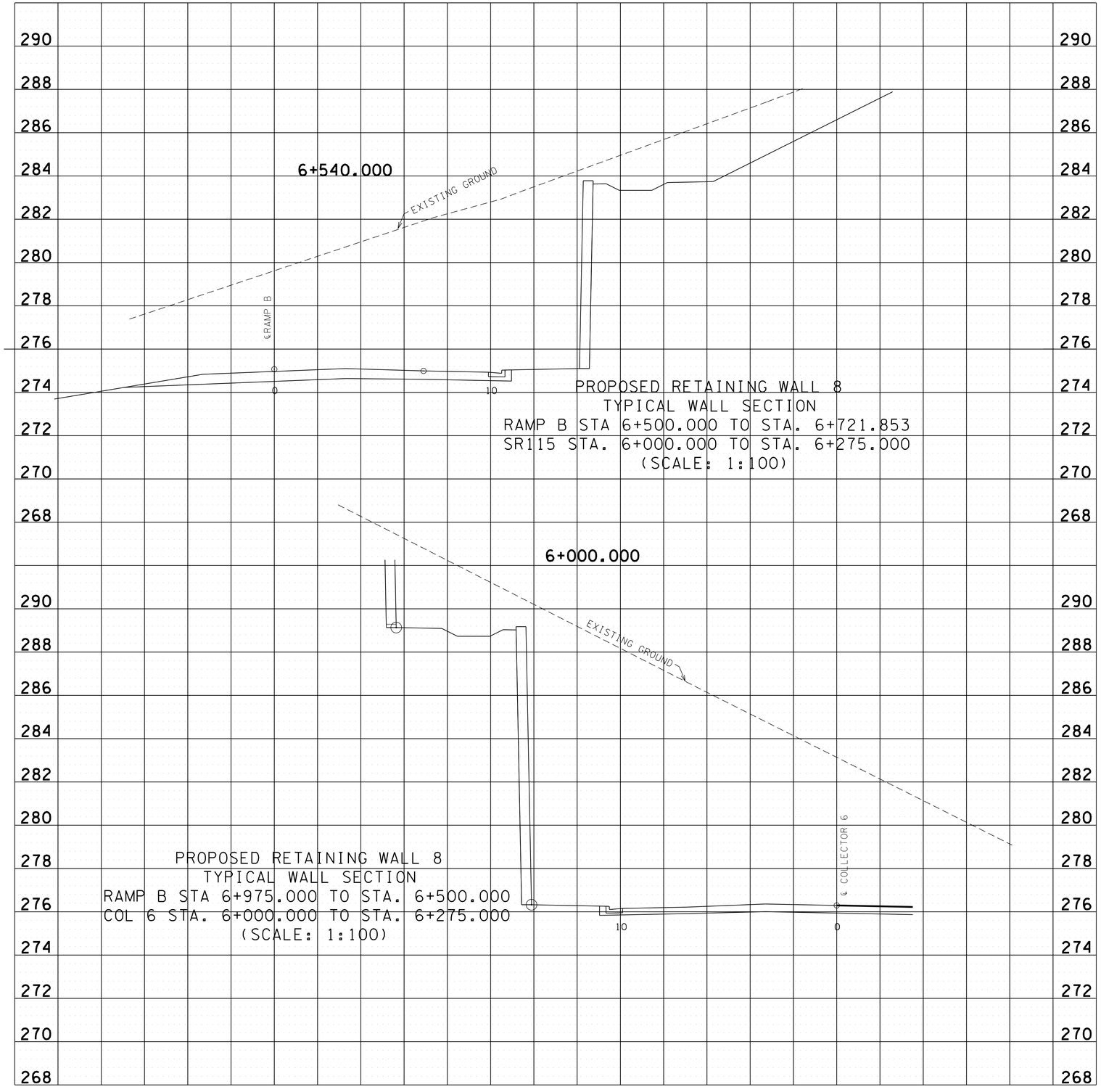


MATERIAL DESCRIPTION PATTERNS

- Topsoil
- Silty Clay
- Low to High Plasticity Clay
- Low Plasticity Clay
- Poorly-graded Sand with Clay
- Sandy Silt
- Clayey Gravel
- Poorly-graded Sand
- BT BORING TERMINATED

CONTRACTOR NOTES:

1. THE GEOTECHNICAL REPORT WHICH INCLUDES DETAILED BORING RECORDS, SOIL AND ROCK TESTING DATA IS AVAILABLE UPON REQUEST. ROCK CORE SAMPLES ARE AVAILABLE FOR INSPECTION BY THE CONTRACTOR.

2. IT IS THE RESPONSIBILITY OF THE CONTRACTOR TO REVIEW THE PLANS, GEOTECHNICAL REPORT, AND BORING LOGS TO BECOME FAMILIAR WITH THE SUBSURFACE CONDITIONS PERTINENT TO THE ASSOCIATED WORK TO BE CONDUCTED BY THE CONTRACTOR. THE CONTRACTOR SHOULD ALSO CONSIDER THEIR EXPERIENCE IN THE PROJECT'S GEOLOGIC AND SUBSURFACE SETTING AND THEIR EXPERIENCE IN DEALING WITH VARIABLE SUBSURFACE CONDITIONS ACROSS A PROJECT SITE TO BASE THEIR BID UPON AND DECISIONS REGARDING APPROPRIATE EQUIPMENT TO BE UTILIZED.

**PRELIMINARY PLANS**

TENNESSEE METRIC D.O.T.

COORDINATES ARE NAD/83(1995), ARE DATUM ADJUSTED BY THE FACTOR OF 1.000 AND TIED TO THE TGRN. ALL ELEVATIONS ARE REFERENCED TO THE NAVD 1988.

STATE OF TENNESSEE
DEPARTMENT OF TRANSPORTATION

TYPICAL GEOLOGICAL SECTIONS
RETAINING WALL 7 AND 8
STA. 5+920.000
TO STA 6+275.000
SCALE: AS NOTED

9/10/2015
R:_Infrastructure Project Files\2015 Infra Projects\768I-15-002 ALCOA Hwy (SR 115) WALLS 7 AND 8\06 - CADD\16_RETAINING WALL 7 AND 8 TYPICAL GEOLOGIC CROSS SECTIONS.sht

| TYPE | YEAR | PROJECT NO. | SHEET NO. |
|---|---|---|---|
| CONST. | 2015 | 47026-3279-14 | 2P10 |
| | | | |
| | | | |
| | | | |

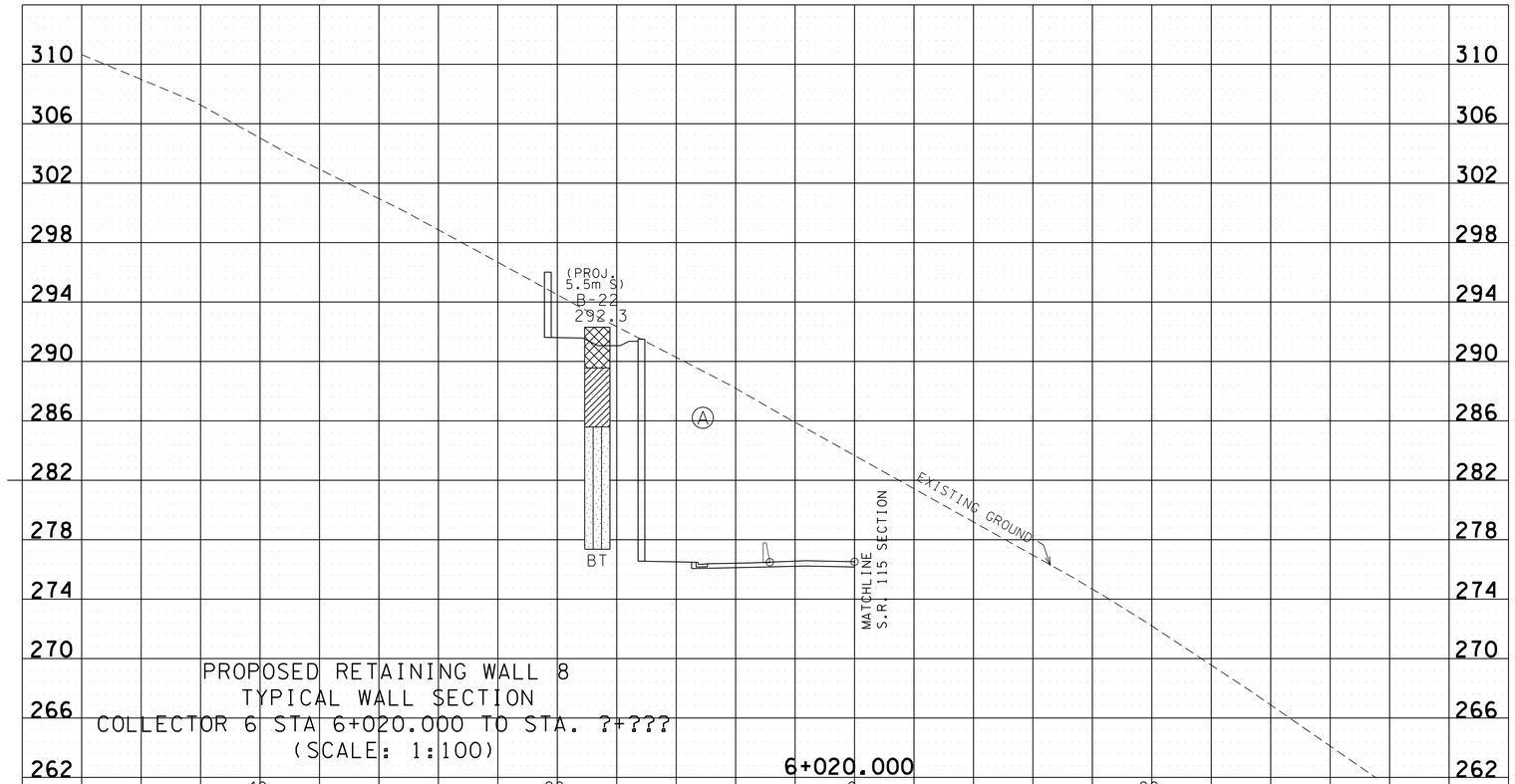


PROPOSED RETAINING WALL 8
TYPICAL WALL SECTION
COLLECTOR 6 STA 6+020.000 TO STA. ?+???
(SCALE: 1:100)

6+020.000

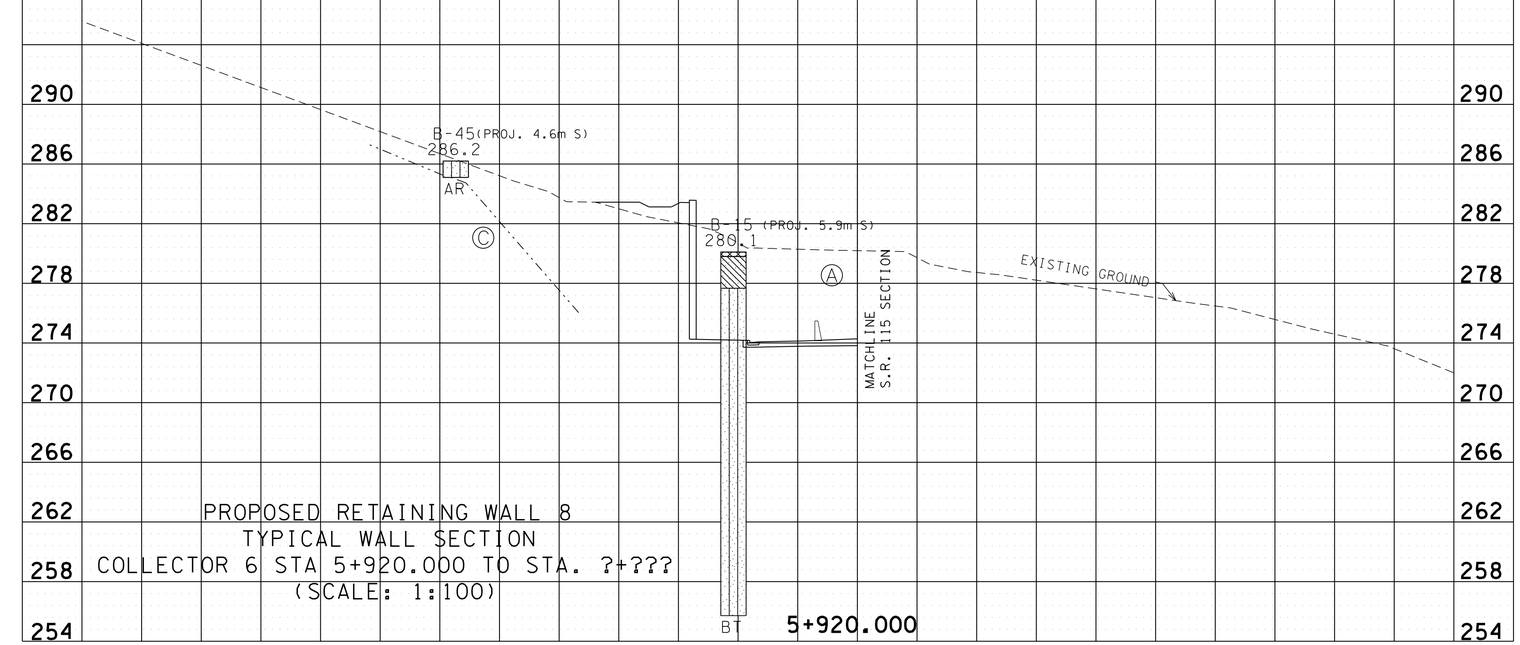


PROPOSED RETAINING WALL 8
TYPICAL WALL SECTION
COLLECTOR 6 STA 5+920.000 TO STA. ?+???
(SCALE: 1:100)

5+920.000

MATERIAL DESCRIPTION PATTERNS

*LITHOLOGIC SYMBOLS*

- FILL (MADE GROUND)
- LOW PLASTICITY SANDY CLAY
- SILTY SAND
- BT BORING TERMINATED
- AR AUGER REFUSAL

SOIL DESCRIPTIONS

- (A) SOIL

CONTRACTOR NOTES:

1. THE GEOTECHNICAL REPORT WHICH INCLUDES DETAILED BORING RECORDS, SOIL AND ROCK TESTING DATA IS AVAILABLE UPON REQUEST. ROCK CORE SAMPLES ARE AVAILABLE FOR INSPECTION BY THE CONTRACTOR.
2. IT IS THE RESPONSIBILITY OF THE CONTRACTOR TO REVIEW THE PLANS, GEOTECHNICAL REPORT, AND BORING LOGS TO BECOME FAMILIAR WITH THE SUBSURFACE CONDITIONS PERTINENT TO THE ASSOCIATED WORK TO BE CONDUCTED BY THE CONTRACTOR. THE CONTRACTOR SHOULD ALSO CONSIDER THEIR EXPERIENCE IN THE PROJECT'S GEOLOGIC AND SUBSURFACE SETTING AND THEIR EXPERIENCE IN DEALING WITH VARIABLE SUBSURFACE CONDITIONS ACROSS A PROJECT SITE TO BASE THEIR BID UPON AND DECISIONS REGARDING APPROPRIATE EQUIPMENT TO BE UTILIZED.

**PRELIMINARY**

**PLANS**

TENNESSEE METRIC D.O.T.

COORDINATES ARE NAD/83(1995), ARE DATUM ADJUSTED BY THE FACTOR OF 1.000 AND TIED TO THE TGRN. ALL ELEVATIONS ARE REFERENCED TO THE NAVD 1988.

STATE OF TENNESSEE
DEPARTMENT OF TRANSPORTATION

TYPICAL GEOLOGICAL SECTIONS
RETAINING WALL 7 AND 8
STA. 5+920.000
TO STA 6+275.000
SCALE: AS NOTED

9/10/2015
R:_Infrastructure Project Files\2015 Infra Projects\7681-15-002 ALCOA Hwy (SR 115) WALLS 7 AND 8\06 - CADD\7_RETAINING WALL 8 TYPICAL GEOLOGIC CROSS SECTIONS.sht

| TYPE | YEAR | PROJECT NO. | SHEET NO. |
|---|---|---|---|
| CONST. | 2015 | 47026-3279-14 | 2P10 |
| | | | |
| | | | |
| | | | |

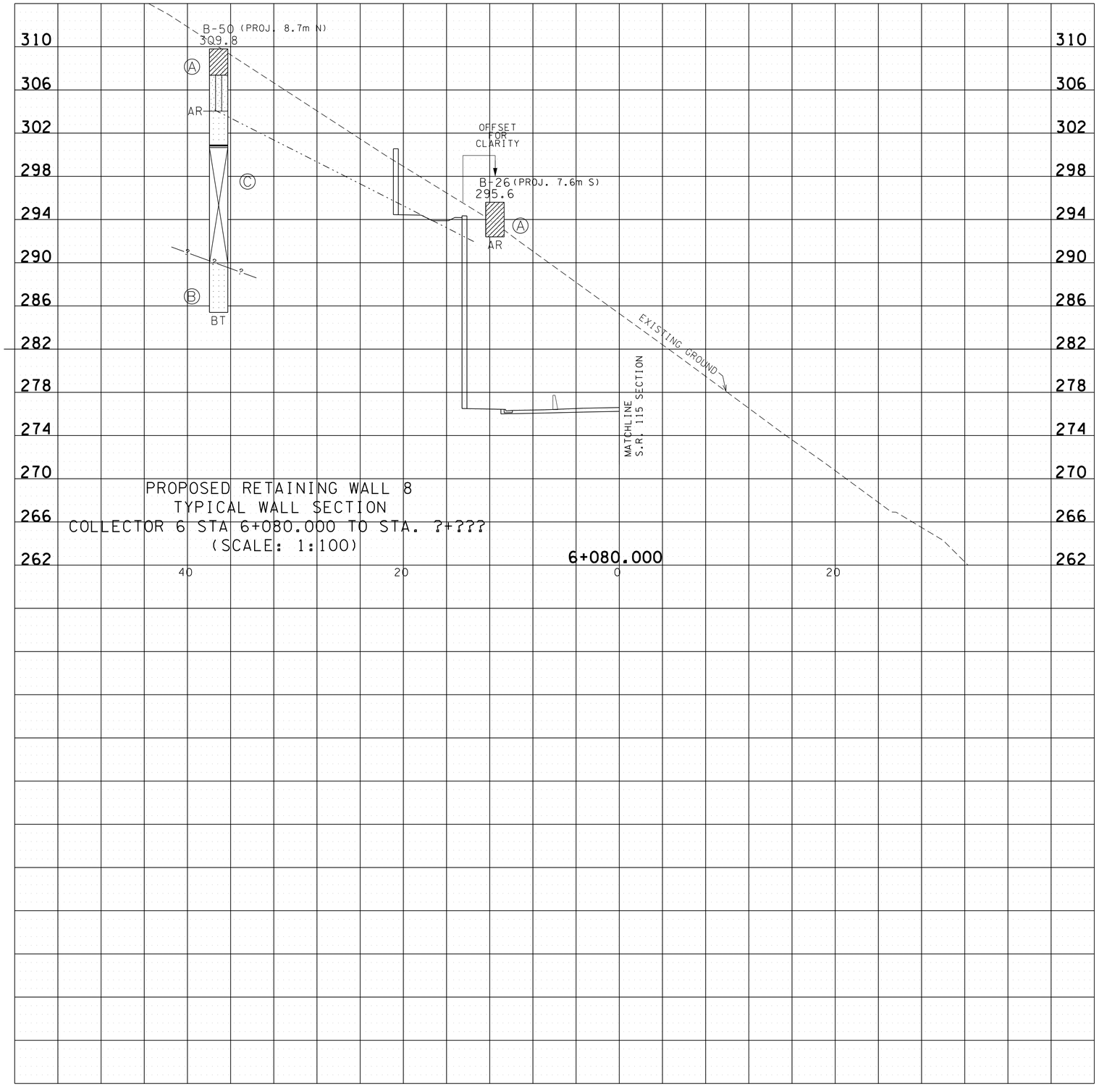


MATERIAL DESCRIPTION PATTERNS

*LITHOLOGIC SYMBOLS*

- FILL (MADE GROUND)
- LOW PLASTICITY SANDY CLAY
- SILTY SAND
- SANDSTONE
- OPEN CAVITY
- NO RECOVERY
- BT BORING TERMINATED
- AR AUGER REFUSAL

SOIL DESCRIPTIONS

- (A) SOIL
- (B) SOUND ROCK
- (C) WEATHERED ROCK

CONTRACTOR NOTES:

1. THE GEOTECHNICAL REPORT WHICH INCLUDES DETAILED BORING RECORDS, SOIL AND ROCK TESTING DATA IS AVAILABLE UPON REQUEST. ROCK CORE SAMPLES ARE AVAILABLE FOR INSPECTION BY THE CONTRACTOR.
2. IT IS THE RESPONSIBILITY OF THE CONTRACTOR TO REVIEW THE PLANS, GEOTECHNICAL REPORT, AND BORING LOGS TO BECOME FAMILIAR WITH THE SUBSURFACE CONDITIONS PERTINENT TO THE ASSOCIATED WORK TO BE CONDUCTED BY THE CONTRACTOR. THE CONTRACTOR SHOULD ALSO CONSIDER THEIR EXPERIENCE IN THE PROJECT'S GEOLOGIC AND SUBSURFACE SETTING AND THEIR EXPERIENCE IN DEALING WITH VARIABLE SUBSURFACE CONDITIONS ACROSS A PROJECT SITE TO BASE THEIR BID UPON AND DECISIONS REGARDING APPROPRIATE EQUIPMENT TO BE UTILIZED.

**PRELIMINARY PLANS**

TENNESSEE METRIC D.O.T.

COORDINATES ARE NAD/83(1995), ARE DATUM ADJUSTED BY THE FACTOR OF 1.000 AND TIED TO THE TGRN. ALL ELEVATIONS ARE REFERENCED TO THE NAVD 1988.

STATE OF TENNESSEE
DEPARTMENT OF TRANSPORTATION

# TYPICAL GEOLOGICAL SECTIONS RETAINING WALL 7 AND 8

STA. 5+920.000
TO STA 6+275.000

SCALE: AS NOTED

9/10/2015
R:_Infrastructure Project Files\2015 Infra Projects\768I-15-002 ALCOA Hwy (SR 115) WALLS 7 AND 8\06 - CADD\18_RETAINING WALL 7 AND 8 TYPICAL GEOLOGIC CROSS SECTIONS.sht

| TYPE | YEAR | PROJECT NO. | SHEET NO. |
|---|---|---|---|
| | | | |
| | | | |
| | | | |
| | | | |

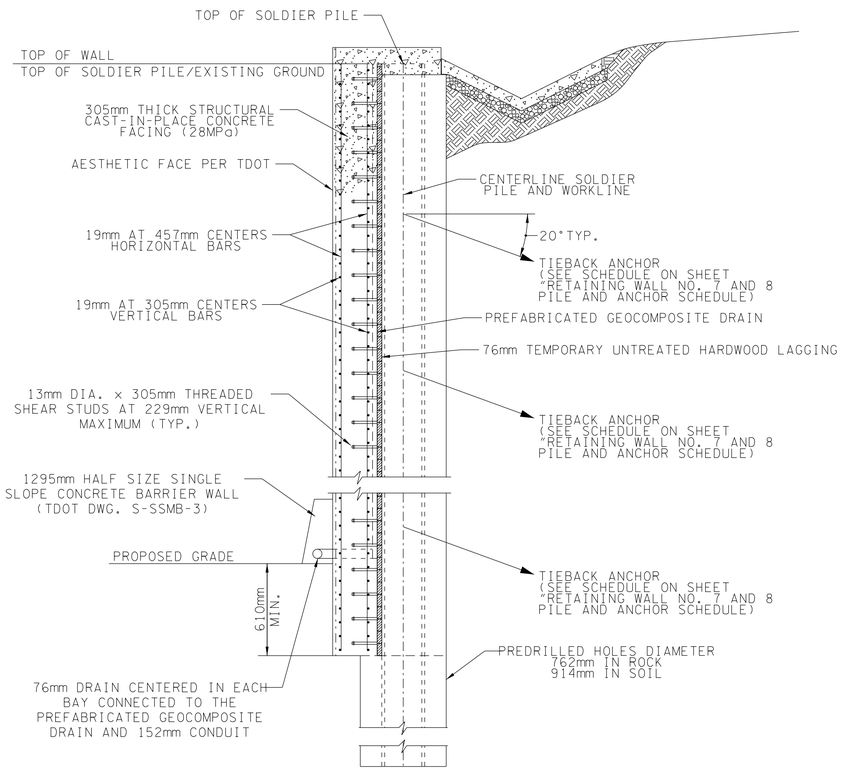


TYPICAL CUT WALL SECTION

NOT TO SCALE

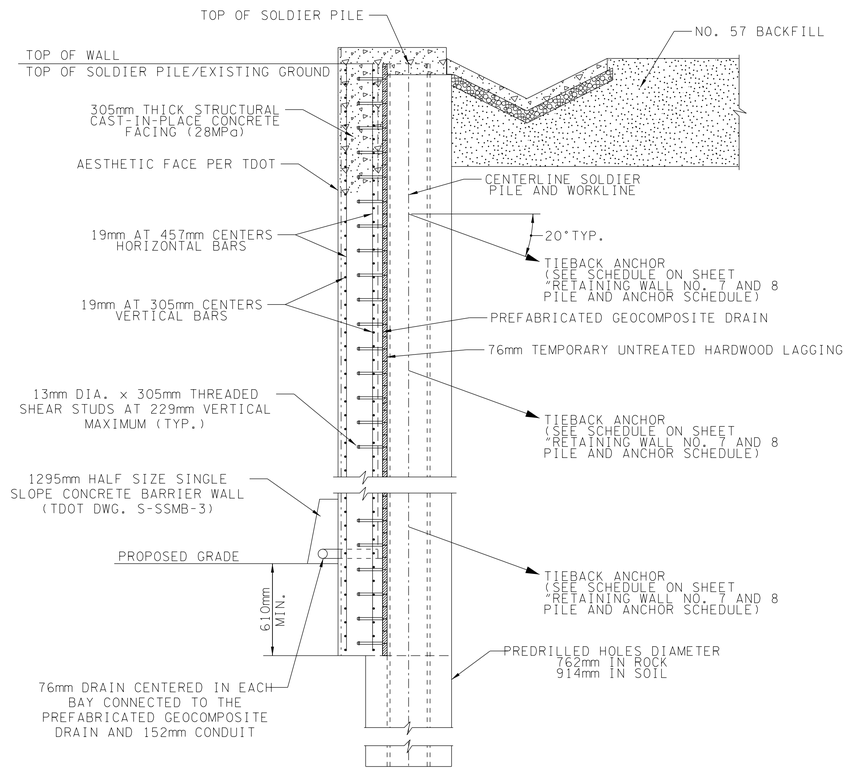


TYPICAL CUT/FILL WALL SECTION

NOT TO SCALE

NOTES:

1. SEE SHEET "RETAINING WALLS NO. 7 & NO. 8 DETAILS" AND SHEET "RETAINING WALLS NO.7 & NO. 8 ANCHOR DETAILS" FOR ADDITIONAL INFORMATION ON DRAINBOARD, SHEAR STUDS, CONTROL/EXPANSION JOINTS, ANCHOR, AND ANCHOR CONNECTIONS.

2. THE MINIMUM DEPTH OF PILE BELOW BOTTOM OF WALL IN SOLID ROCK SHALL BE 1.5m.

**PRELIMINARY PLANS**

SEALED BY

TENNESSEE METRIC D.O.T.

COORDINATES ARE NAD/83(1995), ARE DATUM ADJUSTED BY THE FACTOR OF 1.000 AND TIED TO THE TGRN. ALL ELEVATIONS ARE REFERENCED TO THE NAVD 1988.

STATE OF TENNESSEE
DEPARTMENT OF TRANSPORTATION

# TYPICAL WALL SECTIONS RETAINING WALLS NO. 7 AND 8

SCALE: AS NOTED

9/10/2015
R:_Infrastructure Project Files\2015 Infra Projects\768I-15-002 ALCOA Hwy (SR 115) WALLS 7 AND 8\06 - CADD\17_TYPICAL SECTIONS RETAINING WALL 7 AND 8.sht

| TYPE | YEAR | PROJECT NO. | SHEET NO. |
|---|---|---|---|
| CONST. | 2015 | 47026-3279-14 | 2P8 |

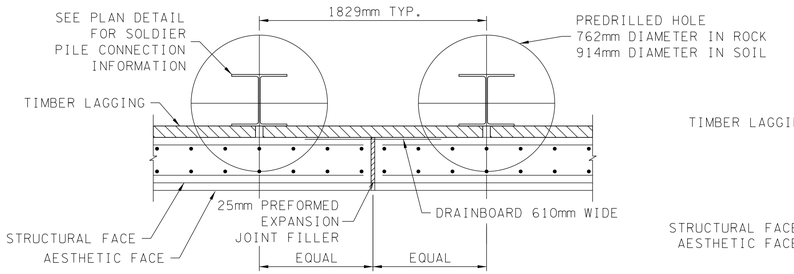


EXPANSION JOINT PLAN DETAIL

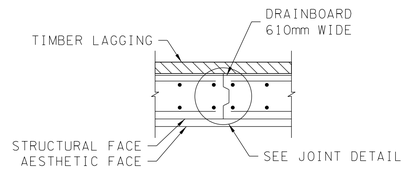


CONTRACTION JOINT PLAN DETAIL

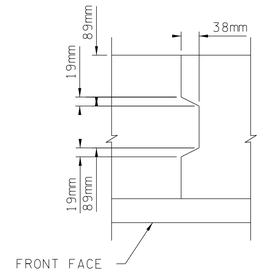


JOINT DETAIL

NOTE: STRUCTURAL FACING AND TEMPORARY LAGGING NOT SHOWN FOR CLARITY.

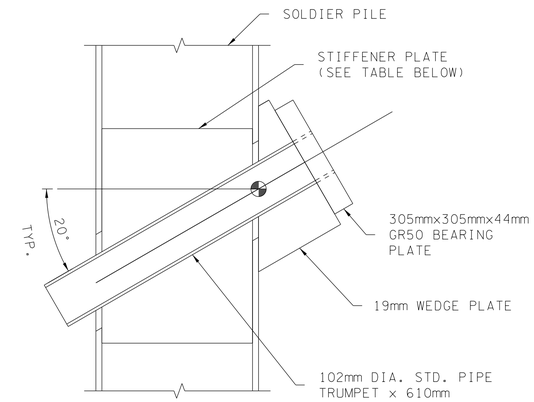


| PILE SIZE | MAX. ANCHOR LOAD (KN) | STIFFENER PLATE SIZE |
|---|---|---|
| HP360x109 | 623 | 320mm x 711mm x 25mm |
| HP360x132 | 667 | 320mm x 711mm x 25mm |
| HP360x152 | 712 | 320mm x 711mm x 25mm |
| HP360x174 | 712 | 320mm x 711mm x 25mm |

ANCHOR CONNECTION DETAIL

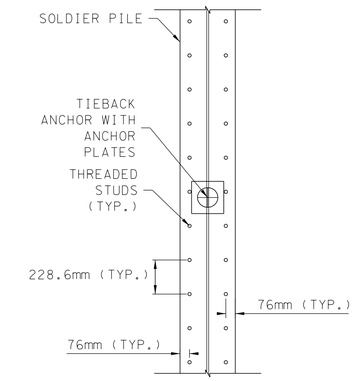


SOLDIER PILE ELEVATION

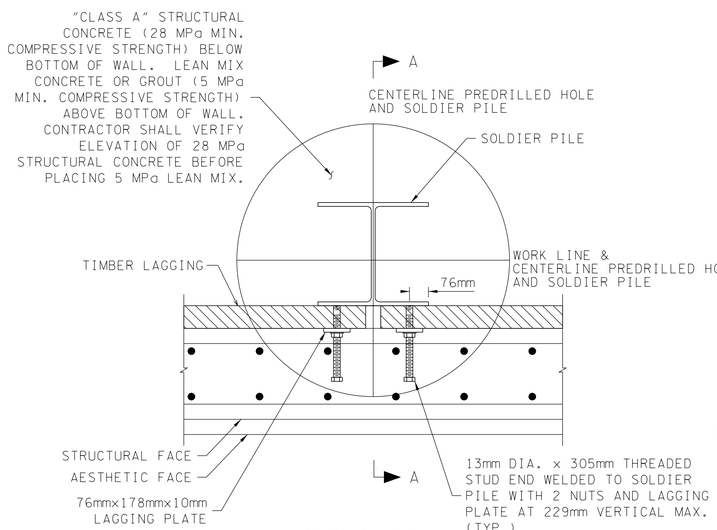


PLAN DETAIL

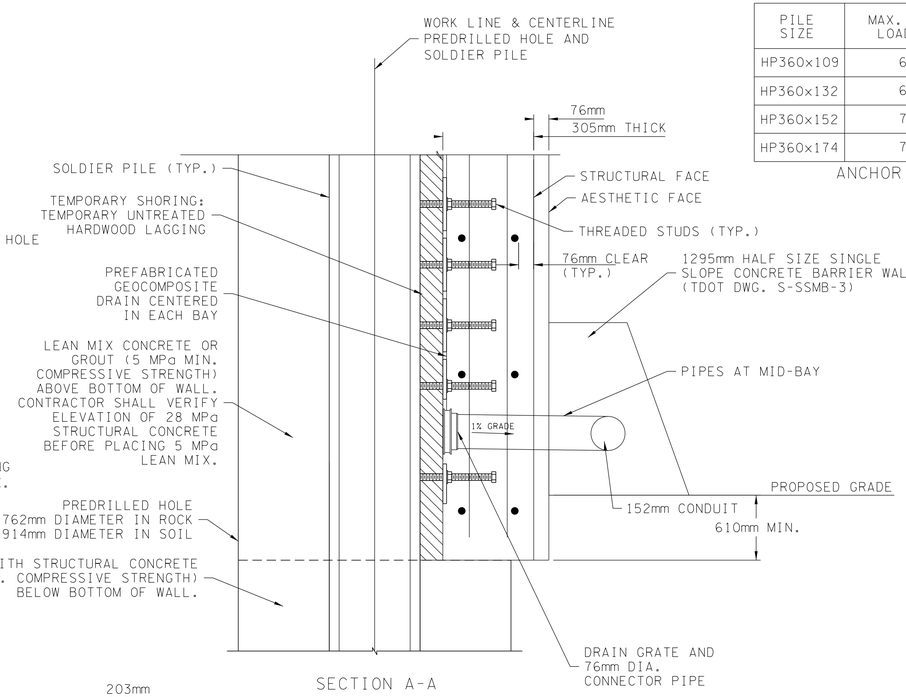


SECTION A-A

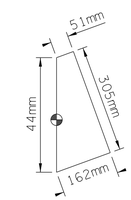


19mm THICK WEDGE PLATES (20°ANCHOR INCLINATION)

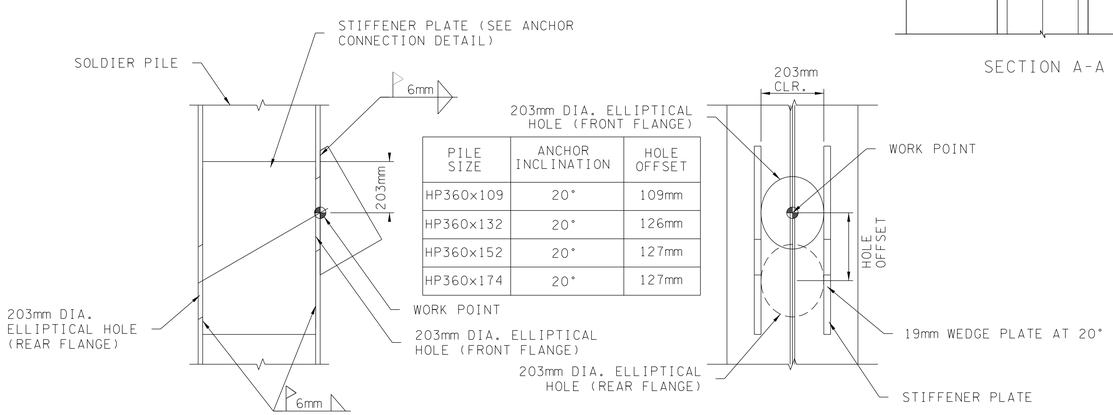


| PILE SIZE | ANCHOR INCLINATION | HOLE OFFSET |
|---|---|---|
| HP360x109 | 20° | 109mm |
| HP360x132 | 20° | 126mm |
| HP360x152 | 20° | 127mm |
| HP360x174 | 20° | 127mm |

PILE FABRICATION DETAIL

SEALED BY

METRIC

COORDINATES ARE NAD/83(1995), ARE DATUM ADJUSTED BY THE FACTOR OF 1.000 AND TIED TO THE TGRN. ALL ELEVATIONS ARE REFERENCED TO THE NAVD 1988.

STATE OF TENNESSEE
DEPARTMENT OF TRANSPORTATION

# PRELIMINARY PLANS

# DETAILS RETAINING WALLS NO. 7 AND 8

SCALE: AS NOTED

9/10/2015
R:_Infrastructure Project Files\2015 Infra Projects\768I-15-002 ALCOA Hwy (SR 115) WALLS 7 AND 8\06 - CADD\18_DETAILS RETAINING WALL 7 AND 8.sht

| TYPE | YEAR | PROJECT NO. | SHEET NO. |
|---|---|---|---|
| CONST. | 2015 | 47026-3279-14 | 2P8 |
| | | | |
| | | | |
| | | | |

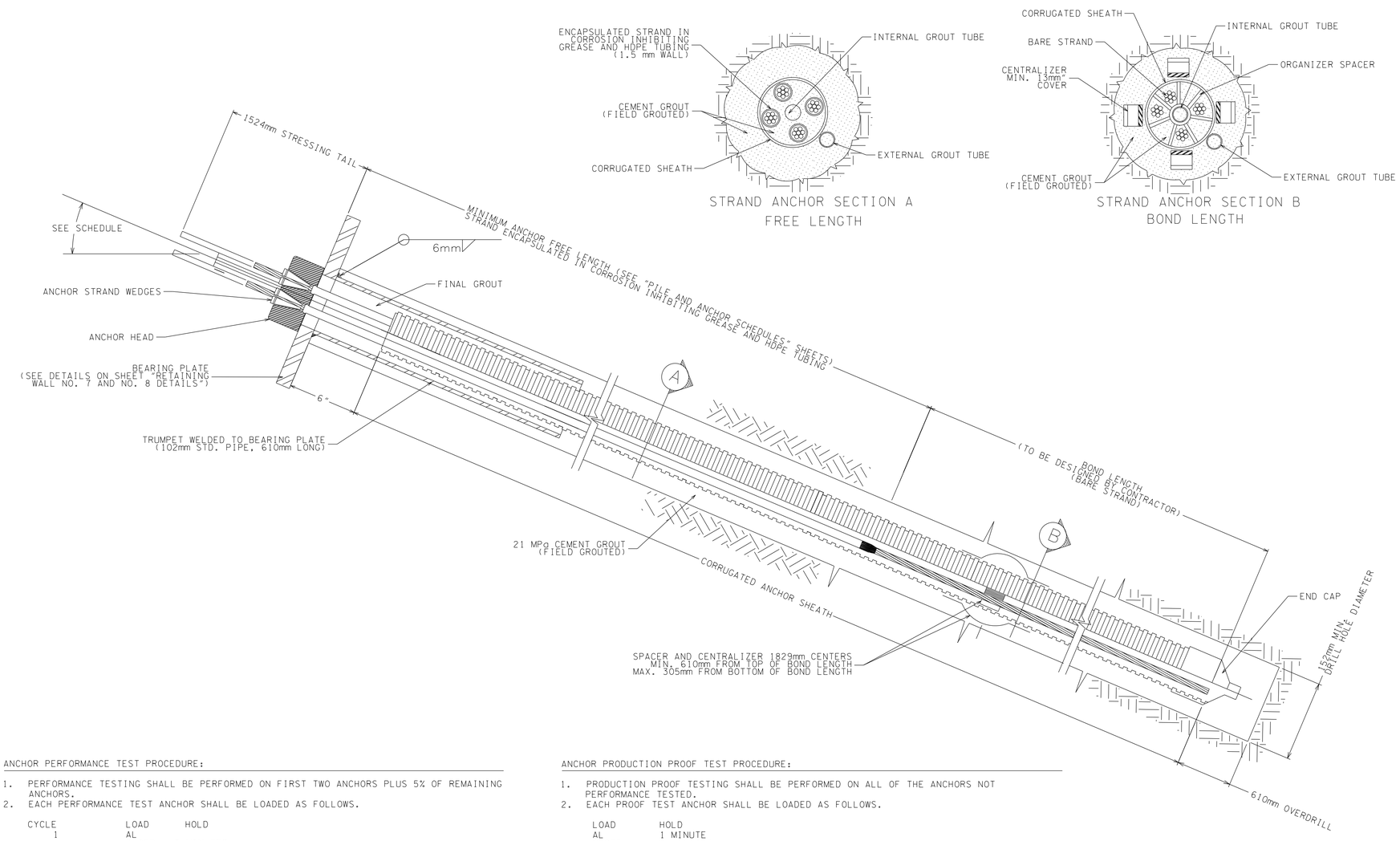


ANCHOR PERFORMANCE TEST PROCEDURE:

1. PERFORMANCE TESTING SHALL BE PERFORMED ON FIRST TWO ANCHORS PLUS 5% OF REMAINING ANCHORS.
2. EACH PERFORMANCE TEST ANCHOR SHALL BE LOADED AS FOLLOWS.

| CYCLE | LOAD | HOLD |
|---|---|---|
| 1 | AL | |
| | 0.25P | 2 MINUTES |
| 2 | AL | |
| | 0.25P | 2 MINUTES |
| | 0.50P | 2 MINUTES |
| 3 | AL | |
| | 0.25P | 2 MINUTES |
| | 0.50P | 2 MINUTES |
| | 0.75P | 2 MINUTES |
| 4 | AL | |
| | 0.25P | 2 MINUTES |
| | 0.50P | 2 MINUTES |
| | 0.75P | 2 MINUTES |
| | 1.00P | 2 MINUTES |
| 5 | AL | |
| | 0.25P | 2 MINUTES |
| | 0.50P | 2 MINUTES |
| | 0.75P | 2 MINUTES |
| | 1.00P | 2 MINUTES |
| | 1.20P | 2 MINUTES |
| 6 | AL | |
| | 0.25P | 2 MINUTES |
| | 0.50P | 2 MINUTES |
| | 0.75P | 2 MINUTES |
| | 1.00P | 2 MINUTES |
| | 1.20P | 2 MINUTES |
| | 1.33P | HOLD FOR CREEP TEST |
| | AL | |

WHERE AL = ALIGNMENT LOAD (.05 P)
AND P = DESIGN TEST LOAD

3. THE TEST ANCHOR SHALL BE MONITORED FOR CREEP AT THE 1.33P LOAD INCREMENT. TOTAL ELONGATIONS SHALL BE RECORDED AT 1,2,3,4,5,6,10,15,20,25,30,45 AND 60 MINUTES.
4. AFTER A SUCCESSFUL PERFORMANCE TEST, THE ANCHOR SHALL BE RE-STRESSED TO DESIGN LOAD AND LOCKED-OFF. A LIFT-OFF TEST SHALL BE PERFORMED TO DETERMINE THE LOAD IN THE ANCHOR (SEE PROOF TEST PROCEDURE).

ANCHOR PRODUCTION PROOF TEST PROCEDURE:

1. PRODUCTION PROOF TESTING SHALL BE PERFORMED ON ALL OF THE ANCHORS NOT PERFORMANCE TESTED.
2. EACH PROOF TEST ANCHOR SHALL BE LOADED AS FOLLOWS.

| LOAD | HOLD |
|---|---|
| AL | 1 MINUTE |
| 0.25P | 2 MINUTES |
| 0.50P | 2 MINUTES |
| 0.75P | 2 MINUTES |
| 1.00P | 2 MINUTES |
| 1.20P | 2 MINUTES |
| 1.33P | HOLD FOR CREEP TEST |

WHERE AL = ALIGNMENT LOAD (.05 P)
AND P = DESIGN TEST LOAD

3. HOLD EACH INCREMENT OF LOADING UNTIL THE LOAD STABILIZES AND RECORD ELONGATION.
4. AT 1.33P, TOTAL ELONGATION SHALL BE RECORDED AT 1,2,3,4,5,6,10 MINUTE INTERVALS. IF THE ELONGATION BETWEEN THE 1 MINUTE AND 10 MINUTE READINGS EXCEEDS 1.0 MILLIMETERS, THE MAXIMUM TEST LOAD SHALL BE HELD AN ADDITIONAL 50 MINUTES AND ELONGATIONS SHALL BE RECORDED AT 10,15,20,25,30,45 AND 60 MINUTES.
5. AFTER COMPLETION OF A SUCCESSFUL PROOF TEST, A LIFT-OFF TEST SHALL BE PERFORMED TO DETERMINE THE LOAD IN THE ANCHOR. IF THE LIFT-OFF LOAD IS LESS THAN 95% OF P, THE END ANCHORAGE SHALL BE RESET AND ANOTHER LIFT-OFF READING MADE.

ANCHOR ACCEPTANCE CRITERIA:

TEST ANCHORS SHALL BE CONSIDERED ACCEPTABLE IF RESULTS MEET ALL REQUIREMENTS OF SPECIFICATIONS AND:

1. THE TOTAL ELASTIC MOVEMENT OBTAINED FROM A PERFORMANCE OR PROOF TEST EXCEEDS 80% OF THE THEORETICAL ELONGATION OF THE FREE STRESSING LENGTH, BUT DOES NOT EXCEED THE THEORETICAL ELONGATION OF THE FREE STRESSING LENGTH PLUS 50% OF THE BOND LENGTH OF THE ANCHOR.
2. THE CREEP AMOUNT OBTAINED FROM A PERFORMANACE OR PROOF TEST DOES NOT EXCEED 1mm DURING THE PERIOD OF 1 MINUTE TO 10 MINUTES. IF THIS VALUE IS EXCEEDED, THEN THE TOTAL CREEP MOVEMENT WITHIN THE PERIOD OF 6 TO 60 MINUTES SHALL NOT EXCEED 2mm.

SEALED BY

TENNESSEE METRIC D.O.T.

COORDINATES ARE NAD/83(1995), ARE DATUM ADJUSTED BY THE FACTOR OF 1.000 AND TIED TO THE TGRN. ALL ELEVATIONS ARE REFERENCED TO THE NAVD 1988.

PRELIMINARY PLANS

STATE OF TENNESSEE
DEPARTMENT OF TRANSPORTATION

ANCHOR DETAILS
RETAINING WALLS
NO. 7 AND 8

SCALE: AS NOTED

9/10/2015
R:_Infrastructure Project Files\2015 Infra Projects\768I-15-002 ALCOA Hwy (SR 115) WALLS 7 AND 8\06 - CADD\19.ANCHOR DETAILS RETAINING WALL 7 AND 8.sht