TENNESSEE D.O.T.	DESIGN DIVISION	FILE NO.

TYPE	YEAR	PROJECT NO.	SHEET NO.
R.O.W.	2012	BR-NHE-40(16)	8C
CONST.	2014	BR-NH-40(16)	8C

REV. 09-18-13: CORRECTED BEGIN PROJECT COORDINATES

ROCK SILT SCREEN DETAIL

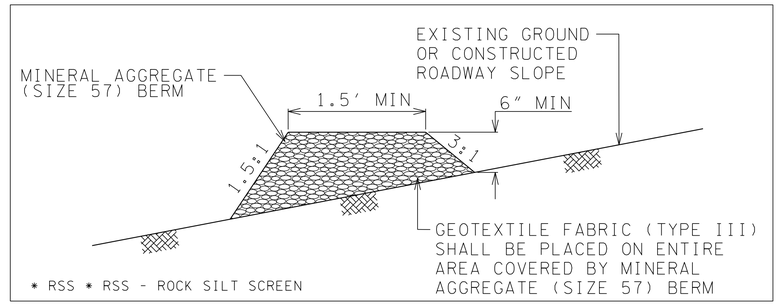

60

65

70004-3291-94
BEGIN PROJ. NO. BR-NH-40(16) CONST.
STA. 61+00.00
N 286027.2654
E 2399060.6470

70004-2291-94
BEGIN PROJ. NO. BR-NHE-40(16) R.O.W.
STA. 61+00.00
N 286027.2654
E 2399060.6470

TYPE 1 EROSION CONTROL BLANKET ABOVE TRM WHERE APPLICABLE

TYPE II TRM

TYPE 1 EROSION CONTROL BLANKET ABOVE TRM WHERE APPLICABLE

TYPE II TRM

DA - 7.3 AC
6.3 AC CLEAN WATER
OUT - 1

DA - 0.5 AC
0.4 AC CLEAN WATER
OUT - 2

PRES. CORRIDOR

S 85° 44' 01"

MADDENS BRANCH

*SFB

WTL-1
0.084 AC ±

PRES. CORRIDOR

PRES. CORRIDOR

US-64/SR-40 OLD COPPER ROAD

PRES. CORRIDOR

LAKE OCOEE

VEGETATED CLASS 'C' RIP-RAP ABOVE WATERLINE, NON-VEGETATED BELOW

PROP. R.O.W.

LAKE OCOEE

S 53° 49' 20"

MATCH LINE STA. 68+00 SEE SHT. NO. 8F

OUT - 4
DA - 0.1 AC

VEGETATED CLASS "C" RIP-RAP ABOVE WATERLINE, NON-VEGETATED BELOW

N

DETAIL FOR CLARITY

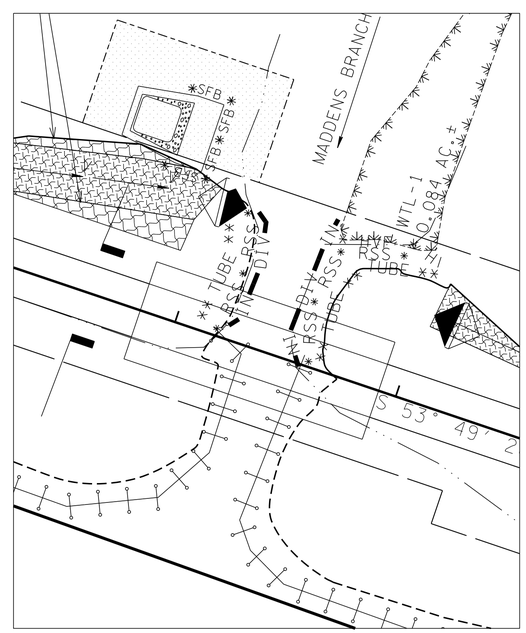

SEALED BY

KATHERINE J. LLOYD
AGRICULTURE & COMMERCE
NO. 106423
STATE OF TENNESSEE
03/11/2014

FINAL PHASE

STATE OF TENNESSEE
DEPARTMENT OF TRANSPORTATION

EROSION PREVENTION AND SEDIMENT CONTROL PLAN

STA. 61+00 TO STA. 68+00

SCALE: 1"= 50'

10-MAR-2014 14:12
C:\Projects\Polk\Project Design\008C.sht