TENNESSEE D.O.T.
DESIGN DIVISION
FILE NO.

TYPE	YEAR	PROJECT NO.	SHEET NO.
R.O.W.	2012	BR-NHE-40(16)	2
CONST.	2014	BR-NH-40(16)	2B

(A) THE SLOPES OF THE SHOULDER AND ROADWAY PAVEMENT SHALL NOT EXCEED AN ALGEBRAIC DIFFERENCE OF 0.07.

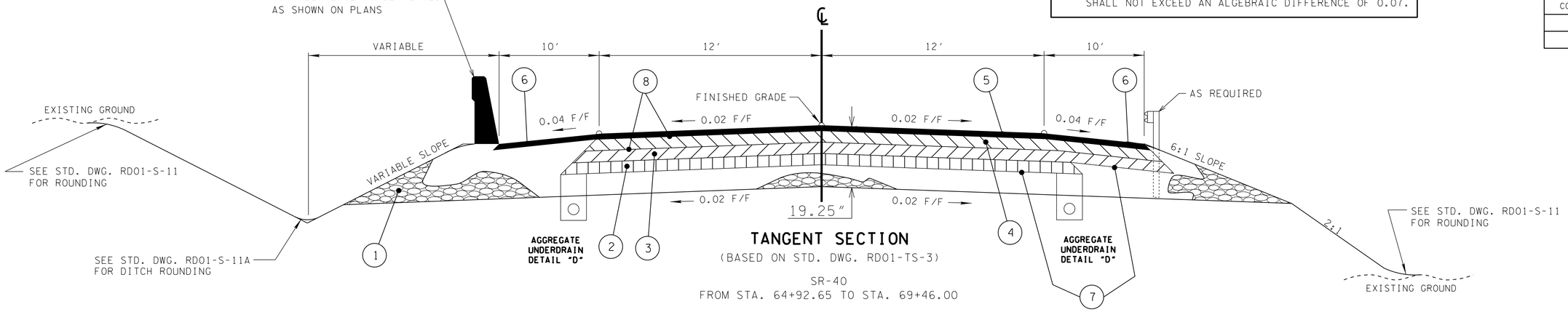

TANGENT SECTION

(BASED ON STD. DWG. RD01-TS-3)

SR-40
FROM STA. 64+92.65 TO STA. 69+46.00

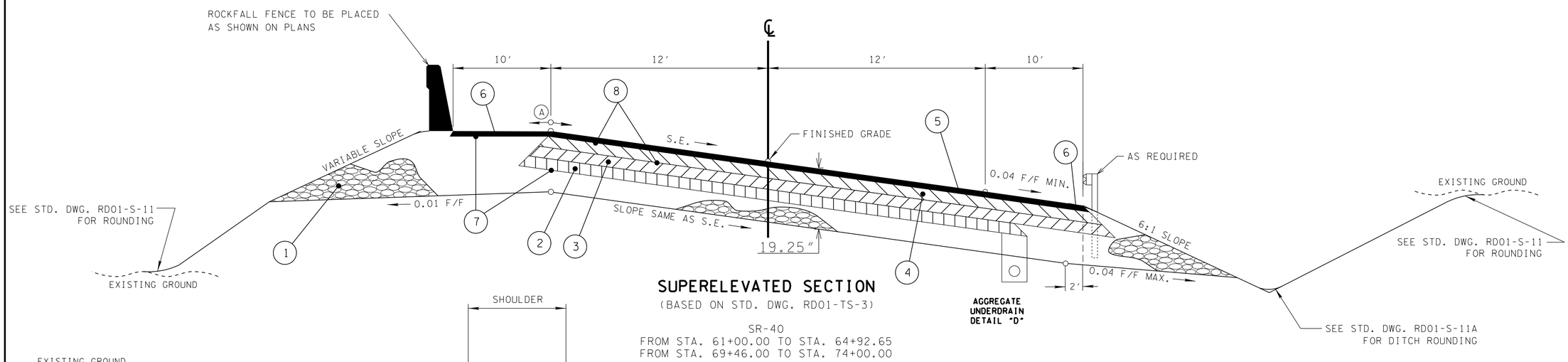

SUPERELEVATED SECTION

(BASED ON STD. DWG. RD01-TS-3)

SR-40
FROM STA. 61+00.00 TO STA. 64+92.65
FROM STA. 69+46.00 TO STA. 74+00.00

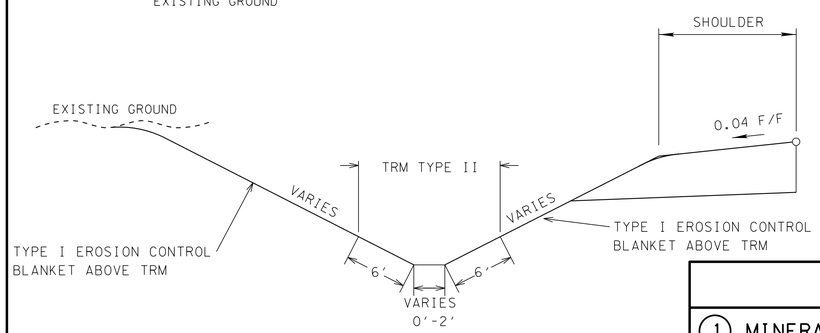

SPECIAL DITCH TYPICAL SECTION

DITCH LT. STA. 61+00.00 - 65+45.00
DITCH LT. STA. 67+05.00 - 72+00.00

PROPOSED PAVEMENT SCHEDULE

(1) MINERAL AGGREGATE BASE @ 10.00"+ THICK 303-01 MINERAL AGGREGATE, TYPE A BASE, GRADING "D"	(5) BITUMINOUS SURFACE @ 1.25"+ THICK (APPROX 132.5 LBS/SY) 411-01.10 ACS MIX (PG64-22) GRADING "D"
(2) BITUMINOUS BASE @ 3.00"+ THICK (APPROX 270 LBS/SY) 307-01.02 ASPHALT CEMENT(PG64-22) GRADING "A-S" 307-01.03 AGGREGATE (BPMB-HM) GRADING "A-S" MIX	(6) BITUMINOUS SURFACE @ 1.50"+ THICK (APPROX 154.5 LBS/SY) 411-01.07 ACS MIX (PG64-22) GRADING "E" SHOULDER
(3) BITUMINOUS BASE @ 3.00"+ THICK (APPROX 345 LB/SY) 307-01.01 ASPHALT CONCRETE MIX (PG64-22) (BPMB-HM) GRADING "A"	(7) BITUMINOUS MATERIAL FOR PRIME COAT 402-01 BITUMINOUS MATERIAL FOR PRIME COAT (PC) @ 0.30-0.35 GAL/SY 402-02 AGGREGATE FOR COVER MATERIAL (PC) @ 8-12 LB./SQ. YD.
(4) BITUMINOUS BINDER @ 2.00"+ THICK (APPROX 226 LB/SY) 307-01.08 ASPHALT CONCRETE MIX (PG64-22) (BPMB-HM) GRADING "B-M2"	(8) BITUMINOUS MATERIAL FOR TACK COAT @ 0.07 GAL/SY 403-01 BITUMINOUS MATERIAL FOR TACK COAT (TC)

SEALED BY

03/11/2014

STATE OF TENNESSEE
DEPARTMENT OF TRANSPORTATION

TYPICAL SECTIONS

10-MAR-2014 14:06
C:\Projects\Polk\Project Design\002B.sht