TYPE	YEAR	PROJECT NO.	SHEET NO.
R.O.W.	2012	BR-NHE-40(16)	8A
CONST.	2014	BR-NH-40(16)	8A

REV. 09-18-13: CORRECTED BEGIN PROJECT COORDINATES

TENNESSEE D.O.T.
DESIGN DIVISION
FILE NO.

ROCK SILT SCREEN DETAIL

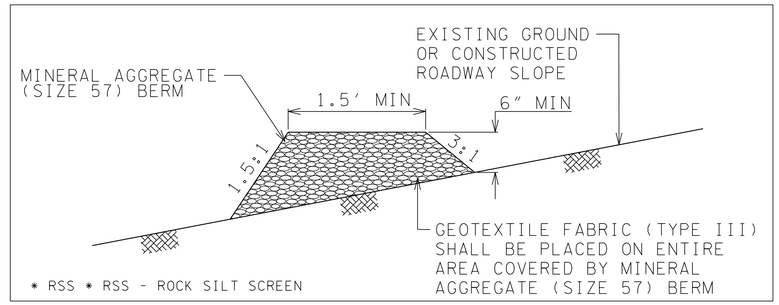

60

65

70004-3291-94
BEGIN PROJ. NO. BR-NH-40(16) CONST.
STA. 61+00.00
N 286027.2654
E 2399060.6470

70004-2291-94
BEGIN PROJ. NO. BR-NHE-40(16) R.O.W.
STA. 61+00.00
N 286027.2654
E 2399060.6470

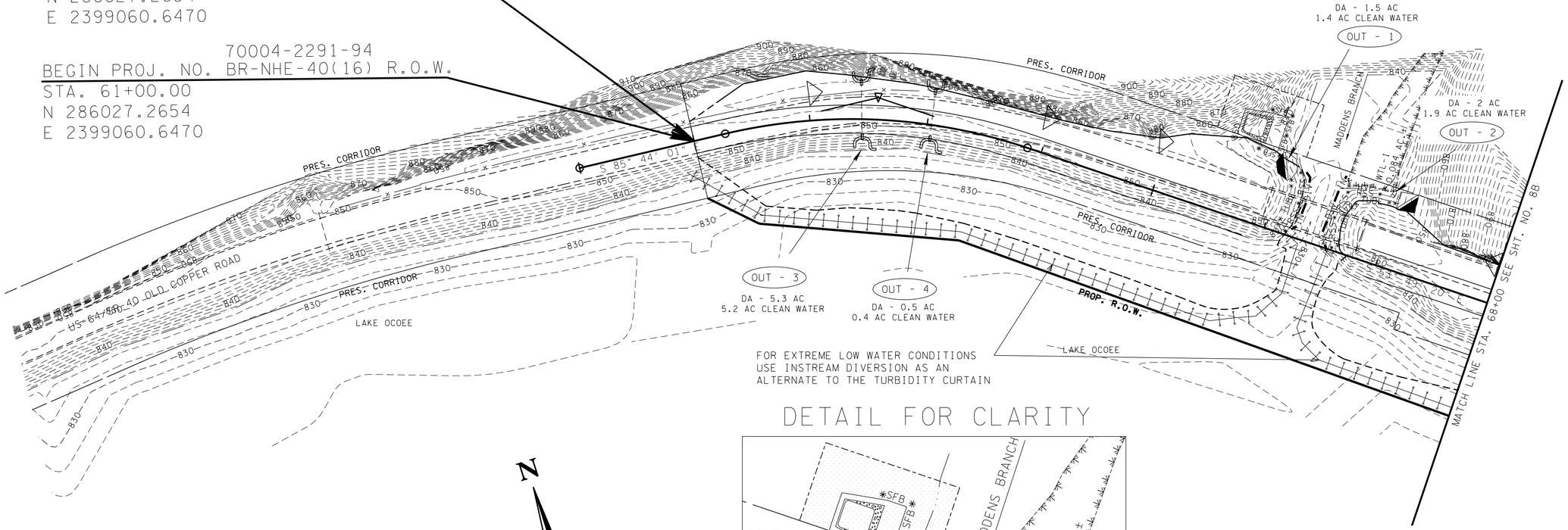

FOR EXTREME LOW WATER CONDITIONS USE INSTREAM DIVERSION AS AN ALTERNATE TO THE TURBIDITY CURTAIN

DETAIL FOR CLARITY

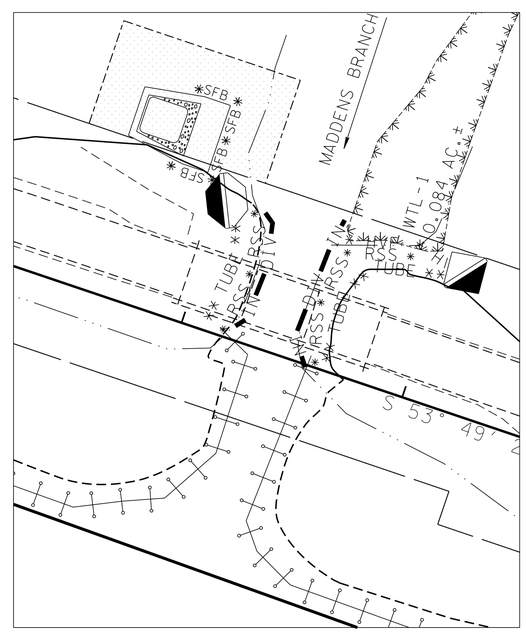

N

SEALED BY

03/11/2014

CLEARING & GRUBBING

STATE OF TENNESSEE
DEPARTMENT OF TRANSPORTATION

EROSION PREVENTION AND SEDIMENT CONTROL PLAN

STA. 61+00 TO STA. 68+00

SCALE: 1"= 50'

10-MAR-2014 14:11
C:\Projects\Polk\Project Design\008A.sht