TYPE	YEAR	PROJECT NO.	SHEET NO.
CONST.	2015	NH-14(55)	28

ESTIMATED SIGNAL QUANTITIES

	ITEM NO.	DESCRIPTION	UNIT	QUANTITY
1	713-15.07	SUSPENDED FLAT SHEET ALUMINUM SIGN (0.080" THICK)	EACH	9
2	713-15.40	SIGN INSTALLATION (STREET NAME SIGN)	LS	1
3	730-01.02	REMOVAL OF SIGNAL EQUIPMENT	EACH	1
	730-02.09	SIGNAL HEAD ASSEMBLY (130 WITH BACKPLATE)	EACH	9
	730-02.17	SIGNAL HEAD ASSEMBLY (150 A2H WITH BACKPLATE)	EACH	15
	730-02.30	SIGNAL HEAD ASSEMBLY (130 A3 WITH BACKPLATE)	EACH	3
	730-02.31	SIGNAL HEAD ASSEMBLY (130 A3 POLE MOUNTED)	EACH	1
	730-02.32	SIGNAL HEAD ASSEMBLY (150 A2V POLE MOUNTED)	EACH	7
	730-03.21	INSTALL PULL BOX (TYPE B)	EACH	6
4	730-03.24	INSTALL PULL BOX (FIBER OPTIC-TYPE B)	EACH	2
5	730-05.01	ELECTRICAL SERVICE CONNECTION	EACH	2
	730-08.02	SIGNAL CABLE - 5 CONDUCTOR	L.F.	425
	730-08.03	SIGNAL CABLE - 7 CONDUCTOR	L.F.	4948
	730-09.01	SPAN WIRE ASSEMBLY (46,599 LBS. MIN. BRK STRENGTH)	L.F.	664
	730-10.01	TETHER WIRE ASSEMBLY - 1/4" DIAMETER	L.F.	664
	730-12.02	CONDUIT 2" DIAMETER (PVC)	L.F.	522
	730-12.16	CONDUIT (2" DIAMETER SCHEDULE 80)	L.F.	398
	730-12.03	CONDUIT 3" DIAMETER (PVC)	L.F.	64
6	730-13.08	VEHICLE DETECTOR (VIDEO IMAGING AND RADAR SYSTEM)	EACH	8
7	730-13.09	VEHICLE DETECTOR (EMERGENCY PREEMPTION)	EACH	8
8	730-15.32	CABINET (EIGHT PHASE BASE MOUNTED)	EACH	2
9	730-16.02	EIGHT PHASE ACTUATED CONTROLLER	EACH	2
10	730-23.01	STEEL STRAIN POLE (SIGNAL SUPPORT)	EACH	4
11	730-23.36	CANTILEVER SIGNAL SUPPORT (1 ARM @ 70')	EACH	1
11	730-23.37	CANTILEVER SIGNAL SUPPORT (1 ARM @ 75')	EACH	3
12	730-40	TEMPORARY TRAFFIC SIGNAL SYSTEM	EACH	1

FOOTNOTES

1 FOR SEVEN (7) R3-5 SIGNS AND TWO (2) R10-5 SIGNS.

2 FOR FOUR (4) 18" X 96" STREET NAME SIGNS AT THE INTERSECTION OF SR-14 WITH EYGPT CENTRAL ROAD AND SIX (6) 18" X 96" STREET NAME SIGNS FOR THE INTERSECTION OF SR-14 WITH BOLEN HUSE ROAD/OLD BROWNSVILLE ROAD. COST OF SIGNS, INSTALLATION AND HARDWARE TO BE INCLUDED IN THE PRICE BID FOR ITEM 713-15.40 FOR PAYMENT BY THE CONTRACTOR. SEE SIGN SCHEDULE SHEET FOR DETALS.

3 INCLUDES THE REMOVAL OF ALL SPAN WIRE, CONTROLLER CABINET, SIGNAL HEADS, SIGNAL POLES AND ANY OTHER SIGNAL EQUIPMENT AT THE INTERSECTION OF SR-14 WITH BOLEN HUSE ROAD/OLD BROWNSVILLE ROAD. ALL SALVAGE ITEMS ARE TO BECOME THE PROPERTY OF SHELBY COUNTY.

4 PER REQUEST BY THE CITY OF MEMPHIS AND SHELBY COUNTY. SEE SHEETS 180 AND 180B FOR LOCATIONS.

5 THE CONTRACTOR SHALL BE RESPONSIBLE FOR CONTACTING THE LOCAL UTILITY TO OBTAIN THE ESTIMATE FOR ANY CHARGES BY THE UTILITY FOR PROVIDING ELECTRICAL SERVICE TO THE SIGNAL CONTROLLER. THESE CHARGES SHALL BE INCLUDED IN THE PRICE BID FOR ITEM 730-05.01 FOR PAYMENT BY THE CONTRACTOR.

6 MULTI-SENSOR (VIDEO IMAGING AND RADAR) VEHICLE DETECTION SYSTEM SHALL BE AN ITERIS VANTAGE VECTOR VIDEO/RADAR SYSTEM. INCLUDES EIGHT (8) VIDEO IMAGING CAMERA SENSORS, EIGHT (8) RADAR SENSORS, EIGHT (8) SENSOR DATA COMBINERS EIGHT (8) DETECTION PROCESSORS, EIGHT (8) USB MOUSE PORTS, BELDEN 8281 COAXIAL CABLE OR APPROVED EQUIVALENT, AND 1,948 FEET OF 16 AWG THREE-CONDUCTOR POWER CABLING. SEE SPECIAL PROVISION 730M FOR ADDITIONAL INFORMATION.

FOOTNOTES CONTINUES

7 THE EMERGENCY PRE-EMPT SYSTEM SHALL BE A 3M OPTICOM SYSTEM. INCLUDES OPTICAL DETECTORS, CONFIRMATION LAMPS (PAR 90), POLE MOUNTED BEACONS, FOUR-CHANNEL PHASE SELECTOR, CARD RACK (OPTICOM 760), 1,807 FEET OF DETECTOR CABLE, AND ALL OTHER CONNECTIONS AND HARDWARE FOR A FUNCTIONAL EMERGENCY PREEMPTION SYSTEM INCLUDING FIELD FINE-TUNING.
POLE MOUNTED BEACONS SHALL BE INSTALLED ON EACH CANTILEVER SIGNAL POLE AND ON EACH STRAIN POLE AS DIRECTED BY THE ENGINEER.

8 SEE SPECIAL PROVISION 730M FOR ADDITIONAL INFORMATION FOR CONTROLLER CABINET.

9 THE CONTROLLERS SHALL BE EAGLE EPAC M52 KEYBOARD UNITS WITH BUILT IN PORT 3 FIBER MODEM (SINGLE MODE), AND BUILT IN STRETCH AND DELAY FOR EACH FEATURES FOR EACH PHASE WITH A 12-CHANNEL SIGNAL MONITOR UNIT INSTALLED AS MODEL EDI SSM 12LE-P.

10 FOR SR-14 AT BOLEN HUSE/OLD BROWNSVILLE ROAD; MOMENT CAPACITY = 824,638 FT.- LBS., FOOTING DEPTH = 39 FT. AND FOOTING DIAMETER = 4 FT FOR STRAIN POLES NO. 1 AND NO 3.
MOMENT CAPACITY = 505,271 FT.- LBS., FOOTING DEPTH = 29 FT. AND FOOTING DIAMETER = 4 FT. FOR STRAIN POLES NO. 2 AND NO 4.
STRAIN POLES NOS. 1 AND 3 SHALL HAVE 15 FT. MAST ARMS INSTALLED, STRAIN POLE 2 SHALL HAVE A 50 FT. MAST ARM INSTALLED, AND STRAIN POLE 4 SHALL HAVE A 30 FT. MAST ARM INSTALLED FOR VIDEO/RADAR IMAGING SYSTEMS. INSTALLATION TO BE DONE AS DIRECTED BY THE ENGINEER.

11 TO BE USED AT THE INTERSECTION OF EGYPT CENTRAL ROAD AND SR-14. SEE SHEET 180 FOR LOCATIONS. ALL FOUR (4) SIGNAL POLES TO BE 35 FT. ABOVE FINISH GRADE ELEVATION AT THIS INTERSECTION FOR ATTACHMENT OF LUMINAIRE TO EACH POLE AS DIRECTED BY THE ENGINEER.

12 TO BE USED AT SR-14 & BOLEN HUSE ROAD/OLD BROWNSVILLE ROAD. INCLUDES THE ADJUSTMENT OF SIGNAL HEADS, AND ANY OTHER SIGNAL RELATED EQUIPMENT DURING THE VARIOUS PHASES OF CONSTRUCTION AT THIS INTERSECTION AS DIRECTED BY THE ENGINEER.

SPECIAL NOTES REGARDING SIGNAL HEADS

(1) ALL CIRCULAR AND ARROW INDICATIONS WITHIN ALL VEHICULAR SIGNAL HEADS PROPOSED FOR THIS PROJECT SHALL CONSIST OF AN LED (LIGHT EMITTING DIODE) SIGNAL MODULE UNLESS OTHERWISE NOTED IN THE PLANS.

(2) CIRCULAR INDICATIONS SHALL MEET "ITE VTCSH-LED CIRCULAR SIGNAL SUPPLEMENT" FOR EXPANDED/EXTENDED VIEW.
ARROW INDICATIONS SHALL MEET "ITE VTCSH-3 LED ARROW SPECIFICATION" FOR EXPANDED/EXTENDED VIEW.

(3) INCANDESCENT OR SCREW-IN MODULES ARE NOT ACCEPTABLE.

(4) COMPATIBILTY WITH CONFLICT MONITORS AND LOAD SWITCHES SHALL BE TESTED AND CONFIRMED.

(5) MANUFACTURER SHALL PROVIDE A MINIMUM FIVE-YEAR WARRANTY FOR OPERATION OF THE UNIT.

(6) THE ATTACHMENT OF THE TETHER WIRE TO THE POLES SHALL BE LOCATED BELOW THE LOWEST ELEVATION OF THE SIGNAL HEADS.

SPECIAL NOTES

(7) THE CONTRACTOR SHALL CONTACT THE TRAFFIC ENGINEERING OFFICE @ (901) 576-6710 AT LEAST 48 HOURS PRIOR TO POURING CONCRETE FOR POLE FOUNDATIONS AND FOR INSPECTION OF CONDUIT INSTALLATION AT ALL SIGNAL POLE BASES.

(8) THE T.D.O.T. CONSTRUCTION OFFICE SHALL PROVIDE THE CITY OF MEMPHIS AND THE CITY OF BARTLETT TRAFFIC ENGINEERING OFFICES THE MATERIAL SUBMITTAL FOR REVIEW AND COMMENTS.

* ESTIMATED FOUNDATION QUANTITIES (4 FT. DIAMETER)

FOOTING DEPTH	① T400 REINFORCING BARS			② A700 REINFORCING BARS			CONCRETE (CUBIC YARDS)
	NUMBER OF BARS	LENGTH OF EACH BAR	TOTAL WEIGHT IN POUNDS	NUMBER OF BARS	LENGTH OF EACH BAR	TOTAL WEIGHT IN POUNDS	
** 39'-0"	39	12'-9"	313	26	38'6"	2046	18.2

① CHANGE DIAMETER FROM 2'-6" TO 3'-6"
② CHANGE MAXIMUM SPACING TO 1'-6"

SEE STANDARD DRAWING T-SG-10 FOR OTHER DETAILS
** TO BE USED AT THE INTERSECTION OF SR-14 WITH BOLEN HUSE / OLD BROWNSVILLE ROAD.

SEALED BY
MICHAEL L. TUGWELL
STATE OF TENNESSEE
9/23/14

STATE OF TENNESSEE
DEPARTMENT OF TRANSPORTATION

ESTIMATED SIGNAL QUANTITIES

9/23/2014 9:30:56 AM
C:\Project Folders_Towles\SR14 STP-14(55)\Sheet 28_SR14_SignalQuantities.dgn

TYPE	YEAR	PROJECT NO.	SHEET NO.
CONST.	2014	STP-NH-14(23)	2C

INDEX

DESCRIPTION	SHT.
LIGHTING INDEX AND STANDARD DRAWINGS	2C
ESTIMATED LIGHTING QUANTITIES AND NOTES	2D
ELECTRICAL DETAILS (POWER SOURCE)	181
LIGHTING DETAILS (POLE DATA)	181A
LIGHTING DETAILS (WIRING DATA)	181B
LIGHTING LAYOUTS	181C –181F
LIGHTING DETAILS (LIGHTING ON SIGNAL POLE)	181G
LIGHTING DETAILS (MLGW STANDARDS)	181H- 181P

* * * INCLUDED FOR REVIEW PURPOSES ONLY * * *

* * * ALL ITEMS ON THIS SHEET TO BE INCORPORATED * * *
* * * INTO ROADWAY PLANS BY TDOT * * *

LIGHTING INDEX: SHSR14_Lighting_Index.doc

LIGHTING STANDARD DRAWINGS: SHSR14_Lighting_StdDwg.doc

DWG. NO	REV.	DESCRIPTION
TRAFFIC CONTROL APPURTENANCES		
T-L-1	12-04-13	STANDARD LIGHTING FOUNDATION DETAILS
T-L-1SA	09-11-13	STANDARD LIGHTING DETAILS FOR SINGLE ARM SUPPORTS
T-L-3	04-15-96	STANDARD LIGHTING DETAILS PULL BOXES
T-L-4	05-25-11	STANDARD LIGHTIINGDETAILS CONDUIT, CABLE INSTALLATION

SEALED BY

Brenda K. Booker

STATE OF TENNESSEE
DEPARTMENT OF TRANSPORTATION

LIGHTING INDEX AND STANDARD DRAWINGS

9/9/2014 5:58:46 PM
C:\Users\BE.Beo\Desktop\Booker\OL ACTIVE\TDOT\E616\SHELBY\06_SR 14 FROM SR 204 TO EGYPT LIGHTING\04_FINAL CONST DGN FILES\02C.sht

TYPE	YEAR	PROJECT NO.	SHEET NO.
CONST.	2014	STP-NH-14(23)	2D

ESTIMATED LIGHTING QUANTITIES

	ITEM NO.	DESCRIPTION	UNIT	QUANTITY
	714-03	JACKED OR BORED CONDUIT	L.F.	600
	714-03.01	DIRECT BURIAL CONDUIT (2" PVC, SCHEDULE 40)	L.F.	5660
	714-05.05	PULL BOXES (MEMPHIS STANDARD)	EACH	27
	714-06.06	CABLE (1/C # 4 AWG)	L.F.	18400
(1)	714-06.11	CABLE (# 4 SOLID COPPER SOFT DRAWN) (GROUND)	L.F.	630
	714-06.12	CABLE (# 4 COPPER SOFT DRAWN BARE) (GROUND)	L.F.	5945
	714-08.01	LIGHT STANDARDS (45' MLGW STANDARD)	EACH	26
(2)	714-08.20	FOUNDATION (ONLY) FOR LIGHT STANDARD	EACH	26
(3)	714-08.34	REMOVAL OF LIGHT STANDARD	EACH	11
(4)	714-09.10	LUMINAIRES (200 WATT HPS ROADWAY)	EACH	26
(5)	714-25	ELECTRICAL CONNECTION	EACH	1

PAY ITEM FOOTNOTES

(1) INCLUDED FOR GROUNDING WITHIN JACKED OR BORED, SHALL BE SOLID COPPER, COLORED GREEN AND HAVE USE-2 RUGGEDIZED INSULATION.

(2) SHALL BE CLASS 'A' CONCRETE FOUNDATION, SEE TDOT STD. DWG. T-L-1.

(3) INCLUDED FOR REMOVAL OF LIGHT STANDARDS, ARM, AND ROADWAY LUMINAIRES LOCATED ON S.R. 14 (AUSTIN PEAY HWY). ALSO, INCLUDES THE COST OF DISCONNECTING, PLUGGING AND ABANDONING CONDUIT AND WIRE BETWEEN REMOVED POLES.

(4) ROADWAY LUMINAIRE (COBRAHEAD) SHALL BE AMERICAN ELECTRIC ROADWAY SERIES 125, 200W CLEAR HPS WITH TYPE III, MEDIUM SEMI-CUTOFF DISTRIBUTION, DUAL-TAP 120/240 WIRED FOR 120V OPERATION, AMERICAN ELECTRIC CATALOGUE NO. 115 20S CT DT1 R3 DG 4B PB OP, OR EQUIVALENT. BASED ON AMERICAN ELECTRIC PHOTOMETRIC DATA FILE 115_25S_R3_DG.IES; TOTAL LUMENS=22,000. SHALL BE MLGW STOCK CODE 43-5805 (RUFFIN PART NO. J1130278). INCLUDES THE COST OF THE 15' ARM, THE PHOTOCELL, AND THE METAL WILDLIFE SHIELD #068-11-70912.

(5) THE CONTRACTOR SHALL CONTACT THE LOCAL UTILITY TO OBTAIN THE ESTIMATE FOR ANY CHARGES BY THE UTILITY FOR PROVIDING ELECTRICAL SERVICE. THESE CHARGES SHALL BE INCLUDED IN THE BID FOR THIS ITEM. ALSO, INCLUDES THE COST OF ALL APPURTENANCES FOR A COMPLETE SERVICE INSTALLATION INCLUDING TRANSFORMER, RISER, AND THE 60 AMP DISCONNECT AS REQUIRED.

LIGHTING NOTES

(1) INSTALLATION AND MATERIALS SHALL COMPLY WITH SECTIONS 714 AND 917 OF THE TENNESSEE DEPARTMENT OF TRANSPORTATION STANDARD SPECIFICATIONS FOR ROAD AND BRIDGE CONSTRUCTION DATED MARCH 1, 2006 AND WITH THE LATEST REVISIONS TO THE NATIONAL ELECTRIC CODE, NFPA 70.

(2) ALL INCIDENTAL EQUIPMENT AND MATERIAL REQUIRED FOR THE SUCCESSFUL EXECUTION OF THIS WORK SHALL BE FURNISHED IN 714 ITEMS WHETHER SPECIFICALLY NOTED OR NOT.

(3) STANDARDS SHALL BE DESIGNED IN ACCORDANCE WITH THE REQUIREMENTS OF THE LATEST EDITION OF THE STANDARD SPECIFICATIONS FOR STRUCTURAL SUPPORT FOR HIGHWAY SIGNS, LUMINARIES AND TRAFFIC SIGNALS PUBLISHED BY THE AMERICAN ASSOCIATION OF STATE HIGHWAY AND TRANSPORTATION OFFICIALS.

SPECIAL LIGHTING NOTES

(4) REFER TO TDOT STANDARD SPECIFICATION 714M.

(5) ALL CONDUIT SHALL BE SCHEDULE 40 PVC UNLESS OTHERWISE NOTED IN THE PLANS.

(6) CONDUIT AT ROADWAY AND DRIVEWAY CROSSINGS SHALL BE JACK AND BORED. THE CONTRACTOR SHALL INSTALL THE CABLES AND GROUND WIRE IN THE JACK AND BORED CONDUIT AT THESE LOCATIONS.

(7) FOR JACK AND BORE, USE ONLY POLYETHYLENE PIPE. NO SEAMS ARE PERMITTED. CONTRACTOR SHALL USE POLYETHYLENE PIPE ADHESIVE AT JUNCTIONS.

(8) CABLES FOR STREET LIGHTING SHALL BE INSTALLED IN CONDUIT AND PULL BOXES INDEPENDENT OF ANY OTHER SYSTEM.

(9) LIGHTING PULL BOXES SHALL BE LABELED 'STREET LIGHTING'.

(10) ALL PROPOSED LUMINAIRES SHALL BE BALLASTED FOR 120 V OPERATION.

(11) THE PHOTOCELL SHALL BE AMERICAN ELECTRIC, DARK TO LIGHT (DTL), D SERIES, PHOTOCELL D120-1.0-1741, OR EQUIVALENT.

(12) ALL LIGHT POLES SHALL HAVE CONCRETE FOUNDATIONS AND BREAK-AWAY COUPLINGS. NO TRANSFORMER BASES WILL BE PERMITTED. NO SCREW-IN FOUNDATIONS SHALL BE ALLOWED IN NEW FILL AREA. CONTRACTOR MAY USE SCREW-IN TYPE FOUNDATIONS WHERE NO NEW FILL IS PLACED WITH THE CONSENT OF THE ENGINEER.

(13) ALL LIGHT POLES SHALL BE INSTALLED WITH THE HAND HOLE ON THE DOWNSTREAM SIDE OF TRAFFIC SO THAT WORKERS ARE FACING ONCOMING TRAFFIC.

(14) POLES MAY BE ADJUSTED 5'. ANY ADJUSTMENT GREATER THAN 5' SHALL BE APPROVED BY THE ENGINEER.

(15) SOME UTILITIES MAY REQUIRE LOCATION BY HAND DIGGING PRIOR TO PROPOSED LIGHT POLE INSTALLATION.

(16) SALVAGEABLE EQUIPMENT SHALL BE STOCKPILED ON THE JOBSITE FOR PICK UP BY MLGW, CONTRACTOR SHALL CONTACT DANIEL LACKEY, MLGW, (901)528-4211, FOR PICKUP.

(17) FINAL LOCATION OF POWER SOURCE WILL BE CONFIRMED PRIOR TO CONSTRUCTION.

(18) CONTRACTOR SHALL ENSURE THE EXISTING LIGHTING SYSTEM REMAINS ENERGIZED DURING ALL PHASES OF CONSTRUCTION.

(19) THE CONTRACTOR SHALL ENSURE THAT ANY LUMINAIRE THAT REMAINS IN PLACE REMAINS ENERGIZED.

(20) A STANDARD MLGW 38' STEEL MONOTUBE POLE SHALL BE INSTALLED AT ALL LOCATIONS. REFER TO MLGW STANDARDS ON SHEETS 181N.

(21) A STANDARD MLGW 15' ARM AND 7' RISE SHALL BE USED WITH THE ROADWAY LUMINAIRES (COBRAHEAD). REFER TO MLGW STANDARD ON SHEETS 181L.

(22) FOR MLGW WIRING DESIGN CRITERIA, SEE SHEET 181B.

GROUND RODS NOTE

(23) USE TWO (2) 5/8" X 8' COPPER PLATED GROUND RODS JOINED END TO END, USING A THREADLESS GROUND ROD COUPLING, EMBEDDED IN THE GROUND FOR EACH GALVANIZED STEEL LIGHT POLE. EQUIPMENT BEING GROUNDED SHALL BE BONDED TO THE GROUND RODS USING A #4 SOLID BARE COPPER WIRE AND A 5/8" THREADLESS GROUND ROD CLAMP. (SEE SHEET 181P)

SEALED BY

Brenda K. Booker

STATE OF TENNESSEE
DEPARTMENT OF TRANSPORTATION

ESTIMATED LIGHTING QUANTITIES AND NOTES

9/9/2014 5:52:48 PM
C:\Users\BE.Beo\Desktop\Booker\OLACTIVE\TDOT\E616\SHELBY\06_SR 14 FROM SR 204 TO EGYPT LIGHTING\04-FINAL CONST DGN FILES\020.sht

TYPE	YEAR	PROJECT NO.	SHEET NO.
CONST.	2015	NH-14(55)	180

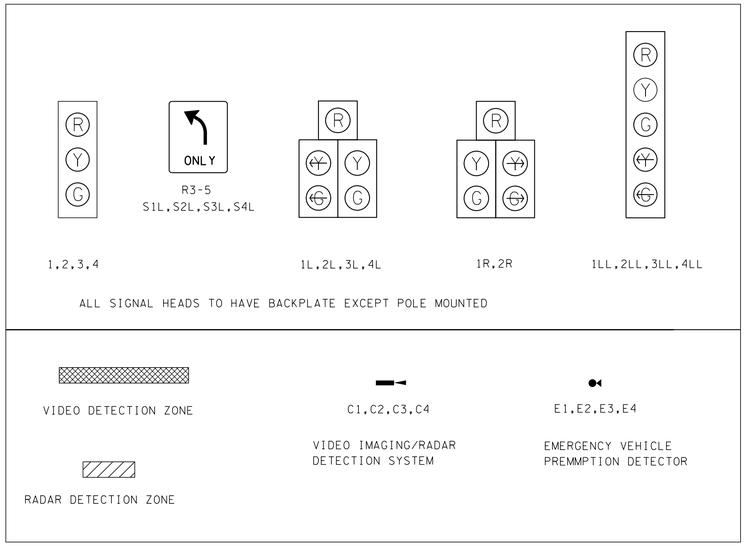

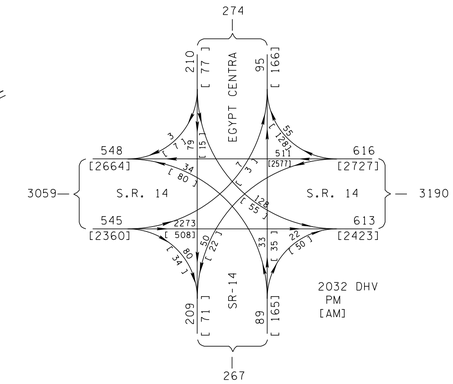

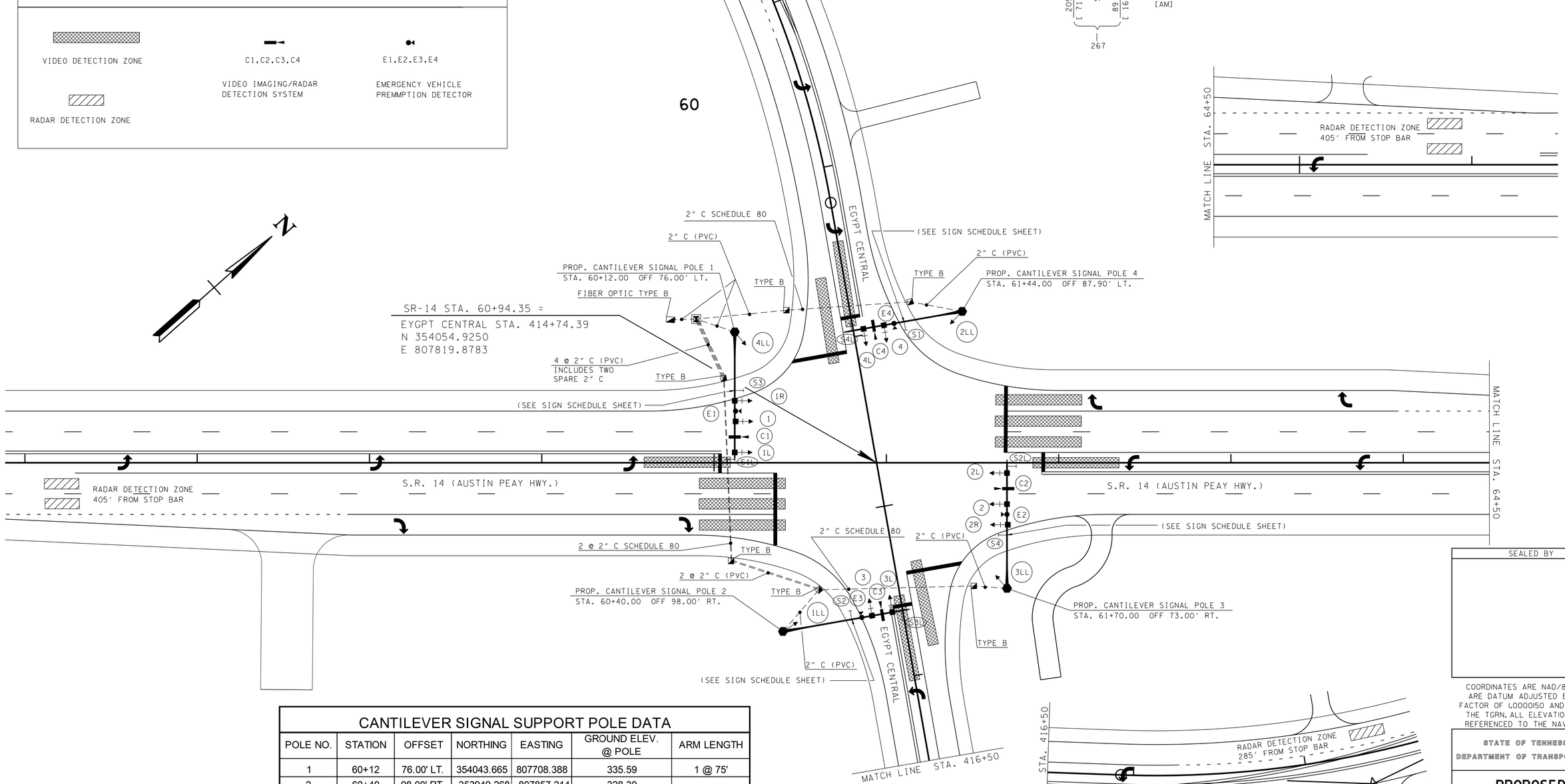

CANTILEVER SIGNAL SUPPORT POLE DATA						
POLE NO.	STATION	OFFSET	NORTHING	EASTING	GROUND ELEV. @ POLE	ARM LENGTH
1	60+12	76.00' LT.	354043.665	807708.388	335.59	1 @ 75'
2	60+40	98.00' RT.	353949.268	807857.214	328.30	1 @ 75'
3	61+70	73.00' RT.	354063.164	807924.686	329.92	1 @ 75'
4	61+44	87.90' LT.	354150.374	807786.994	331.97	1 @ 70'

NOTE: POLE LENGTHS MUST BE FIELD VERIED PRIOR TO FABRICATION.

SEALED BY

COORDINATES ARE NAD/83(1995), ARE DATUM ADJUSTED BY THE FACTOR OF 1.0000150 AND TIED TO THE TGRN. ALL ELEVATIONS ARE REFERENCED TO THE NAVD 1988.

STATE OF TENNESSEE
DEPARTMENT OF TRANSPORTATION

PROPOSED SIGNAL LAYOUT
INTERSECTION OF S.R. 14 WITH EGYPT CENTRAL ROAD

SCALE: 1"=30 '

9/23/2014 9:45:29 AM
C:\Project Folders\Towles\SR14 STP-14(55)\Sheet 180 Egypt CentralRoad.dgn

TYPE	YEAR	PROJECT NO.	SHEET NO.
CONST.	2015	NH-14(55)	180A

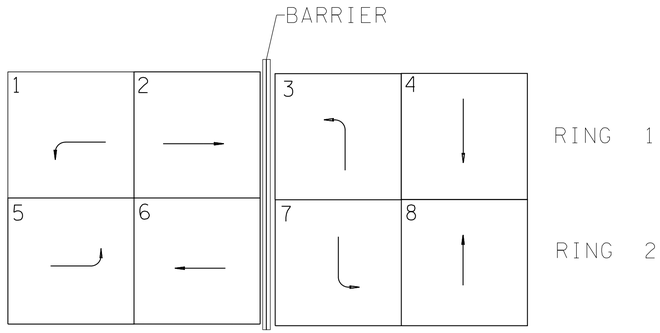

SIGNAL TIMING IS TO BE DONE BY THE CITY OF MEMPHIS. THE CONTRACTOR SHALL CONTACT MR. MANOOCHEHR TANHAEE AT (901)576-6710 A MINIMUM OF THIRTY (30) DAYS PRIOR TO ACTIVATION OF THE SIGNAL TO OBTAIN THE INITIAL SIGNAL TIMINGS.

NEMA EIGHT PHASE DESIGNATIONS

ACTIVE PHASE

INACTIVE PHASE (NOT USED)

- OPERATION IS DUAL ENTRY MODE, FULL SKIP CAPABILITY
- SINGLE DIRECTION, LAGGING LEFT TURN PHASES ARE NOT ALLOWED
- ALL SIGNAL DISPLAYS AND CLEARANCES SHALL BE IN ACCORDANCE WITH THE MANUAL ON UNIFORM TRAFFIC CONTROL DEVICES

VIDEO IMAGING AND RADAR DETECTION TARGET ASSIGNMENTS

TARGET AREA NUMBER	CAMERA NUMBER	TARGET AREA (FT.)	ASSOCIATE PHASE	COMMENTS
1-1	C1	1 @ 6' x 50'	1	VIDEO DETECTION
2-1	C2	2 @ 6' X 20'	2	RADAR DETECTION
2-2	C2	2 @ 6' X 50'	2	VIDEO DETECTION
2-3	C2	1 @ 6' X 50'	2	VIDEO DETECTION
3-1	C4	1 @ 6' X 50'	3	VIDEO DETECTION
4-1	C3	1 @ 6' x 20'	4	RADAR DETECTION
4-2	C3	1 @ 6' X 50'	4	VIDEO DETECTION
5-1	C2	1 @ 6' X 50'	5	VIDEO DETECTION
6-1	C1	2 @ 6' X 20'	6	RADAR DETECTION
6-2	C1	2 @ 6' X 50'	6	VIDEO DETECTION
6-3	C1	1 @ 6' X 50'	6	VIDEO DETECTION
7-1	C3	1 @ 6' X 50'	7	VIDEO DETECTION
8-1	C4	1 @ 6' X 20'	8	RADAR DETECTION
8-2	C4	1 @ 6' X 50'	8	VIDEO DETECTION

DETECTION ZONE DIAGRAM

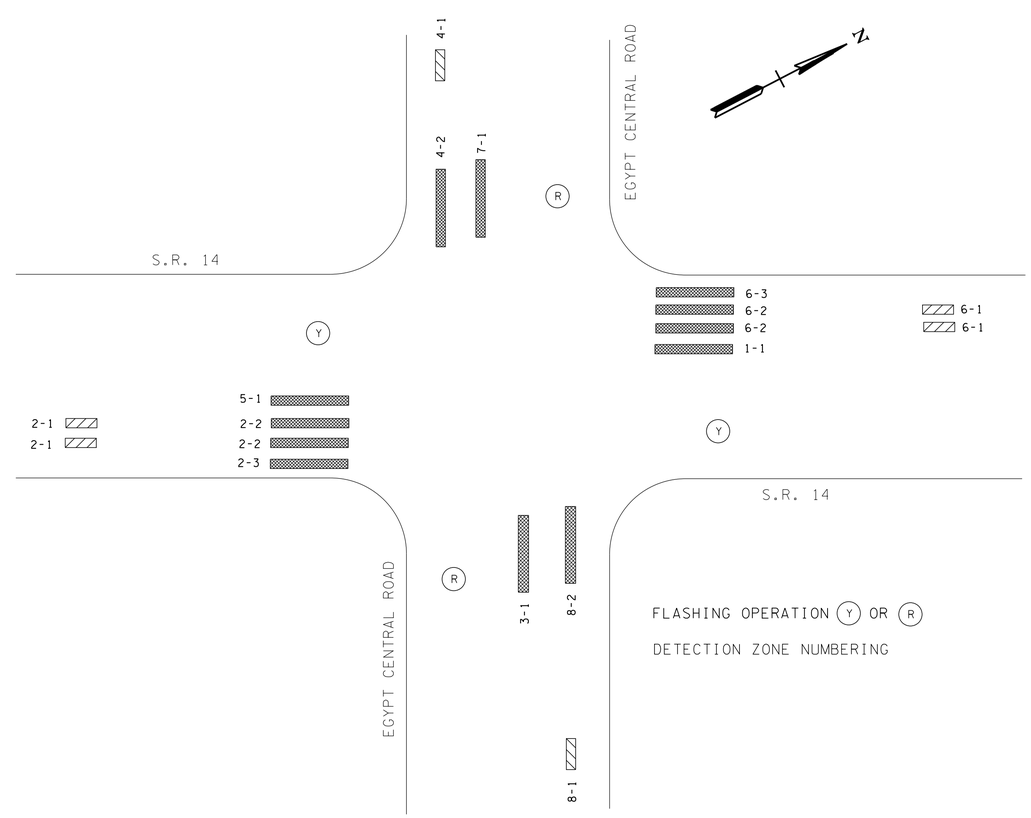

SEALED BY

INTERSECTION OF EGYPT CENTRAL ROAD WITH S.R.14

STATE OF TENNESSEE
DEPARTMENT OF TRANSPORTATION

PHASING, TIMING, DETECTOR ASSIGNMENT

EIGHT PHASE

9/23/2014 9:37:42 AM
C:\Project Folders_Towles\SR14 STP-14(55)\Sheet 180A_Phasing_SR14@Egypt.dgn

TYPE	YEAR	PROJECT NO.	SHEET NO.
CONST.	2015	NH-14(55)	180B

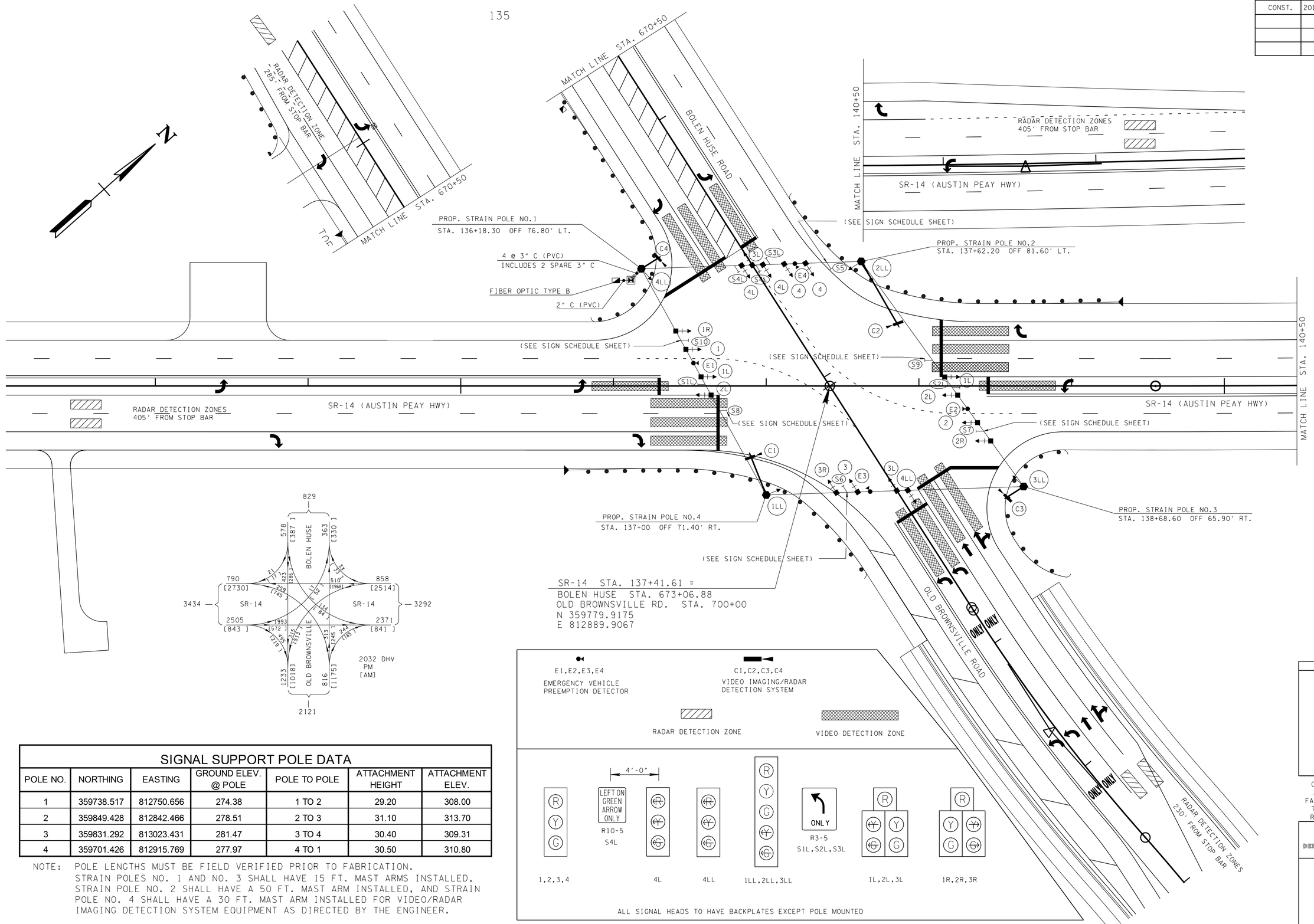

SIGNAL SUPPORT POLE DATA

POLE NO.	NORTHING	EASTING	GROUND ELEV. @ POLE	POLE TO POLE	ATTACHMENT HEIGHT	ATTACHMENT ELEV.
1	359738.517	812750.656	274.38	1 TO 2	29.20	308.00
2	359849.428	812842.466	278.51	2 TO 3	31.10	313.70
3	359831.292	813023.431	281.47	3 TO 4	30.40	309.31
4	359701.426	812915.769	277.97	4 TO 1	30.50	310.80

NOTE: POLE LENGTHS MUST BE FIELD VERIFIED PRIOR TO FABRICATION. STRAIN POLES NO. 1 AND NO. 3 SHALL HAVE 15 FT. MAST ARMS INSTALLED, STRAIN POLE NO. 2 SHALL HAVE A 50 FT. MAST ARM INSTALLED, AND STRAIN POLE NO. 4 SHALL HAVE A 30 FT. MAST ARM INSTALLED FOR VIDEO/RADAR IMAGING DETECTION SYSTEM EQUIPMENT AS DIRECTED BY THE ENGINEER.

SEALED BY

COORDINATES ARE NAD/83(1995), ARE DATUM ADJUSTED BY THE FACTOR OF 1.0000150 AND TIED TO THE TGRN. ALL ELEVATIONS ARE REFERENCED TO THE NAVD 1988.

STATE OF TENNESSEE
DEPARTMENT OF TRANSPORTATION

PROPOSED SIGNAL LAYOUT

INTERSECTION OF SR-14 WITH BOLEN HUSE ROAD

SCALE: 1"=30 '

9/23/2014 9:38:50 AM
C:\Project Folders_Towles\SR14 STP-14(55)\Sheet 180B_Signal_SR14@BolenHuse.dgn

TYPE	YEAR	PROJECT NO.	SHEET NO.
CONST.	2015	NH-14(55)	180C

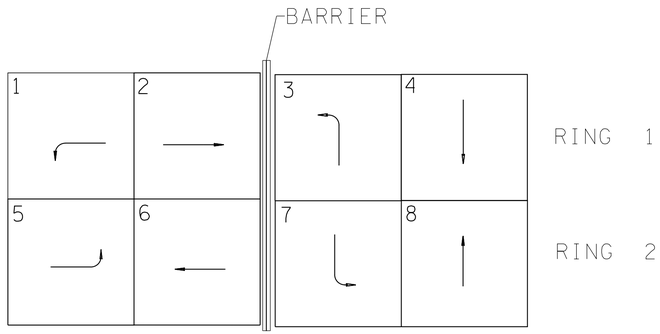

SIGNAL TIMING IS TO BE DONE BY THE SHELBY COUNTY ENGINEERING DEPARTMENT. THE CONTRACTOR SHALL CONTACT MR. BOB EVANS AT (901)222-7742 A MINIMUM OF THIRTY (30) DAYS PRIOR TO ACTIVATION OF THE SIGNAL TO OBTAIN THE INITIAL SIGNAL TIMINGS.

NEMA EIGHT PHASE DESIGNATIONS

ACTIVE PHASE

INACTIVE PHASE (NOT USED)

- OPERATION IS DUAL ENTRY MODE, FULL SKIP CAPABILITY
- SINGLE DIRECTION, LAGGING LEFT TURN PHASES ARE NOT ALLOWED
- ALL SIGNAL DISPLAYS AND CLEARANCES SHALL BE IN ACCORDANCE WITH THE MANUAL ON UNIFORM TRAFFIC CONTROL DEVICES

VIDEO IMAGING AND RADAR DETECTION TARGET ASSIGNMENTS

TARGET AREA NUMBER	CAMERA NUMBER	TARGET AREA (FT.)	ASSOCIATE PHASE	COMMENTS
1-1	C1	1 @ 6' x 50'	1	VIDEO DETECTION
2-1	C2	2 @ 6' X 20'	2	RADAR DETECTION
2-2	C2	2 @ 6' X 50'	2	VIDEO DETECTION
2-3	C2	1 @ 6' X 50'	2	VIDEO DETECTION
3-1	C4	2 @ 6' X 50'	3	VIDEO DETECTION
4-1	C3	1 @ 6' x 20'	4	RADAR DETECTION
4-2	C3	1 @ 6' X 50'	4	VIDEO DETECTION
4-3	C3	1 @ 6' X 50'	5	VIDEO DETECTION
5-1	C2	1 @ 6' X 50'	6	VIDEO DETECTION
6-1	C1	2 @ 6' X 20'	6	RADAR DETECTION
6-2	C1	2 @ 6' X 50'	6	VIDEO DETECTION
6-3	C1	1 @ 6' X 50'	7	VIDEO DETECTION
7-1	C3	1 @ 6' X 50'	8	VIDEO DETECTION
8-1	C4	1 @ 6' X 20'	8	RADAR DETECTION
8-2	C4	2 @ 6' X 50'	8	VIDEO DETECTION

DETECTION ZONE DIAGRAM

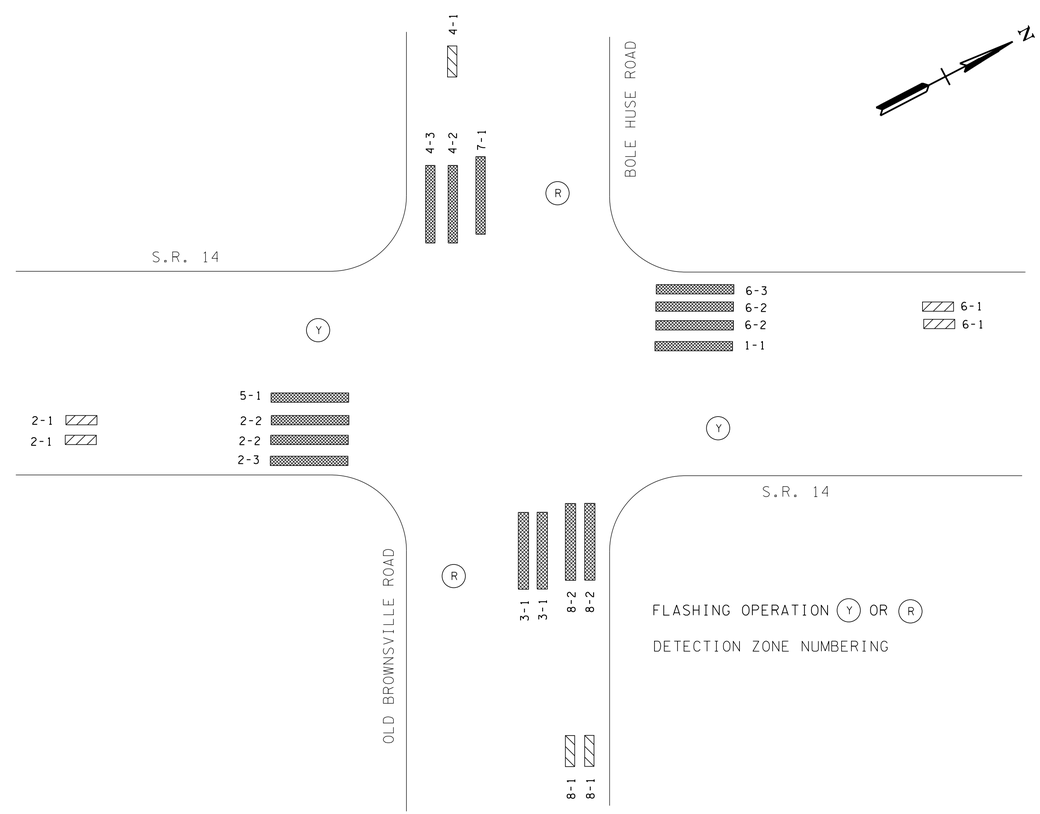

FLASHING OPERATION (Y) OR (R)

DETECTION ZONE NUMBERING

SEALED BY

INTERSECTION OF BOLEN HUSE/OLD BROWNSVILLE ROAD WITH S.R.14

STATE OF TENNESSEE
DEPARTMENT OF TRANSPORTATION

PHASING, TIMING, DETECTOR ASSIGNMENT

EIGHT PHASE

9/23/2014 9:40:07 AM
C:\Project Folders_Towles\SR14 STP-14(55)\Sheet 180C_Phasing_SR14@BolenHuse.dgn

TYPE	YEAR	PROJECT NO.	SHEET NO.
CONST.	2014	STP-NH-14(23)	181P

DETAIL 'A'
CONDUIT INSTALLATION INSIDE LIGHTING PULL BOX
(SECONDARY STREET LIGHT PULL BOX NO GROUND ROD UNDERGROUND)
(NTS)

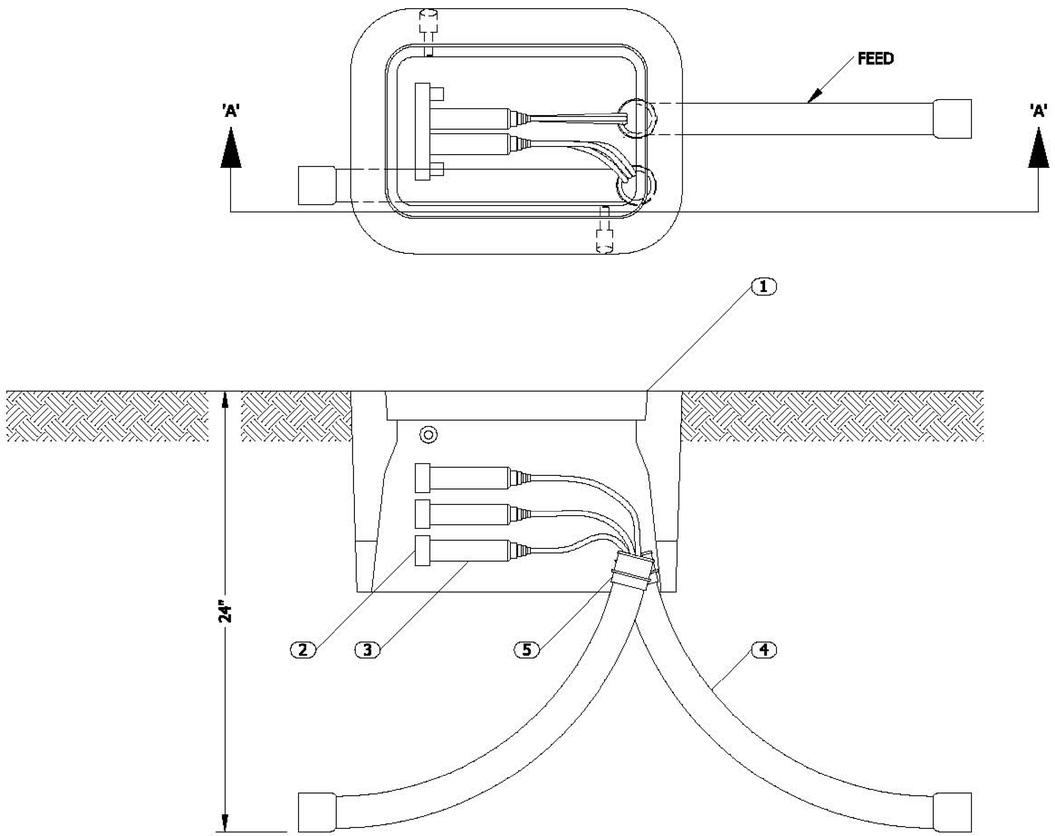

SECTION A - A

1. HANDHOLE W/COVER SMALL STREET LIGHT
   MLGW ITEM NO: 41-0250, HANDHOLE W/COVER ELECTRIC STREET LIGHT CONCRETE
2. MOLE 4 WAY STREET LIGHT
   MLGW ITEM NO: 38-0980, MOLE URD 4 OUTLETS 350KCM-#12 350A 600V
3. TAP KIT W/SLV #6 STRD AL - #4 SOL CU SL
   MLGW ITEM NO: 38-1400, TAP KIT #4 SOL CU-#6 STRD AL W/SLV FOR URD MOLE
4. BEND 1-1/2" 90 DEG 18" RAD PVC SL
   MLGW ITEM NO: 38-2457, BEND PVC 1-1/2" 90DEG 18"RAD TC2 EPC40-PE X BE
5. END BELL 1-1/2 PVC SL
   MLGW ITEM NO: 38-3467, END BELL PVC 1-1/2" TC3 EPC40-SLIP
   MLGW ITEM NO: 55-4205, CEMENT W/APPLICATOR PVC SOLVENT 1QT CAN
   MLGW ITEM NO: 55-4520, CLEANER PVC CONDUIT AND FITTINGS

GENERAL NOTES

(A) THE INFORMATION PROVIDED IN THIS STANDARD DRAWING IS EQUIVALENT TO MLGW STANDARD DRAWING 770.30. BASED ON MLGW ITEM NUMBERS 41-0250, 38-0980, 38-1400, 38-2457, 38-3467, 55-4205, AND 55-4520.

DETAIL 'B'
GROUNDING INSTALLATION DETAILS
(NTS)

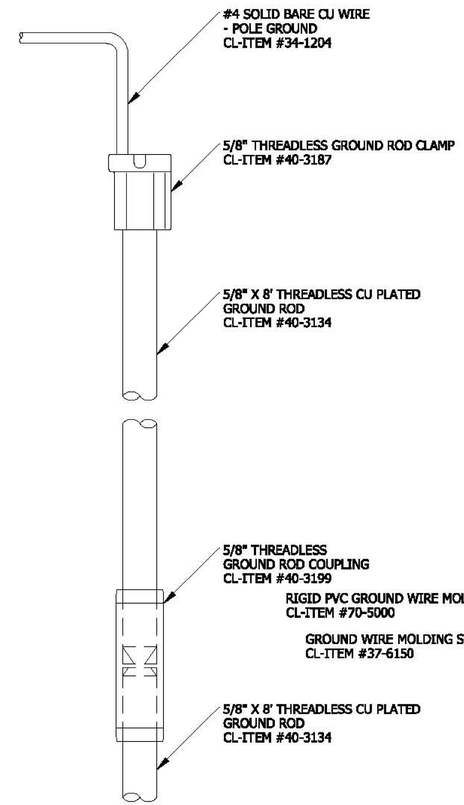

DETAIL 'B-A'
GROUND ASSEMBLY

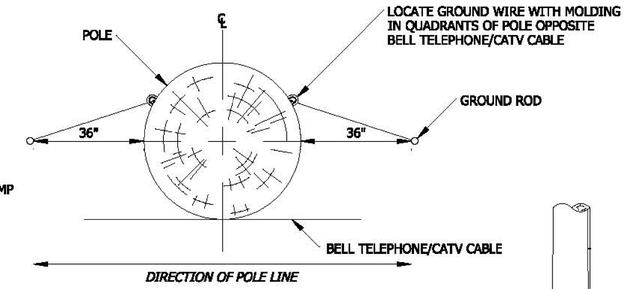

LOCATION OF POLE GROUND

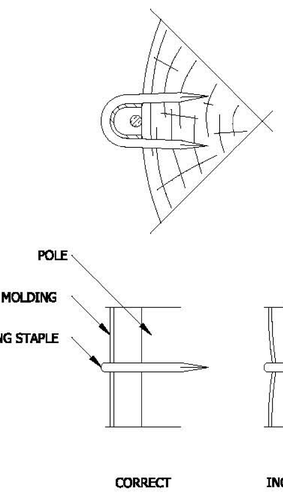

DETAIL 'B-B'
METHOD OF STAPLING
MOLDING TO POLE

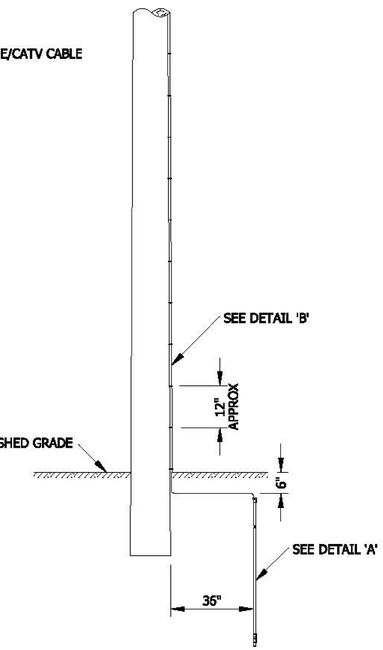

DETAIL 'B-C'
POLE GROUND

1. GROUND WIRE MOLDING STAPLES SHALL BE SPACED APPROXIMATELY 12" APART AND DRIVEN UNTIL IT TOUCHES THE RIGID PVC OR RE GROUND WIRE MOLDING; DRIVING STAPLE TOO FAR WILL DEFORM THE MOLDING, SEE DETAIL 'B'.
2. GROUND ROD AND WIRE SHALL BE PLACED ON THE PROPERTY SIDE OF THE POLE, WHEN POSSIBLE.
3. IT IS VERY IMPORTANT TO NOTE THAT TO PREVENT RADIO INTERFERENCE, STAPLES SHALL BE DRIVEN OVER THE MOLDING EXCEPT WHERE THE TOP AND BOTTOM STAPLES ARE USED TO STRAIGHTEN AND POSITION THE FULL LENGTH OF THE GROUND WIRE PRIOR TO ATTACHING THE MOLDING; THE TOP STAPLE SHALL BE AT LEAST SIX INCHES FROM ANY POLE LINE HARDWARE.
4. MLGW ITEM NO: 34-1204, #4 SOLID BARE COPPER WIRE - POLE GROUND
   MLGW ITEM NO: 40-3187, 5/8" THREADLESS GROUND ROD CLAMP
   MLGW ITEM NO: 40-3134, 5/8" X 8' THREADLESS COPPER PLATED GROUND ROD
   MLGW ITEM NO: 40-3199, 5/8" THREADLESS GROUND ROD COUPLING
   MLGW ITEM NO: 70-5000, RIGID PVC GROUND WIRE MOLDING
   MLGW ITEM NO: 37-6150, GROUND WIRE MOLDING STAPLE

GENERAL NOTES

(A) THE INFORMATION PROVIDED IN THIS STANDARD DRAWING IS EQUIVALENT TO MLGW STANDARD DRAWING 103.01. BASED ON MLGW ITEM NUMBERS 34-1204, 40-3187, 40-3134, 40-3199, 70-5000, AND 37-6150.

SEALED BY

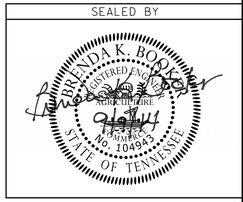

STATE OF TENNESSEE
DEPARTMENT OF TRANSPORTATION

LIGHTING DETAILS

(MLGW STANDARDS)

9/9/2014 5:44:21PM
C:\Users\BE-Beo\Desktop\Booker\01_ACTIVE\TDOT\EI6I6\SHELBY\06_SR 14 FROM SR 204 TO EGYPT LIGHTING\04_FINAL CONST DGN FILES\181P.sht

TYPE	YEAR	PROJECT NO.	SHEET NO.
CONST.	2014	STP-NH-14(23)	181N

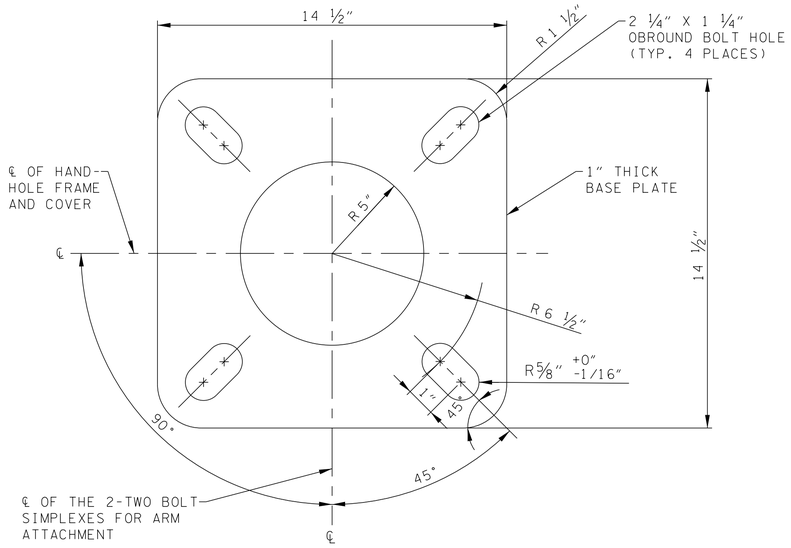

DETAIL 'A'
BASE PLATE/LOCATIONS FOR HANDHOLE AND 2-TWO BOLT SIMPLEXES FOR ARM ATTACHMENT
N.T.S.

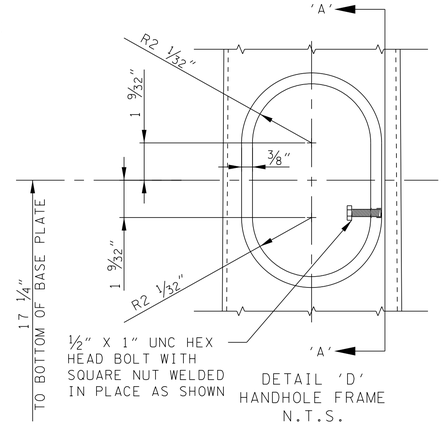

DETAIL 'D'
HANDHOLE FRAME
N.T.S.

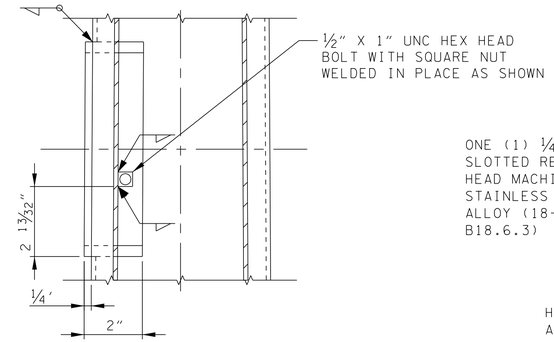

SECTION 'A' - 'A'
N.T.S.

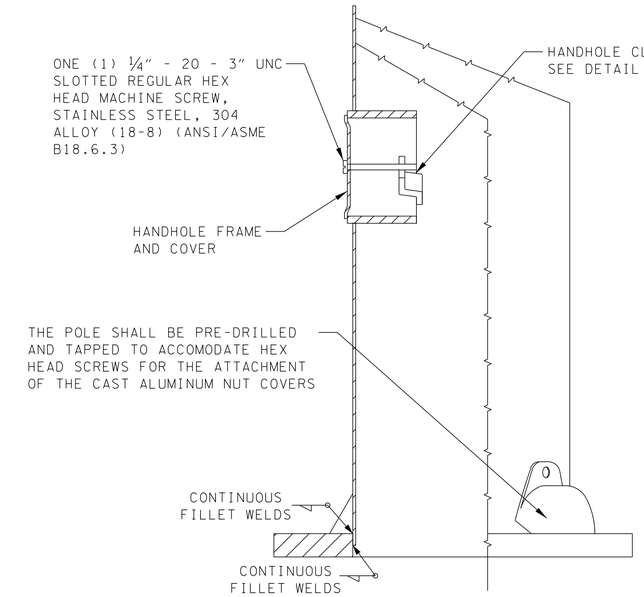

DETAIL 'B'
SECTION/SIDE VIEW
N.T.S.

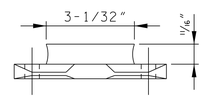

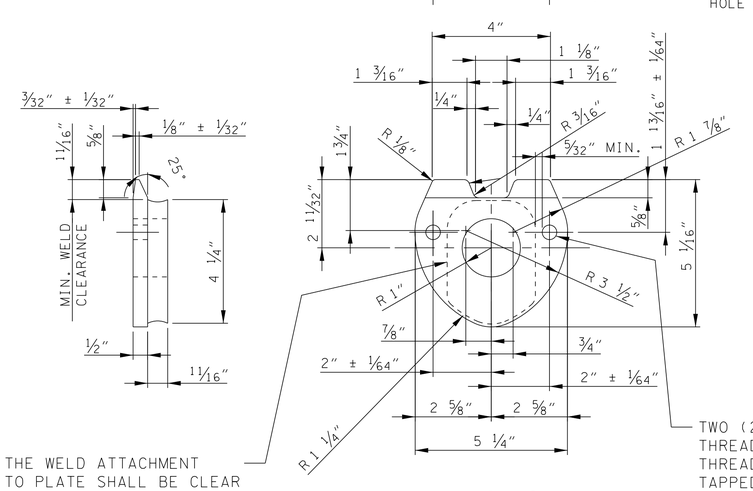

DETAIL 'G'
TWO BOLT SIMPLEX FOR ARM ATTACHMENT
N.T.S.

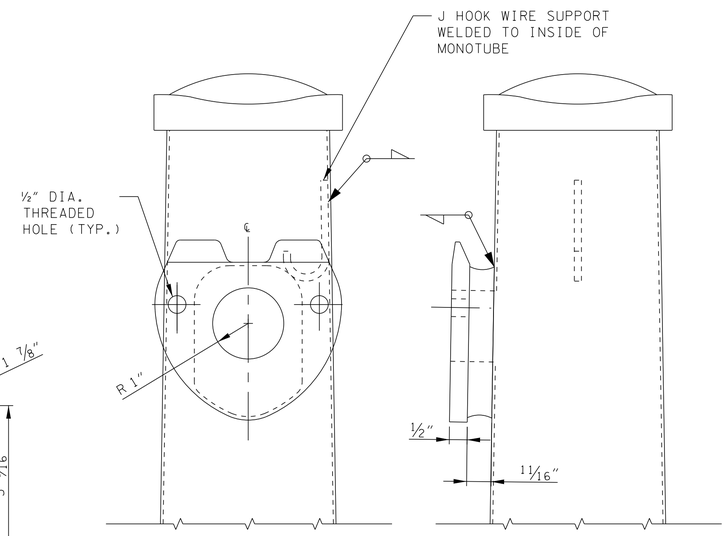

DETAIL 'C'
TWO BOLT SIMPLEX FOR ARM ATTACHMENT AND J-HOOK
N.T.S.

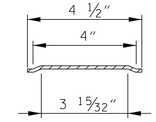

SECTION 'C' - 'C'
N.T.S.

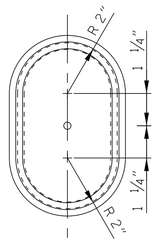

REAR VIEW

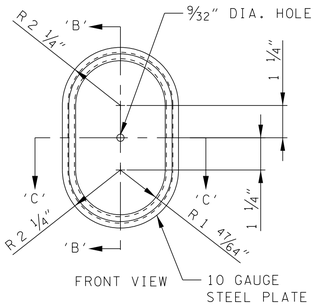

FRONT VIEW

DETAIL 'F'
HANDHOLE COVER
N.T.S.

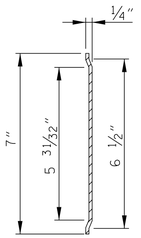

SECTION 'B' - 'B'
N.T.S.

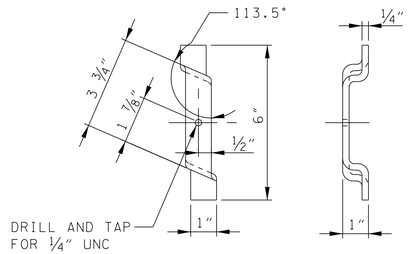

DETAIL 'E'
HANDHOLE COVER CLAMP
N.T.S.

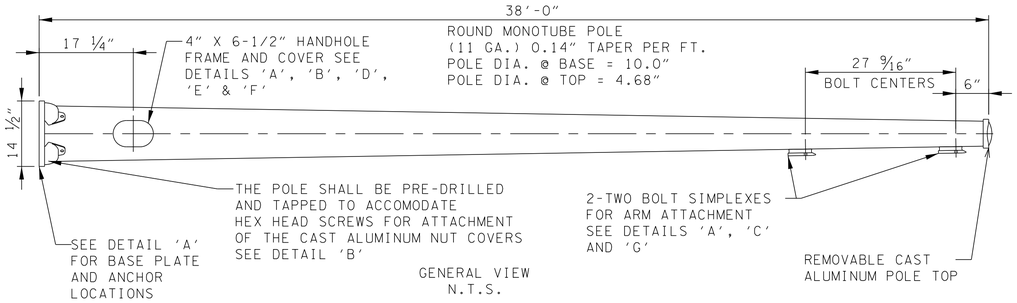

GENERAL VIEW
N.T.S.

MATERIAL SPECIFICATIONS	
MONOTUBE	ASTM - A 595 GRADE A
PLATE AND BAR	ASTM - A 36
POLE TOP & NUT COVERS	ASTM - B 26 (356 OR 43 ALLOY)
ANCHOR BOLTS	ASTM - A 675 GRADE 90
STRUCTURE FINISH	GALVANIZE TO ASTM - A 123
HARDWARE FINISH	GALVANIZE TO ASTM - A 153

GENERAL NOTES

(A) THE INFORMATION PROVIDED IN THIS STANDARD DRAWING IS EQUIVALENT TO MLGW STANDARD DRAWING 43-8638.

THIRTY-EIGHT FOOT GALVANIZED STEEL EXPRESSWAY LIGHTING POLE WITH SINGLE ARM ATTACHEMENTS

SEALED BY

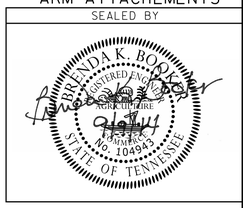

STATE OF TENNESSEE
DEPARTMENT OF TRANSPORTATION

LIGHTING DETAILS

(MLGW STANDARDS)

9/9/2014 5:41:33 PM
C:\Users\BE-Beo\Desktop\Booker\01_ACTIVE\TDOT\E1616\SHELBY\06_SR 14 FROM SR 204 TO EGYPT LIGHTING\04_FINAL CONST DGN FILES\181N.sht

TYPE	YEAR	PROJECT NO.	SHEET NO.
CONST.	2014	STP-NH-14(23)	181M

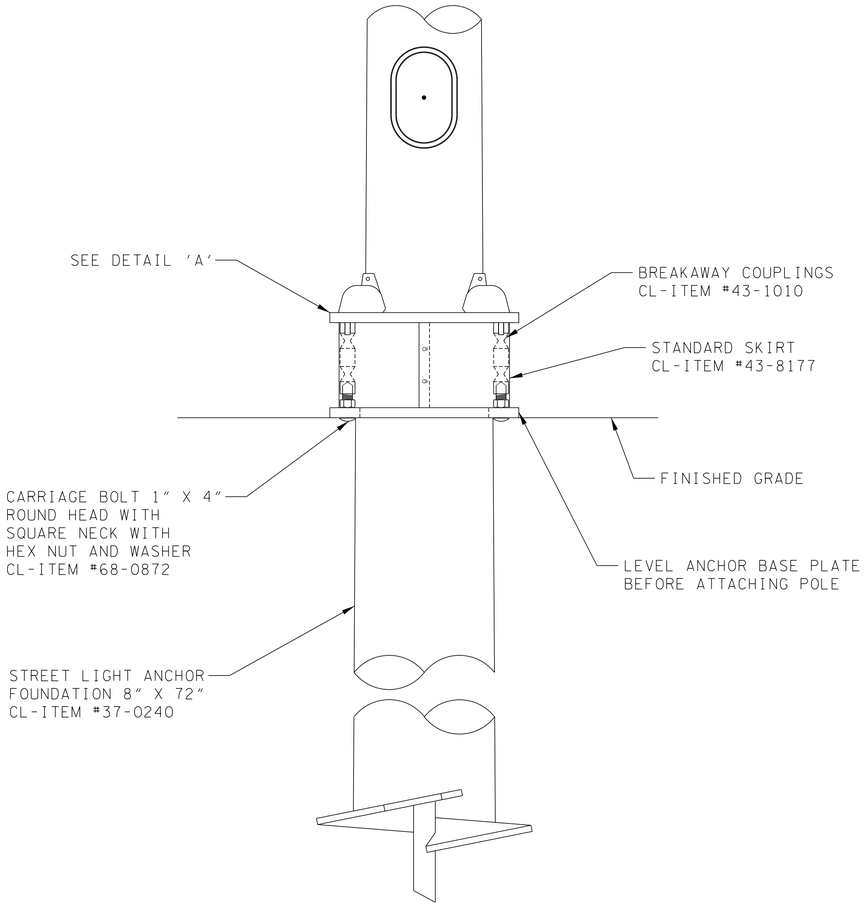

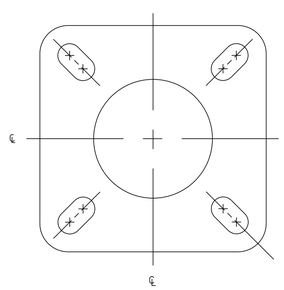

DETAIL 'A'
BASE PLATE OF POLE
N.T.S.

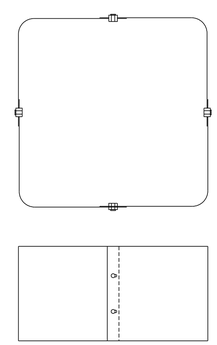

DETAIL 'B'
FRONT VIEW STANDARD SKIRT

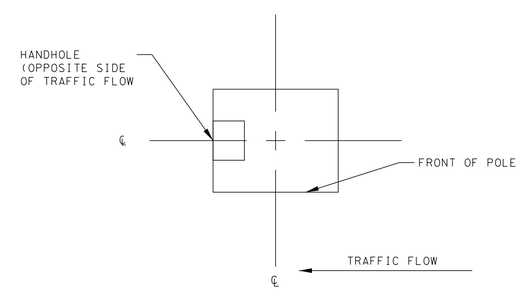

DETAIL 'D'

GALVANIZED STEEL
POLE INSTALLATION
WITH BREAKAWAY
COUPLINGS

SEALED BY

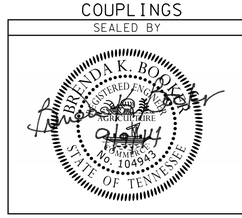

GENERAL NOTES

(A) THE INFORMATION PROVIDED IN THIS STANDARD IS TO SHOW THE RELATIONSHIP OF THE VARIOUS COMPONENTS OF A GALVANIZED STEEL POLE INSTALLATION WITH BREAKAWAY COUPLINGS AND IS A COMPILATION OF MLGW MATERIAL CLASS & ITEM NUMBERS 43-1010, 43-8177, 68-0872 & 37-0240.

STATE OF TENNESSEE
DEPARTMENT OF TRANSPORTATION

LIGHTING DETAILS

(MLGW STANDARDS)

9/9/2014 5:40:30 PM
C:\Users\BE-Beo\Desktop\Booker\01_ACTIVE\TDOT\E1616\SHELBY\06_SR 14 FROM SR 204 TO EGYPT LIGHTING\04_FINAL CONST DGN FILES\181M.sht

TYPE	YEAR	PROJECT NO.	SHEET NO.
CONST.	2014	STP-NH-14(23)	181L

SPECIFICATIONS

MATERIAL: THE BRACKET SHALL BE MADE OF 2" NOMINAL PIPE SIZE, SCHEDULE NO. 40 STEEL PIPE, TYPE S OR E, GRADE A IN ACCORDANCE WITH ASTM DESIGNATION: A 53, "STANDARD SPECIFICATION FOR PIPE, STEEL, BLACK AND HOT-DIPPED, ZINC COATED WELDED AND SEAMLESS" AS LAST REVISED. THE 3/8" X 2" AND 3/8" X 1" X 3" BAR STRUTS AND 3/8" X 5 1/4" SIMPLEX ATTACHMENTS SHALL BE MADE OF HOT-WROUGHT SPECIAL QUALITY CARBON STEEL BAR AND SHALL MEET OR EXCEED THE REQUIREMENTS OF ASTM DESIGNATION: A 576, "STANDARD SPECIFICATION FOR STEEL BARS, CARBON, HOT-WROUGHT, SPECIAL QUALITY" AS LAST REVISED. ONE (1) SOLID (BLIND & PLUG) RUBBER OR NEPRENE GROMMET HAVING A FULL MEMBRANE FOR A 1" DIA. HOLE WITH A 1 1/2" OUTSIDE DIAMETER.

TOLERANCE: ALL TOLERANCES SHALL BE ±1/16" UNLESS OTHERWISE SPECIFIED.

FABRICATION: ALL WELDS SHALL MEET OR EXCEED ANSI/AWS D1.1 "STRUCTURAL WELDING-CODE STEEL", SECTION 9.25 AS TO THE QUALITY OF WELDS. THE WELD STRENGTH SHALL BE EQUAL TO OR GREATER THAN THE MATERIAL BEING WELDED.

FINISH: AFTER FABRICATION, THE BRACKET SHALL BE COMPLETELY DIPPED IN A PROTECTIVE ZINC COATING APPLIED IN ACCORDANCE WITH ASTM DESIGNATION: A 123, "STANDARD SPECIFIATION FOR ZINC (HOT-DIP GALVANIZED) COATINGS ON IRON AND STEEL PRODUCTS" AS LAST REVISED.

HARDWARE: THE BRACKET HARDWARE SHALL CONSIST OF FOUR (4) 1/2" - 13 X 1 1/2" UNC FINISHED HEX BOLTS, STAINLESS STEEL 304 ALLOY (18-8) (ANSI/ASME B18.2.1), FOUR (4) 1/2" SAE DESIGNATE NARROW "N" TYPE A PLAIN WASHERS, STAINLESS STEEL 304 ALLOY (18-8) (ANSI/ASME B18.22.1) AND FOUR (4) 1/2" REGULAR HELICAL SPRING LOCK WASHERS, STAINLESS STEEL 304 ALLOY (18-8) (ANSI/ASME B 18.21.1).

CERTIFICATION: A CERTIFIED HEAT LOT TEST REPORT SHALL BE FURNISHED COVERING THE MATERIAL USED IN EACH BRACKET. ALL WELDS SHALL BE TESTED FOR PENETRATION AND A CERTIFIED WELD TEST REPORT SHALL BE FURNISHED.

SHIPPING: THE HARDWARE SHALL BE PACKAGED IN A 4 MIL CLEAR POLYETHYLENE PLASTIC BAG. ALL THE BAGGED HARDWARE SHALL BE PACKAGED IN A PRE-APPROVED RECLOSABLE WEATHERPROOF (NON-PAPER) CONTAINER. THE BRACKETS AND THE HARDWARE CONTAINER SHALL BE SHIPPED AND MARKED WITH THE FOLLOWING INFORMATION:

MANUFACTURER'S NAME
MANUFACTURER'S CATALOG NUMBER
MEMPHIS LIGHT, GAS AND WATER DIVISION
CLASS-ITEM #43-0638
15' TRUSS TYPE STEEL
LUMINAIRE SUPPORT WITH
SIMPLEX FITTINGS FOR USE WITH
38' STEEL EXPRESSWAY POLE
(GALVANIZED)
QUANTITY: _____

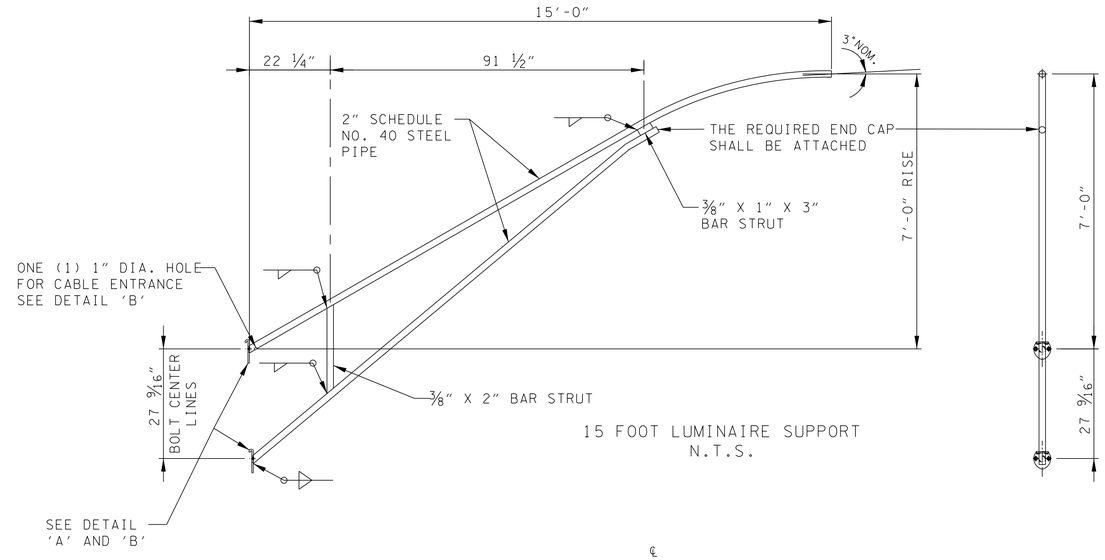

15 FOOT LUMINAIRE SUPPORT
N.T.S.

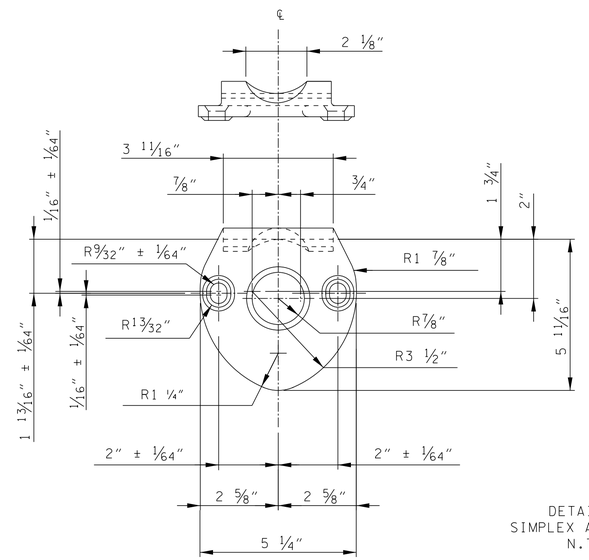

DETAIL 'A'
SIMPLEX ATTACHMENT
N.T.S.

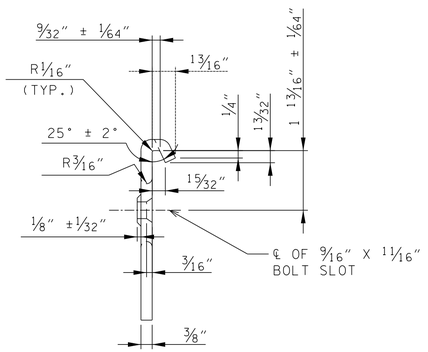

15 FOOT TRUSS TYPE
STEEL LUMINAIRE
SUPPORT WITH
SIMPLEX FITTINGS
FOR USE WITH
THIRTY-EIGHT
FOOT STEEL
EXPRESSWAY POLE
(GALVANIZED)

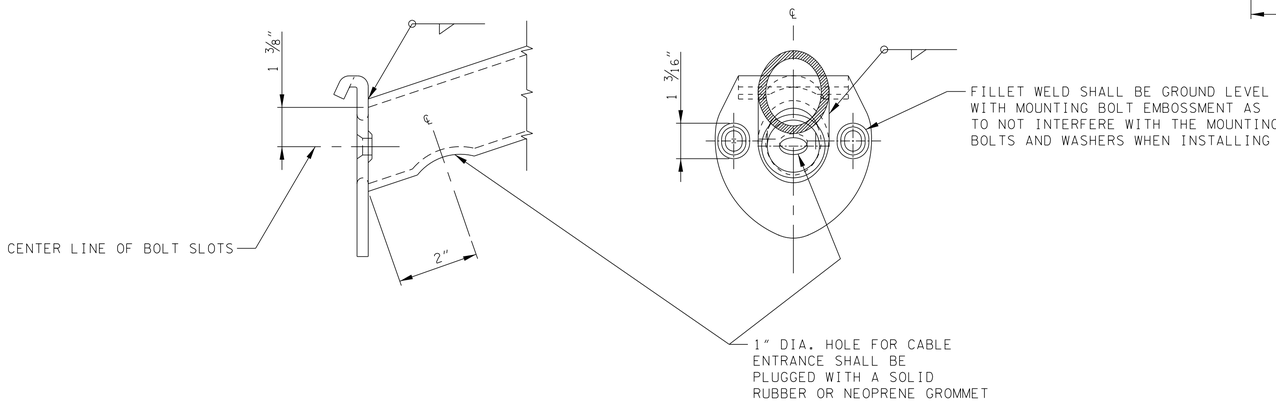

DETAIL 'B'
SUPPORT ARM SIMPLEX ATTACHMENTS
AND LOCATION OF CABLE ENTRANCE

MATERIAL SPECIFICATIONS	
PLATE AND BAR	ASTM - A 36
PIPE	ASTM - A 501
SIMPLEX ATTACHMENT	ASTM - 576
STRUCTURE FINISH	GALVANIZE TO ASTM - A 123
HARDWARE FINISH	GALVANIZE TO ASTM - A 153

GENERAL NOTES

(A) THE INFORMATION PROVIDED IN THIS STANDARD DRAWING IS EQUIVALENT TO MLGW STANDARD DRAWING 43-0638.

SEALED BY

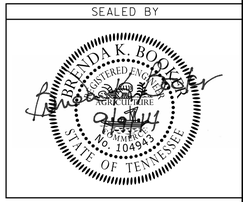

STATE OF TENNESSEE
DEPARTMENT OF TRANSPORTATION

LIGHTING DETAILS

(MLGW STANDARDS)

9/9/2014 5:39:24 PM
C:\Users\BE-Beo\Desktop\Booker\01_ACTIVE\TDOT\E616\SHELBY\06_SR 14 FROM SR 204 TO EGYPT LIGHTING\04_FINAL CONST DGN FILES\181L.sht

TYPE	YEAR	PROJECT NO.	SHEET NO.
CONST.	2014	STP-NH-14(23)	181K

SPECIFICATIONS

MATERIAL: THE COVER SHALL BE MANUFACTURED FROM FIBERGLASS REINFORCED POLYMER CONCRETE CONSISTING OF ULTRAVIOLET INHIBITED RESIN (20% MINIMUM), CATALYTIC HARDENER, FIBERGLASS MATTING, AND COURSE, MEDIUM, FINE AND VERY FINE SAND.

TOLERANCE: TOLERANCES SHALL BE HELD TO ± 1/16" OR ± 1% OF THE DIMENSION SHOWN ON THE DRAWING WHICHEVER OF THE TWO BEING THE LARGER UNLESS TOLERANCES ARE STIPULATED ON THE DRAWING. DRAFT ANGLES SHALL NOT EXCEED 3 DEGREES UNLESS OTHERWISE SPECIFIED.

MANUFACTURING: THE COVER SHALL BE POURED IN A METAL MOLD TO INSURE COMPLIANCE WITH THE STIPULATED TOLERANCES. ALL EDGES SHALL BE SMOOTH AND ROUNDED, FREE OF PROTRUSIONS AND/OR SHARP SURFACES. THE TOP SURFACE SHALL BE TEXTURED TO PROVIDE A 'NON-SKID' SURFACE FOR PEDESTRIAN TRAFFIC. THE NAME OF THE MANUFACTURER, DATE OF MANUFACTURE AND DIMENSIONS OF THE COVER SHALL BE PERMANENTLY MARKED ON THE UNDERSIDE OF THE COVER.

IMPACT AND LOAD BEARING STRENGTH: PROOF OF DESIGN TESTING: THE COVER SHALL BE TESTED FOR IMPACT AND LOAD BEARING STRENGTH. THE COVER SHALL BE IMPACT TESTED AND WITHSTAND 70 FT.-LBS IMPACT ADMINISTERED WITH A 12 POUND, 'B' TUP IN ACCORDANCE WITH ASTM D 2444, 'STANDARD TEST METHOD FOR IMPACT RESISTANCE WITH THERMOPLASTIC PIPE AND FITTINGS BY MEANS OF A TUP (FALLING WEIGHT)', WHILE RESTING UPON A FLAT RIGID SURFACE (CONCRETE OR ONE (1) INCH THICK STEEL PLATE). THE COVER SHALL THEN BE PLACED IN A STEEL FIXTURE SUPPORTING THE ON ALL EDGES BY 9/16". A LOAD SHALL BE APPLIED ON THE CENTER OF THE COVER BY AN 8" X 8" X 1" STEEL PLATE; A 1/2 INCH THICK NEOPRENE PAD AND A SPHERICALLY SEATED BEARING SALL BE USED TO INSURE UNIFORM DISTRIBUTION OF LOAD. A LOAD OF 16,000 POUNDS SHALL BE APPLIED AND REMOVED AT A UNIFORM RATE FOR 10 CYCLES. THE LOAD BEARING STRENGTH OF THE COVER SHALL BE 20,000 POUNDS. THE TEST SHALL BE WITNESSED BY, AND TEST REPORTS CERTIFIED BY, A PROFESSIONAL ENGINEER REGEISTRED IN THE STATE OF TESTING. THE TEST REPORTS INDICATING THE DESCRIPTION OF THE COVER, MANUFACTURERE, TEST FACILITY, EQUIPMENT OPERATOR, LOCTION(S) OF FAILURE AND ULTIMATE STRENGTH OF THE COVER SHALL BE SUBMITTED AT THE TIME OF BIDS. IN THE EVENT OF A DESIGN CHANGE, THE REQUIREMENTS DESCRIBED IN THIS PARAGRAPH SHALL BE PERFORMED ON THE NEW DESIGN.

PRODUCTION TESTING: THE MANUFACTURER SHALL TEST AN ADEQUATE NUMBER OF COVERS, SUPPLIED TO MLGW, TO INSURE COMPLIANCE WITH THE IMPACT AND LOAD BEARING STRENGTH REQUIREMENTS AS STATED IN THE PRECEEDING PARAGRAPH.

INSPECTION: MEMPHIS LIGHT, GAS AND WATER DIVISION RESERVES THE RIGHT TO REJECT ANY COVER THAT EXHIBITS A DEVIATION FROM THIS MATERIAL STANDARD. AN ENTIRE LOT MAY BE REJECTED IN THE EVENT THAT ANY COVER IN THE SHIPMENT DOES NOT MEET THE LOAD BEARING REUIREMENTS WHEN TESTED AT MLGW.

SHIPPING: THE COVER SHALL BE SHIPPED STACKED AND BANDED ON A PALLET AND MARKED WITH THE FOLLOWING INFORMATION:

MANUFACTURER'S NAME
MANUFACTURER'S CATALOG NUMBER
MEMPHIS LIGHT, GAS AND WATER DIVISION
CLASS-ITEM #41-1249
POLYMER CONCRETE, EXTRA STRENGTH
BOLT DOWN COVER
10 1/8" X 15 3/8" X 1 3/4"
FOR ELECTRIC STREET LIGHT HANDHOLE
QUANTITY: _____

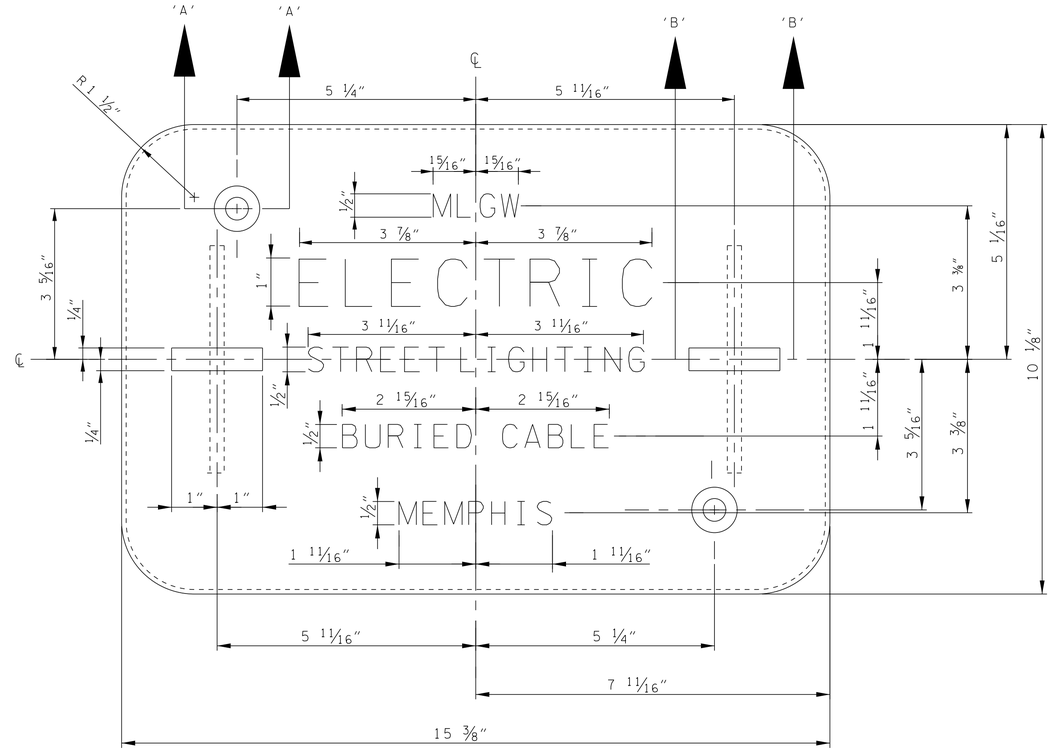

TOP VIEW
COVER
N.T.S.

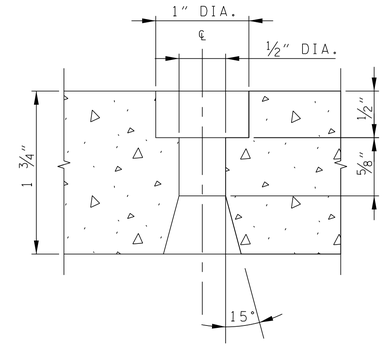

SECTION 'A' - 'A'

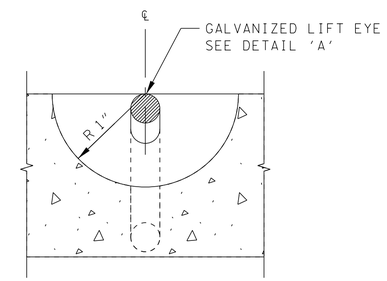

SECTION 'B' - 'B'

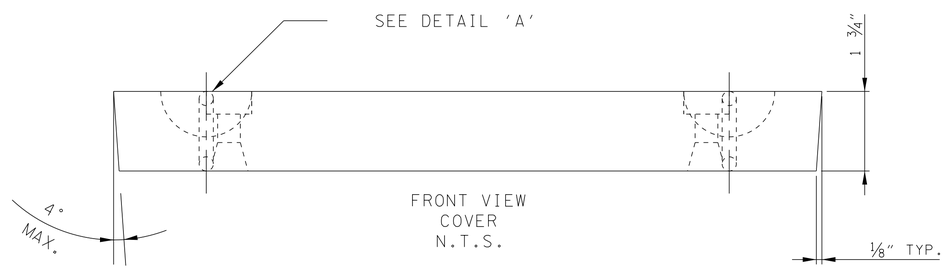

FRONT VIEW
COVER
N.T.S.

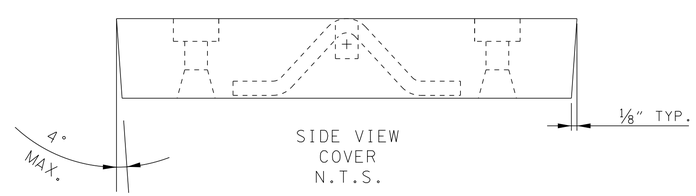

SIDE VIEW
COVER
N.T.S.

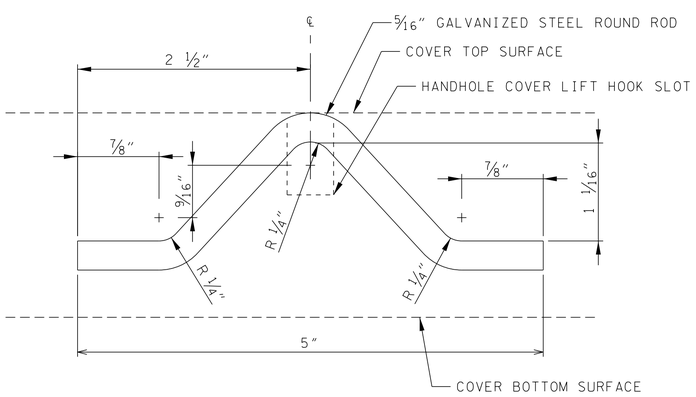

DETAIL 'A'
GALVANIZED LIFT EYE

POLYMER CONCRETE,
EXTRA STRENGTH
BOLT DOWN COVER
10 1/8" X 15 3/8" X 1 3/4"
ELECTRIC STREET
LIGHT HANDHOLE

SEALED BY

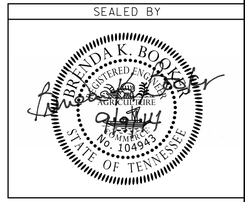

GENERAL NOTES

(A) THE INFORMATION PROVIDED IN THIS STANDARD DRAWING IS EQUIVALENT TO MLGW STANDARD DRAWING 41-1249.

STATE OF TENNESSEE
DEPARTMENT OF TRANSPORTATION

LIGHTING DETAILS

(MLGW STANDARDS)

9/9/2014 5:37:59 PM
C:\Users\BE-Bea\Desktop\Booker\01_ACTIVE\TDOT\E1616\SHELBY\06_SR 14 FROM SR 204 TO EGYPT LIGHTING\04_FINAL CONST DGN FILES\181K.sht

TYPE	YEAR	PROJECT NO.	SHEET NO.
CONST.	2014	STP-NH-14(23)	181J

SPECIFICATIONS

MATERIAL: THE CEMENT SHALL BE TYPE I OR TYPE II IN ACCORDANCE WITH ASTM DESIGNATION: C 150, 'STANDARD SPECIFICATION FOR PORTLAND CEMENT' AS LAST REVISED. THE AGGREGATE SHALL BE LIGHTWEIGHT IN ACCORDANCE WITH ASTM DESIGNATION: C330, 'STANDARD SPECIFICATION FOR LIGHTWEIGHT AGGREGATES FOR STRUCTURAL CONCRETE' AS LAST REVISED. ALSO, THE MAXIMUM SIZE OF THE COARSE AGGREGATE SHALL NOT EXCEED 1/5 OF THE MINIMUM WALL DIMENSION. THE PLAIN STEEL WIRE SHALL BE IN ACCORDANCE WITH ASTM DESIGNATION: A 82, 'STANDARD SPECIFICATION FOR STEEL WIRE, PLAIN, FOR CONCRETE REINFORCEMENT' AS LAST REVISED OR MEMPHIS LIGHT, GAS AND WATER DIVISION APPROVED EQUAL. THE LIFT EYE FOR THE COVER SHALL BE COMPLETELY DIPPED IN A PROTECTIVE ZINC COATING APPLIED IN ACCORDANCE WITH ASTM DESIGNATION: A 153, 'STANDARD SPECIFICATION FOR ZINC COATING (HOT DIP) ON IRON AND STEEL HARDWARE' AS LAST REVISED OR MEMPHIS LIGHT, GAS AND WATER APPROVED EQUAL.

TOLERANCE: TOLERANCES SHALL BE HELD TO ± 1/16" OF THE DIMENSION SHOWN, EXCEPT WHEN INDICATED ON DRAWING, THEN THIS SHALL BE THE TOLERANCE THAT SHALL PREVAIL. DRAFT ANGLES SHALL NOT EXCEED 3 DEGREES UNLESS OTHERWISE SPECIFIED.

MANUFACTURING: TO ASSURE A TRUE LEVEL SURFACE AND A SMOOTH FINISH, BOTH PRODUCTS SHALL BE RAMMED IN METAL MOLDS AND BE SCREEDED OFF WITH A STRAIGHT EDGE. ALL TOP SURFACES OF THE HANDHOLES SHALL BE FLAT AND FINISHED SMOOTH. CORNERS AND EDGES SHALL BE ROUNDED. THE CONCRETE, AFTER CURING TO 90% OF ITS ULTIMATE STRENGTH, SHALL BE 4000 PSI.

MARKING: THE COVER SHALL HAVE LETTERING TO IDENTIFY OWNERSHIP, STREETLIGHT, BURIED CABLE AND CITY IN GOTHIC FACE WITH AN OVERALL HEIGHT OF 1/2" AND SUBDIVISION OF UTILITY WITH AN OVERALL HEIGHT OF 1" IN THE LOCATIONS AS SHOWN ON THE DRAWING.

ASSEMBLY: AFTER FABRICATION THE HANDHOLE SHALL HAVE TWO (2) 3/8" 'L' BOLTS, TYPE 'A', BRASS - BROOKS PRODUCTRS INCORPORATED CATALOG #PBOLTA. SIX (6) 3/8" TYPE A (NARROW) PLAIN WASHERS, BRASS (ANSI/ASME B(8.22.1) - BROOKS PRODUCTS, INCORPORATED CATALOG #PWASH2003 AND FOUR (4) 3/8" - 16 UNC HEX JAM NUTS, BRASS - BROOKS PRODUCTS, INCORPORATED CATALOG #PNUT2002 INSTALLED IN THE LOCATION SHOWN ON THE DRAWING.

INSPECTION: MEMPHIS LIGHT, GAS AND WATER DIVISION RESERVES THE RIGHT TO REJECT ANY HANDHOLE THAT EXHIBITS A STRUCTURAL CRACK THAT WOULD IN THE OPINION OF THE DIVISION REPRESENTATIVE WEAKEN THE TOTAL ASSEMBLY. FAILURE TO MEET ANY ASPECT OF THESE SPECIFICATIONS WILL CONSTITUTE CAUSE FOR REJECTION.

SHIPPING: THE HANDHOLE AND COVER SHALL BE SHIPPED AS A COMPLETE UNIT WITH THE COVER SECURELY BOLTED DOWN IN THE HANDHOLE WITH THE 'L' BOLT ASSEMBLIES. EACH UNIT SHALL BE STACKED AND BANDED ON A PALLET AND MARKED WITH THE FOLLOWING INFORMATION.

MANUFACTURER'S NAME
MANUFACTURER'S CATALOG NUMBER
MEMPHIS LIGHT, GAS AND WATER DIVISION
CLASS-ITEM #43-0250
PRECRAST CONCRETE
ELECTRIC STREET LIGHT HANDHOLE
10 1/2" X 17 1/4" X 12"
WITH BOLT DOWN COVER
QUANTITY: _____

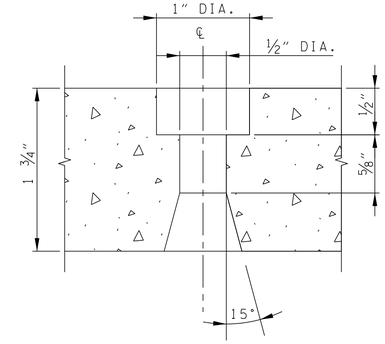

SECTION 'C' - 'C'

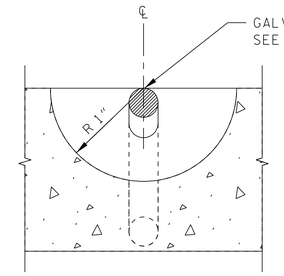

SECTION 'D' - 'D'

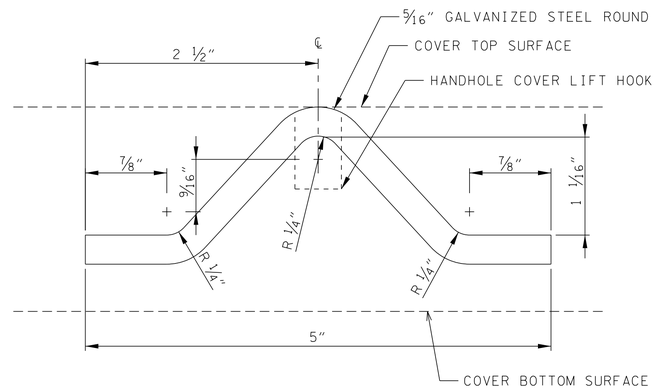

DETAIL 'B'
GALVANIZED LIFT EYE

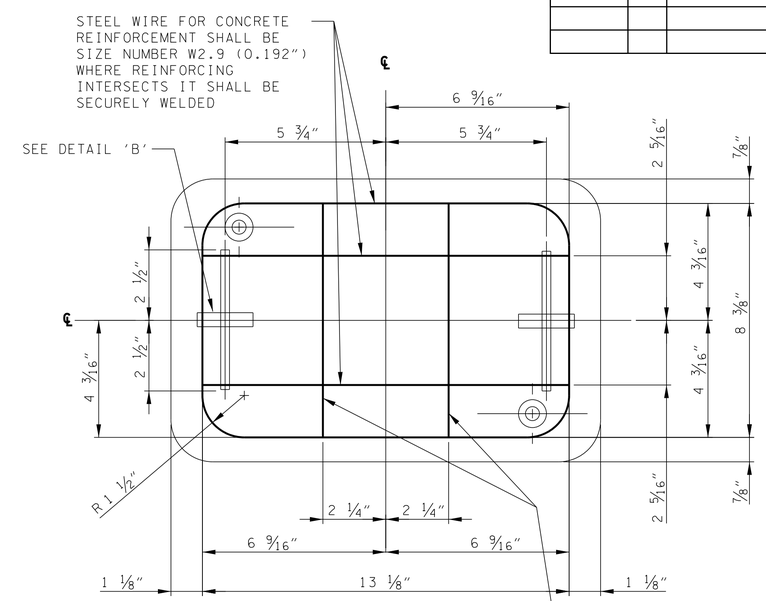

TOP VIEW
COVER
CONCRETE REINFORCEMENT
N.T.S.

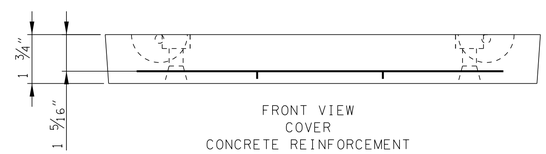

FRONT VIEW
COVER
CONCRETE REINFORCEMENT
N.T.S.

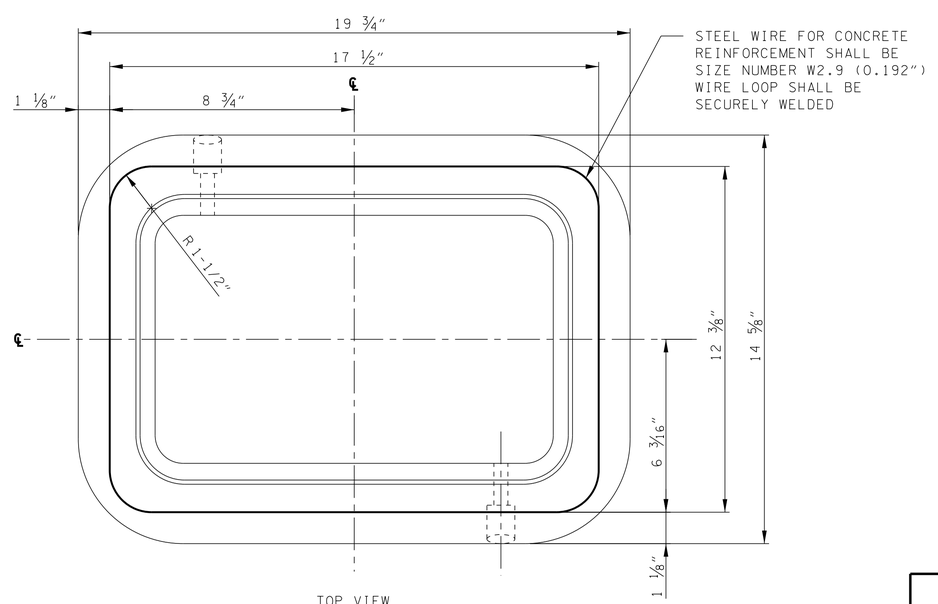

TOP VIEW
HANDHOLE
CONCRETE REINFORCEMENT
N.T.S.

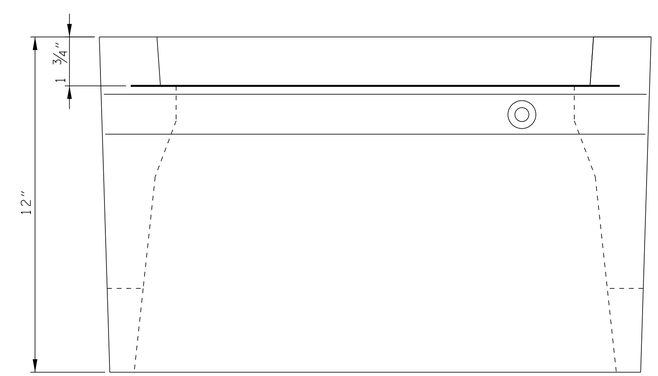

FRONT VIEW
HANDHOLE
CONCRETE REINFORCEMENT
N.T.S.

GENERAL NOTES

(A) THE INFORMATION PROVIDED IN THIS STANDARD DRAWING IS EQUIVALENT TO MLGW STANDARD DRAWING 41-0250.

PRECAST CONCRETE
ELECTRIC STREET
LIGHT HANDHOLE
10 1/2" X 17 1/4" X 12"
WITH BOLT DOWN COVER
SHEET 2 OF 2

SEALED BY

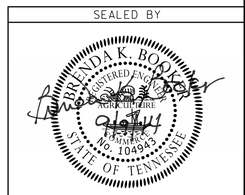

STATE OF TENNESSEE
DEPARTMENT OF TRANSPORTATION

LIGHTING DETAILS

(MLGW STANDARDS)

9/9/2014 5:36:52 PM
C:\Users\BE-Beo\Desktop\Booker\01_ACTIVE\TDOT\E1616\SHELBY\06.SR 14 FROM SR 204 TO EGYPT LIGHTING\04_FINAL CONST DGN FILES\181H & 181J.sht

TYPE	YEAR	PROJECT NO.	SHEET NO.
CONST.	2014	STP-NH-14(23)	181H

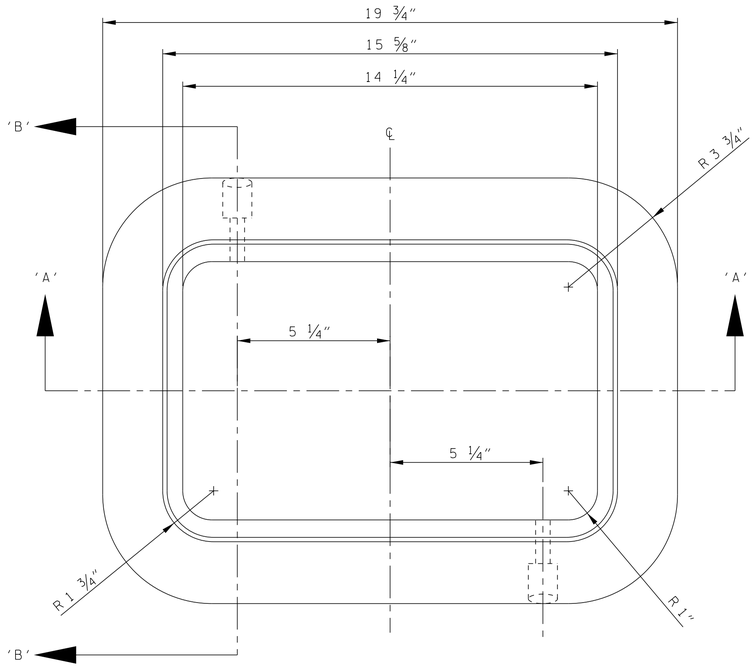

TOP VIEW
HANDHOLE
N.T.S.

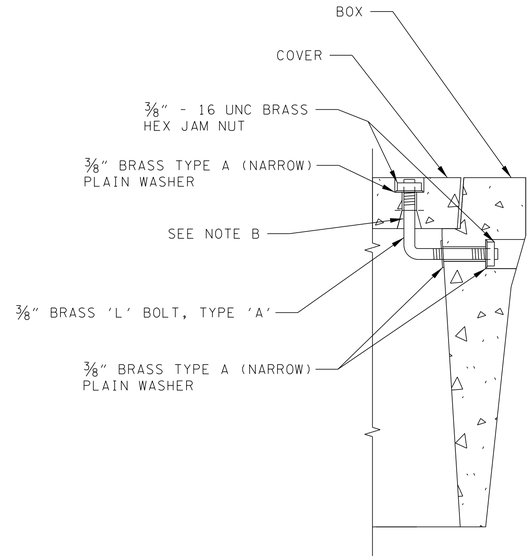

DETAIL 'A'
'L' BOLT ASSEMBLY

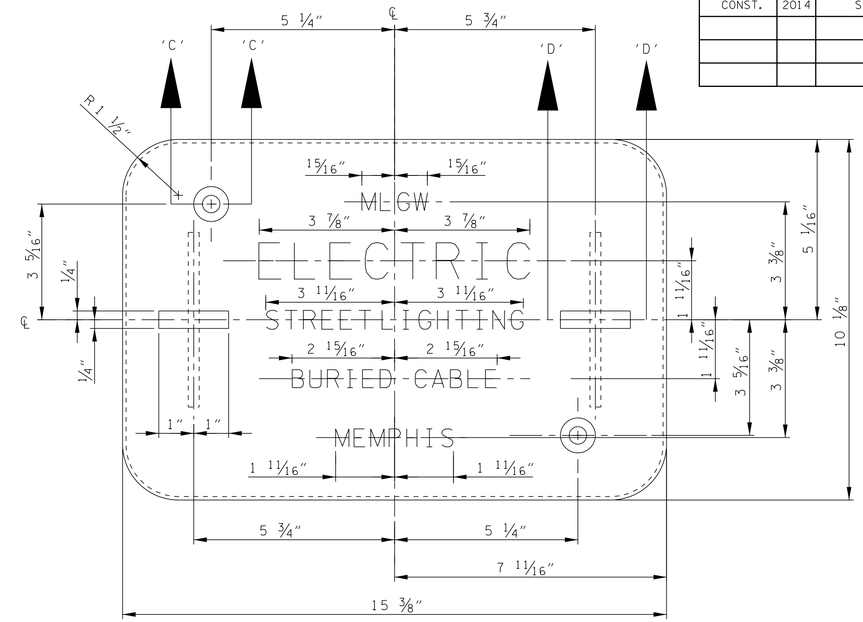

TOP VIEW
COVER
N.T.S.

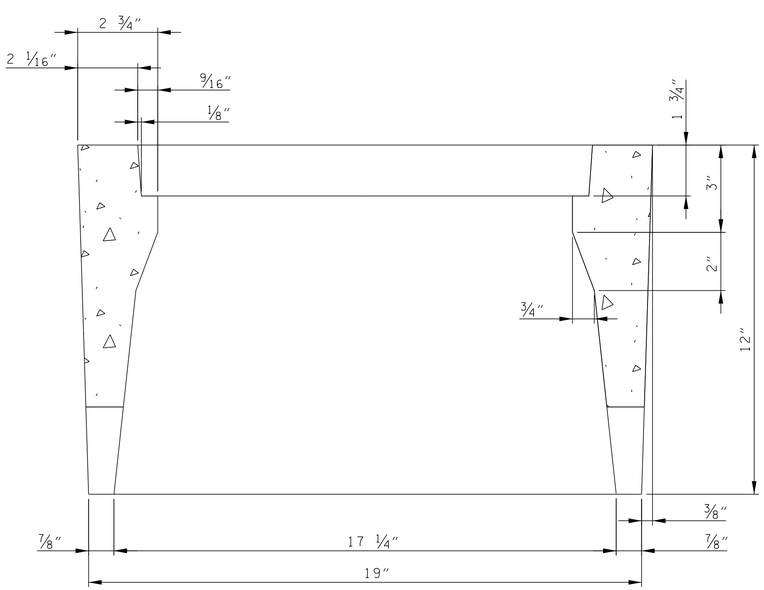

SECTION 'A' - 'A'
N.T.S.

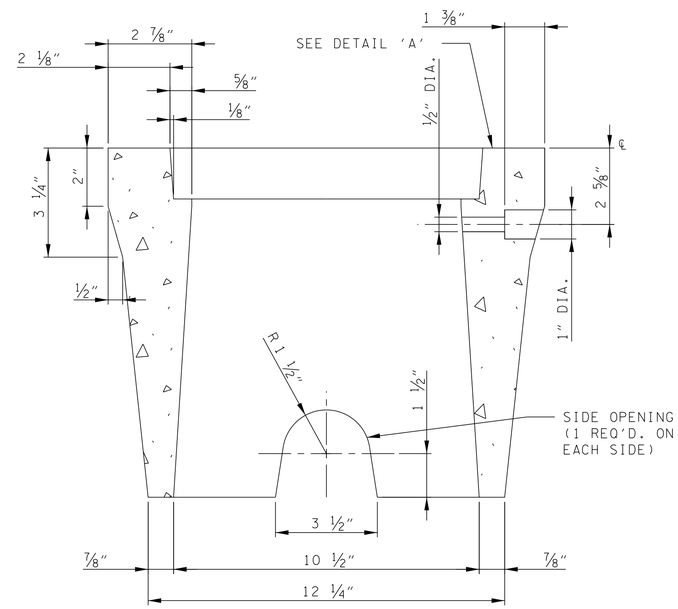

SECTION 'B' - 'B'
N.T.S.

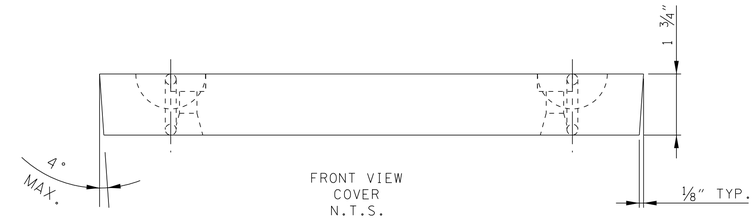

FRONT VIEW
COVER
N.T.S.

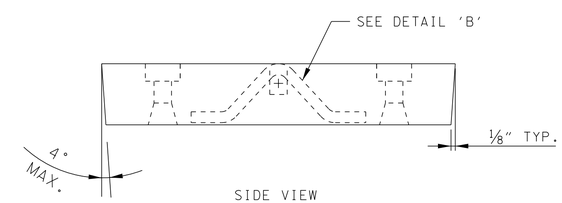

SIDE VIEW
COVER
N.T.S.

PRECAST CONCRETE
ELECTRIC STREET
LIGHT HANDHOLE
10 ½" X 17 ¼" X 12"
WITH BOLT DOWN COVER
SHEET 1 OF 2

SEALED BY

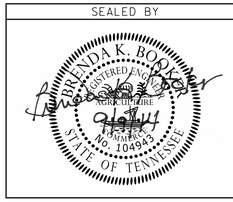

GENERAL NOTES

(A) THE INFORMATION PROVIDED IN THIS STANDARD DRAWING IS EQUIVALENT TO MLGW STANDARD DRAWING 41-0250.

(B) WHEN SHIPPED, THE COVER SHALL BE SECURELY BOLTED DOWN IN THE HANDHOLE WITH 'L' BOLT ASSEMBLIES.

(C) WEIGHT:

COVER	- 17# APPROX.
HANDHOLE	- 60# APPROX.
TOTAL	- 77# APPROX.

STATE OF TENNESSEE
DEPARTMENT OF TRANSPORTATION

LIGHTING DETAILS

(MLGW STANDARDS)

9/9/2014 5:35:54 PM
C:\Users\BE-Beo\Desktop\Booker\01_ACTIVE\TDOT\E16\16\SHELBY\06_SR 14 FROM SR 204 TO EGYPT LIGHTING\04_FINAL CONST DGN FILES\18H & 18IJ.sht

TYPE	YEAR	PROJECT NO.	SHEET NO.
R.O.W.	2013	STP-NH-14(23)	87H
CONST.	2014	STP-NH-14(23)	181G

REV. 06-04-14: ADDED SHEET TO PLANS.

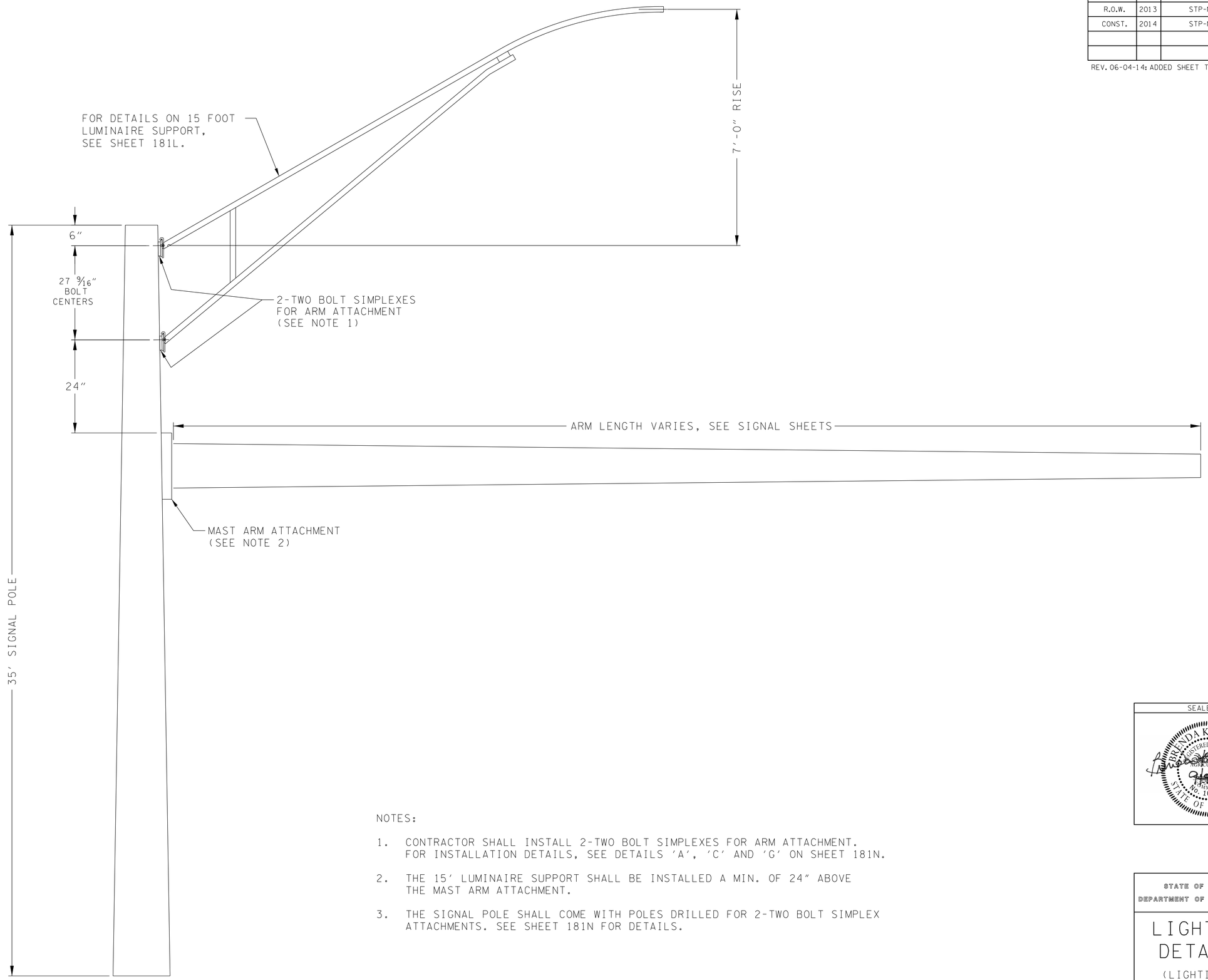

NOTES:

1. CONTRACTOR SHALL INSTALL 2-TWO BOLT SIMPLEXES FOR ARM ATTACHMENT. FOR INSTALLATION DETAILS, SEE DETAILS 'A', 'C' AND 'G' ON SHEET 181N.

2. THE 15' LUMINAIRE SUPPORT SHALL BE INSTALLED A MIN. OF 24" ABOVE THE MAST ARM ATTACHMENT.

3. THE SIGNAL POLE SHALL COME WITH POLES DRILLED FOR 2-TWO BOLT SIMPLEX ATTACHMENTS. SEE SHEET 181N FOR DETAILS.

SEALED BY

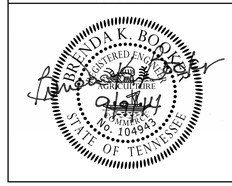

STATE OF TENNESSEE
DEPARTMENT OF TRANSPORTATION

LIGHTING DETAILS

(LIGHTING ON SIGNAL POLE)

9/9/2014 5:34:42 PM
C:\Users\BE-Bea\Desktop\Booker\01-ACTIVE\TDOT\E1616\SHELBY\06_SR 14 FROM SR 204 TO EGYPT LIGHTING\04_FINAL CONST DGN FILES\181G.sht

TYPE	YEAR	PROJECT NO.	SHEET NO.
R.O.W.	2013	STP-NH-14(23)	87G
CONST.	2014	STP-NH-14(23)	181F

REV. 06-04-14: ADDED SHEET TO PLANS.

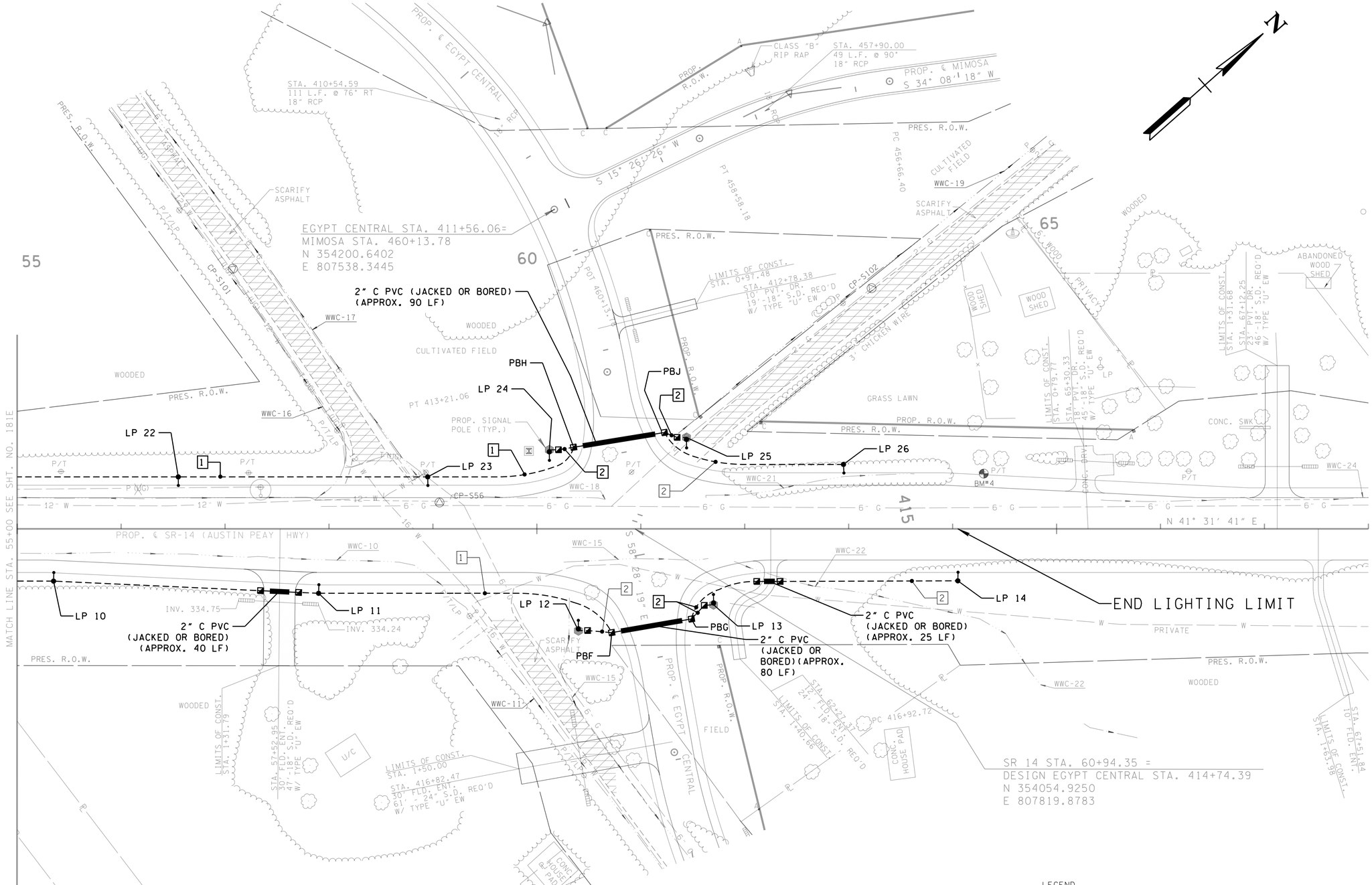

LIGHTING NOTE:

1. LP 12, LP 13, LP 24 AND LP 25 SHALL BE INSTALLED ON THE SIGNAL POLES. A PULL BOX LABELED 'STREET LIGHTING' SHALL BE INSTALLED AT THE BASE OF THE SIGNAL POLES.

LEGEND

- PROPOSED LIGHTING PULL BOX (MLGW STANDARD)
- PROPOSED LIGHT STANDARD WITH NEW ROADWAY LUMINAIRE (COBRAHEAD) (45' MH, 200W HPS, WIRED FOR 120V OPERATION)
- PROPOSED LUMINAIRE WITH 15' ARM ON SIGNAL POLE (COBRAHEAD) (42' MH, 200W HPS, WIRED FOR 120V OPERATION)
- EXISTING LIGHT STANDARD WITH LUMINAIRE AND ARM TO REMAIN
- EXISTING LIGHT STANDARD WITH LUMINAIRE AND ARM TO BE REMOVED
- PROPOSED LIGHTING CONDUIT (2" PVC, SCHEDULE 40)
- ABANDONED POWER (UNDERGROUND) CONDUIT AND WIRE
- CONDUIT RUN NUMBER (SEE SHEET 181B)

SEALED BY

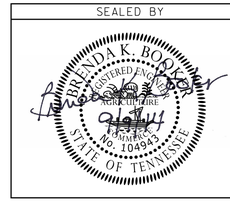

COORDINATES ARE NAD/83(1995), ARE DATUM ADJUSTED BY THE FACTOR OF 1.00001510 AND TIED TO THE TGRN. ALL ELEVATIONS ARE REFERENCED TO THE NAVD 1988.

STATE OF TENNESSEE
DEPARTMENT OF TRANSPORTATION

LIGHTING LAYOUT

STA.55+00 TO STA.68+00

SCALE: 1"=50'

9/9/2014 5:28:19 PM
C:\Users\BE-Beo\Desktop\Booker\01_ACTIVE\TDOT\E1616\SHELBY\06.SR 14 FROM SR 204 TO EGYPT LIGHTING\04_FINAL CONST DGN FILES\181F.sht

TYPE	YEAR	PROJECT NO.	SHEET NO.
R.O.W.	2013	STP-NH-14(23)	87F
CONST.	2014	STP-NH-14(23)	181E

REV. 06-04-14: ADDED SHEET TO PLANS.

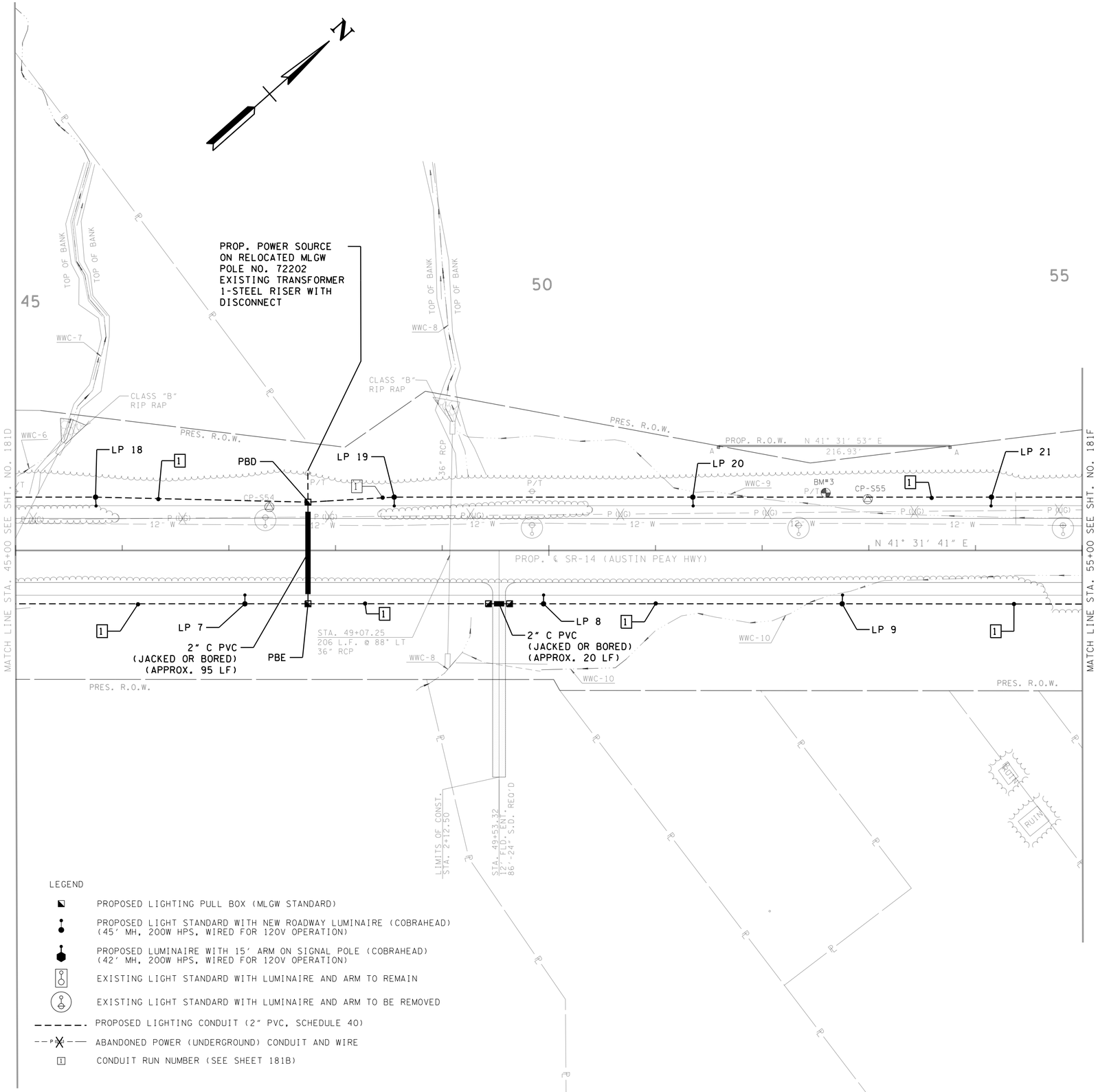

SEALED BY

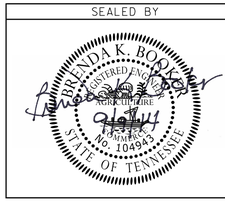

COORDINATES ARE NAD/83(1995), ARE DATUM ADJUSTED BY THE FACTOR OF 1.00001510 AND TIED TO THE TGRN. ALL ELEVATIONS ARE REFERENCED TO THE NAVD 1988.

STATE OF TENNESSEE
DEPARTMENT OF TRANSPORTATION

LIGHTING LAYOUT

STA.45+00 TO STA.55+00

SCALE: 1"=50'

9/9/2014 5:27:19 PM
C:\Users\BE-Bea\Desktop\Booker\01_ACTIVE\TDOT\E1616\SHELBY\06_SR 14 FROM SR 204 TO EGYPT LIGHTING\04_FINAL CONST DGN FILES\181E.sht

TYPE	YEAR	PROJECT NO.	SHEET NO.
R.O.W.	2013	STP-NH-14(23)	87E
CONST.	2014	STP-NH-14(23)	181D

REV. 06-04-14: ADDED SHEET TO PLANS.

LEGEND

- PROPOSED LIGHTING PULL BOX (MLGW STANDARD)
- PROPOSED LIGHT STANDARD WITH NEW ROADWAY LUMINAIRE (COBRAHEAD) (45' MH, 200W HPS, WIRED FOR 120V OPERATION)
- PROPOSED LUMINAIRE WITH 15' ARM ON SIGNAL POLE (COBRAHEAD) (42' MH, 200W HPS, WIRED FOR 120V OPERATION)
- EXISTING LIGHT STANDARD WITH LUMINAIRE AND ARM TO REMAIN
- EXISTING LIGHT STANDARD WITH LUMINAIRE AND ARM TO BE REMOVED
- PROPOSED LIGHTING CONDUIT (2" PVC, SCHEDULE 40)
- ABANDONED POWER (UNDERGROUND) CONDUIT AND WIRE
- CONDUIT RUN NUMBER (SEE SHEET 181B)

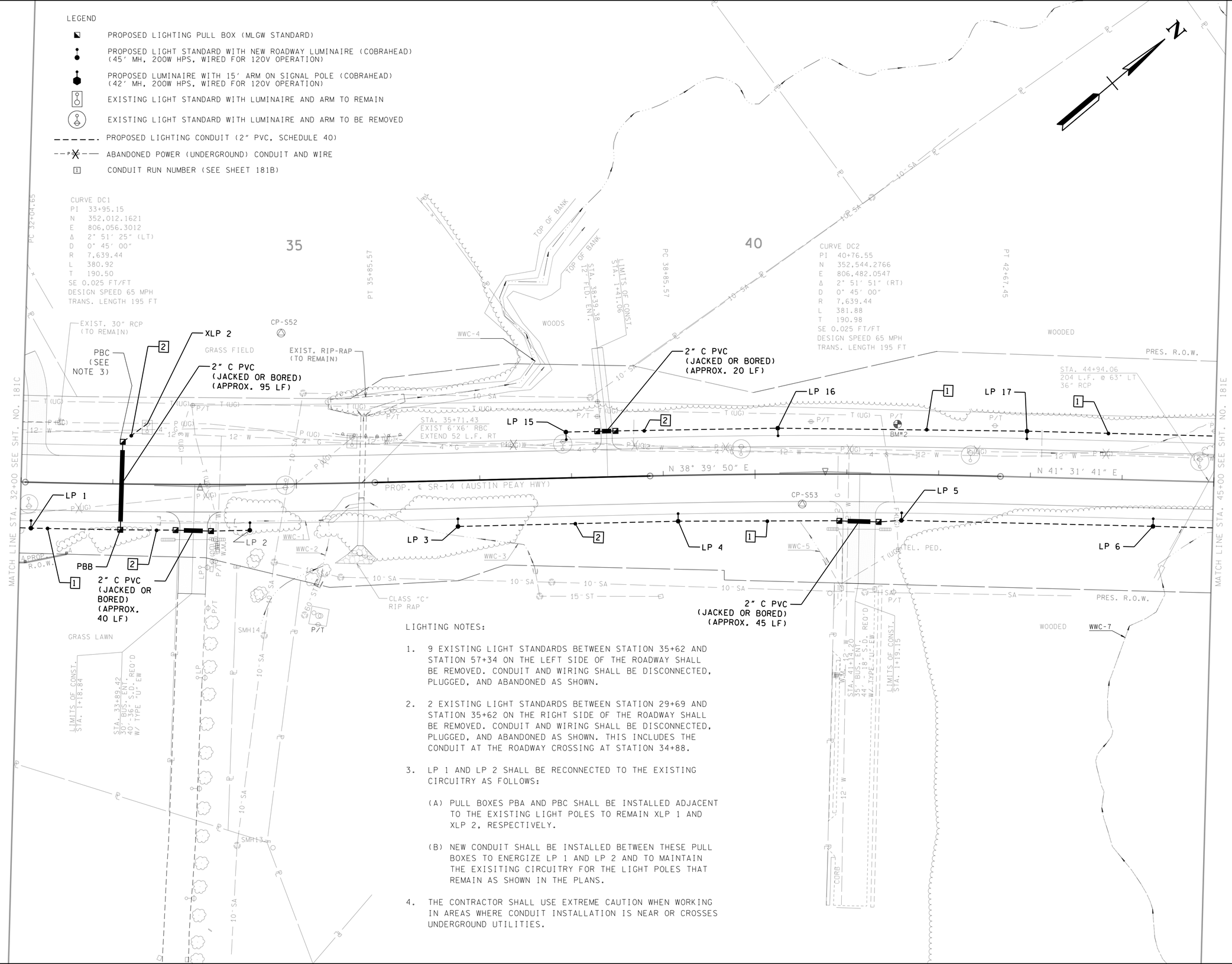

LIGHTING NOTES:

1. 9 EXISTING LIGHT STANDARDS BETWEEN STATION 35+62 AND STATION 57+34 ON THE LEFT SIDE OF THE ROADWAY SHALL BE REMOVED. CONDUIT AND WIRING SHALL BE DISCONNECTED, PLUGGED, AND ABANDONED AS SHOWN.

2. 2 EXISTING LIGHT STANDARDS BETWEEN STATION 29+69 AND STATION 35+62 ON THE RIGHT SIDE OF THE ROADWAY SHALL BE REMOVED. CONDUIT AND WIRING SHALL BE DISCONNECTED, PLUGGED, AND ABANDONED AS SHOWN. THIS INCLUDES THE CONDUIT AT THE ROADWAY CROSSING AT STATION 34+88.

3. LP 1 AND LP 2 SHALL BE RECONNECTED TO THE EXISTING CIRCUITRY AS FOLLOWS:

   (A) PULL BOXES PBA AND PBC SHALL BE INSTALLED ADJACENT TO THE EXISTING LIGHT POLES TO REMAIN XLP 1 AND XLP 2, RESPECTIVELY.

   (B) NEW CONDUIT SHALL BE INSTALLED BETWEEN THESE PULL BOXES TO ENERGIZE LP 1 AND LP 2 AND TO MAINTAIN THE EXISITING CIRCUITRY FOR THE LIGHT POLES THAT REMAIN AS SHOWN IN THE PLANS.

4. THE CONTRACTOR SHALL USE EXTREME CAUTION WHEN WORKING IN AREAS WHERE CONDUIT INSTALLATION IS NEAR OR CROSSES UNDERGROUND UTILITIES.

SEALED BY

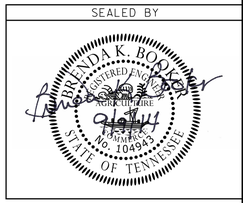

COORDINATES ARE NAD/83(1995), ARE DATUM ADJUSTED BY THE FACTOR OF 1.0000150 AND TIED TO THE TGRN. ALL ELEVATIONS ARE REFERENCED TO THE NAVD 1988.

STATE OF TENNESSEE
DEPARTMENT OF TRANSPORTATION

LIGHTING LAYOUT

STA.32+00 TO STA.45+00

SCALE: 1"=50'

9/9/2014 5:25:25 PM
C:\Users\BE-Beo\Desktop\Booker\01_ACTIVE\TDOT\E1616\SHELBY\06_SR 14 FROM SR 204 TO EGYPT LIGHTING\04_FINAL CONST DGN FILES\181D.sht

TYPE	YEAR	PROJECT NO.	SHEET NO.
R.O.W.	2013	STP-NH-14(23)	87D
CONST.	2014	STP-NH-14(23)	181C

REV. 06-04-14: ADDED SHEET TO PLANS.

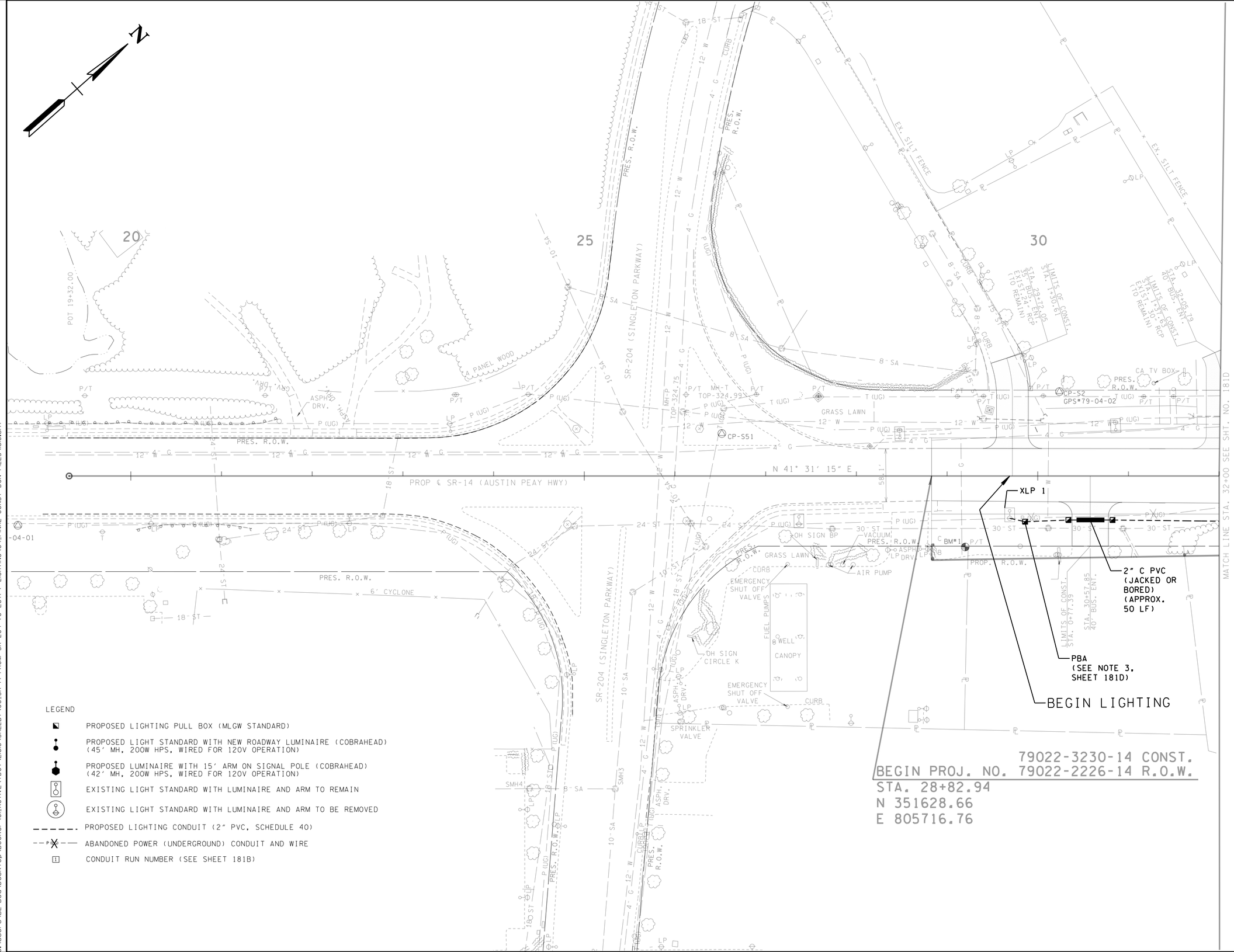

LEGEND

- PROPOSED LIGHTING PULL BOX (MLGW STANDARD)
- PROPOSED LIGHT STANDARD WITH NEW ROADWAY LUMINAIRE (COBRAHEAD) (45' MH, 200W HPS, WIRED FOR 120V OPERATION)
- PROPOSED LUMINAIRE WITH 15' ARM ON SIGNAL POLE (COBRAHEAD) (42' MH, 200W HPS, WIRED FOR 120V OPERATION)
- EXISTING LIGHT STANDARD WITH LUMINAIRE AND ARM TO REMAIN
- EXISTING LIGHT STANDARD WITH LUMINAIRE AND ARM TO BE REMOVED
- PROPOSED LIGHTING CONDUIT (2" PVC, SCHEDULE 40)
- ABANDONED POWER (UNDERGROUND) CONDUIT AND WIRE
- CONDUIT RUN NUMBER (SEE SHEET 181B)

79022-3230-14 CONST.
BEGIN PROJ. NO. 79022-2226-14 R.O.W.
STA. 28+82.94
N 351628.66
E 805716.76

SEALED BY

BRENDA K. BOOKER
REGISTERED ENGINEER
No. 104943
STATE OF TENNESSEE

COORDINATES ARE NAD/83(1995), ARE DATUM ADJUSTED BY THE FACTOR OF 1.00001510 AND TIED TO THE TGRN. ALL ELEVATIONS ARE REFERENCED TO THE NAVD 1988.

STATE OF TENNESSEE
DEPARTMENT OF TRANSPORTATION

LIGHTING LAYOUT

BEGIN PROJ. TO STA.32+00

SCALE: 1"=50'

9/9/2014 5:26:11PM
C:\Users\BE-Beo\Desktop\Booker\01_ACTIVE\TDOT\EI6I6\SHELBY\06_SR 14 FROM SR 204 TO EGYPT LIGHTING\04_FINAL CONST DGN FILES\181C.sht

TYPE	YEAR	PROJECT NO.	SHEET NO.
R.O.W.	2013	STP-NH-14(23)	87C
CONST.	2014	STP-NH-14(23)	181B

REV. 06-04-14: ADDED SHEET TO PLANS.

WIRING AND CONDUIT SCHEDULE

RUN NO.	POLE NO. TO POLE NO.			TRENCHED CONDUIT LENGTH (FT)	JACK & BORE CONDUIT LENGTH (FT)	CABLE LENGTH (FT)	SPECIAL NOTE	NO. OF 2" SCH. 40 PVC CONDUIT (1)	NO. & SIZE OF WIRE
1	XLP 1	TO	PBA THRU PBC	300	145	445	(2)	1	3 @ #4 AWG 1 @ #4 GROUND
	PS	TO	PBD, PBE LP 7 THRU LP 4	860	140	1000		1	
	PBD	TO	LP 19 THRU LP 23 PBH, PBJ	1295	90	1385		1	
	PBD	TO	LP 18 THRU LP 16	765		765		1	
	PBE	TO	LP 8 THRU LP 11 PBF, PBG	1270	140	1410		1	
2	PBC	TO	XLP 2	35		35	(2)	1	2 @ #4 AWG 1 @ #4 GROUND
	PBB	TO	LP 2	110	40	150	(2)	1	
	LP 4	TO	LP 3	245		245		1	
	PBH	TO	LP 24	30		30		1	
	PBJ	TO	LP 25	25		25		1	
	PBJ	TO	LP 26	185		185		1	
	LP 16	TO	LP 15	215	20	235		1	
	PBF	TO	LP 12	35		35		1	
	PBG	TO	LP 13	35		35		1	
	PBG	TO	LP 14	255	25	280		1	

(1) MAX ALLOWABLE FILL = 40%
(2) SHALL BE RECONNECTED TO THE EXISTING CIRCUITRY

PS = POWER SOURCE
PBA THRU PBJ = PULL BOX A THRU PULL BOX J

MLGW WIRING DESIGN CRITERIA

(1) ALL ROADWAY CIRCUITS SHALL BE 3-WIRE (PLUS #4 SOLID BARE COPPER GROUND WIRE), 120/240 VOLTS. THE LUMINAIRES SHOULD OPERATE AT 120 VOLTS WITH CONSECUTIVE LUMINAIRES BEING CONNECTED ALTERNATING BETWEEN "A" PHASE AND "B" PHASE OF THE THREE WIRE CIRCUIT.

(2) THE LIGHTING SYSTEM SHALL OPERATE ON A THREE WIRE FEED WITH ALTERNATING CONSECUTIVE LIGHTS ON EACH OF THE TWO PHASES. THE NEUTRAL IS COMMON TO EACH PHASE. THE LAST SPAN OF WIRE IN A CIRCUIT CAN BE A 2-WIRE CIRCUIT (PLUS BARE COPPER GROUND WIRE).

(3) CONDUIT BENDS SHALL NOT EXCEED A 24" RADIUS.

(4) ALL CONDUIT SHALL BE INSTALLED TO ENTER A NEW OR EXISTING PULLBOX ON ONLY ONE END OF THE PULL BOX. ENDBELLS SHALL BE PROVIDED ON ALL CONDUITS. WIRING FOR ONLY ONE CIRCUIT SHALL BE ALLOWED IN A PULL BOX.

(5) ALL SPLICES SHALL BE IN PULLBOXES OR HANDHOLES USING MLGW APPROVED CONNECTORS, OR MOLES AND TAP KITS.

(6) DURING THE INSTALLATION OF ANY CABLE, THE CONTRACTOR SHALL TAKE CARE NOT TO DAMAGE CONDUCTORS, INSULATION, OR OUTER COVERING. THE LENGTH OF CABLE INSTALLED SHALL NOT CAUSE EXCESSIVE STRESS ON THE CONDUCTORS OR ANY PART OF THE CABLE. AN INSERT LUBRICANT APPROVED BY MLGW SHALL BE USED IN PLACING CABLE IN CONDUIT.

(7) A SOLID BARE GROUND WIRE SHALL BE INSTALLED OUTSIDE THE CONDUIT IN THE TRENCH.

(8) PULL BOXES ARE REQUIRED TO BE INSTALLED IN ANY CONDUIT RUN THAT EXCEEDS 1000 FT. THE LOCATION OF THE PULL BOX SHALL BE SUCH THAT THE PULL LENGTH BETWEEN PULLING POINTS DOES NOT EXCEED 1000 FT.

(9) ALL WIRES RUN IN CONDUIT SHALL BE SOLID COPPER AND HAVE USE-2 RUGGEDIZED INSULATION.

SEALED BY

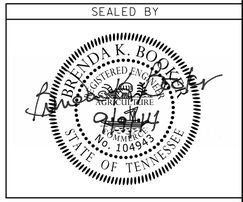

STATE OF TENNESSEE
DEPARTMENT OF TRANSPORTATION

LIGHTING DETAILS

(WIRING DATA)

9/9/2014 5:21:29 PM
C:\Users\BE-Beo\Desktop\Booker\01_ACTIVE\TDOT\E1616\SHELBY\06_SR 14 FROM SR 204 TO EGYPT LIGHTING\04_FINAL CONST DGN FILES\181B.sht

TYPE	YEAR	PROJECT NO.	SHEET NO.
R.O.W.	2013	STP-NH-14(23)	87B
CONST.	2014	STP-NH-14(23)	181A

REV. 06-04-14: ADDED SHEET TO PLANS.

ROADWAY LIGHT POLE SCHEDULE

	LIGHT POLE NO.	SHEET NO.	LAMP WATTAGE (HPS)	VOLTAGE	LUMINAIRE TYPE	NO. OF LAMPS	MOUNTING HEIGHT (FT)	BASELINE	STATION	OFFSET (FT)	SIDE	NORTHING	EASTING
(1)	LP 1	181D	200	120/240	A	1	45	SR 14	32+11	50.0	RT	351841.8963	805972.3425
(1)	LP 2	181D	200	120/240	A	1	45	SR 14	34+49	50.0	RT	352023.1120	806127.5373
	LP 3	181D	200	120/240	A	1	45	SR 14	36+75	50.0	RT	352199.5042	806270.2447
	LP 4	181D	200	120/240	A	1	45	SR 14	39+15	50.0	RT	352386.9020	806420.1848
	LP 5	181D	200	120/240	A	1	45	SR 14	41+60	50.0	RT	352573.6959	806575.9132
	LP 6	181D	200	120/240	A	1	45	SR 14	44+35	50.0	RT	352779.5385	806757.2037
	LP 7	181E	200	120/240	A	1	45	SR 14	47+15	50.0	RT	352989.1556	806942.8396
	LP 8	181E	200	120/240	A	1	45	SR 14	49+95	50.0	RT	353198.7725	807128.4756
	LP 9	181E	200	120/240	A	1	45	SR 14	52+75	50.0	RT	353408.3891	807314.1116
	LP 10	181F	200	120/240	A	1	45	SR 14	55+35	50.3	RT	353602.8384	807486.7082
	LP 11	181F	200	120/240	A	1	45	SR 14	57+90	62.0	RT	353785.9684	807664.5265
	LP 12	181F	200	120/480	A	1	42	SR 14	ON SIGNAL POLES	NA	RT	NA	NA
	LP 13	181F	200	120/240	A	1	42	SR 14	ON SIGNAL POLES	NA	RT	NA	NA
	LP 14	181F	200	120/240	A	1	45	SR 14	64+05	50.0	RT	354254.3438	808063.2851
	LP 15	181D	200	120/240	A	1	45	SR 14	37+95	50.0	LT	352355.6713	806267.1011
	LP 16	181D	200	120/240	A	1	45	SR 14	40+25	50.0	LT	352535.1710	806412.3745
	LP 17	181D	200	120/240	A	1	45	SR 14	42+95	50.0	LT	352741.0233	806589.4911
	LP 18	181E	200	120/240	A	1	45	SR 14	45+75	50.0	LT	352950.6431	806775.1427
	LP 19	181E	200	120/240	A	1	45	SR 14	48+55	50.0	LT	353160.2575	806960.7629
	LP 20	181E	200	120/240	A	1	45	SR 14	51+35	50.0	LT	353369.8741	807146.3989
	LP 21	181E	200	120/240	A	1	45	SR 14	54+15	50.0	LT	353579.4924	807332.0346
	LP 22	181F	200	120/240	A	1	45	SR 14	56+55	50.0	LT	353759.1633	807491.1513
	LP 23	181F	200	120/240	A	1	45	SR 14	58+95	50.0	LT	353938.8349	807650.2678
	LP 24	181F	200	120/240	A	1	45	SR 14	ON SIGNAL POLES	NA	LT	NA	NA
	LP 25	181F	200	120/240	A	1	42	SR 14	ON SIGNAL POLES	NA	LT	NA	NA
	LP 26	181F	200	120/240	A	1	42	SR 14	62+95	62.0	LT	354246.2431	807906.4785

A = ROADWAY LUMINAIRE WITH 15' ARM (COBRABHEAD)

(1) RECONNECT TO EXISTING CIRCUITRY

SEALED BY

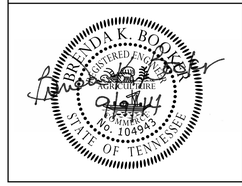

STATE OF TENNESSEE
DEPARTMENT OF TRANSPORTATION

LIGHTING DETAILS

(POLE DATA)

9/9/2014 5:19:09 PM
C:\Users\BE-Beq\Desktop\Booker\01-ACTIVE\TDOT\E1616\SHELBY\06_SR 14 FROM SR 204 TO EGYPT LIGHTING\04_FINAL CONST DGN FILES\181A.sht

TYPE	YEAR	PROJECT NO.	SHEET NO.
R.O.W.	2013	STP-NH-14(23)	87A
CONST.	2014	STP-NH-14(23)	181

REV. 06-04-14: ADDED SHEET TO PLANS.

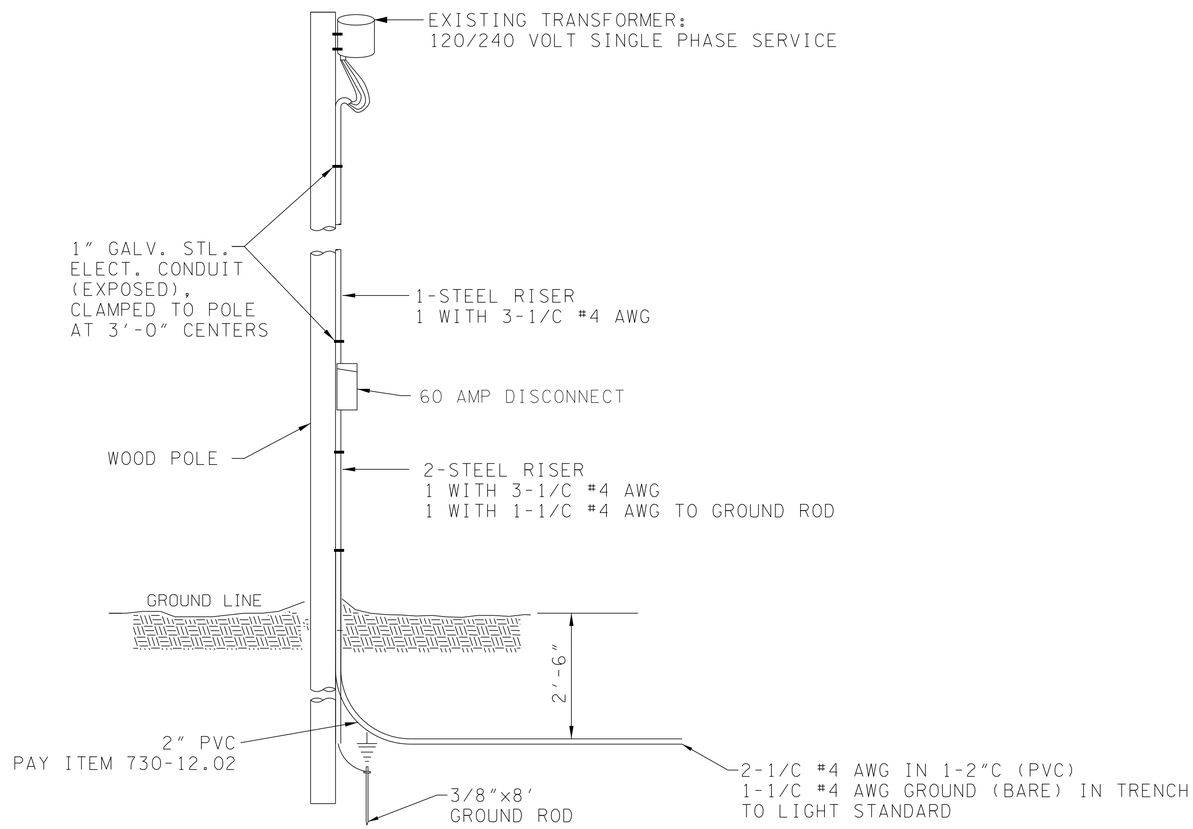

DETAIL 'A'
PROPOSED ELECTRICAL SERVICE

N.T.S.

SR 14 (AUSTIN PEAY HWY) APPROXIMATELY STA. 47+48, 68.8 LT, SHEET 181E

POWER DISTRIBUTION NOTES

(1) FOR ELECTRICAL SERVICE CONNECTION, CONTACT MLGW, DANIEL LACKEY, (901) 528-4211. DANIEL LACKEY MAY ALSO BE CONTACTED FOR POWER SERVICE REQUIREMENTS AND COST.

(2) THE CONTRACTOR SHALL COORDINATE ALL WORK AT THE POWER SOURCE WITH MLGW, DANIEL LACKEY, AND THE ENGINEER.

POWER SOURCE

(3) THE PROPOSED POWER SOURCE SHALL BE LOCATED AT MLGW POLE NO. 72202.

(4) THE PROPOSED LIGHTING POLES LP 1 AND LP 2 SHALL BE RECONNECTED TO THE EXISTING LIGHTING CIRCUITRY.

(5) THE PROPOSED LIGHTING POLES LP 3 THRU LP 26 SHALL BE CONNECTED TO THE POWER SOURCE AS SHOWN IN THE PLANS.

(6) CONTRACTOR IS RESPONSIBLE FOR ALL MATERIAL AND INSTALLATION UP TO AND INCLUDING THE WEATHERHEAD AND THE 60 AMP DISCONNECT.

(7) LIGHTING SYSTEM SHALL BE 120/240 VOLT SINGLE PHASE SERVICE. LUMINAIRES SHALL BE BALLASTED FOR 120 VOLT OPERATION.

(8) THE CONTRACTOR SHALL BALANCE THE LOADS.

SEALED BY

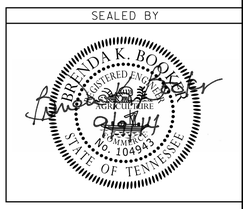

STATE OF TENNESSEE
DEPARTMENT OF TRANSPORTATION

ELECTRICAL DETAILS

(POWER SOURCE)

9/9/2014 5:17:01 PM
C:\Users\BE-Beo\Desktop\Booker\01_ACTIVE\TDOT\E1616\SHELBY\06.SR 14 FROM SR 204 TO EGYPT LIGHTING\04_FINAL CONST DGN FILES\181.sht