Index Of Sheets
(SEE SHEET IA)

# STATE OF TENNESSEE
# DEPARTMENT OF TRANSPORTATION
# BUREAU OF ENGINEERING

# FENTRESS COUNTY

INDUSTRIAL ACCESS ROAD SERVING
CLARKRANGE REGIONAL BUSINESS PARK

## CONSTRUCTION

| TENN. | YEAR | SHEET NO. |
|---|---|---|
| | 2015 | 1 |
| FED. AID PROJ. NO. | | |
| STATE PROJ. NO. | 25945-3477-04 | |

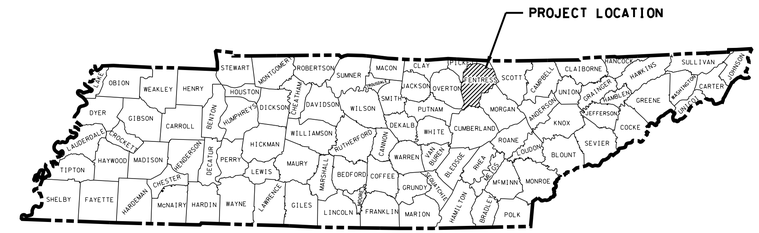


N

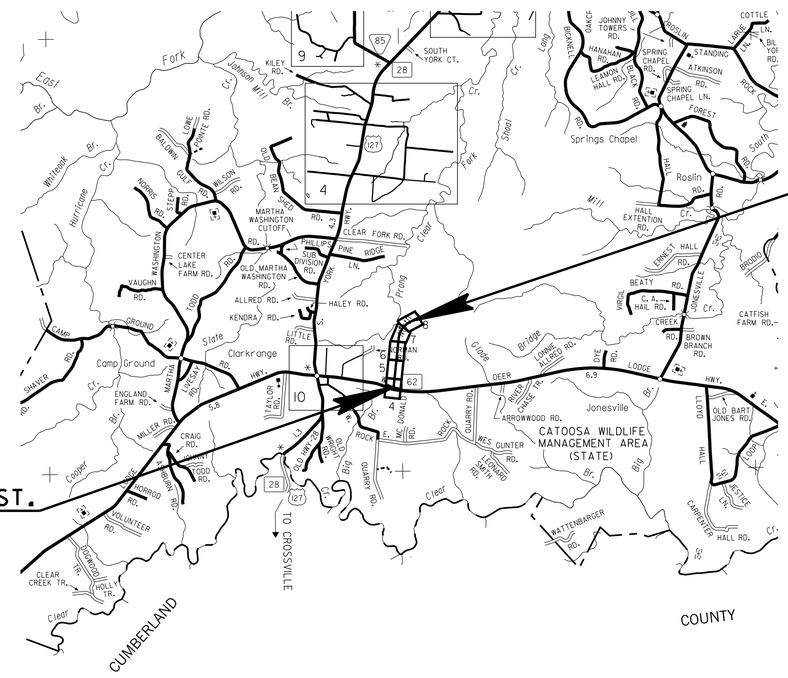


BEGIN PROJ. NO. 25945-3477-04 CONST.
STA. 10+12.02

END PROJ. NO. 25945-3477-04 CONST.
STA. 61+03.33

| NO EXCLUSIONS |
|---|
| NO EQUATIONS |

**UNOFFICIAL SET**
**NOT FOR BIDDING**

SEALED BY
Brian H. Trotter
REGISTERED ENGINEER
AGRICULTURE
COMMERCE
NO. 102219
STATE OF TENNESSEE

APPROVED: Paul D. Doggett
CHIEF ENGINEER

DATE:

APPROVED:
JOHN SCHROER, COMMISSIONER

SURVEY DATE : JULY 17, 2013
REVISED: JANUARY 24, 2014
REVISED: MAY 6, 2014

SCALE: 1"= 1 MILE

| | |
|---|---|
| ROADWAY LENGTH | 0.964 MILES |
| BRIDGE LENGTH | 0.000 MILES |
| BOX BRIDGE LENGTH | 0.000 MILES |
| PROJECT LENGTH | 0.964 MILES |

DESIGN SPEED : 30 MPH

U.S. DEPARTMENT OF TRANSPORTATION
FEDERAL HIGHWAY ADMINISTRATION

APPROVED:

DIVISION ADMINISTRATOR DATE

## SPECIAL NOTES

PROPOSALS MAY BE REJECTED BY THE COMMISSIONER IF ANY OF THE UNIT PRICES CONTAINED THEREIN ARE OBVIOUSLY UNBALANCED, EITHER EXCESSIVE OR BELOW THE REASONABLE COST ANALYSIS VALUE.

THIS PROJECT TO BE CONSTRUCTED UNDER THE STANDARD SPECIFICATIONS OF THE TENNESSEE DEPARTMENT OF TRANSPORTATION DATED JANUARY 1, 2015 AND ADDITIONAL SPECIFICATIONS AND SPECIAL PROVISIONS CONTAINED IN THE PLANS AND IN THE PROPOSAL CONTRACT.

TDOT ROAD SP. SV. 2 ROBERT RODGERS, P.E.
DESIGNED BY ICA ENGINEERING
DESIGNER JAMES SARR, P.E. CHECKED BY BRIAN TROTTER, P.E.
P.E. NO. 25945-1477-04
PIN NO. 117511.00

2/9/2015 12:57:17 PM
H:\ill6003\Dgn\001-cons t.sht

| TYPE | YEAR | PROJECT NO. | SHEET NO. |
|---|---|---|---|
| CONST. | 2015 | 25945-3477-04 | 1A |

# INDEX


| SHEET NAME | SHEET NO. |
|---|---|
| TITLE SHEET | 1 |
| ROADWAY INDEX AND STANDARD DRAWINGS INDEX | 1A |
| PROJECT COMMITMENTS | 1B |
| ESTIMATED ROADWAY QUANTITIES | 2 |
| TYPICAL SECTIONS AND PAVING SCHEDULE | 2A- 2D |
| GENERAL NOTES AND SPECIAL NOTES | 2E – 2G |
| TABULATED QUANTITIES | 2H – 2I |
| PROPERTY MAPS AND RIGHT-OF-WAY ACQUISITION TABLES | 3 - 3A |
| PRESENT LAYOUTS | 4 - 8 |
| PROPOSED LAYOUT & PROFILE SHEETS | 4A – 8A |
| PROFILES OF ENTRANCES | 9 |
| DRAINAGE MAP | 10 |
| CULVERT SECTIONS | 11 – 11B |
| EROSION PREVENTION AND SEDIMENT CONTROL (EPSC) PLANS | 12 – 12P |
| TRAFFIC CONTROL PLANS WITH CONSTRUCTION PHASING NOTES | 13 – 13A |
| SOILS SHEETS | 14 – 14G |
| ROADWAY CROSS SECTIONS | 15 - 46 |
| STORM WATER POLLUTION PREVENTION PLAN (SWPPP) INDEX | S-1 |
| UTILITY SHEETS | U1-1 – U1-4 |


## STANDARD BRIDGE DRAWINGS

| DWG. NO. | REV. | DESCRIPTION |
|---|---|---|
| **BRIDGE APPURTENANCES ENGLISH (LRFD BOX CULVERTS)** | | |
| STD-17-1 | | INDEX OF DRAWINGS |
| STD-17-2 | | TERMINOLOGY |
| STD-17-3 | | GENERAL NOTES |
| STD-17-4 | | DESIGN SECTION LIMITS |
| STD-17-5 | | TYPICAL SECTION AND DETAILS |
| STD-17-6 | | TYPICAL ELEVATIONS |
| STD-17-7 | | CURB, RAIL & EDGE BEAM DETAILS - SKEW NOT LESS THAN 45 DEG |
| STD-17-9 | | INTERIOR WALL END TREATMENTS |
| STD-17-10 | | TYPICAL WINGWALL DETAILS AND NOTES |
| STD-17-14 | | WINGWALL DIMENSIONS AND QUANTITIES |
| STD-17-15 | | WINGWALL & SPECIAL RETAINING WALL DESIGN SECTIONS |
| STD-17-16 | | WINGWALL DESIGN SECTION |
| STD-17-17 | | BACKFILL AND DRAINAGE DETAILS |
| STD-17-18 | | BACKFILL DETAILS |
| STD-17-23 | | SIDEWALK AND MISCELLANEOUS DETAILS |
| STD-17-24 | | WARPED SLOPE DETAIL |
| STD-17-29 | | PRECAST BOX CULVERT DETAILS |
| STD-17-52 | | BOX BRIDGE, 1 BARREL AT 8', CLEAR HTS. 3' - 5', 0 - 60' FILL |

# STANDARD ROADWAY DRAWINGS

| DWG. NO | REV. | DESCRIPTION |
|---|---|---|
| **ROADWAY DESIGN STANDARDS** | | |
| RD-A-1 | 12-18-99 | STANDARD ABBREVIATIONS |
| RD-L-1 | 10-26-94 | STANDARD LEGEND |
| RD-L-2 | 09-05-01 | STANDARD LEGEND FOR UTILITY INSTALLATIONS |
| RD-L-5 | 05-01-08 | STANDARD LEGEND FOR EROSION PREVENTION AND SEDIMENT CONTROL |
| RD-L-6 | 03-30-10 | STANDARD LEGEND FOR EROSION PREVENTION AND SEDIMENT CONTROL |
| RD-L-7 | 05-24-12 | STANDARD LEGEND FOR EROSION PREVENTION AND SEDIMENT CONTROL |
| RD01-S-11 | 04-04-03 | DESIGN AND CONSTRUCTION DETAILS FOR ROADSIDE SLOPE DEVELOPMENT |
| RD01-S-11A | 10-15-02 | ROADSIDE DITCH DETAILS FOR DESIGN AND CONSTRUCTION |
| RD01-SD-1 | | INTERSECTION SIGHT DISTANCE DESIGN AND GENERAL NOTES |
| RD01-SD-2 | | INTERSECTION SIGHT DISTANCE LANDSCAPE AND OBSTRUCTION |
| RD01-SD-3 | | INTERSECTION SIGHT DISTANCE 2-LANE ROADWAYS |
| RD01-SE-3 | 10-15-02 | RURAL SUPERELEVATION DETAILS |
| RD01-TS-1 | 10-15-02 | DESIGN STANDARDS FOR LOCAL ROADS AND STREETS |
| **DRAINAGE - CULVERTS AND ENDWALL** | | |
| D-PB-1 | 01-02-13 | STANDARD DETAILS CLASS "B" BEDDING AND CULVERT EXCAVATION |
| D-PB-2 | 01-29-14 | STANDARD DETAILS FOR FLEXIBLE PIPE INSTALLATION |
| D-PB-3 | | INDUCED TRENCH SOIL EMBANKMENT FOR PIPE CULVERT INSTALLATION |
| D-PE-1 | 02-12-76 | TYPE "A" CONCRETE ENDWALL 2:1 SLOPE, 36" TO 78" |
| D-PE-4 | 01-15-13 | STRAIGHT CONCRETE ENDWALL |
| D-PE-24A | 06-14-13 | 24" CONCRETE ENDWALL CROSS DRAIN |
| D-PE-24B | | 24" CONCRETE ENDWALL CROSS DRAIN |
| D-PE-30A | 06-14-13 | 30" CONCRETE ENDWALL CROSS DRAIN |
| D-PE-30B | | 30" CONCRETE ENDWALL CROSS DRAIN |
| D-PE-99 | 05-20-14 | PIPE GRATE & SKEWED CONNECTION DETAILS FOR "U" ENDWALLS |
| **ROADWAY AND PAVEMENT APPURTENANCES** | | |
| RP-I-5 | 12-18-96 | EXAMPLES OF STREET AND ALLEY INTERSECTIONS |
| RP-MC-2 | 02-28-02 | STANDARD 6" SLOPING (MOUNTABLE) CONCRETE CURBS AND CONCRETE CURBS AND GUTTERS |
| RP-R-1 | 05-27-01 | STANDARD RAMPS TO SIDE ROADS |

| DWG. NO | REV. | DESCRIPTION |
|---|---|---|
| **SAFETY APPURTENANCES AND FENCE** | | |
| S-F-1 | 05-24-12 | HIGH VISIBILITY FENCE |
| S-RP-2 | 01-19-99 | STANDARD CONCRETE RIGHT-OF-WAY MARKERS |
| S-CZ-1 | | CLEAR ZONE CRITERIA |
| S-PL-1 | | SAFETY PLAN AT ROADSIDE HAZARDS |
| S-PL-6 | | SAFETY PLAN SAFETY HARDWARE PLACEMENT |
| S-GR31-1 | | W-BEAM GUARDRAIL |
| S-GRT-3 | | TYPE 21 GUARDRAIL TERMINAL |
| S-GRT-3D | | TYPE 21 GUARDRAIL TERMINAL (DETAILS) |
| S-GRT-3P | | EARTH PAD FOR TYPE 21 TERMINAL |
| S-GRT-4 | 11-06-14 | TYPE 13 GUARDRAIL TERMINAL (TRAILING END) |
| S-GRA-3 | | GUARDRAIL ANCHOR FOR TYPE 12, 13 AND IN-LINE TERMINALS |
| **TRAFFIC CONTROL APPURTENANCES** | | |
| T-M-1 | 07-24-14 | DETAILS OF PAVEMENT MARKINGS FOR CONVENTIONAL ROADS AND MARKING ABBREVIATIONS |
| T-M-2 | 07-24-14 | DETAILS OF PAVEMENT MARKINGS FOR CONVENTIONAL ROADS |
| T-M-3 | 07-24-14 | DETAILS OF PAVEMENT MARKINGS FOR CONVENTIONAL ROADS |
| T-M-4 | 07-24-14 | STANDARD INTERSECTION PAVEMENT MARKINGS |
| T-S-17 | 07-19-13 | STANDARD GROUND MOUNTED SIGN USING PERFORATED/KNOCKOUT SQUARE TUBE |
| T-S-18 | 02-14-14 | END OF ROADWAY AND DEAD END SIGNS, METAL BARRICADES (TYPE III) & WORK ZONE SPEED SIGNS |
| T-S-19 | 07-19-13 | STANDARD STEEL SIGN SUPPORTS |
| T-S-20 | 11-01-11 | SIGN DETAILS |
| **EROSION PREVENTION AND SEDIMENT CONTROL** | | |
| EC-STR-2 | 08-01-12 | SEDIMENT FILTER BAG |
| EC-STR-3B | 08-01-12 | SILT FENCE |
| EC-STR-3C | 08-01-12 | SILT FENCE WITH WIRE BACKING |
| EC-STR-3E | 04-01-08 | SILT FENCE FABRIC JOINING DETAILS |
| EC-STR-6 | 08-01-12 | ROCK CHECK DAM |
| EC-STR-6A | 08-01-12 | ENHANCED ROCK CHECK DAM |
| EC-STR-11 | 08-01-12 | CULVERT PROTECTION TYPE 1 |
| EC-STR-11A | 08-01-12 | CULVERT PROTECTION TYPE 2 |
| EC-STR-25 | 08-01-12 | TEMPORARY CULVERT CROSSING, CONSTRUCTION EXIT, CONSTRUCTION FORD |
| EC-STR-27 | 08-01-12 | TEMPORARY SLOPE DRAIN AND BERM |
| EC-STR-31 | 08-01-12 | TEMPORARY DIVERSION CHANNELS |
| EC-STR-31A | 04-01-08 | TEMPORARY DIVERSION CHANNEL DESIGN |
| EC-STR-35 | 08-01-12 | FILTER BERMS |
| EC-STR-37 | 06-10-14 | SEDIMENT TUBE |

UNOFFICIAL SET

NOT FOR BIDDING

SEALED BY

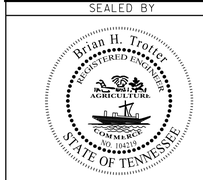


STATE OF TENNESSEE
DEPARTMENT OF TRANSPORTATION

INDEX AND STANDARD DRAWINGS

4/28/2015 8:59:54 AM
H:\lil6003\Dgn\001a.sht

| TYPE | YEAR | PROJECT NO. | SHEET NO. |
|---|---|---|---|
| CONST. | 2015 | 25945-3477-04 | 1B |
| | | | |
| | | | |
| | | | |

**TENNESSEE DEPARTMENT OF TRANSPORTATION**

County: Fentress  PIN: 117511.0  Route: SIA

Termini: Industrial Access Road serving Clarkrange Regional Business Park

# Project Commitments Plan Sheet

| Commitment ID | Source Division | Description | Sta./ Location | Complete |
|---|---|---|---|---|
| EDEC001 | Environmental Division, Ecology | Due to concerns for rare plant species, a wetland plant survey is required for all wetlands within the project limits. Botanists will survey the area in May-June 2014. TDOT Ecology will submit the results to TDEC upon completion. | Entire project area | X<br>June 2014 |

**UNOFFICIAL SET**

**NOT FOR BIDDING**

SEALED BY

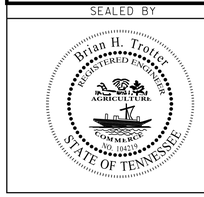


STATE OF TENNESSEE
DEPARTMENT OF TRANSPORTATION

PROJECT COMMITMENTS

2/9/2015 12:58:50 PM
H:\IIG003\Dgn\00lb.sht

| TYPE | YEAR | PROJECT NO. | SHEET NO. |
|---|---|---|---|
| CONST. | 2015 | 25945-3477-04 | 2 |

## ESTIMATED ROADWAY QUANTITIES

| | ITEM NO. | DESCRIPTION | UNIT | QUANTITY |
|---|---|---|---|---|
| | 105-01 | CONSTRUCTION STAKES, LINES AND GRADES | LS | 1 |
| | 201-01 | CLEARING AND GRUBBING | LS | 1 |
| (1) | 202-01 | REMOVAL OF STRUCTURES AND OBSTRUCTIONS | LS | 1 |
| | | | | |
| (2) | 203-01 | ROAD & DRAINAGE EXCAVATION (UNCLASSIFIED) | C.Y. | 36119 |
| | 203-01.11 | PRESPLITTING OF ROCK EXCAVATION | S.Y. | 450 |
| | 203-02.01 | BORROW EXCAVATION (GRADED SOLID ROCK) | TON | 1951 |
| | | | | |
| | 203-06 | WATER | M.G. | 239 |
| | | | | |
| | 204-08 | FOUNDATION FILL MATERIAL | C.Y. | 21 |
| | | | | |
| (3) | 209-01.31 | TEMPORARY MULCH FILTER BERM | C.Y. | 1090 |
| (3) | 209-05 | SEDIMENT REMOVAL | C.Y. | 21 |
| (3) | 209-08.02 | TEMPORARY SILT FENCE (WITH BACKING) | L.F. | 4505 |
| (3) | 209-08.03 | TEMPORARY SILT FENCE (WITHOUT BACKING) | L.F. | 8360 |
| (3) | 209-08.07 | ROCK CHECK DAM | EACH | 73 |
| (3) | 209-08.08 | ENHANCED ROCK CHECK DAM | EACH | 31 |
| (3)(6) | 209-09.01 | SANDBAGS | BAG | 800 |
| (3) | 209-09.03 | SEDIMENT FILTER BAG (15'X15') | EACH | 3 |
| (3) | 209-20.03 | POLYETHYLENE SHEETING (6 MIL. MINIMUM) | S.Y. | 300 |
| (3) | 209-65.03 | TEMPORARY DIVERSION CHANNEL | L.F. | 195 |
| | | | | |
| | 303-01 | MINERAL AGGREGATE, TYPE A BASE, GRADING D | TON | 14341 |
| | 303-01.01 | GRANULAR BACKFILL (ROADWAY) | TON | 248 |
| | | | | |
| (3) | 303-10.01 | MINERAL AGGREGATE (SIZE 57) | TON | 38 |
| | 307-01.01 | ASPHALT CONCRETE MIX (PG64-22) (BPMB-HM) GRADING A | TON | 2522 |
| | 307-01.08 | ASPHALT CONCRETE MIX (PG64-22) (BPMB-HM) GRADING B-M2 | TON | 1689 |
| | | | | |
| | 402-01 | BITUMINOUS MATERIAL FOR PRIME COAT (PC) | TON | 23 |
| | 402-02 | AGGREGATE FOR COVER MATERIAL (PC) | TON | 91 |
| | 403-01 | BITUMINOUS MATERIAL FOR TACK COAT (TC) | TON | 9 |
| | 404-01.01 | BITUMINOUS MATERIAL (DBST) | TON | 17 |
| | 404-01.02 | MINERAL AGGREGATE (DBST) | TON | 131 |
| | 411-01.10 | ACS MIX(PG64-22) GRADING D | TON | 994 |
| | | | | |
| | 604-01.01 | CLASS A CONCRETE (ROADWAY) | C.Y. | 80 |
| | 604-01.02 | STEEL BAR REINFORCEMENT (ROADWAY) | LB. | 15637 |
| | | | | |
| | 607-05.02 | 24" CONCRETE PIPE CULVERT (CLASS III) | L.F. | 159 |
| | 607-06.02 | 30" CONCRETE PIPE CULVERT (CLASS III) | L.F. | 60 |
| | 607-39.01 | 15" PIPE CULVERT (SIDE DRAIN) | L.F. | 58 |
| (3) | 607-41.03 | 18" SLOPE DRAIN PIPE | L.F. | 300 |
| | | | | |
| | 611-07.01 | CLASS A CONCRETE (PIPE ENDWALLS) | C.Y. | 8 |
| | 611-07.02 | STEEL BAR REINFORCEMENT (PIPE ENDWALLS) | LB. | 222 |
| | 611-07.57 | 24IN ENDWALL (CROSS DRAIN) 3:1 | EACH | 4 |
| | 611-07.60 | 30IN ENDWALL (CROSS DRAIN) 3:1 | EACH | 2 |
| | | | | |
| | 702-01.01 | EXTRUDED MOUNTABLE CURB | L.F. | 265 |
| | | | | |
| | 705-02.02 | SINGLE GUARDRAIL (TYPE 2) | L.F. | 595 |
| | 705-04.04 | GUARDRAIL TERMINAL (TYPE 21) | EACH | 8 |
| | | | | |
| (3) | 707-08.11 | HIGH-VISIBILITY CONSTRUCTION FENCE | L.F. | 3230 |
| | | | | |
| (3) | 709-05.05 | MACHINED RIP-RAP (CLASS A-3) | TON | 200 |
| (3) | 709-05.06 | MACHINED RIP-RAP (CLASS A-1) | TON | 239 |
| (3)(6) | 709-05.08 | MACHINED RIP-RAP (CLASS B) | TON | 1059 |
| | | | | |

## ESTIMATED ROADWAY QUANTITIES

| | ITEM NO. | DESCRIPTION | UNIT | QUANTITY |
|---|---|---|---|---|
| | | | | |
| | | | | |
| | 712-01 | TRAFFIC CONTROL | LS | 1 |
| | 712-04.01 | FLEXIBLE DRUMS (CHANNELIZING) | EACH | 5 |
| | 712-06 | SIGNS (CONSTRUCTION) | S.F. | 83 |
| | 712-07.03 | TEMPORARY BARRICADES (TYPE III) | L.F. | 48 |
| | | | | |
| (8) | 713-16.20 | SIGNS (R1-1, 36"X36" (STOP)) | EACH | 1 |
| (8) | 713-16.21 | SIGNS (W14-1, 36"X36" (DEAD END)) | EACH | 1 |
| (8) | 713-16.22 | SIGNS (OM4-1, 18"X18" (END OF ROAD MARKER)) | EACH | 2 |
| (8) | 713-16.23 | SIGNS (W8-3, 36"X36" (PAVEMENT ENDS)) | EACH | 1 |
| (8) | 713-16.24 | SIGNS (W16-2P, 24"X18" (500 FEET)) | EACH | 1 |
| (8) | 713-16.25 | SIGNS (R2-1, 24"X30" (SPEED LIMIT 30)) | EACH | 4 |
| | | | | |
| (4)(8) | 716-02.04 | PLASTIC PAVEMENT MARKING(CHANNELIZATION STRIPING) | S.Y. | 14 |
| (4)(8) | 716-02.05 | PLASTIC PAVEMENT MARKING (STOP LINE) | L.F. | 38 |
| (4)(8) | 716-02.06 | PLASTIC PAVEMENT MARKING (TURN LANE ARROW) | EACH | 4 |
| | | | | |
| (8) | 716-05.01 | PAINTED PAVEMENT MARKING (4" LINE) | L.M. | 4.0 |
| | | | | |
| | 717-01 | MOBILIZATION | L.S. | 1 |
| | | | | |
| (3)(7) | 740-10.03 | GEOTEXTILE (TYPE III)(EROSION CONTROL) | S.Y. | 1468 |
| | 740-10.04 | GEOTEXTILE (TYPE IV)(STABILIZATION) | S.Y. | 2349 |
| | | | | |
| (3) | 740-11.03 | TEMPORARY SEDIMENT TUBE 18IN (EROSION CONTROL) | L.F. | 6910 |
| | | | | |
| | 801-01.07 | TEMPORARY SEEDING (WITH MULCH) | UNIT | 350 |
| | | | | |
| (5) | 801-03 | WATER (SEEDING & SODDING) | M.G. | 227 |
| | 803-01 | SODDING (NEW SOD) | S.Y. | 19123 |
| | | | | |
| | | | | |
| | | | | |
| | | | | |
| | | | | |
| | | | | |
| | | | | |
| | | | | |

(1) SEE SHEET 2H FOR TABULATION OF ITEMS TO BE REMOVED

(2) INCLUDES 28 CY FOR EPSC MEASURES, 80 CY FOR CULVERT EXCAVATION AND 1106 CY FOR UNDERCUTTING IN WETLANDS

(3) SEE SUBSECTION 209.07 OF THE STANDARD SPECIFICATIONS FOR MAINTENANCE REPLACEMENT. ALL QUANTITIES ARE TO BE USED AS DIRECTED BY THE ENGINEER.

(4) CONTRACTOR MAY ELECT TO SUBSTITUTE PREFORMED PLASTIC FOR THERMOPLASTIC. PREFORMED PLASTIC SHALL BE PAID FOR AT THE SAME UNIT PRICE AS BID TO THERMOPLASTIC.

(5) INCLUDES 35 MG FOR EPSC MEASURES

(6) TO BE USED FOR TEMPORARY DIVERSION CHANNEL

(7) INCLUDES 726 SY FOR TEMPORARY DIVERSION CHANNEL

(8) SEE PROPOSED LAYOUT SHEETS 4A-8A FOR SIGNING AND MARKING INFORMATION

**UNOFFICIAL SET**

**NOT FOR BIDDING**

SEALED BY

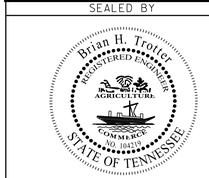


STATE OF TENNESSEE
DEPARTMENT OF TRANSPORTATION

ESTIMATED QUANTITIES

2/9/2015 12:59:25 PM
H:\ll6003\Dgn\002.sht

| TYPE | YEAR | PROJECT NO. | SHEET NO. |
|---|---|---|---|
| R.O.W. | 2014 | 25945-2477-04 | 2 |
| CONST. | 2015 | 25945-3477-04 | 2A |
| | | | |
| | | | |

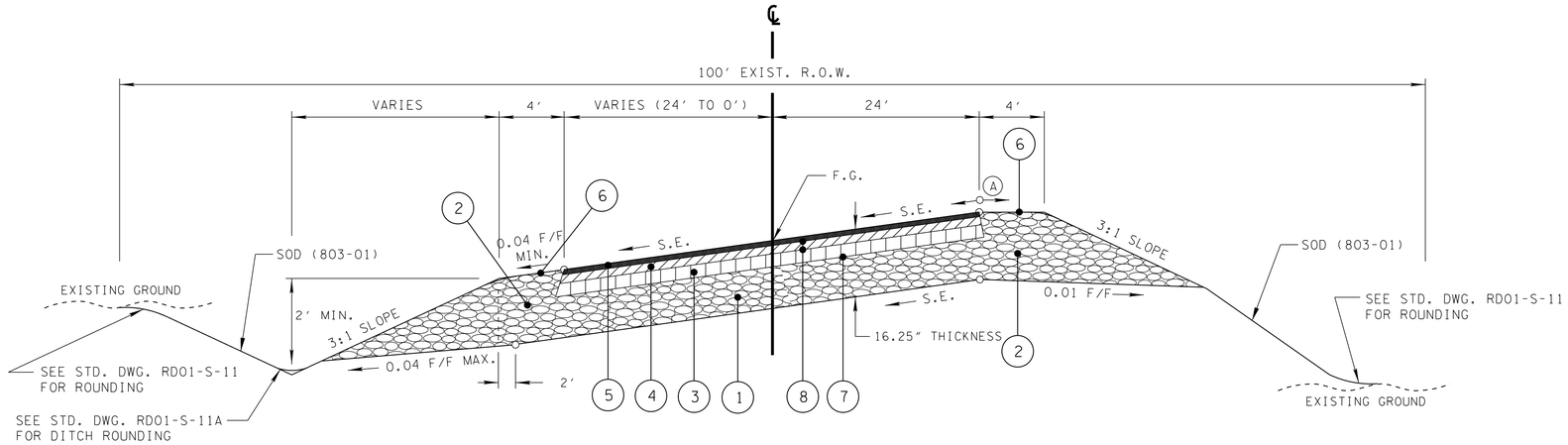


## INTERNATIONAL BLVD. SUPERELEVATED SECTION

(BASED ON STD. DWG. RD01-TS-1)

## STA. 12+00.00 TO STA. 15+00.00

(A) THE SLOPES OF THE SHOULDER AND ROADWAY PAVEMENT SHALL NOT EXCEED AN ALGEBRAIC DIFFERENCE OF 0.07.

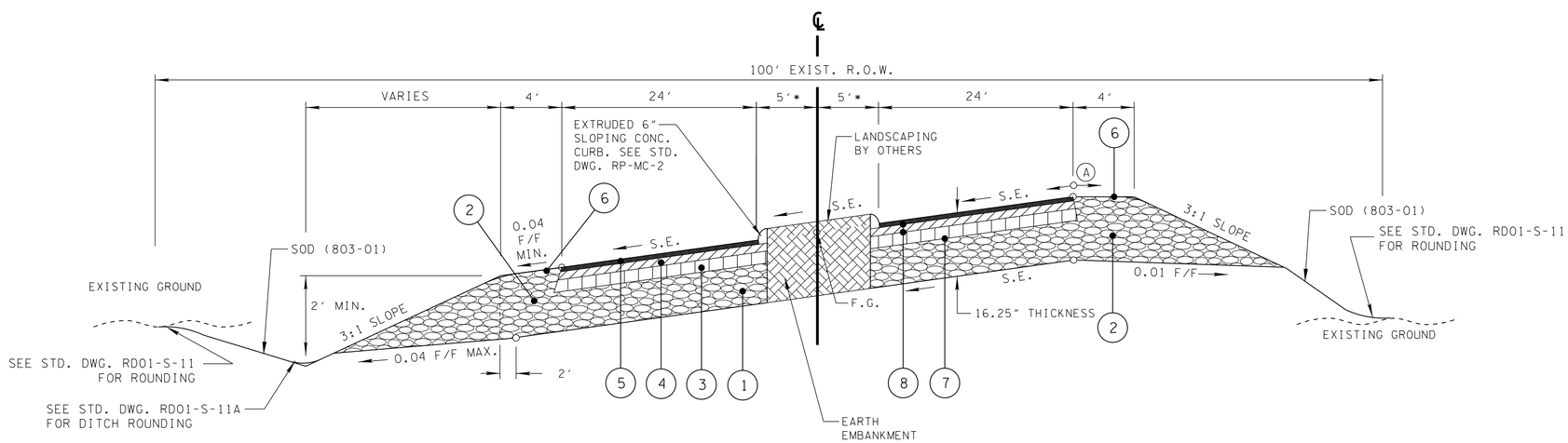


## INTERNATIONAL BLVD. SUPERELEVATED SECTION

(BASED ON STD. DWG. RD01-TS-1)

## STA. 10+12.62 TO STA. 11+00.00

## STA. 11+00.00 TO STA. 12+00.00

* VARIES 5' TO 0' FROM STA. 11+00.00 TO STA. 12+00.00

NOTE: SEE SHEET 4A FOR CURBED ISLAND DETAIL

**UNOFFICIAL SET**

**NOT FOR BIDDING**

SEALED BY

STATE OF TENNESSEE
DEPARTMENT OF TRANSPORTATION

# TYPICAL SECTIONS

2/9/2015 1:00:38 PM
H:\116003\Dgn\002a.sht

| TYPE | YEAR | PROJECT NO. | SHEET NO. |
|---|---|---|---|
| R.O.W. | 2014 | 25945-2477-04 | 2A |
| CONST. | 2015 | 25945-3477-04 | 2B |
| | | | |
| | | | |

REV 01-15-15: REVISED STATION RANGE OF TOP TYPICAL

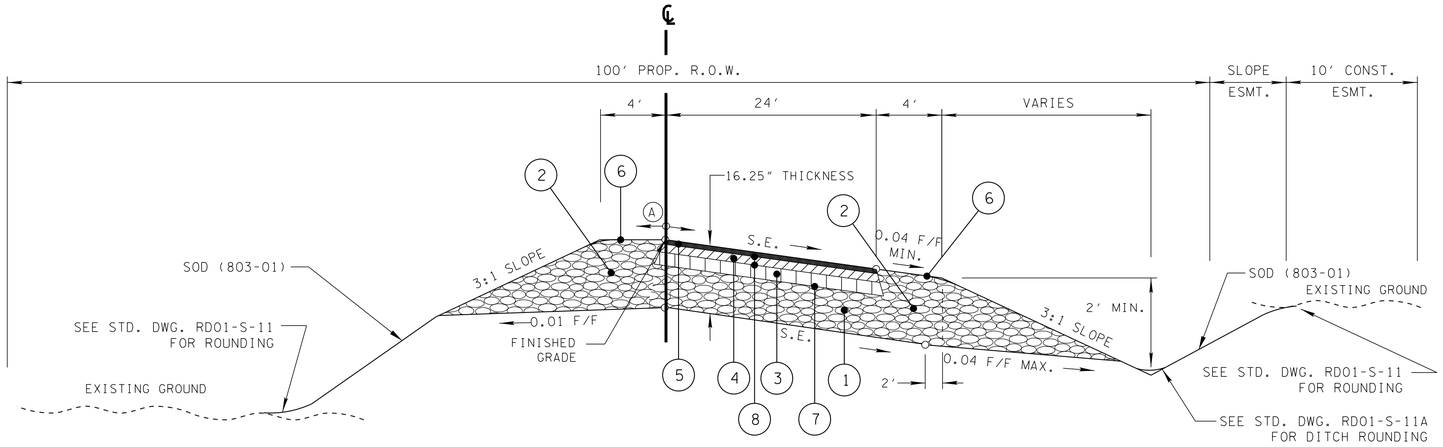


## INTERNATIONAL BLVD. SUPERELEVATED SECTION

STA. 44+68.76 TO STA. 50+50.00
STA. 52+25.00 TO STA. 58+13.16

(A) THE SLOPES OF THE SHOULDER AND ROADWAY PAVEMENT SHALL NOT EXCEED AN ALGEBRAIC DIFFERENCE OF 0.07.

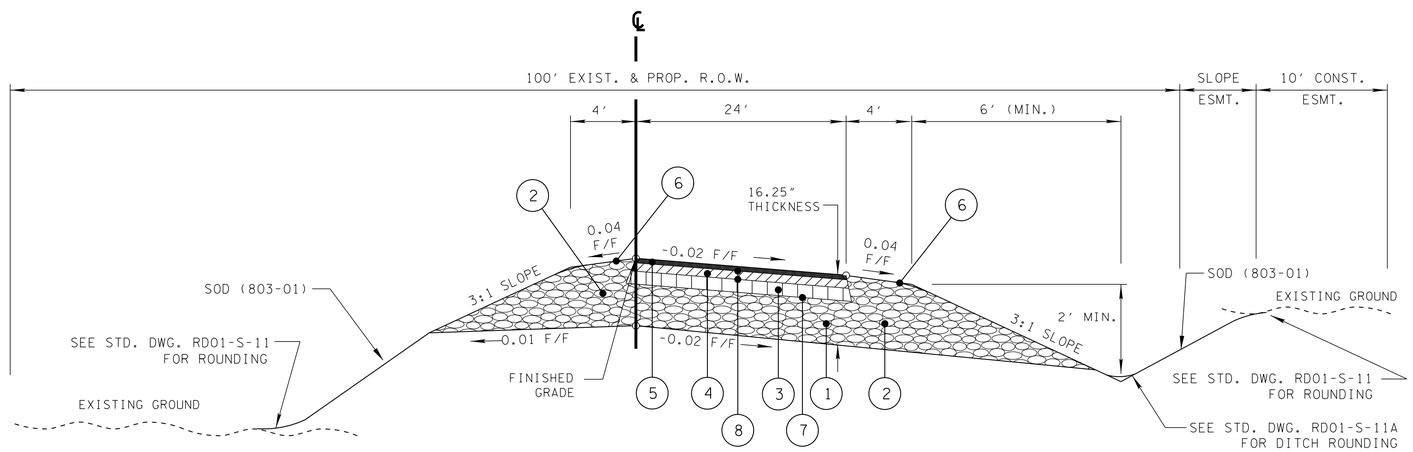


## INTERNATIONAL BLVD. TANGENT SECTION

STA. 15+00.00 TO STA. 44+68.76
STA. 58+13.16 TO STA. 61+00.00

**UNOFFICIAL SET**

**NOT FOR BIDDING**

SEALED BY

STATE OF TENNESSEE
DEPARTMENT OF TRANSPORTATION

# TYPICAL SECTIONS

2/9/2015 1:00:39 PM
H:\II6003\Dgn\002b.sht

| TYPE | YEAR | PROJECT NO. | SHEET NO. |
|---|---|---|---|
| R.O.W. | 2014 | 25945-2477-04 | 2B |
| CONST. | 2015 | 25945-3477-04 | 2C |
| | | | |
| | | | |

REV 01-15-15: ADDED SHEET

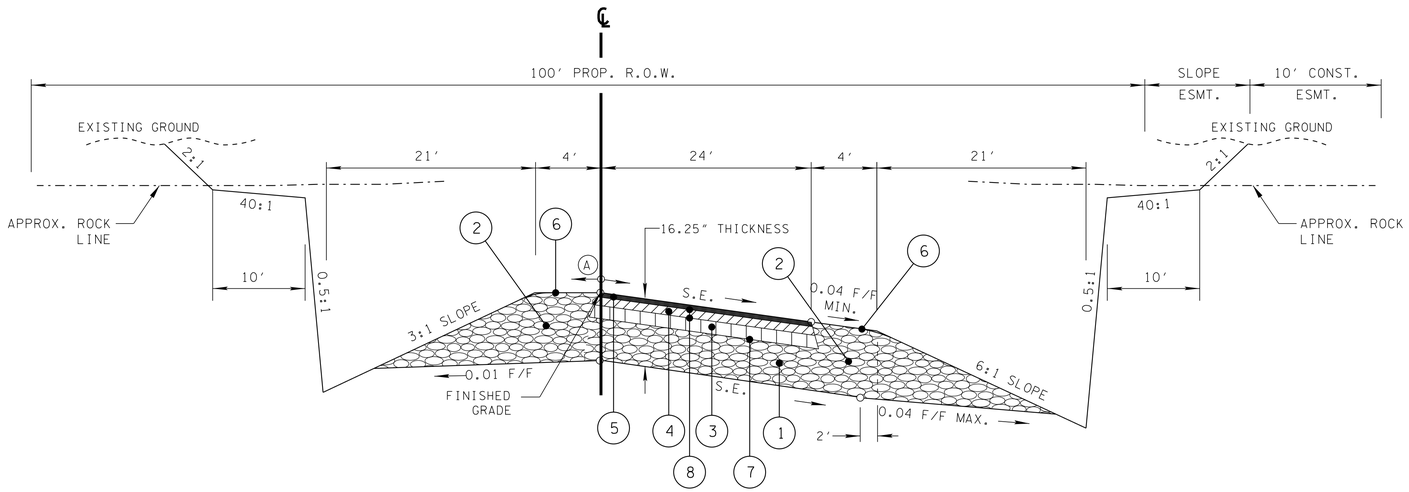


INTERNATIONAL BLVD. SUPERELEVATED SECTION

STA. 50+50.00 TO STA. 52+25.00

(A) THE SLOPES OF THE SHOULDER AND ROADWAY PAVEMENT SHALL NOT EXCEED AN ALGEBRAIC DIFFERENCE OF 0.07.

**UNOFFICIAL SET**

**NOT FOR BIDDING**

SEALED BY

STATE OF TENNESSEE
DEPARTMENT OF TRANSPORTATION

# TYPICAL SECTIONS

2/9/2015 1:00:39 PM
H:\11600 3\Dgn\002c.sht

| TYPE | YEAR | PROJECT NO. | SHEET NO. |
|---|---|---|---|
| R.O.W. | 2014 | 25945-2477-04 | 2C |
| CONST. | 2015 | 25945-3477-04 | 2D |
| | | | |
| | | | |

REV 12-05-14: REVISED UNDERCUT LIMITS FOR WTL-4

REV 01-15-15: CHANGED ROW SHEET NUMBER

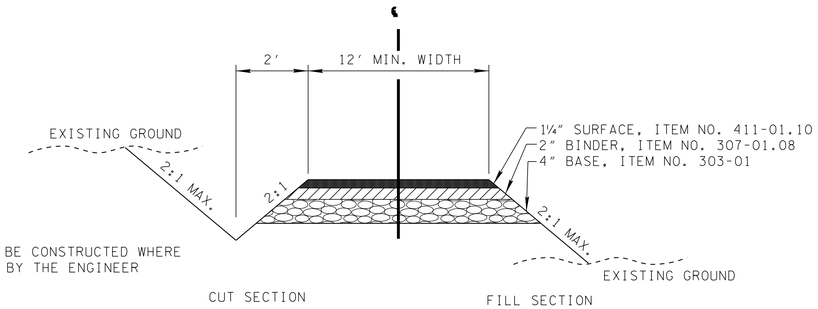


NOTE: DITCH TO BE CONSTRUCTED WHERE DIRECTED BY THE ENGINEER

TYPICAL SECTION FIELD ENTRANCE

## PROPOSED PAVEMENT SCHEDULE

| | |
|---|---|
| (1) | **10" MINERAL AGGREGATE BASE (ROADWAY)**<br>ITEM 303-01 MINERAL AGGREGATE, TYPE A BASE, GRADING D |
| (2) | **16 ¼" MINERAL AGGREGATE BASE (SHOULDER)**<br>ITEM 303-01 MINERAL AGGREGATE, TYPE A BASE, GRADING D |
| (3) | **3" BITUMINOUS BASE (ROADWAY) (APPROX. 345 LB/YD²)**<br>ITEM 307-01.01 ASPHALT CONCRETE MIX (PG64-22)(BPMB-HM) GRADING A |
| (4) | **2" BITUMINOUS BINDER (ROADWAY) (APPROX. 226 LB/YD²)**<br>ITEM 307-01.08 ASPHALT CONCRETE MIX (PG64-22)(BPMB-HM) GRADING B-M2 |
| (5) | **1 ¼ " BITUMINOUS SURFACE (ROADWAY) (APPROX. 132.5 LB/YD²)**<br>ITEM 411-01.10 ACS MIX (PG64-22) GRADING D |
| (6) | **DOUBLE BITUMINOUS SURFACE TREATMENT (SHOULDER)**<br>ITEM 404-01.01 BITUMINOUS MATERIAL FOR DOUBLE BITUMINOUS SURFACE TREATMENT (DBST) (RATE 0.68-0.84 GAL/YD$^2$)<br>ITEM 404-01.02 MINERAL AGGREGATE FOR DOUBLE BITUMINOUS SURFACE TREATMENT (DBST) (RATE 40-58 LB/YD$^2$) |
| (7) | **PRIME COAT**<br>ITEM 402-01 BITUMINOUS MATERIAL FOR PRIME COAT (PC)(RATE 0.30-0.35 GAL/YD$^2$)<br>ITEM 402.02 AGGREGATE FOR COVER MATERIAL (PC)(RATE 8-12 LB/YD$^2$) |
| (8) | **TACK COAT**<br>ITEM 403-01 BITUMINOUS MATERIAL FOR TACK COAT (TC)(RATE 0.07 GAL/YD$^2$) |

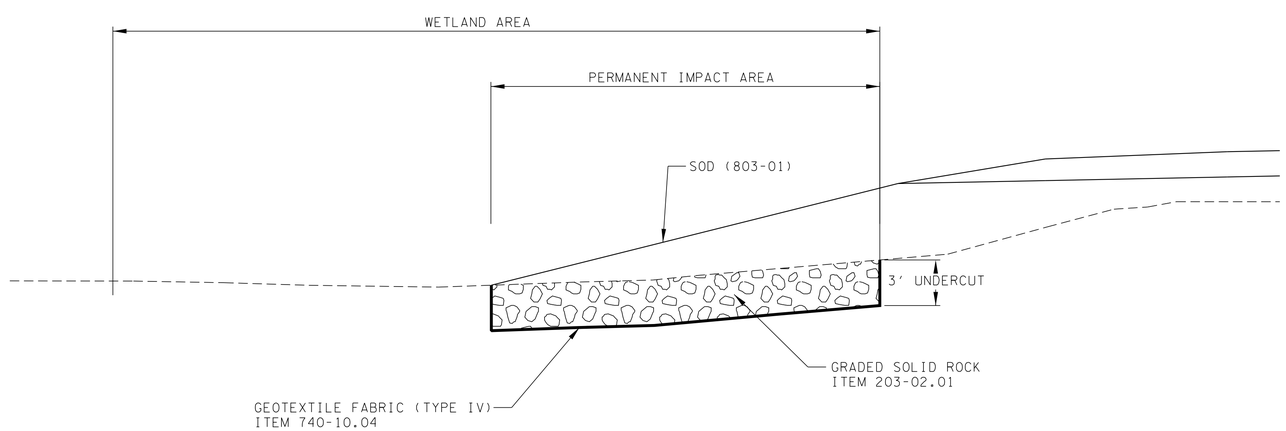


UNDERCUTTING IN WETLAND IMPACT AREAS

STA. 10+88.65 TO STA. 12+05.96 RT. (WTL-1)
STA. 14+59.19 TO STA. 19+78.07 RT. (WTL-3)
STA. 18+41.45 TO STA. 19+03.38 LT. (WTL-2)
STA. 44+47.70 TO STA. 46+06.13 RT. (WTL-4)

**UNOFFICIAL SET**

**NOT FOR BIDDING**

SEALED BY

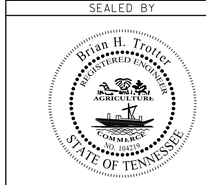


STATE OF TENNESSEE
DEPARTMENT OF TRANSPORTATION

TYPICAL SECTIONS AND PAVEMENT SCHEDULE

2/9/2015 1:00:40 PM
H:\Ill6003\Dgn\002d.sht

| TYPE | YEAR | PROJECT NO. | SHEET NO. |
|---|---|---|---|
| CONST. | 2015 | 25945-3477-04 | 2E |
| | | | |
| | | | |
| | | | |

# GENERAL NOTES

## GRADING

(1) ANY AREA THAT IS DISTURBED OUTSIDE LIMITS OF CONSTRUCTION DURING THE LIFE 0F THIS PROJECT SHALL BE REPAIRED BY THE CONTRACTOR AT HIS EXPENSE.

(2) THE CONTRACTOR SHALL NOT DISPOSE OF ANY MATERIAL EITHER ON OR OFF STATE-OWNED R.O.W. IN A REGULATORY FLOOD WAY AS DEFINED BY THE FEDERAL EMERGENCY MANAGEMENT AGENCY WITHOUT APPROVAL BY SAME. ALL MATERIAL SHALL BE DISPOSED OF IN UPLAND (NON-WETLAND) AREAS AND ABOVE ORDINARY HIGH WATER OF ANY ADJACENT WATERCOURSE. THIS DOES NOT ELIMINATE THE NEED TO OBTAIN ANY OTHER LICENSES OR PERMITS THAT MAY BE REQUIRED BY ANY OTHER FEDERAL, STATE OR LOCAL AGENCY.

## SEEDING AND SODDING

(1) SOD SHALL BE PLACED AT LOCATIONS SHOWN ON THE PLANS TO PREVENT DAMAGE TO ADJACENT FACILITIES AND PROPERTY DUE TO EROSION ON ALL NEWLY GRADED CUT AND FILL SLOPES AS WORK PROGRESSES.

## GUARDRAIL

(1) GUARDRAIL IS TO BE COMPLETE IN PLACE BEFORE THE MAINLINE ROADWAY IS OPENED TO TRAFFIC.

## DRAINAGE

(1) THE CONTRACTOR SHALL SHAPE DITCHES TO THE SPECIFIED DESIGN. THIS WORK WILL NOT BE MEASURED AND PAID FOR DIRECTLY, BUT THE COST WILL BE INCLUDED IN THE COST OF OTHER ITEMS.

(2) EXCAVATION FOR CULVERTS WILL NOT BE MEASURED AND PAID FOR DIRECTLY, BUT WILL BE INCLUDED IN THE PRICE BID PER LINEAR FOOT OF PIPE ( PIPE CULVERTS, STORM SEWERS, CONDUITS, ALL OTHER CULVERTS AND MINOR STRUCTURES).

(3) CULVERT EXCAVATION FOR CONCRETE BOX OR SLAB TYPE CULVERTS OR BRIDGES WILL NOT BE MEASURED AND PAID FOR DIRECTLY, BUT THE COST WILL BE INCLUDED IN THE COST OF OTHER ITEMS.

(4) THE CUTTING OF INLET AND OUTLET DITCHES WHERE SHOWN ON PLANS OR AS DIRECTED BY THE ENGINEER WILL BE MEASURED AND PAID FOR AS ITEM NO. 203-01 ROAD AND DRAINAGE EXCAVATION (UNCLASSIFIED).

(5) WHERE A CULVERT (PIPE, SLAB OR BOX) IS MOVED TO A NEW LOCATION OTHER THAN THAT SHOWN ON THE PLANS, INCREASING OR DECREASING THE AMOUNT OF CULVERT EXCAVATION, NO INCREASE OR DECREASE IN THE AMOUNT OF PAYMENT WILL BE MADE DUE TO SUCH CHANGE.

(6) DURING CONSTRUCTION OF DRAINAGE STRUCTURES ALL COST ASSOCIATED WITH MAINTAINING THE FLOW OF WATER AND TRAFFIC, AT THESE STRUCTURES, DURING THE PHASED CONSTRUCTION OF THIS PROJECT ARE TO BE INCLUDED IN THE UNIT PRICE OF THE DRAINAGE STRUCTURES AND TRAFFIC CONTROL ITEMS.

## FENCING

(1) THE CONTRACTOR SHALL GIVE THE AFFECTED PROPERTY OWNERS TWO WEEKS NOTICE PRIOR TO CUTTING FENCES.

## MISCELLANEOUS

(1) NOTHING IN THE GENERAL NOTES OR SPECIAL PROVISIONS SHALL RELIEVE THE CONTRACTOR FROM HIS RESPONSIBILITIES TOWARD THE SAFETY AND CONVENIENCE OF THE GENERAL PUBLIC AND THE RESIDENTS ALONG THE PROPOSED CONSTRUCTION AREA

## PAVEMENT MARKINGS

## FINAL PAVEMENT MARKING IF REFLECTORIZED PAINT IS USED

(1) PERMANENT PAVEMENT LINE MARKINGS SHALL BE REFLECTORIZED PAINT INSTALLED TO PERMANENT STANDARDS AT THE END OF EACH DAY'S WORK. SHORT, UNMARKED SECTIONS SHALL NOT BE ALLOWED. THESE MARKINGS WILL BE MEASURED AND PAID FOR UNDER ITEM NO. 716-05.01 PAINTED PAVEMENT MARKING (4IN LINE), L.M.

## GRADED SOLID ROCK

(1) THE ROCK FILL (GRADED SOLID ROCK) MATERIAL SHALL CONSIST OF SOUND, NON-DEGRADABLE LIMESTONE OR SANDSTONE WITH A MAXIMUM SIZE OF 3'-0". AT LEAST 50% (BY WEIGHT) OF THE ROCK SHALL BE UNIFORMLY DISTRIBUTED BETWEEN 1'-0" AND 3'-0" IN DIAMETER, AND NO GREATER THAN 10% (BY WEIGHT) SHALL BE LESS THAN 2" IN DIAMETER. THE MATERIAL SHALL BE ROUGHLY EQUIDIMENSIONAL; THIN, SLABBY MATERIALS WILL NOT BE ACCEPTED. THE CONTRACTOR SHALL BE REQUIRED TO PROCESS THE MATERIAL WITH AN ACCEPTABLE MECHANICAL MEANS (A SCREENING PROCESS CAPABLE OF PRODUCING THE REQUIRED GRADATION). THE ROCK SHALL BE APPROVED BY A REPRESENTATIVE OF THE DIVISION OF MATERIALS AND TESTS BEFORE USE.

## SIGNING

(1) AFTER THE SIGN LOCATIONS HAVE BEEN STAKED, BUT PRIOR TO ORDERING ANY MATERIAL FOR THE SUPPORTS, THERE SHALL BE A FIELD INSPECTION AND APPROVAL BY THE REGIONAL CONSTRUCTION OFFICE.

(2) THE LETTERS, DIGITS, ARROWS, BORDERS, AND ALPHABET ACCESSORIES ON ALL FLAT SHEET SIGNS SHALL BE APPLIED BY SILK SCREENING PROCESS.

## CONSTRUCTION WORK ZONE & TRAFFIC CONTROL

(1) ADVANCED WARNING SIGNS SHALL NOT BE DISPLAYED MORE THAN FORTY-EIGHT (48) HOURS BEFORE PHYSICAL CONSTRUCTION BEGINS. SIGNS MAY BE ERECTED UP TO ONE WEEK BEFORE NEEDED, IF THE SIGN FACE IS FULLY COVERED.

(2) IF THE CONTRACTOR MOVES OFF THE PROJECT, HE SHALL COVER OR REMOVE ALL UNNEEDED SIGNS AS DIRECTED BY THE ENGINEER. COSTS OF REMOVAL, COVERING, AND REINSTALLING SIGNS SHALL NOT BE MEASURED AND PAID FOR SEPARATELY, BUT ALL COSTS SHALL BE INCLUDED IN THE ORIGINAL UNIT PRICE BID FOR ITEM NO 712-06, SIGNS (CONSTRUCTION) PER SQUARE FOOT.

(3) A LONG TERM BUT SPORADIC USE WARNING SIGN, SUCH AS A FLAGGER SIGN, MAY REMAIN IN PLACE WHEN NOT REQUIRED PROVIDED THE SIGN FACE IS FULLY COVERED.

(4) TRAFFIC CONTROL DEVICES SHALL NOT BE DISPLAYED OR ERECTED UNLESS RELATED CONDITIONS ARE PRESENT NECESSITATING WARNING.

(5) USE OF BARRICADES, PORTABLE BARRIER RAILS, VERTICAL PANELS, AND DRUMS SHALL BE LIMITED TO THE IMMEDIATE AREAS OF CONSTRUCTION WHERE A HAZARD IS PRESENT. THESE DEVICES SHALL NOT BE STORED ALONG THE ROADWAY WITHIN THIRTY (30) FEET OF THE EDGE OF THE TRAVELED WAY BEFORE OR AFTER USE UNLESS PROTECTED BY GUARDRAIL, BRIDGE RAIL, AND/OR BARRIERS INSTALLED FOR OTHER PURPOSES FOR ROADWAYS WITH CURRENT ADT'S LESS THAN 1500 AND DESIGN SPEED OF LESS THAN 60 MPH. THIS DISTANCE SHALL INCREASE TO FORTY-FIVE (45) FEET FOR ROADWAYS WITH CURRENT ADT'S OF 1500 OR GREATER AND DESIGN SPEED OF 60 MPH OR GREATER OR ON THE OUTSIDE OF A HORIZONTAL CURVE. THESE DEVICES SHALL BE REMOVED FROM THE CONSTRUCTION WORK ZONE WHEN THE ENGINEER DETERMINES THEY ARE NO LONGER NEEDED. WHERE THERE IS INSUFFICIENT RIGHT-OF-WAY TO PROVIDE FOR THIS REQUIRED SETBACK, THE CONTRACTOR SHALL DETERMINE THE ALTERNATE LOCATIONS AND REQUEST THE ENGINEER'S APPROVAL TO USE THEM.

(6) THE CONTRACTOR SHALL NOT BE PERMITTED TO PARK ANY VEHICLES OR CONSTRUCTION EQUIPMENT DURING PERIODS OF INACTIVITY, WITHIN THIRTY (30) FEET OF THE EDGE OF PAVEMENT WHEN THE LANE IS OPEN TO TRAFFIC UNLESS PROTECTED BY GUARDRAIL, BRIDGE RAIL, AND/OR BARRIERS INSTALLED FOR OTHER PURPOSES FOR ROADWAYS WITH CURRENT ADT'S LESS THAN 1500 AND DESIGN SPEED OF LESS THAN 60 MPH. THIS DISTANCE SHALL BE INCREASED TO FORTY-FIVE (45) FEET FOR ROADWAYS WITH CURRENT ADT'S OF 1500 OR GREATER AND DESIGN SPEED OF 60 MPH OR GREATER OR ON THE OUTSIDE OF A HORIZONTAL CURVE. PRIVATELY OWNED VEHICLES SHALL NOT BE ALLOWED TO PARK WITHIN THIRTY (30) FEET OF A OPEN TRAFFIC LANE AT ANY TIME UNLESS PROTECTED AS DESCRIBED ABOVE FOR ROADWAYS WITH CURRENT ADT'S LESS THAN 1500 AND DESIGN SPEED OF LESS THAN 60 MPH. THIS DISTANCE SHALL BE INCREASED TO FORTY-FIVE (45) FEET FOR ROADWAYS WITH CURRENT ADT'S OF 1500 OR GREATER AND DESIGN SPEED OF 60 MPH OR GREATER OR ON THE OUTSIDE OF A HORIZONTAL CURVE.. WHERE THERE IS INSUFFICIENT RIGHT-OF-WAY TO PROVIDE FOR THIS REQUIRED SETBACK, THE CONTRACTOR SHALL DETERMINE THE ALTERNATE LOCATIONS AND REQUEST THE ENGINEER'S APPROVAL TO USE THEM.

(7) ALL DETOUR AND CONSTRUCTION SIGNING SHALL BE IN STRICT ACCORDANCE WITH THE MANUAL ON UNIFORM TRAFFIC CONTROL DEVICES.

## EROSION PREVENTION AND SEDIMENT CONTROL

## DISTURBED AREA

(1) AREAS TO BE UNDISTURBED SHALL BE CLEARLY MARKED IN THE FIELD BEFORE CONSTRUCTION ACTIVITIES BEGIN.

(2) PRE-CONSTRUCTION VEGETATIVE GROUND COVER SHALL NOT BE DESTROYED, REMOVED OR DISTURBED (I.E. CLEARING AND GRUBBING INITIATED) MORE THAN 15 CALENDAR DAYS PRIOR TO GRADING OR EARTH MOVING ACTIVITIES UNLESS THE AREA IS MULCHED, SEEDED WITH MULCH, OR OTHER TEMPORARY COVER IS INSTALLED.

(3) CLEARING, GRUBBING, AND OTHER DISTURBANCE TO RIPARIAN VEGETATION SHALL BE LIMITED TO THE MINIMUM NECESSARY FOR SLOPE CONSTRUCTION AND EQUIPMENT OPERATIONS. EXISTING VEGETATION SHOULD BE PRESERVED TO THE MAXIMUM EXTENT POSSIBLE. UNNECESSARY VEGETATION REMOVAL IS PROHIBITED.

(4) ALL DISTURBED AREAS SHALL BE PROPERLY STABILIZED AS SOON AS PRACTICABLE. PRIORITY SHALL BE GIVEN TO FINISHING OPERATIONS AND PERMANENT EPSC MEASURES OVER TEMPORARY EPSC MEASURES ON ALL PROJECTS.

(5) CONSTRUCTION SHALL BE SEQUENCED AND STAGED TO MINIMIZE THE EXPOSURE TIME OF GRADED OR DENUDED SOIL AREAS, PRESERVE TOPSOIL, AND MINIMIZE SOIL COMPACTION.

(6) NO MORE THAN 50 ACRES OF ACTIVE SOIL DISTURBANCE IS ALLOWED AT ANY TIME DURING THE CONSTRUCTION OF THE PROJECT. OFF-SITE BORROW OR WASTE AREAS ARE TO BE INCLUDED IN THE TOTAL DISTURBED AREA IF THE BORROW OR WASTE AREA IS EXCLUSIVE TO THE PROJECT PER TDOT'S WASTE AND BORROW MANUAL.

## SEDIMENT CONTROL

(7) EPSC MEASURES SHALL BE INSTALLED AND FUNCTIONAL PRIOR TO ANY EARTH MOVING OPERATIONS, AND SHALL BE MAINTAINED THROUGHOUT THE CONSTRUCTION PERIOD.

(8) THE CONTRACTOR SHALL ESTABLISH AND MAINTAIN A PROACTIVE METHOD TO PREVENT THE OFF-SITE MIGRATION OR DEPOSIT OF SEDIMENT ON ROADWAYS USED BY THE GENERAL PUBLIC. IF SEDIMENT ESCAPES THE CONSTRUCTION SITE, OFF-SITE ACCUMULATIONS OF SEDIMENT THAT HAVE NOT REACHED A STREAM MUST BE REMOVED AT A FREQUENCY SUFFICIENT TO MINIMIZE OFF-SITE IMPACTS (E.G., FUGITIVE SEDIMENT THAT HAS ESCAPED THE CONSTRUCTION SITE AND HAS COLLECTED IN A STREET MUST BE REMOVED SO THAT IT IS NOT SUBSEQUENTLY WASHED INTO STORM SEWERS AND STREAMS BY THE NEXT RAIN AND/OR SO THAT IT DOES NOT POSE A SAFETY HAZARD TO USERS OF PUBLIC STREETS). ARRANGEMENTS CONCERNING REMOVAL OF SEDIMENT ON ADJOINING PROPERTY MUST BE SETTLED WITH THE ADJOINING PROPERTY OWNER BEFORE REMOVAL OF SEDIMENT.

(9) WATER PUMPED FROM WORK AREAS AND EXCAVATION MUST BE HELD IN SETTLING BASINS OR TREATED BY FILTRATION OR CHEMICAL TREATMENT PRIOR TO ITS DISCHARGE INTO SURFACE WATERS. ALL PHYSICAL AND/OR CHEMICAL TREATMENT WILL BE APPLIED IN ACCORDANCE WITH MANUFACTURER'S GUIDELINES AND FULLY DESCRIBED IN THE EPSC PLANS. WATER MUST BE HELD IN SETTLING BASINS UNTIL AT LEAST AS CLEAR AS THE RECEIVING WATERS. SETTLING BASINS SHALL NOT BE LOCATED CLOSER THAN 20 FEET FROM THE TOP BANK OF A STREAM. SETTLING BASINS AND SEDIMENT TRAPS SHALL BE PROPERLY DESIGNED ACCORDING TO THE SIZE OF THE DRAINAGE AREAS OR VOLUME OF WATER TO BE TREATED. TREATED WATER MUST BE DISCHARGED THROUGH A PIPE OR WELL- VEGETATED OR LINED CHANNEL, SO THAT THE DISCHARGE DOES NOT CAUSE EROSION OR SEDIMENT TRANSPORT. DISCHARGES FROM BASINS AND IMPOUNDMENTS SHALL UTILIZE OUTLET STRUCTURES THAT ONLY WITHDRAW WATER FROM NEAR THE SURFACE OF THE BASIN OR IMPOUNDMENT. DISCHARGES MUST NOT CAUSE AN OBJECTIONABLE COLOR CONTRAST WITH THE RECEIVING STREAM.

(10) CHECK DAMS SHALL BE USED WHERE RUNOFF IS CONCENTRATED. CLEAN ROCK, BRUSH, GABION, OR SANDBAG CHECK DAMS SHALL BE PROPERLY CONSTRUCTED TO REDUCE VELOCITY AND CONTROL EROSION.

(11) FOR AN OUTFALL IN A DRAINAGE AREA OF 10 ACRES OR MORE, A TEMPORARY (OR PERMANENT) SEDIMENT BASIN OR EQUIVALENT CONTROL MEASURES THAT PROVIDES STORAGE FOR A CALCULATED VOLUME OF RUNOFF FROM A MINIMUM 2-YEAR/ 24-HOUR STORM EVENT, SHALL BE PROVIDED UNTIL FINAL STABILIZATION OF THE SITE. THE ENVIRONMENTAL AND ROADWAY DESIGN DIVISIONS MAY BE CONTACTED TO REVIEW AND CONCUR WITH ANY REVISION OF THE SWPPP BEFORE DISTURBANCE OF THE OUTFALL PROCEEDS.

(12) IF PERMANENT OR TEMPORARY VEGETATION IS TO BE USED AS AN EPSC MEASURE, THEN THE TIMING OF PLANTING OF VEGETATION SHALL BE SHOWN IN THE SWPPP. DELAYING PLANTING OF COVER VEGETATION UNTIL WINTER MONTHS OR DRY MONTHS SHOULD BE AVOIDED, IF POSSIBLE.

(13) OFFSITE VEHICLE TRACKING OF SEDIMENTS AND THE GENERATION OF DUST SHALL BE MINIMIZED. A STABILIZED CONSTRUCTION ACCESS (A POINT OF ENTRANCE/EXIT TO THE CONSTRUCTION PROJECT) SHALL BE PROVIDED, AS NEEDED, TO REDUCE THE TRACKING OF MUD AND DIRT ONTO PUBLIC ROADS BY CONSTRUCTION VEHICLES.

(14) TEMPORARY EPSC MEASURES MAY BE REMOVED AT THE BEGINNING OF THE WORKDAY, BUT MUST BE REPLACED AT THE END OF THE WORKDAY.

**UNOFFICIAL SET**

**NOT FOR BIDDING**

SEALED BY

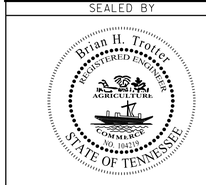


STATE OF TENNESSEE
DEPARTMENT OF TRANSPORTATION

GENERAL NOTES

2/9/2015 10:04 PM
H:\lll6003\Dgn\002e.sht

| TYPE | YEAR | PROJECT NO. | SHEET NO. |
|---|---|---|---|
| CONST. | 2015 | 25945-3477-04 | 2F |
| | | | |
| | | | |
| | | | |

# GENERAL NOTES

## EROSION PREVENTION AND SEDIMENT CONTROL

### STREAM/WETLAND

(15) SOIL MATERIALS MUST BE PREVENTED FROM ENTERING WATERS OF THE STATE/U.S. EPSC MEASURES TO PROTECT WATER QUALITY MUST BE MAINTAINED THROUGHOUT THE CONSTRUCTION PERIOD. APPROPRIATE EPSC MEASURES MUST BE INSTALLED ALONG THE BASE OF ALL FILLS AND CUTS, ON THE DOWNHILL SIDE OF STOCKPILED SOIL, AND ALONG STREAM BANKS IN CLEARED AREAS TO PREVENT SEDIMENT MIGRATION INTO STREAMS IN ACCORDANCE WITH TDOT STANDARDS. THEY MUST BE INSTALLED ON THE CONTOUR, ENTRENCHED AND STAKED, AND EXTEND THE WIDTH OF THE AREA TO BE CLEARED.

(16) NEW CHANNEL CONSTRUCTION SHALL BE COMPLETED IN THE DRY AND STABILIZED FOR AT LEAST 72 HOURS PRIOR TO DIVERTING WATER FROM THE EXISTING AND/OR TEMPORARY CHANNEL.

(17) INSTREAM EPSC DEVICES REQUIRE THE ENVIRONMENTAL DIVISION'S PERMITS SECTION REVIEW AND MUST BE PROCESSED BY THE PERMITS SECTION TO OBTAIN TDEC, USACE, AND TVA PERMITS.

(18) THE OPERATION OF EQUIPMENT IN WATERS OF THE STATE/U.S., INCLUDING WETLANDS, SHALL BE ONLY AS SHOWN ON THE PROJECT PLANS AND/OR AS SO SPECIFIED IN THE ARAP/401, SECTION 404 PERMIT(S) AND/OR TVA26(A), IF APPLICABLE. ANY ADDITIONAL PERMITS REQUIRED BY THE CONTRACTOR'S METHOD OF OPERATION SHALL BE THE RESPONSIBILITY OF THE CONTRACTOR TO OBTAIN, AFTER RECEIVING THE APPROVAL OF TDOT ENVIRONMENTAL DIVISION.

(19) THE WIDTH OF THE FILL ASSOCIATED WITH TEMPORARY CROSSINGS SHALL BE LIMITED TO THE MINIMUM NECESSARY FOR THE ACTUAL CROSSING.

(20) STREAM BEDS SHALL NOT BE USED AS TRANSPORTATION ROUTES FOR CONSTRUCTION EQUIPMENT. TEMPORARY CROSSINGS MUST BE LIMITED TO ONE POINT PER STREAM AND EPSC MEASURES MUST BE USED WHERE THE STREAM BANKS ARE DISTURBED. WHERE THE STREAMBED IS NOT COMPOSED OF BEDROCK, A PAD OF CLEAN ROCK MUST BE USED AT THE CROSSING POINT AND CULVERTED TO PREVENT THE IMPOUNDMENT OF WATER FLOW. CLEAN ROCK IS ROCK OF VARIOUS TYPE AND SIZE, DEPENDING UPON APPLICATION, WHICH CONTAINS NO FINES, SOILS, OR OTHER WASTES OR CONTAMINANTS. OTHER MATERIALS USED FOR ALL TEMPORARY FILLS MUST BE COMPLETELY REMOVED IN THEIR ENTIRETY AFTER THE WORK IS COMPLETED AND THE AFFECTED AREAS RETURNED TO THEIR PREEXISTING ELEVATION. ALL TEMPORARY CROSSINGS MUST BE CONSTRUCTED IN ACCORDANCE WITH STD. DWG. EC-STR-25 UNLESS SPECIFICALLY ADDRESSED IN THE EPSC PLANS. ALTERNATIVELY, PLACING A TEMPORARY BRIDGE (BAILEY BRIDGE OR EQUIVALENT, TIMBERS, ETC.) FROM TOP OF BANK TO TOP OF BANK OR THE APPROPRIATE USE OF BARGES AT THE CROSSING TO AVOID DISTURBANCE OF THE STREAMBED IS AN ACCEPTABLE OPTION.

(21) HEAVY EQUIPMENT WORKING IN WETLANDS MUST BE PLACED ON MATS, OR OTHER MEASURES MUST BE TAKEN TO MINIMIZE SOIL DISTURBANCE UNLESS SPECIFICALLY ADDRESSED IN THE EPSC PLANS. ANY MATS AND OTHER MEASURES USED FOR HEAVY EQUIPMENT MUST BE REMOVED IN THEIR ENTIRETY AFTER THE WORK IS COMPLETED.

(22) WETLANDS SHALL NOT BE USED AS EQUIPMENT STORAGE, STAGING, OR TRANSPORTATION AREAS, UNLESS PROVIDED FOR IN THE PLANS.

### SPECIES

(23) NO ACTIVITY MAY SUBSTANTIALLY DISRUPT THE MOVEMENT OF THOSE SPECIES OF AQUATIC LIFE INDIGENOUS TO THE WATER BODY, INCLUDING THOSE SPECIES THAT NORMALLY MIGRATE THROUGH THE AREA. THE SWPPP SHALL BE MODIFIED TO INCLUDE EPSC MEASURES TO PREVENT NEGATIVE IMPACTS TO LEGALLY PROTECTED STATE OR FEDERAL FAUNA OR FLORA OR AS INDICATED IN THE ECOLOGICAL STUDIES OR ON THE PERMIT(S).

### INSPECTION, MAINTENANCE, REPAIR

(24) EPSC CONTROLS WILL BE MAINTAINED IN ACCORDANCE WITH TDOT STANDARD DRAWINGS AND GOOD ENGINEERING PRACTICES.

(25) INSPECTION, REPAIR, AND MAINTENANCE OF EPSC MEASURES/STRUCTURES IS TO BE PERFORMED ON A REGULAR BASIS. SEDIMENT SHALL BE REMOVED FROM SEDIMENT CONTROL STRUCTURES WHEN THE DESIGN CAPACITY HAS BEEN REDUCED BY FIFTY PERCENT (50%). DURING SEDIMENT REMOVAL, THE CONTRACTOR SHALL TAKE CARE TO ENSURE THAT STRUCTURAL COMPONENTS OF EPSC MEASURES ARE NOT DAMAGED AND THUS MADE INEFFECTIVE. IF DAMAGE DOES OCCUR, THE CONTRACTOR SHALL REPAIR THE STRUCTURES AT THE CONTRACTOR'S OWN EXPENSE.

(26) SEDIMENT REMOVED FROM SEDIMENT CONTROL STRUCTURES SHALL BE PLACED AND BE TREATED IN A MANNER SO THAT THE SEDIMENT IS CONTAINED WITHIN THE PROJECT LIMITS AND DOES NOT MIGRATE INTO WATERS OF THE STATE/U.S. COST FOR THIS TREATMENT IS TO BE INCLUDED IN PRICE BID FOR ITEM NO. 209-05 SEDIMENT REMOVAL, C.Y.

(27) THE CONTRACTOR SHALL INSTALL A RAIN GAUGE EVERY LINEAR MILE AT ALL SITES WHERE CLEARING, GRUBBING, EXCAVATION, GRADING CUTTING OR FILLING IS BEING ACTIVELY PERFORMED, OR EXPOSED SOIL HAS NOT YET BEEN PERMANENTLY STABILIZED. IF THE PROJECT LENGTH IS LESS THAN ONE LINEAR MILE, ONE RAIN GAUGE SHALL BE INSTALLED AT THE CENTER OF THE PROJECT OR AS INDICATED BY THE TDOT EPSC INSPECTOR. THE CONTRACTOR SHALL ENSURE THAT EACH GAUGE IS MAINTAINED IN GOOD WORKING CONDITION. TDOT AND/OR THE CONTRACTOR SHALL RECORD DAILY PRECIPITATION AND FORECASTED PERCENTAGE OF PRECIPITATION IN DETAILED RECORDS OF RAINFALL EVENTS INCLUDING DATES, AMOUNTS OF RAINFALL PER GAUGE, THE ESTIMATED DURATION (OR STARTING AND ENDING TIMES), AND FORECASTED PERCENTAGE OF PRECIPITATION FOR THE PROJECT. THIS INFORMATION SHALL BE PROVIDED TO THE ENGINEER ON A MONTHLY BASIS. THE COST FOR THE RAIN GAUGES IS TO BE INCLUDED IN THE UNIT BID PRICES FOR OTHER ITEMS. RAIN GAUGES SHALL BE AS SPECIFIED IN THE APPROVED TDOT RAINFALL MONITORING PLAN.

(28) INSPECTION OF EPSC MEASURES SHALL BE DONE AT LEAST TWICE PER CALENDAR WEEK AT LEAST 72 HOURS APART. A CALENDAR WEEK IS DEFINED AS SUNDAY THROUGH SATURDAY. QUALITY ASSURANCE/QUALITY CONTROL SITE ASSESSMENT OF EPSC SHALL BE PERFORMED PER THE TDOT ENVIRONMENTAL DIVISION'S COMPREHENSIVE INSPECTION OFFICE GUIDELINES.

(29) OUTFALL POINTS SHALL BE INSPECTED TO ASCERTAIN WHETHER EPSC MEASURES ARE EFFECTIVE IN PREVENTING SIGNIFICANT IMPACTS TO SURROUNDING WATERS. WHERE DISCHARGE LOCATIONS ARE INACCESSIBLE, NEARBY DOWNSTREAM LOCATIONS SHALL BE INSPECTED. LOCATIONS WHERE VEHICLES ENTER AND EXIT THE SITE SHALL BE INSPECTED FOR EVIDENCE OF OFF-SITE ROADWAY SEDIMENT TRACKING.

(30) UPON CONCLUSION OF THE INSPECTIONS, EPSC MEASURES FOUND TO BE INEFFECTIVE SHALL BE REPAIRED, REPLACED, OR MODIFIED BEFORE THE NEXT RAIN EVENT, IF POSSIBLE, BUT IN NO CASE MORE THAN 24 HOURS AFTER THE INSPECTION OR WHEN THE CONDITION IS IDENTIFIED. IF THE REPAIR, REPLACEMENT OR MODIFICATION IS NOT PRACTICAL WITHIN THE TIMEFRAME, WRITTEN DOCUMENTATION MUST BE PROVIDED IN THE FIELD BOOK AND AN ESTIMATED REPAIR, REPLACEMENT OR MODIFICATION SCHEDULE SHALL BE DOCUMENTED WITHIN 24 HOURS AFTER IDENTIFICATION.

(31) THE TDOT PROJECT SUPERVISOR (OR THEIR DESIGNEE) AND THE CONTRACTOR'S SITE SUPERINTENDENT ARE RESPONSIBLE FOR INSPECTIONS. MAINTENANCE AND REPAIR ACTIVITIES ARE THE RESPONSIBILITY OF THE CONTRACTOR. THE TDOT PROJECT SUPERVISOR OR THEIR DESIGNEE WILL COMPLETE THE INSPECTION REPORTS AND DISTRIBUTE COPIES PER THE CONTRACT.

### MATERIALS

(32) WASTE AND BORROW AREAS SHALL BE LOCATED IN NON-WETLAND AREAS AND ABOVE THE 100-YEAR, FEDERAL EMERGENCY MANAGEMENT AGENCY FLOODPLAIN. BORROW AND WASTE DISPOSAL AREAS SHALL NOT AFFECT ANY WATERS OF THE STATE/U.S. UNLESS THESE AREAS ARE SPECIFICALLY COVERED BY AN ARAP, 404, OR NPDES PERMIT, OBTAINED SOLELY BY THE CONTRACTOR.

### SWPPP, PERMITS, PLANS, RECORDS

(33) THE CONTRACTOR SHALL BE SOLELY RESPONSIBLE FOR AND OBTAIN ANY NECESSARY ENVIRONMENTAL PERMITS OR APPROVALS, INCLUDING BUT NOT LIMITED TO TDEC ARAP/401, USACE SECTION 404, TVA SECTION 26A, AND TDEC NPDES PERMITS, FROM FEDERAL, STATE AND/OR LOCAL AGENCIES REGARDING THE OPERATION OF ANY PROJECT-DEDICATED ASPHALT AND/OR CONCRETE PLANTS.

(34) ANY DISAGREEMENT BETWEEN THE PROJECT PLANS, THE PROJECT AS CONSTRUCTED, AND THE PERMIT(S) ISSUED FOR THE PROJECT, SHALL BE BROUGHT TO THE ATTENTION OF THE TDOT PROJECT ENGINEER. THE ENVIRONMENTAL DIVISION, ROADWAY DESIGN DIVISION, AND HEADQUARTERS CONSTRUCTION OFFICE SHALL BE CONTACTED IN THESE INSTANCES AND DECIDE WHICH HAS PRECEDENCE AND WHETHER PERMIT OR PLANS REVISIONS ARE NEEDED. IN GENERAL, PERMIT CONDITIONS WILL PREVAIL.

(35) THE FOLLOWING INFORMATION SHALL BE MAINTAINED ON OR NEAR THE SITE: DATES THAT MAJOR GRADING ACTIVITIES OCCUR, DATES WHERE CONSTRUCTION ACTIVITIES TEMPORARILY OR PERMANENTLY CEASE ON A PORTION OF THE SITE, DATES WHEN STABILIZATION MEASURES ARE INITIATED, EPSC INSPECTION RECORDS, QUALITY ASSURANCE SITE ASSESSMENT RECORDS, PRECIPITATION RECORDS, SWPPP, PROJECT ENVIRONMENTAL PERMITS, AND A COPY OF THE PROJECT EPSC INSPECTOR'S TDEC LEVEL 1 CERTIFICATION.

(36) ALL WATER QUALITY AND STORM WATER PERMITS, INCLUDING A COPY OF THE NOC WITH NPDES PERMIT TRACKING NUMBER AND THE LOCATION OF THE SWPPP, SHALL BE POSTED NEAR THE MAIN ENTRANCE OF THE CONSTRUCTION SITE ACCESSIBLE TO THE PUBLIC. THE NAME, COMPANY NAME, EMAIL ADDRESS, TELEPHONE NUMBER AND ADDRESS OF THE PROJECT SITE OWNER, OPERATOR, OR A LOCAL CONTACT PERSON WITH A BREIF DESCRIPTION OF THE PROJECT SHALL ALSO BE POSTED. IF POSTING THIS INFORMATION NEAR A MAIN ENTRANCE IS INFEASIBLE, THE INFORMATION SHALL BE PLACED IN A PUBLICLY ACCESSIBLE LOCATION NEAR WHERE THE CONSTRUCTION IS ACTIVELY UNDERWAY AND MOVED AS NECESSARY. THIS LOCATION SHALL BE POSTED AT THE CONSTRUCTION SITE. ALL POSTINGS SHALL BE MAINTAINED IN LEGIBLE CONDITION.

(37) IF A CHANGE IN PROJECT SCOPE OCCURS DURING CONSTRUCTION, INCLUDING VALUE ENGINEERING, THE ENVIRONMENTAL DIVISION SHALL BE CONTACTED TO DETERMINE WHETHER PERMIT REVISIONS OR MODIFICATIONS OF THE SWPPP ARE NEEDED. THE ROADWAY DESIGN DIVISION SHALL BE CONTACTED TO DETERMINE IF ANY PLAN REVISIONS ARE NEEDED.

(38) THE SWPPP SHALL BE UPDATED BY CONSTRUCTION WHENEVER EPSC INSPECTIONS INDICATE, OR WHERE STATE OR FEDERAL OFFICIALS DETERMINE EPSC MEASURES ARE PROVING INEFFECTIVE IN ELIMINATING OR SIGNIFICANTLY MINIMIZING POLLUTANT SOURCES OR ARE OTHERWISE NOT ACHIEVING THE GENERAL OBJECTIVES OF CONTROLLING POLLUTANTS IN STORM WATER DISCHARGES ASSOCIATED WITH THE CONSTRUCTION ACTIVITY. THE ENVIRONMENTAL DIVISION SHALL BE CONTACTED WHEN MAJOR DESIGN REVISIONS ARE REQUESTED BY CONSTRUCTION. THE ENVIRONMENTAL DIVISION MAY BE CONTACTED FOR GUIDANCE ON SPECIFIC SWPPP NEEDS. A COPY OF ANY CORRESPONDENCE REGARDING THE EFFECTIVENESS OF THE SWPPP OR EPSC CONTROLS SHALL BE RETAINED IN THE SWPPP.

(39) THE SWPPP SHALL BE UPDATED BY CONSTRUCTION WHENEVER A CHANGE IN CHEMICAL TREATMENT METHODS IS MADE INCLUDING USE OF A DIFFERENT CHEMICAL, DIFFERENT DOSAGE OR APPLICATION RATE, OR A DIFFERENT AREA OF APPLICATION.

(40) IF A TMDL IS DEVELOPED FOR THE RECEIVING WATERS FOR A POLLUTANT OF CONCERN (SILTATION AND/OR HABITAT ALTERATION) THE SWPPP SHALL BE MODIFIED OR UPDATED.

(41) PROJECT INSPECTORS AND SUPERVISORS (INCLUDING TDOT STAFF, CONSULTANTS AND CONTRACTOR STAFF) RESPONSIBLE FOR THE IMPLEMENTATION AND MAINTENANCE OF EPSC PLANS SHALL SUCCESSFULLY COMPLETE THE TDEC "LEVEL 1 - FUNDAMENTALS OF EROSION PREVENTION AND SEDIMENT CONTROL FOR CONSTRUCTION SITES" COURSE AND ANY REFRESHER COURSES AS REQUIRED TO MAINTAIN CERTIFICATION. A COPY OF CERTIFICATION RECORDS FOR THE COURSES SHALL BE KEPT ON SITE AND AVAILABLE UPON REQUEST.

### LITTER, DEBRIS, WASTE, PETROLEUM

(42) THE CONTRACTOR SHALL ESTABLISH AND MAINTAIN A PROACTIVE METHOD TO PREVENT LITTER, CONSTRUCTION DEBRIS, AND CONSTRUCTION WASTES FROM ENTERING WATERS OF THE STATE/U.S. THESE MATERIALS WILL BE PICKED UP AND REMOVED FROM STORMWATER EXPOSURE PRIOR TO ANTICIPATED STORM EVENTS. AFTER USE, MATERIALS USED FOR EPSC WILL BE REMOVED FROM THE SITE.

(43) THE CONTRACTOR SHALL TAKE APPROPRIATE STEPS TO ENSURE THAT PETROLEUM PRODUCTS OR OTHER CHEMICAL POLLUTANTS ARE PREVENTED FROM ENTERING WATERS OF THE STATE/U.S. ALL EQUIPMENT REFUELING, SERVICING, AND STAGING AREAS SHALL COMPLY WITH ALL LOCAL, STATE, AND FEDERAL LAWS, RULES, REGULATIONS, AND ORDINANCES, INCLUDING THOSE OF THE NATIONAL FIRE PROTECTION ASSOCIATION (NFPA). APPROPRIATE CONTAINMENT MEASURES FOR THESE AREAS SHALL BE USED. ALL SPILLS MUST BE REPORTED TO THE APPROPRIATE AGENCY, AND MEASURES SHALL BE TAKEN IMMEDIATELY TO PREVENT THE POLLUTION OF WATERS OF THE STATE/U.S., INCLUDING GROUNDWATER, SHOULD A SPILL OCCUR.

**UNOFFICIAL SET**

**NOT FOR BIDDING**

SEALED BY

STATE OF TENNESSEE
DEPARTMENT OF TRANSPORTATION

GENERAL NOTES

2/9/2015 1:02:45 PM
H:\116003\Dgn\002f.sht

| TYPE | YEAR | PROJECT NO. | SHEET NO. |
|---|---|---|---|
| CONST. | 2015 | 25945-3477-04 | 2G |
| | | | |
| | | | |
| | | | |

# SPECIAL NOTES

## GRADING

(1) THE GRADING TABULATIONS AND RESULTING EARTHWORK ASSOCIATED BID QUANTITIES WERE PREPARED UTILIZING AVAILABLE GEOTECHNICAL INFORMATION AND/OR REPORTS PREPARED FOR THIS PROJECT. THIS INFORMATION IS PROVIDED FOR GENERAL INFORMATION AND ESTIMATION GUIDANCE ONLY.

(2) BORING DEPICTIONS SHOWN ON THE FOUNDATION DATA SHEETS, SOILS SHEETS, PLANS, AND CROSS-SECTIONS INDICATE SOIL AND ROCK CONDITIONS AT THE SPECIFIC BORING LOCATIONS. ANY SOIL PROFILE AND/OR ROCK LINE IS INTERPRETIVE BASED ON THE JUDGMENT OF THE GEOTECHNICAL ENGINEER/GEOLOGIST. THE TRANSITION BETWEEN BORINGS AND LAYERS MAY VARY SIGNIFICANTLY DEPENDING ON THE GEOLOGIC FORMATIONS ENCOUNTERED.

(3) TO ASSIST IN BID PREPARATION FOR EARTHWORK AND FOUNDATION CONSTRUCTION, DETAIL ROCK AND SOIL DESCRIPTION AND ON SOME PROJECTS, ROCK CORE SAMPLES ARE AVAILABLE FOR INSPECTION AT THE MATERIALS AND TESTS HEADQUARTERS AT 6601 CENTENNIAL BOULEVARD, NASHVILLE, TN OR AT THE TDOT REGION 1 BUILDING IN KNOXVILLE, TN.

(4) THE CONTRACTOR SHALL UTILIZE ALL INFORMATION PROVIDED IN THE PLANS, CROSS-SECTIONS AND CONTRACT DOCUMENTS INCLUDING ANY SPECIAL PROVISIONS AS WELL AS UTILIZING HIS PAST EXPERIENCE WITH PROJECTS OF SIMILAR NATURE, SCOPE AND LOCATION IN PREPARATION OF HIS BID FOR EARTHWORK ITEMS. IT IS THE CONTRACTOR'S RESPONSIBILITY TO DETERMINE AND PROVIDE EQUIPMENT AND MEANS NECESSARY TO CONDUCT THE EXCAVATION ACTIVITIES IN ACCORDANCE WITH PLANS AND SPECIFICATIONS.

(5) EARTHWORK IS PAID FOR UNDER ITEM 203-01, ROAD AND DRAINAGE EXCAVATION (UNCLASSIFIED). NO ADDITIONAL PAYMENT WILL BE MADE FOR EARTHWORK QUANTITIES BASED SOLELY ON A CLAIM THAT THE QUANTITIES SHOWN IN THE GRADING TABULATION OR ELSEWHERE IN THE PLANS ARE INACCURATE WITH RESPECT TO THE TYPE OF MATERIALS ENCOUNTERED DURING CONSTRUCTION EXCEPT AS PROVIDED FOR BY SECTION 104.02 IN THE CURRENT EDITION OF THE STANDARD SPECIFICATIONS FOR ROAD AND BRIDGE CONSTRUCTION OR AS AMENDED IN SUPPLEMENTAL SPECIFICATIONS.

## EROSION PREVENTION AND SEDIMENT CONTROL

### NPDES

(1) REFER TO THE EROSION PREVENTION AND SEDIMENT CONTROL PLAN, SHEET 12, FOR NOTES REGARDING SEASONAL WORK LIMITATION OR LIMITATION ON THE TOTAL AREA OF EXPOSED SOIL.

**UNOFFICIAL SET**

**NOT FOR BIDDING**

SEALED BY

STATE OF TENNESSEE
DEPARTMENT OF TRANSPORTATION

SPECIAL NOTES

2/9/2015 1:04:26 PM
H:\11l6003\Dgn\002g.sht

| TYPE | YEAR | PROJECT NO. | SHEET NO. |
|---|---|---|---|
| CONST. | 2015 | 25945-3477-04 | 2H |

## ESTIMATED GRADING QUANTITIES

| LOCATION | ROAD & DRAINAGE EXC. (UNCL.) | | | BORROW EXC. | EXCESS EXCAVATION WASTE | EMBANKMENT |
|---|---|---|---|---|---|---|
| | COMMON | ROCK | TOPSOIL | GRADED SOLID ROCK (1) | | |
| | (C.Y.) | | | | | |
| | | | | | | |
| INTERNATIONAL BLVD. | 25098 | 4349 | 5399 | | 21175 | 6618 |
| UNDERCUT IN WETLAND AREAS | 1106 | | | 1106 | | |
| DRIVEWAYS | 59 | | | | -19 | 62 |
| EPSC MEASURES | 28 | | | | | |
| CULVERT EXCAVATION | 80 | | | | | |
| | | | | | | |
| **TOTALS** | **26371** | **4349** | **5399** | **1106** | **21156** | **6680** |

(1) GRADED SOLID ROCK (ITEM 203-02.01) IS MEASURED AND PAID FOR PER TON. CY VOLUME SHOWN FOR GRADING PUROPOSES ONLY.
SHR. 25%

## PAVEMENT QUANTITIES

| LOCATION | PAY ITEMS | | | | | | | | |
|---|---|---|---|---|---|---|---|---|---|
| | 303-01 | 307-01.01 | 307-01.08 | 411-01.10 | 404-01.01 | 404-01.02 | 402-01 | 402-02 | 403-01 |
| | (TON) | | | | | | | | |
| INTERNATIONAL BLVD. | 14255.77 | 2521.43 | 1651.72 | 968.38 | 16.36 | 130.49 | 22.14 | 80.70 | 8.86 |
| DRIVEWAYS | 85.02 | | 37.27 | 24.97 | | | | | |
| | | | | | | | | | |
| | | | | | | | | | |
| | | | | | | | | | |
| **TOTALS** | **14340.79** | **2521.43** | **1688.99** | **993.35** | **16.36** | **130.49** | **22.14** | **80.70** | **8.86** |

## REMOVAL OF STRUCTURES & OBSTRUCTIONS

| SHEET NO. | LOCATION | STATION | STATION | OFFSET | DESCRIPTION | REMARKS |
|---|---|---|---|---|---|---|
| 4 | INTERNATIONAL BLVD | 10+17.22 | | 0 | 99.08 L.F. - 12" CMP CROSS DRAIN | |
| 5 | INTERNATIONAL BLVD | 18+48.16 | | 0 | 59.95 L.F. - 18" CMP CROSS DRAIN | |
| 6 | INTERNATIONAL BLVD | 34+71.14 | | 0 | 40.11 L.F. - 15" CMP CROSS DRAIN | |
| 6 | INTERNATIONAL BLVD | 35+39.57 | | 0 | 40.21 L.F. - 12" CMP CROSS DRAIN | |
| | | | | | | |

## PROPOSED GUARDRAIL

| SHEET NO. | LOCATION | SIDE | | STATION | | SINGLE GUARDRAIL TYPE 2 705-02.02 (L.F.) | TYPE 21 TERMINAL 705-04.04 (EACH) | REMARKS |
|---|---|---|---|---|---|---|---|---|
| | | LT | RT | FROM | TO | | | |
| | | | | | | | | |
| 5A | INTERNATIONAL BLVD. | | X | 17+67.00 | 18+66.00 | 67.50 | 2 | |
| 5A | INTERNATIONAL BLVD. | X | | 18+40.00 | 19+49.00 | 77.00 | 2 | |
| 8A | INTERNATIONAL BLVD. | X | | 46+60.00 | 50+50.00 | 330.00 | 2 | |
| 8A | INTERNATIONAL BLVD. | | X | 46+80.00 | 48+60.00 | 120.00 | 2 | |
| | | | | | | | | |
| | | | | | | | | |
| **TOTALS** | | | | | | **594.5** | **8** | |

**UNOFFICIAL SET**

**NOT FOR BIDDING**

SEALED BY

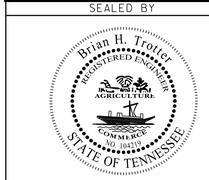


STATE OF TENNESSEE
DEPARTMENT OF TRANSPORTATION

# TABULATED QUANTITIES

SHEET 1 OF 2

2/9/2015 4:05:23 PM
H:\Ill6003\Dgn\002h.sht

| TYPE | YEAR | PROJECT NO. | SHEET NO. |
|---|---|---|---|
| CONST. | 2015 | 25945-3477-04 | 2I |
| | | | |
| | | | |
| | | | |

## SIDE DRAIN TABULATION

| STATION | LOCATION | | | DESCRIPTION | SURFACE WIDTH | RCP CLASS III OR CMP 16 GA. OR HDPE (L.F.) | REMARKS |
|---|---|---|---|---|---|---|---|
| | | LT | RT | | (FT.) | 15" | |
| 12+20.98 | INTERNATIONAL BLVD. | | X | FIELD | 12 | 16.7 | |
| 21+14.29 | INTERNATIONAL BLVD. | X | | FIELD | 12 | | NO S.D. REQ'D. |
| 32+40.80 | INTERNATIONAL BLVD. | | X | FIELD | 12 | 23.0 | |
| 36+03.88 | INTERNATIONAL BLVD. | | X | FIELD | 12 | | NO S.D. REQ'D. |
| 43+75.85 | INTERNATIONAL BLVD. | | X | FIELD | 12 | 17.8 | |
| | | | | | | | |
| | | | | | | | |
| **TOTALS** | | | | | | **57.5** | |

## BOX CULVERT TABULATION

| STATION | LOCATION | SPAN | HEIGHT | LENGTH | SKEW | DRAINAGE AREA | BOX CULVERT BOX CLASS "A" CONC. | BOX CULVERT BOX REINF. STEEL | DRAWING NO. | BACKFILLING ITEM 303-01.01 DWG. STD-10-1 | FOUNDATION FILL MATERIAL |
|---|---|---|---|---|---|---|---|---|---|---|---|
| | | (FT) | | | | ACRES | CU. YD. | LBS. | | TONS | CU. YD. |
| | | | | | | | | | | | |
| 48+28.93 | INTERNATIONAL BLVD. | 8 | 5 | 84 | 43°51'03" | 189.9 | 79.47 | 15636.68 | | 247.1 | 20.69 |
| | | | | | | | | | | | |
| | | | | | | | | | | | |
| | | | | | | | | | | | |
| **TOTALS** | | | | | | | **79.47** | **15636.68** | | **247.1** | **20.69** |

## CROSS DRAIN TABULATION

| STATION | CONCRETE PIPE CULVERT (CLASS III) FILL HEIGHT < OR = 16 FT. L.F. | | SKEW | ENDWALL (CROSS DRAIN) 24IN 3:1 611-07.57 | 30IN 3:1 611-07.60 | CLASS "A" CONC. 611-07.01 | REINFORCING STEEL 611-07.02 | STANDARD DRAWINGS | REMARKS |
|---|---|---|---|---|---|---|---|---|---|
| | 24" | 30" | | EACH | | C.Y. | LB. | | |
| 18+51.16 | | 59.9 | 54°23'57" LT | | | 7.35 | 221.83 | D-PE-4 | |
| 35+39.57 | 40.7 | | 90°00'00" | 2 | | | | D-PE-24A, D-PE-24B | |
| 54+76.12 | 48.5 | | 78°31'56" LT | | 2 | | | D-PE-30A, D-PE-30B | |
| 59+88.23 | 69.5 | | 90°00'00" | 2 | | | | D-PE-24A, D-PE-24B | |
| | | | | | | | | | |
| | | | | | | | | | |
| **TOTALS** | **158.7** | **59.9** | | **4** | **2** | **7.35** | **221.83** | | |

**UNOFFICIAL SET**

**NOT FOR BIDDING**

SEALED BY

STATE OF TENNESSEE
DEPARTMENT OF TRANSPORTATION

TABULATED QUANTITIES

SHEET 2 OF 2

2/9/2015 1:06:15 PM
H:\Ill6003\Dgn\002I.sht

| TYPE | YEAR | PROJECT NO. | SHEET NO. |
|---|---|---|---|
| R.O.W. | 2014 | 25945-2477-04 | 3 |
| CONST. | 2015 | 25945-3477-04 | 3 |
| | | | |
| | | | |

REV 01-15-15: REVISED SLOPE & CONST. ESMT. AREAS TRACT 8

## RIGHT - OF - WAY NOTES

(1) IT IS INTENDED THAT ALL BUILDINGS AND/OR PORTIONS OF BUILDINGS THAT ARE WITHIN THE PROPOSED RIGHT-OF-WAY AND/OR EASEMENT LINES FOR THE PROJECT BE REMOVED THERE FROM IN THE PROCESS OF RIGHT-OF-WAY ACQUISITION. IF ANY SUCH BUILDINGS OR IMPROVEMENTS ARE NOT REMOVED IN THE COURSE OF RIGHT-OF-WAY ACQUISITION, THE CIVIL ENGINEERING MANAGER 2, DESIGN DIVISION AND THE CIVIL ENGINEERING MANAGER 1, REGIONAL DESIGN OFFICE, ARE TO BE NOTIFIED IN SUFFICIENT TIME TO PERMIT HAVING SUCH REMOVALS DESIGNATED AS A PART OF THE CONSTRUCTION CONTRACT.

(2) ALL RAMPS MUST CONFORM TO THE DEPARTMENT'S "POLICY ON FINANCING CONSTRUCTION OF PUBLIC ROAD INTERSECTIONS AND DRIVEWAYS ON HIGHWAY RESURFACING, RECONSTRUCTION AND CONSTRUCTION PROJECTS ON NEW LOCATIONS", THE MANUAL ON RULES AND REGULATIONS FOR CONSTRUCTING DRIVEWAYS ON STATE HIGHWAY RIGHT-OF-WAY, STANDARD DRAWING RP-R-1, AND OTHER ACCEPTED DESIGN AND SAFETY STANDARDS.

(3) EXISTING PAVED DRIVEWAY PER TRACT REMAINDER WILL BE REPLACED IN KIND TO A TOUCHDOWN POINT.

(4) WHERE THE EXISTING DRIVEWAY IS UNPAVED AND THE PROPOSED DRIVEWAY EXCEEDS 7 PERCENT IN GRADE, EACH DRIVEWAY WILL BE PAVED TO A TOUCHDOWN POINT OR UNTIL THE GRADE IS LESS THAN 7 PERCENT.

(5) WHERE THE EXISTING DRIVEWAY IS UNPAVED AND THE PROPOSED DRIVEWAY IS LESS THAN 7 PERCENT IN GRADE, EACH DRIVEWAY WILL BE PAVED A SHOULDER WIDTH FROM THE EDGE OF PAVEMENT AND THE REMAINDER OF THAT DRIVEWAY REPLACED IN KIND TO A TOUCHDOWN POINT.

(6) ANY NECESSARY PAVING OF DRIVEWAYS WILL BE DONE DURING PAVING OPERATIONS ON THE MAIN ROADWAY.

(7) NEW DRIVEWAYS PROVIDED IN THE PLANS WILL BE PAVED BASED ON THE 7 PERCENT CRITERIA. THOSE 7 PERCENT OR STEEPER IN GRADE WILL BE PAVED AND THOSE FLATTER THAN 7 PERCENT WILL BE COVERED WITH BASE STONE.

(8) ON NON-STATE ROUTES, ADDITIONAL DRIVEWAYS AND FIELD ENTRANCES OTHER THAN THOSE PROVIDED IN THE PLANS SHALL REQUIRE A PERMIT ONLY IF THE LOCAL AGENCY SPECIFIES THE NEED FOR THAT PERMIT.

## UTILITIES

(1) THE LOCATIONS OF UTILITIES SHOWN WITHIN THESE PLANS ARE APPROXIMATE ONLY. EXACT LOCATIONS SHALL BE DETERMINED IN THE FIELD BY CONTACTING THE UTILITY COMPANIES INVOLVED. NOTIFICATION BY CALLING THE TENNESSEE ONE CALL SYSTEM, INC., AT 1-800-351-1111 AS REQUIRED BY TCA 65-31-106 WILL BE REQUIRED.

(2) UNLESS OTHERWISE NOTED, ALL UTILITY ADJUSTMENTS WILL BE PERFORMED BY THE UTILITY OR IT'S REPRESENTATIVE. THE CONTRACTOR AND UTILITY OWNERS WILL BE REQUIRED TO COOPERATE WITH EACH OTHER IN ORDER TO EXPEDITE THE WORK REQUIRED BY THIS CONTRACT. ON CONTRACTS WHERE CONSTRUCTION STAKES, LINES, AND GRADES ARE CONTRACT ITEMS, THE CONTRACTOR WILL BE REQUIRED TO PROVIDE RIGHT-OF-WAY OR SLOPE STAKES, DITCH OR STREAM BED GRADES, OR OTHER ESSENTIAL SURVEY STAKING TO PREVENT CONFLICTS WITH THE HIGHWAY CONSTRUCTION. FREQUENTLY, THIS WILL BE REQUIRED AS THE FIRST ITEM OF WORK AND AT ANY LOCATION ON THE PROJECT DIRECTED BY THE ENGINEER.

(3) THE CONTRACTOR WILL PROVIDE ALL NECESSARY PROTECTIVE MEASURES TO SAFEGUARD EXISTING UTILITIES FROM DAMAGE DURING CONSTRUCTION OF THIS PROJECT. IN THE EVENT THAT SPECIAL EQUIPMENT IS REQUIRED TO WORK OVER AND AROUND THE UTILITIES, THE CONTRACTOR WILL BE REQUIRED TO FURNISH SUCH EQUIPMENT. THE COST OF PROTECTING UTILITIES FROM DAMAGE AND FURNISHING SPECIAL EQUIPMENT WILL BE INCLUDED IN THE PRICE BID FOR OTHER ITEMS OF CONSTRUCTION.

(4) PRIOR TO SUBMITTING HIS BID, THE CONTRACTOR WILL BE SOLELY RESPONSIBLE FOR CONTACTING OWNERS OF ALL AFFECTED UTILITIES IN ORDER TO DETERMINE THE EXTENT TO WHICH UTILITY RELOCATIONS AND/OR ADJUSTMENTS WILL HAVE UPON THE SCHEDULE OF WORK FOR THE PROJECT. WHILE SOME WORK MAY BE REQUIRED 'AROUND' UTILITY FACILITIES THAT WILL REMAIN IN PLACE, OTHER UTILITY FACILITIES MAY NEED TO BE ADJUSTED CONCURRENTLY WITH THE CONTRACTOR'S OPERATIONS. ADVANCE CLEAR CUTTING MAY BE REQUIRED BY THE ENGINEER AT ANY LOCATION WHERE CLEARING IS CALLED FOR IN THE SPECIFICATIONS AND CLEAR CUTTING IS NECESSARY FOR A UTILITY RELOCATION. ANY ADDITIONAL COST WILL BE INCLUDED IN THE UNIT PRICE BID FOR THE CLEARING ITEM SPECIFIED IN THE PLANS.

(5) THE CONTRACTOR SHALL NOTIFY EACH INDIVIDUAL UTILITY OWNER OF HIS PLAN OF OPERATION IN THE AREA OF THE UTILITIES. PRIOR TO COMMENCING WORK, THE CONTRACTOR SHALL CONTACT THE UTILITY OWNERS AND REQUEST THEM TO PROPERLY LOCATE THEIR RESPECTIVE UTILITY ON THE GROUND. THIS NOTIFICATION SHALL BE GIVEN AT LEAST THREE (3) BUSINESS DAYS PRIOR TO COMMENCEMENT OF OPERATIONS AROUND THE UTILITY IN ACCORDANCE WITH TCA 65-31-106.

## UTILITY OWNERS

**TELEPHONE**

TWIN LAKES TELEPHONE COOPERATIVE
P.O. BXO 67
GAINESBORO, TN 38562
JAMES DOBBS
(931) 268-2151
JDOBBS@TWLAKES.COOP

**ELECTRIC**

VOLUNTEER ELECTRIC COOPERATIVE
P.O. BOX 277
DECATUR, TN 37322
RODY BLEVINS
(423) 334-7001
RBLEVINS@VEC. ORG

**WASTE WATER**

ADENUS, LLC
851 AVIATION PARKWAY
SMYRNA, TN 37167
CHARLES PICKNEY
(615) 220-7171
CHARLES.PICKNEY@ADENUS. COM

**WATER**

FENTRESS COUNTY UTILITY DISTRICT
1026 TAYLOR PLACE ROAD
JAMESTOWN, TN 38556
TOMMY DUNCAN
(931) 879-7639
FCUTILITY@TWLAKES.NET

## R.O.W. ACQUISITION TABLE

| TRACT NO. | PROPERTY OWNERS | COUNTY RECORDS | | | | TOTAL AREA ACRES | | | AREA TO BE ACQUIRED ACRES | | | AREA REMAINING ACRES | | EASEMENT (SQUARE FEET) | | |
|---|---|---|---|---|---|---|---|---|---|---|---|---|---|---|---|---|
| | | TAX MAP NO. | PARCEL NO. | DEED DOCUMENT REFERENCE BK. | DEED DOCUMENT REFERENCE PAGE | LEFT | RIGHT | TOTAL | LEFT | RIGHT | TOTAL | LEFT | RIGHT | PERM. DRAINAGE | SLOPE | CONST. |
| ~~1~~ | ~~LEO SMITH AND WIFE EMOGENE~~ | ~~149~~ | ~~13~~ | ~~M6~~ | ~~16~~ | | ~~38.000~~ | ~~38.000~~ | | | | | ~~38.000~~ | | | |
| ~~2~~ | ~~BRENDA FARR COPELAND~~ | ~~150~~ | ~~21.02~~ | ~~M-6~~ | ~~666~~ | | ~~1.500~~ | ~~1.500~~ | | | | | ~~1.500~~ | | | |
| ~~3~~ | ~~LAWRENCE E. MURDOCK AND WIFE ALISON R. / BRENDA FARR-COPELAND LIFE ESTATE~~ | ~~150~~ | ~~21.05~~ | ~~185~~ | ~~327~~ | | ~~1.490~~ | ~~1.490~~ | | | | | ~~1.490~~ | | | |
| ~~4~~ | ~~CRISTALYN M. WALKER / DONNIE HALL LIFE ESTATE~~ | ~~150~~ | ~~21.03 / 21.06~~ | ~~208~~ | ~~133~~ | | ~~3.000~~ | ~~3.000~~ | | | | | ~~3.000~~ | | | |
| ~~5~~ | ~~DANIEL L. HALL AND OTHERS~~ | ~~150~~ | ~~21.04~~ | ~~A8~~ | ~~49~~ | | ~~19.300~~ | ~~19.300~~ | | | | | ~~19.300~~ | | | |
| ~~6~~ | ~~ESCOL NORMAN AND WIFE MAXINE~~ | ~~149~~ | ~~12~~ | ~~U5~~ | ~~261~~ | ~~69.000~~ | | ~~69.000~~ | | | | ~~69.000~~ | | | | |
| 7 | DANNY HALL AND KENT HALL | 150 | 1.01 | 64 | 16 | 0.388 | 55.812 | 56.200 | | | | 0.388 | 55.812 | 0.162 AC | 0.248 AC | 0.541 AC |
| 8 | INDUSTRIAL DEVELOPMENT BOARD OF FENTRESS CO. INC. | 144 | 3.03 | 116 | 578 | 245.319 | | 245.319 | 4.569 | | 4.569 | 240.750 | | 588 | 0.265 AC | 0.456 AC |
| ~~9~~ | ~~DANNY HALL AND KENT HALL~~ | ~~150~~ | ~~1.01~~ | ~~64~~ | ~~16~~ | | | | | | | | | | | |
| ~~10~~ | ~~ESCOL NORMAN AND WIFE MAXINE~~ | ~~149~~ | ~~11~~ | ~~B5~~ | ~~8~~ | ~~150.294~~ | | ~~150.294~~ | | | | ~~150.294~~ | | | | |
| ~~11~~ | ~~INEZ V. SMITH~~ | ~~144~~ | ~~4~~ | ~~M6~~ | ~~16~~ | ~~79.235~~ | | ~~79.235~~ | | | | ~~79.235~~ | | | | |
| | | | | | | | | | | | | | | | | |
| | | | | | | | | | | | | | | | | |
| | | | | | | | | | | | | | | | | |

**UNOFFICIAL SET**

**NOT FOR BIDDING**

SEALED BY

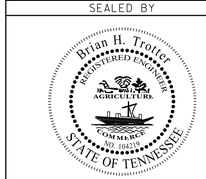


STATE OF TENNESSEE
DEPARTMENT OF TRANSPORTATION

R.O.W. NOTES, UTILITY OWNERS, ACQUISITION TABLE

2/9/2015 1:06:57 PM
H:\11603\Dgn\003.sht

| TYPE | YEAR | PROJECT NO. | SHEET NO. |
|---|---|---|---|
| R.O.W. | 2014 | 25945-2477-04 | 3A |
| CONST. | 2015 | 25945-3477-04 | 3A |
| | | | |
| | | | |

REV 12-05-14: REVISED AREA OF WTL-4

REV 01-15-15: REVISED SLOPE & CONST. ESMT. TRACT 8

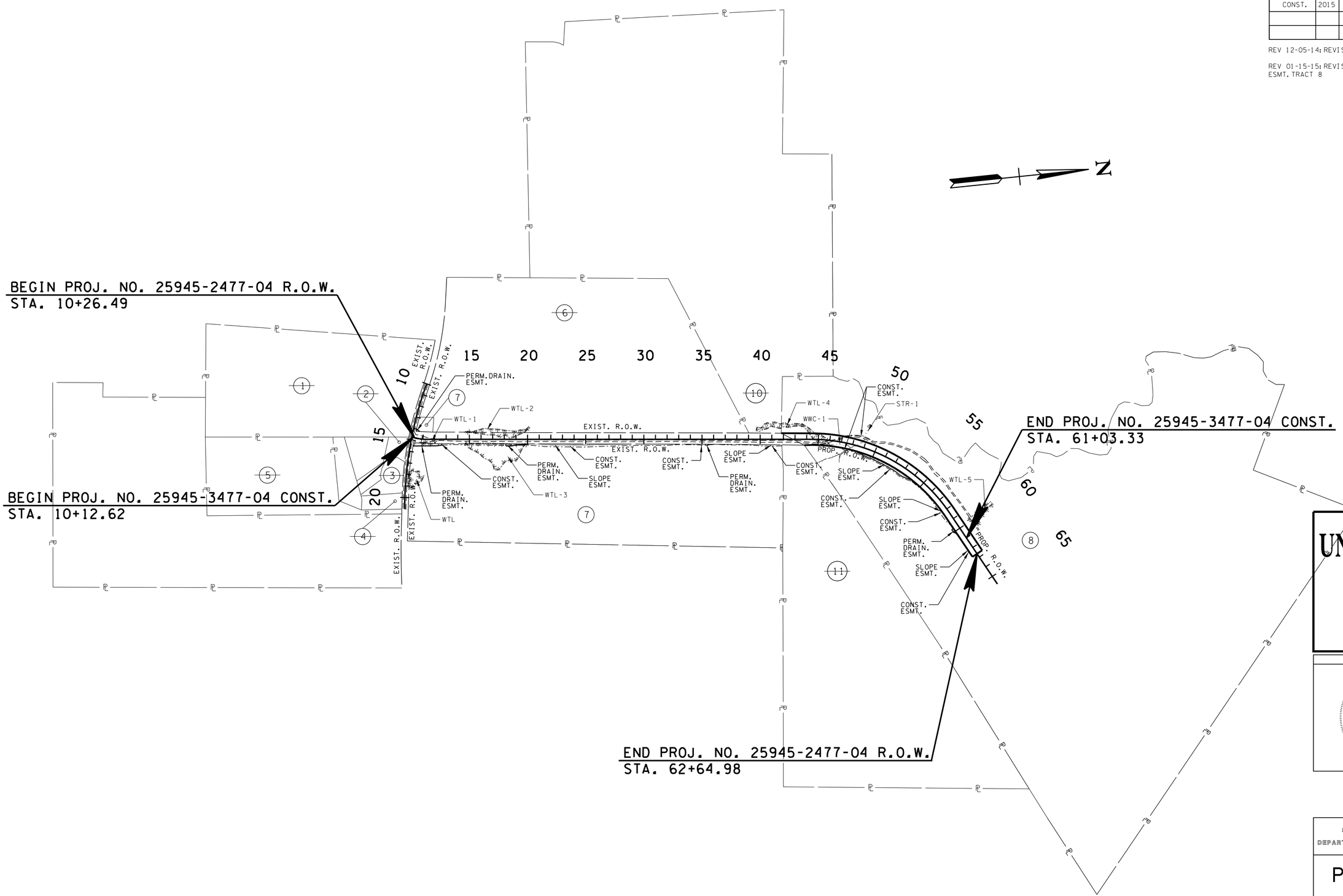


UNOFFICIAL SET

NOT FOR BIDDING

SEALED BY

Brian H. Trotter
REGISTERED ENGINEER
AGRICULTURE
COMMERCE
NO. 108029
STATE OF TENNESSEE

STATE OF TENNESSEE
DEPARTMENT OF TRANSPORTATION

# PROPERTY MAP

SCALE: 1"=400'

2/9/2015 1:08:11 PM
H:\II6003\Dgn\003a.sht

| TYPE | YEAR | PROJECT NO. | SHEET NO. |
|---|---|---|---|
| R.O.W. | 2014 | 25945-2477-04 | 4 |
| CONST. | 2015 | 25945-3477-04 | 4 |
| | | | |
| | | | |

REV 09-19-14: REVISED WETLAND IMPACT PATTERN WTL-3. REVISED WETLAND IMPACT AREAS WTL-2 & WTL-3

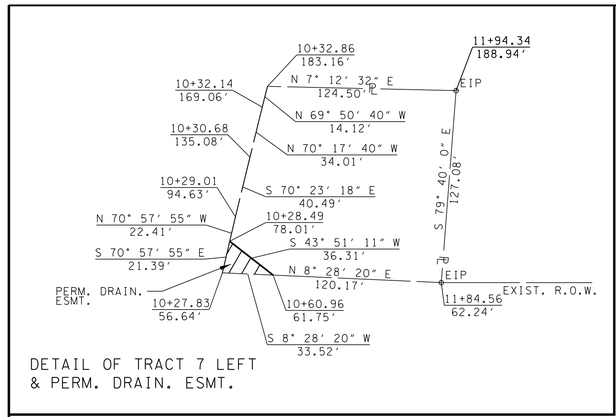


DETAIL OF TRACT 7 LEFT & PERM. DRAIN. ESMT.

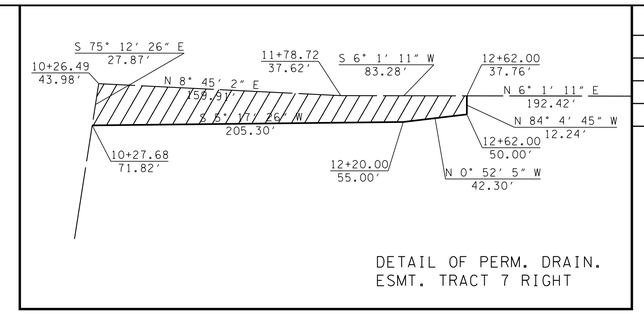


DETAIL OF PERM. DRAIN. ESMT. TRACT 7 RIGHT

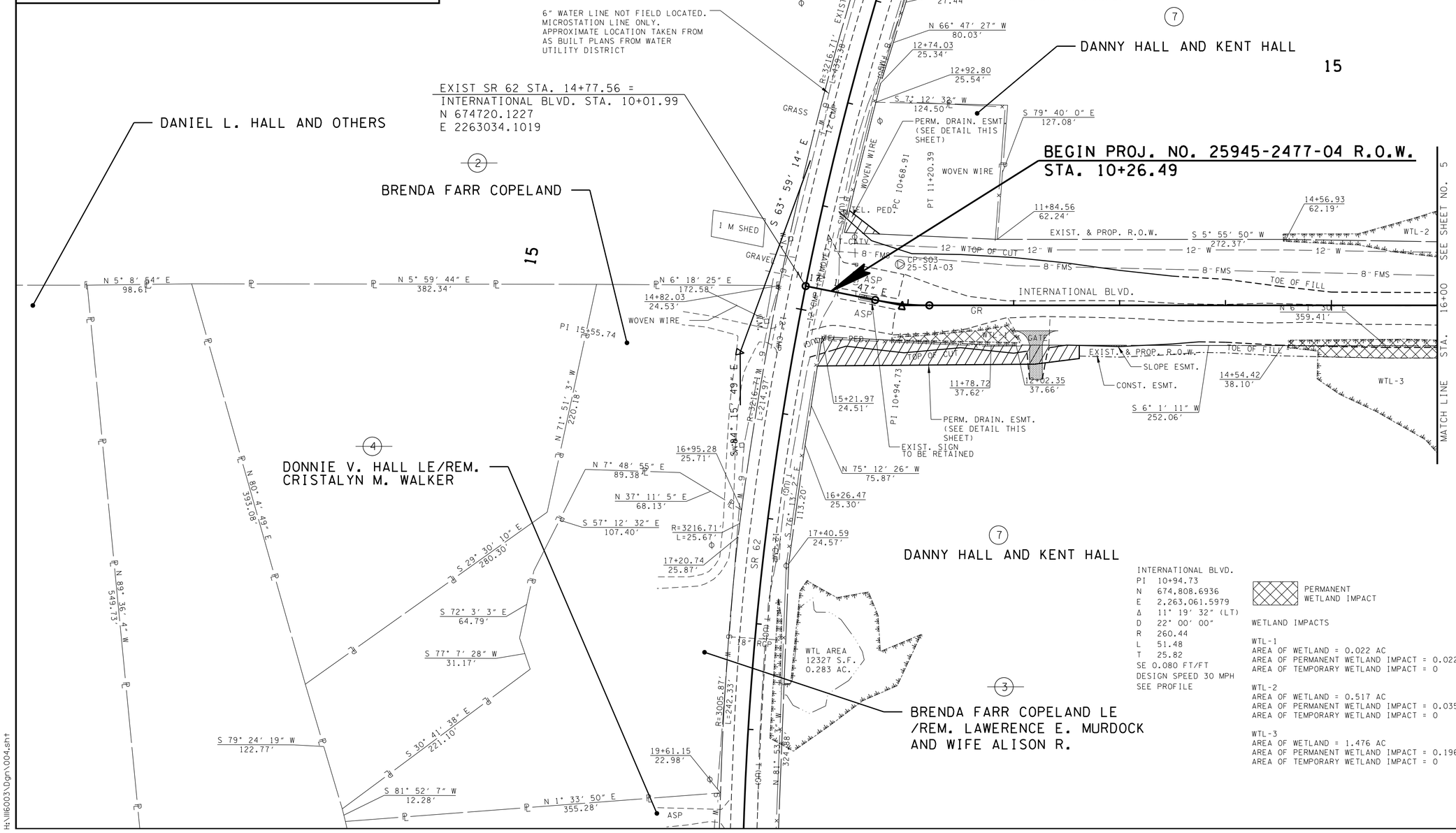


INTERNATIONAL BLVD.
PI 10+94.73
N 674,808.6936
E 2,263,061.5979
Δ 11° 19' 32" (LT)
D 22° 00' 00"
R 260.44
L 51.48
T 25.82
SE 0.080 FT/FT
DESIGN SPEED 30 MPH
SEE PROFILE

WETLAND IMPACTS

WTL-1
AREA OF WETLAND = 0.022 AC
AREA OF PERMANENT WETLAND IMPACT = 0.022 AC
AREA OF TEMPORARY WETLAND IMPACT = 0

WTL-2
AREA OF WETLAND = 0.517 AC
AREA OF PERMANENT WETLAND IMPACT = 0.035 AC
AREA OF TEMPORARY WETLAND IMPACT = 0

WTL-3
AREA OF WETLAND = 1.476 AC
AREA OF PERMANENT WETLAND IMPACT = 0.196 AC
AREA OF TEMPORARY WETLAND IMPACT = 0

**UNOFFICIAL SET**

**NOT FOR BIDDING**

SEALED BY

Brian H. Trotter
REGISTERED ENGINEER
No. 19810
STATE OF TENNESSEE

COORDINATES ARE NAD/83(1995), ARE DATUM ADJUSTED BY THE FACTOR OF 1.000120 AND TIED TO THE TGRN. ALL ELEVATIONS ARE REFERENCED TO THE NAVD 1988.

STATE OF TENNESSEE
DEPARTMENT OF TRANSPORTATION

# PRESENT LAYOUT

BEGIN PROJ. TO STA.16+00

SCALE: 1"= 50'

2/9/2015 1:08:12 PM
H:\Ill6003\Dgn\004.sht

| TYPE | YEAR | PROJECT NO. | SHEET NO. |
|---|---|---|---|
| R.O.W. | 2014 | 25945-2477-04 | 4A |
| CONST. | 2015 | 25945-3477-04 | 4A |
| | | | |
| | | | |

REV 09-19-14: REVISED REMAINDER WTL-3

EXIST. SR 62
PI 15+55.74
N 674,652.1024
E 2,263,089.9903
Δ 20° 16′ 35″ (LT)
D 1° 50′ 37″
R 3,107.93
L 1,099.86
T 555.74

INTERNATIONAL BLVD.
PI 0+94.73
N 674,811.1980
E 2,263,060.2376
Δ 11° 19′ 32″ (LT)
D 22° 00′ 00″
R 260.44
L 51.48
T 25.82
SE 0.080 FT/FT
DESIGN SPEED 30 MPH
SEE PROFILE

EXIST SR 62 STA. 14+77.56 =
INTERNATIONAL BLVD. STA. 10+01.99
N 674720.1227
E 2263034.1019

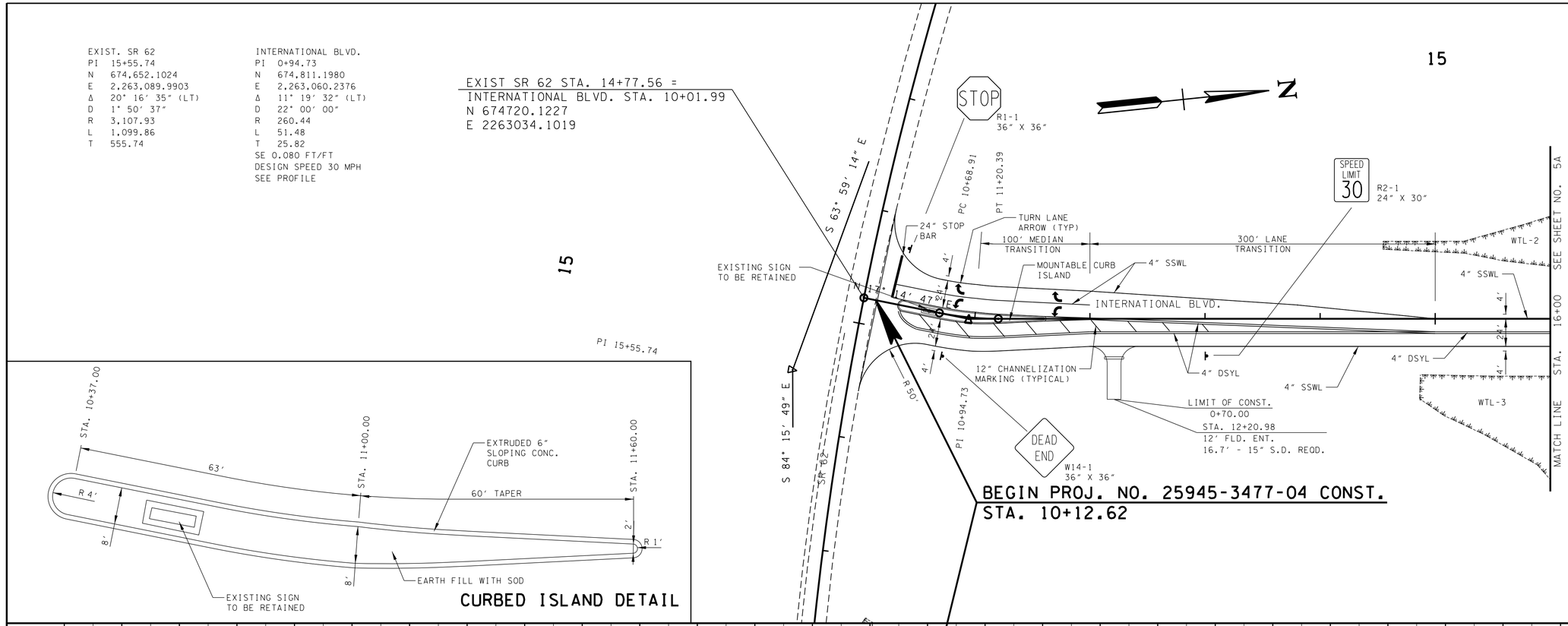





CURBED ISLAND DETAIL

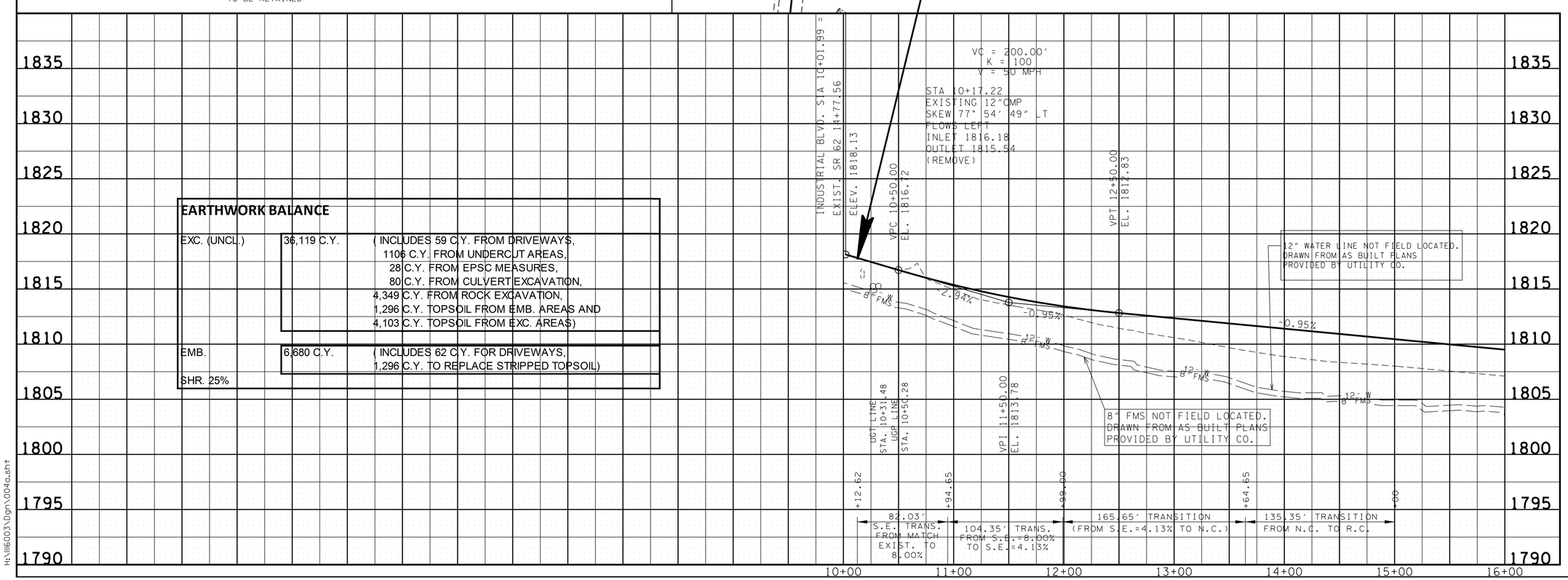


**EARTHWORK BALANCE**

| | | |
|---|---|---|
| EXC. (UNCL.) | 36,119 C.Y. | ( INCLUDES 59 C.Y. FROM DRIVEWAYS, 1106 C.Y. FROM UNDERCUT AREAS, 28 C.Y. FROM EPSC MEASURES, 80 C.Y. FROM CULVERT EXCAVATION, 4,349 C.Y. FROM ROCK EXCAVATION, 1,296 C.Y. TOPSOIL FROM EMB. AREAS AND 4,103 C.Y. TOPSOIL FROM EXC. AREAS) |
| EMB. | 6,680 C.Y. | ( INCLUDES 62 C.Y. FOR DRIVEWAYS, 1,296 C.Y. TO REPLACE STRIPPED TOPSOIL) |
| SHR. 25% | | |

**UNOFFICIAL SET**

**NOT FOR BIDDING**

SEALED BY

Brian H. Troller
REGISTERED ENGINEER
AGRICULTURE
COMMERCE
NO. 104210
STATE OF TENNESSEE

COORDINATES ARE NAD/83(1995), ARE DATUM ADJUSTED BY THE FACTOR OF 1.000120 AND TIED TO THE TGRN. ALL ELEVATIONS ARE REFERENCED TO THE NAVD 1988.

STATE OF TENNESSEE
DEPARTMENT OF TRANSPORTATION

PROPOSED LAYOUT AND PROFILE
BEGIN PROJ. TO STA.16+00
SCALE: 1″=50′ HORIZ.
1″=5′ VERT.

2/9/2015 1:08:12 PM
H:\1116003\Dgn\004a.sht

| TYPE | YEAR | PROJECT NO. | SHEET NO. |
|---|---|---|---|
| R.O.W. | 2014 | 25945-2477-04 | 5 |
| CONST. | 2015 | 25945-3477-04 | 5 |
| | | | |
| | | | |

REV 09-19-14: REVISED WETLAND IMPACT PATTERN AND WETLAND IMPACT AREAS WTL-2 & WTL-3

N

6

ESCOL NORMAN AND WIFE MAXINE

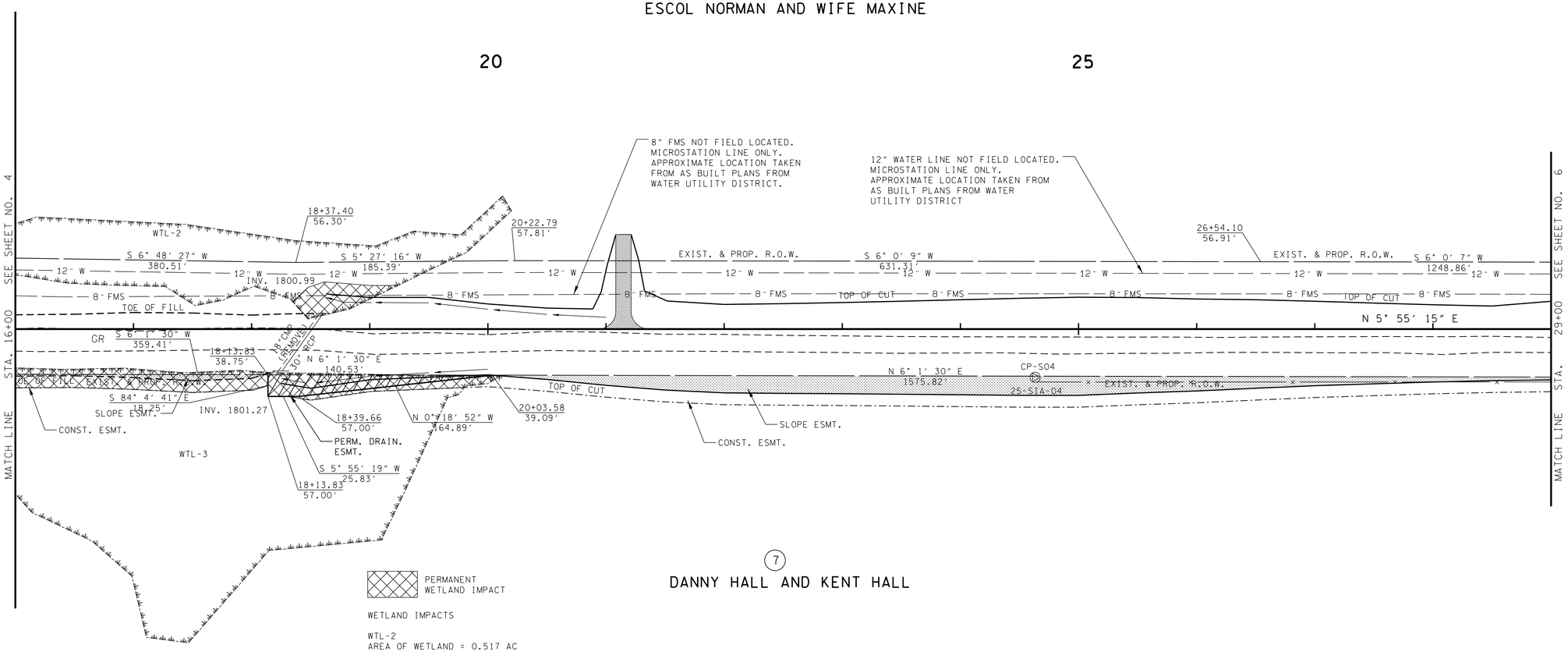


7

DANNY HALL AND KENT HALL

PERMANENT WETLAND IMPACT

WETLAND IMPACTS

WTL-2
AREA OF WETLAND = 0.517 AC
AREA OF PERMANENT WETLAND IMPACT = 0.035 AC
AREA OF TEMPORARY WETLAND IMPACT = 0

WTL-3
AREA OF WETLAND = 1.476 AC
AREA OF PERMANENT WETLAND IMPACT = 0.196 AC
AREA OF TEMPORARY WETLAND IMPACT = 0

**UNOFFICIAL SET**

**NOT FOR BIDDING**

SEALED BY

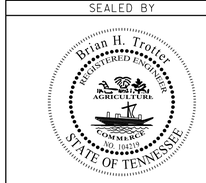


COORDINATES ARE NAD/83(1995), ARE DATUM ADJUSTED BY THE FACTOR OF 1.000120 AND TIED TO THE TGRN. ALL ELEVATIONS ARE REFERENCED TO THE NAVD 1988.

STATE OF TENNESSEE
DEPARTMENT OF TRANSPORTATION

# PRESENT LAYOUT

STA. 16+00 TO STA. 29+00

SCALE: 1"= 50'

2/9/2015 1:08:20 PM
H:\Ill6003\Dgn\005.sht

| TYPE | YEAR | PROJECT NO. | SHEET NO. |
|---|---|---|---|
| R.O.W. | 2014 | 25945-2477-04 | 5A |
| CONST. | 2015 | 25945-3477-04 | 5A |
| | | | |
| | | | |

REV 09-19-14: REVISED REMAINDER WTL-2 & WTL-3

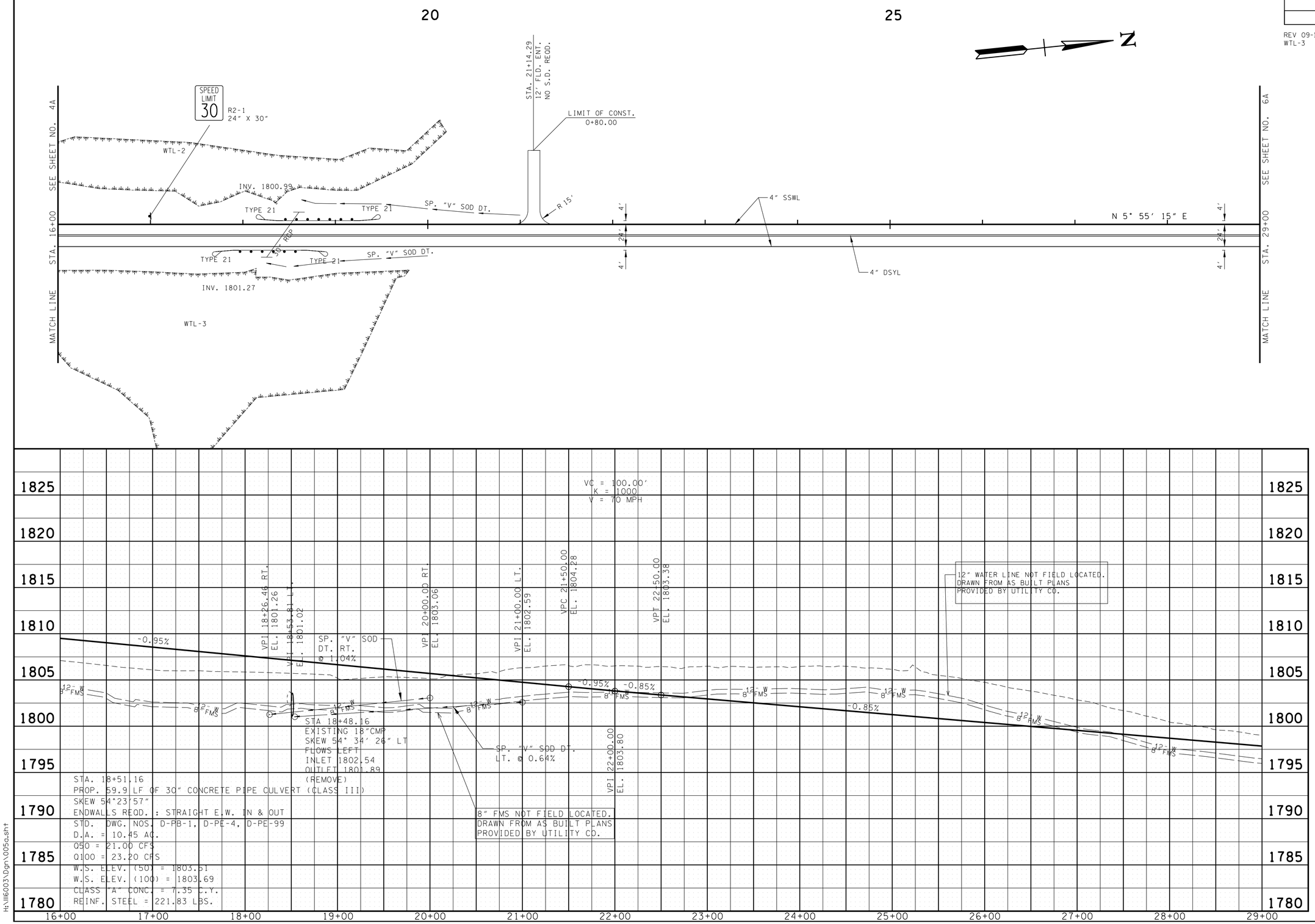


**UNOFFICIAL SET**

**NOT FOR BIDDING**

SEALED BY

Brian H. Trotter
REGISTERED ENGINEER
STATE OF TENNESSEE

COORDINATES ARE NAD/83(1995), ARE DATUM ADJUSTED BY THE FACTOR OF 1.000120 AND TIED TO THE TGRN. ALL ELEVATIONS ARE REFERENCED TO THE NAVD 1988.

STATE OF TENNESSEE
DEPARTMENT OF TRANSPORTATION

# PROPOSED LAYOUT AND PROFILE

STA. 16+00 TO STA. 29+00

SCALE: 1"= 50' HORIZ.
1"= 5' VERT.

2/9/2015 1:08:21PM
H:\116003\Dgn\005a.sht

| TYPE | YEAR | PROJECT NO. | SHEET NO. |
|---|---|---|---|
| R.O.W. | 2014 | 25945-2477-04 | 6 |
| CONST. | 2015 | 25945-3477-04 | 6 |
| | | | |
| | | | |

REV 09-19-14: REVISED IMPACT AREAS WTL-4

REV 10-20-14: ADDED BUILDING AND MODIFIED FENCE LOCATION ON TRACT 7 NEAR STA. 41+00 RT.

REV 12-05-14: REVISED AREA & IMPACT AREA WTL-4

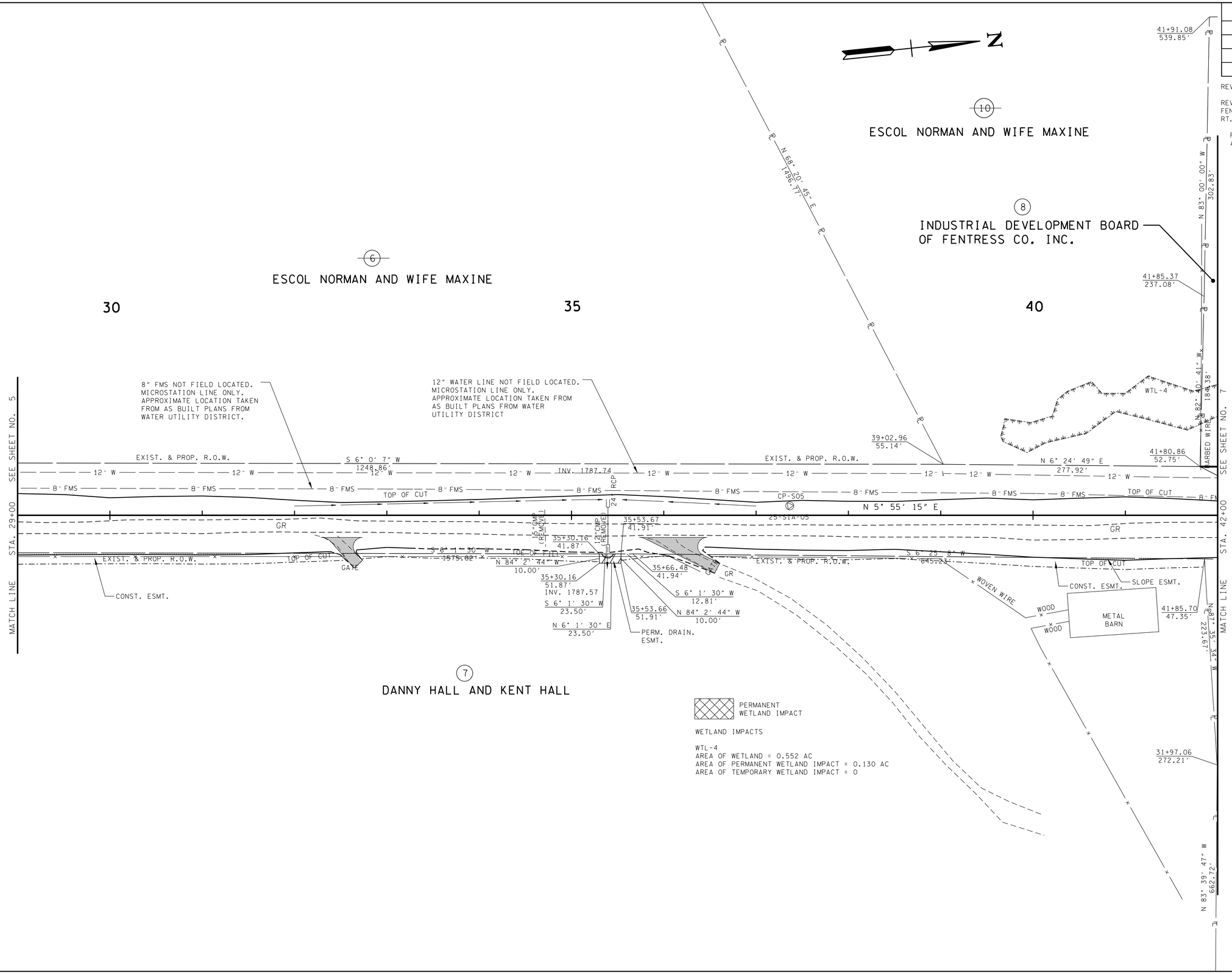


# UNOFFICIAL SET

## NOT FOR BIDDING

SEALED BY

Brian H. Trotter, REGISTERED ENGINEER, AGRICULTURE, COMMERCE, NO. 104339, STATE OF TENNESSEE

COORDINATES ARE NAD/83(1995), ARE DATUM ADJUSTED BY THE FACTOR OF 1.000120 AND TIED TO THE TGRN. ALL ELEVATIONS ARE REFERENCED TO THE NAVD 1988.

STATE OF TENNESSEE
DEPARTMENT OF TRANSPORTATION

# PRESENT LAYOUT

STA. 29+00 TO STA. 42+00

SCALE: 1"= 50'

2/9/2015 1:08:22 PM
H:\116003\Dgn\006.sht

| TYPE | YEAR | PROJECT NO. | SHEET NO. |
|---|---|---|---|
| R.O.W. | 2014 | 25945-2477-04 | 6A |
| CONST. | 2015 | 25945-3477-04 | 6A |
| | | | |
| | | | |

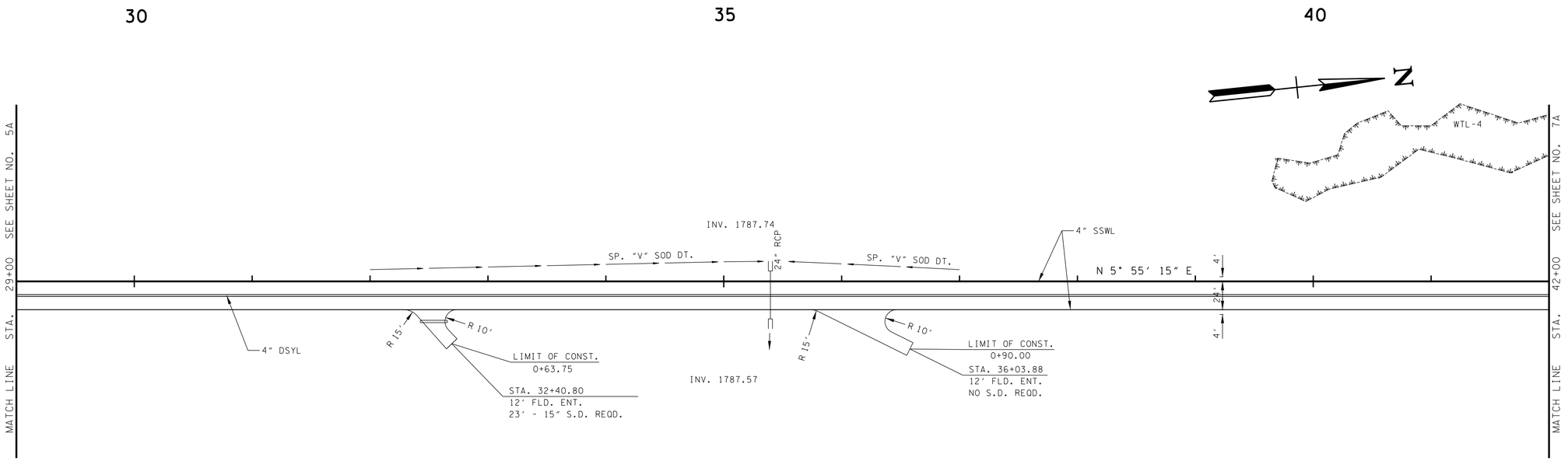


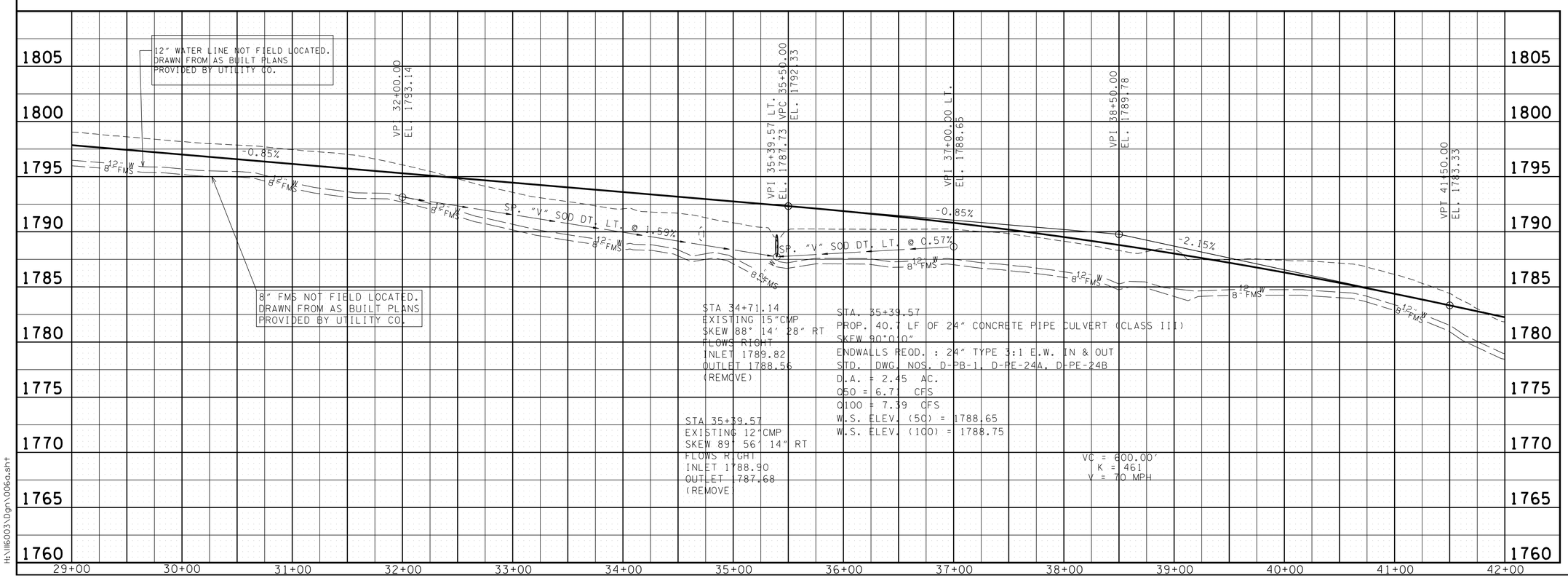


# UNOFFICIAL SET

## NOT FOR BIDDING

SEALED BY

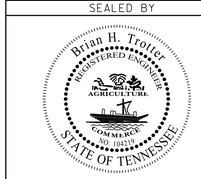


COORDINATES ARE NAD/83(1995), ARE DATUM ADJUSTED BY THE FACTOR OF 1.000120 AND TIED TO THE TGRN. ALL ELEVATIONS ARE REFERENCED TO THE NAVD 1988.

STATE OF TENNESSEE
DEPARTMENT OF TRANSPORTATION

## PROPOSED LAYOUT AND PROFILE

STA. 29+00 TO STA. 42+00

SCALE: 1"=50 ' HORIZ.
1"=5 ' VERT.

2/9/2015 1:08:22 PM
H:\116003\Dgn\006a.sht

| TYPE | YEAR | PROJECT NO. | SHEET NO. |
|---|---|---|---|
| R.O.W. | 2014 | 25945-2477-04 | 7 |
| CONST. | 2015 | 25945-3477-04 | 7 |
| | | | |
| | | | |

REV 09-19-14: REVISED IMPACT AREA AND PATTERNING WTL-4

REV 12-05-14: REVISED AREA & IMPACT AREA WTL-4, REVISED WTL-4 SHAPE

REV 01-15-15: REVISED DITCHES & SLOPE LINES LT & RT STA. 48+50 TO 54+00; REVISED SLOPE & CONST ESMT. STA. 48+50 TO 53+00 RT

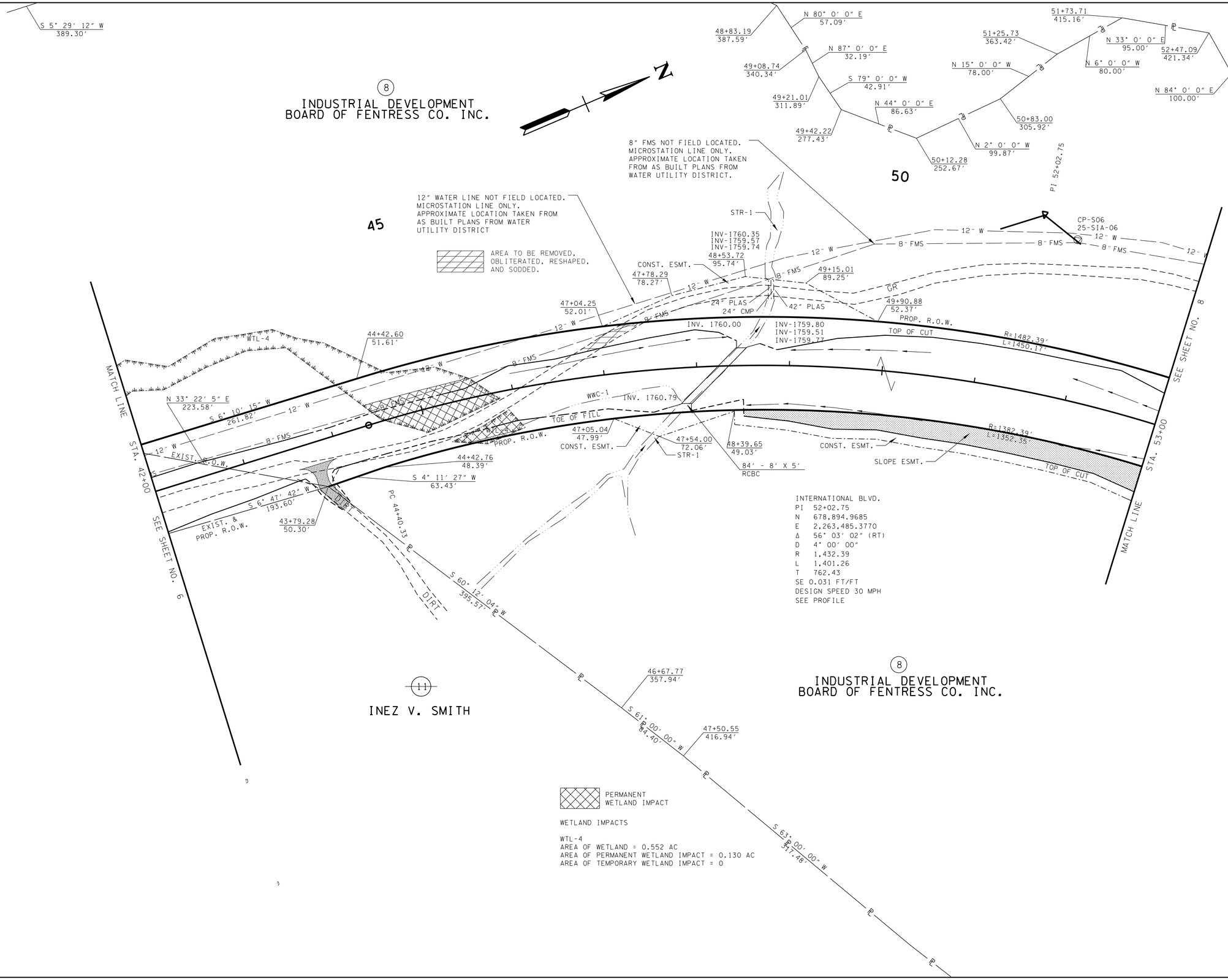


**UNOFFICIAL SET**

**NOT FOR BIDDING**

SEALED BY

Brian H. Trotter
REGISTERED ENGINEER
AGRICULTURE
COMMERCE
NO. 108191
STATE OF TENNESSEE

COORDINATES ARE NAD/83(1995), ARE DATUM ADJUSTED BY THE FACTOR OF 1.000120 AND TIED TO THE TGRN. ALL ELEVATIONS ARE REFERENCED TO THE NAVD 1988.

STATE OF TENNESSEE
DEPARTMENT OF TRANSPORTATION

# PRESENT LAYOUT

STA. 42+00 TO STA. 53+00

SCALE: 1"= 50'

2/9/2015 1:08:23 PM
H:\116003\Dgn\007.sht

| TYPE | YEAR | PROJECT NO. | SHEET NO. |
|---|---|---|---|
| R.O.W. | 2014 | 25945-2477-04 | 7A |
| CONST. | 2015 | 25945-3477-04 | 7A |
| | | | |
| | | | |

REV 09-19-14: REVISED WETLAND REMAINDER WTL-4

REV 12-05-14: REVISED WETLAND REMAINDER WTL-4

REV 01-15-15: ADDED SP. DT. LT & RT STA. 48+50 TO 50+50 & 52+00 TO 53+00 IN PLAN & PROFILE

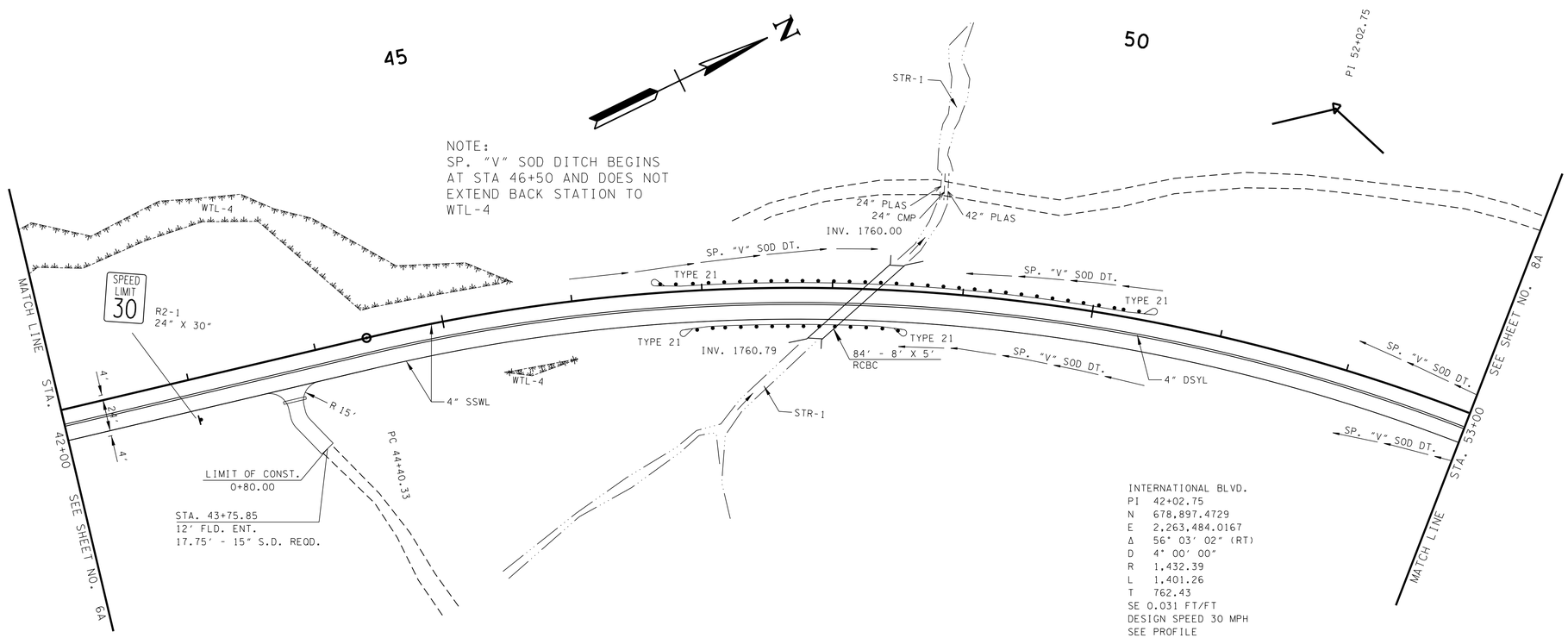


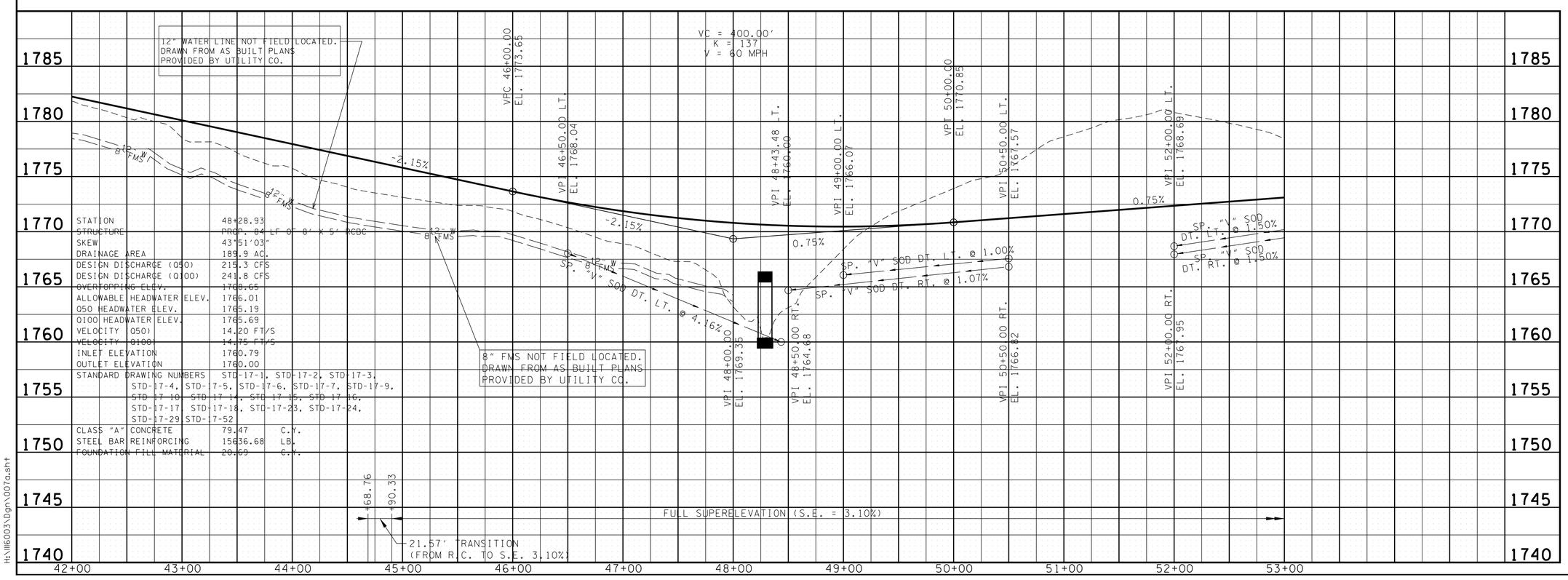


**UNOFFICIAL SET**

**NOT FOR BIDDING**

SEALED BY

COORDINATES ARE NAD/83(1995), ARE DATUM ADJUSTED BY THE FACTOR OF 1.000120 AND TIED TO THE TGRN. ALL ELEVATIONS ARE REFERENCED TO THE NAVD 1988.

STATE OF TENNESSEE
DEPARTMENT OF TRANSPORTATION

# PROPOSED LAYOUT AND PROFILE

STA. 42+00 TO STA. 53+00

SCALE: 1"= 50' HORIZ.
1"= 5' VERT.

2/9/2015 1:08:23 PM
H:\116003\Dgn\007a.sht

| TYPE | YEAR | PROJECT NO. | SHEET NO. |
|---|---|---|---|
| R.O.W. | 2014 | 25945-2477-04 | 8 |
| CONST. | 2015 | 25945-3477-04 | 8 |
| | | | |
| | | | |

REV 09-19-14: REVISED IMPACT LEGEND

REV 01-15-15: REVISED SP. DITCHES LT & RT. REVISED SLOPE & CONST. ESMT. LT. & RT. STA. 53+00 TO 54+00

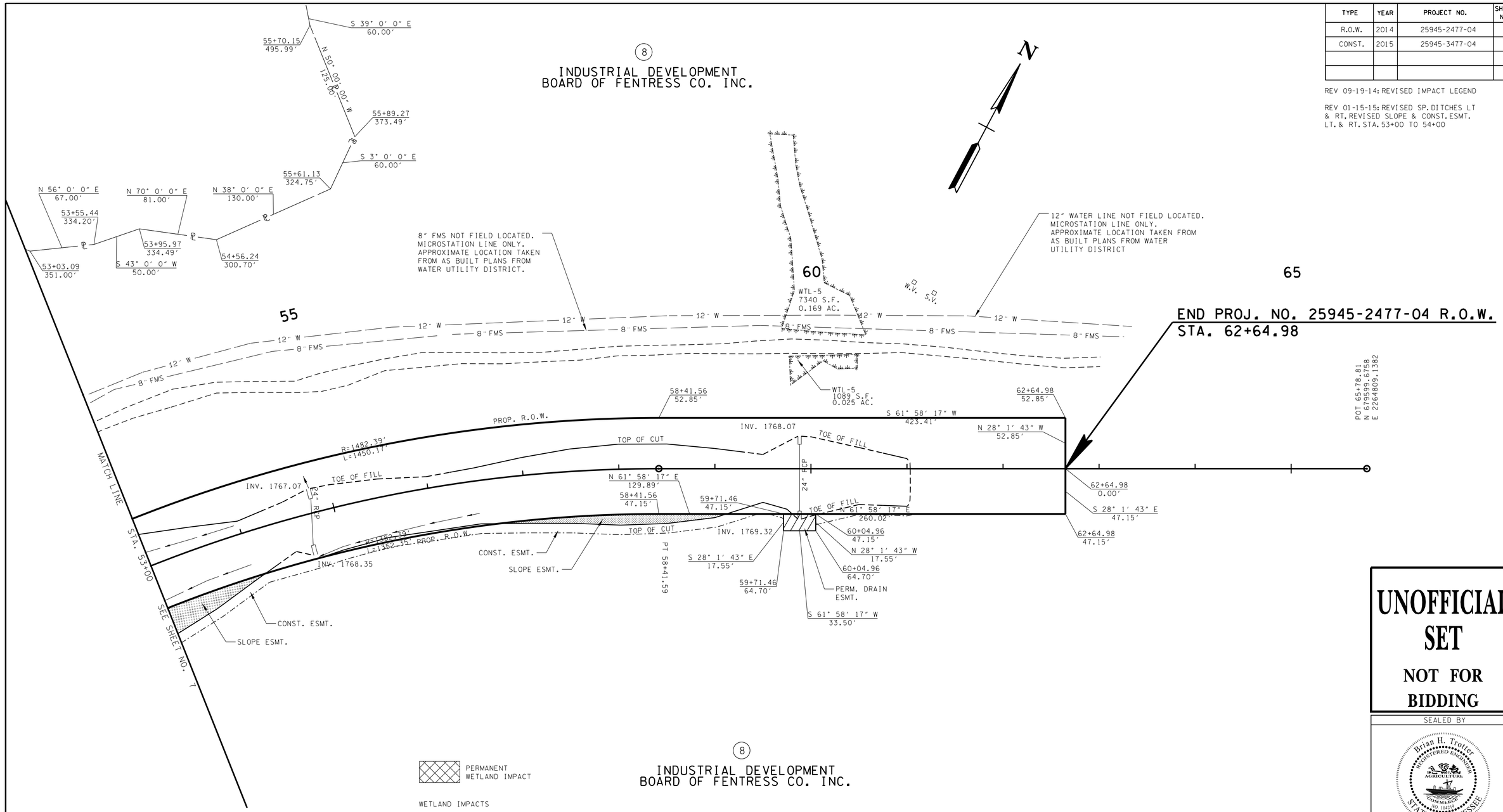


PERMANENT WETLAND IMPACT

WETLAND IMPACTS

WTL-5
AREA OF WETLAND = 0.194 AC
AREA OF PERMANENT WETLAND IMPACT = 0
AREA OF TEMPORARY WETLAND IMPACT = 0

8
INDUSTRIAL DEVELOPMENT
BOARD OF FENTRESS CO. INC.

**UNOFFICIAL SET**

**NOT FOR BIDDING**

SEALED BY

COORDINATES ARE NAD/83(1995), ARE DATUM ADJUSTED BY THE FACTOR OF 1.000120 AND TIED TO THE TGRN. ALL ELEVATIONS ARE REFERENCED TO THE NAVD 1988.

STATE OF TENNESSEE
DEPARTMENT OF TRANSPORTATION

# PRESENT LAYOUT

STA. 53+00 TO END PROJ.

SCALE: 1″= 50′

2/9/2015 4:08:24 PM
H:\Ill6003\Dgn\008.sht

| TYPE | YEAR | PROJECT NO. | SHEET NO. |
|---|---|---|---|
| R.O.W. | 2014 | 25945-2477-04 | 8A |
| CONST. | 2015 | 25945-3477-04 | 8A |
| | | | |
| | | | |

REV 01-15-15: REVISED SP. DITCHES LT & RT STA. 53+00 TO 54+00

POT 65+78.81
N 679599.6758
E 2264809.1382

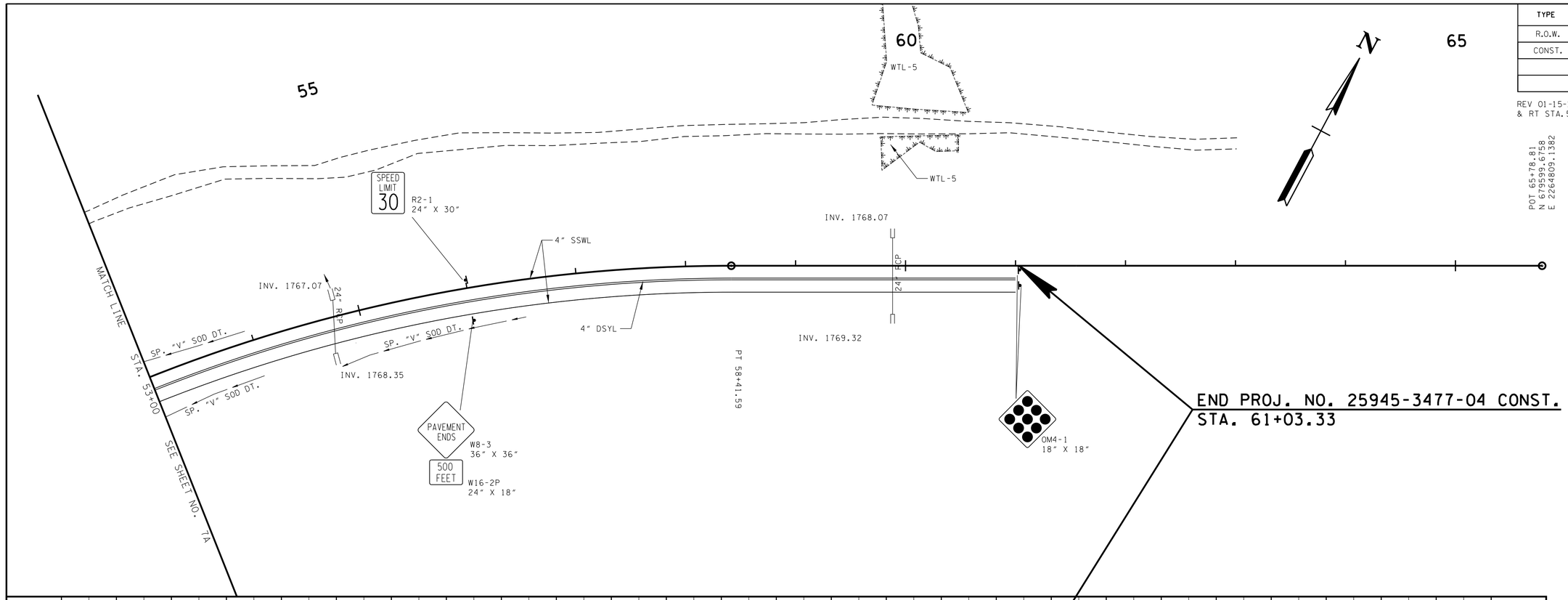


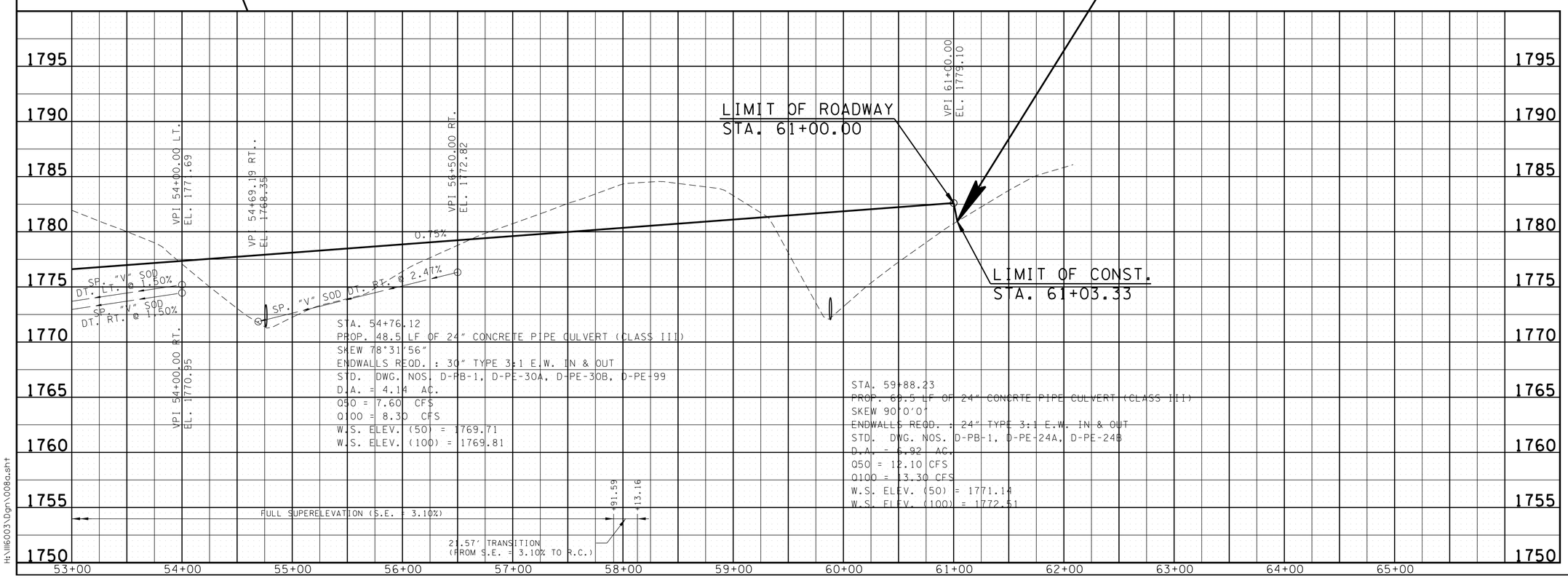


# UNOFFICIAL SET

## NOT FOR BIDDING

SEALED BY

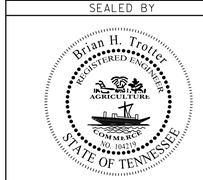


COORDINATES ARE NAD/83(1995), ARE DATUM ADJUSTED BY THE FACTOR OF 1.000120 AND TIED TO THE TGRN. ALL ELEVATIONS ARE REFERENCED TO THE NAVD 1988.

STATE OF TENNESSEE
DEPARTMENT OF TRANSPORTATION

PROPOSED LAYOUT AND PROFILE
STA. 53+00 TO END PROJ.
SCALE: 1"=50' HORIZ.
1"=5' VERT.

2/9/2015 1:08:24 PM
H:\116003\Dgn\008a.sht

| TYPE | YEAR | PROJECT NO. | SHEET NO. |
|---|---|---|---|
| R.O.W. | 2014 | 25945-2477-04 | 9 |
| CONST. | 2015 | 25945-3477-04 | 9 |
| | | | |
| | | | |

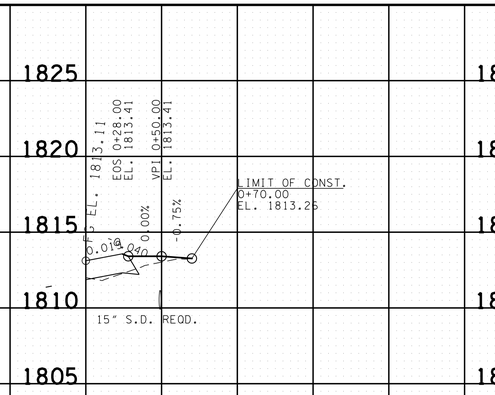


PVT. DR. RT. 12+20.98
TRACT NO. 7

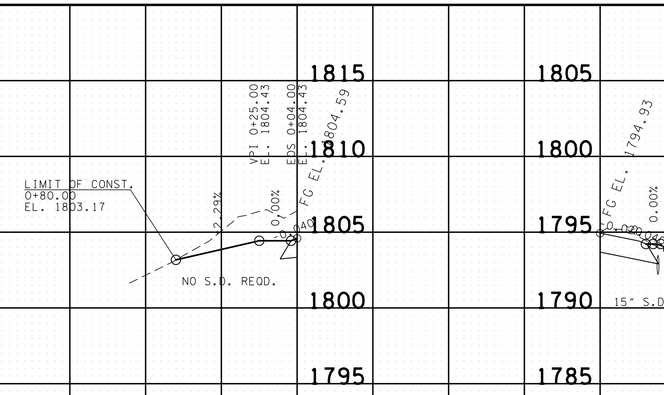


FLD. ENT. LT. 21+14.29
TRACT NO. 6

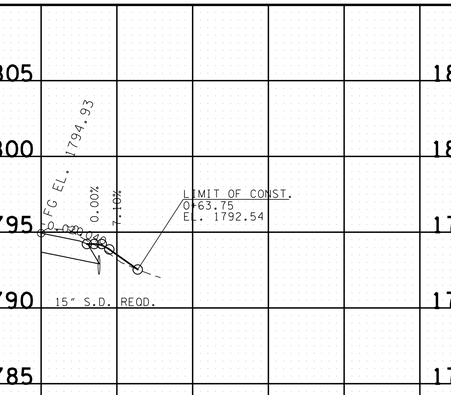


FLD. ENT. RT. 32+40.80
TRACT NO. 7

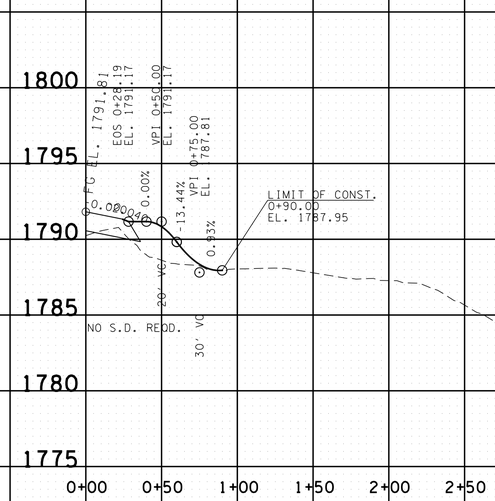


FLD. ENT. RT. 36+03.88
TRACT NO. 9

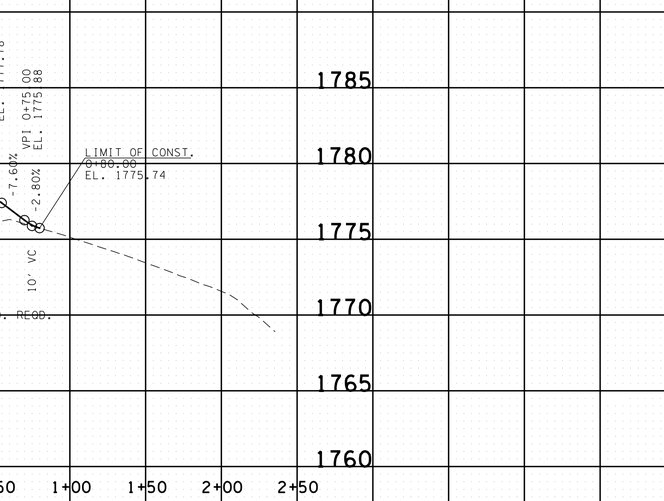


FLD. ENT. RT. 43+75.85
TRACT NO. 11

**UNOFFICIAL SET**

**NOT FOR BIDDING**

SEALED BY

STATE OF TENNESSEE
DEPARTMENT OF TRANSPORTATION

PROFILE OF PRIVATE DRIVES

SCALE: 1"= 50' HORIZ.
1"= 5' VERT.

2/9/2015 1:08:25 PM
H:\II6003\Dgn\009.sht

| TYPE | YEAR | PROJECT NO. | SHEET NO. |
|---|---|---|---|
| R.O.W. | 2014 | 25945-2477-04 | 10 |
| CONST. | 2015 | 25945-3477-04 | 10 |
| | | | |
| | | | |

REV 12-05-14: REVISED WTL-4

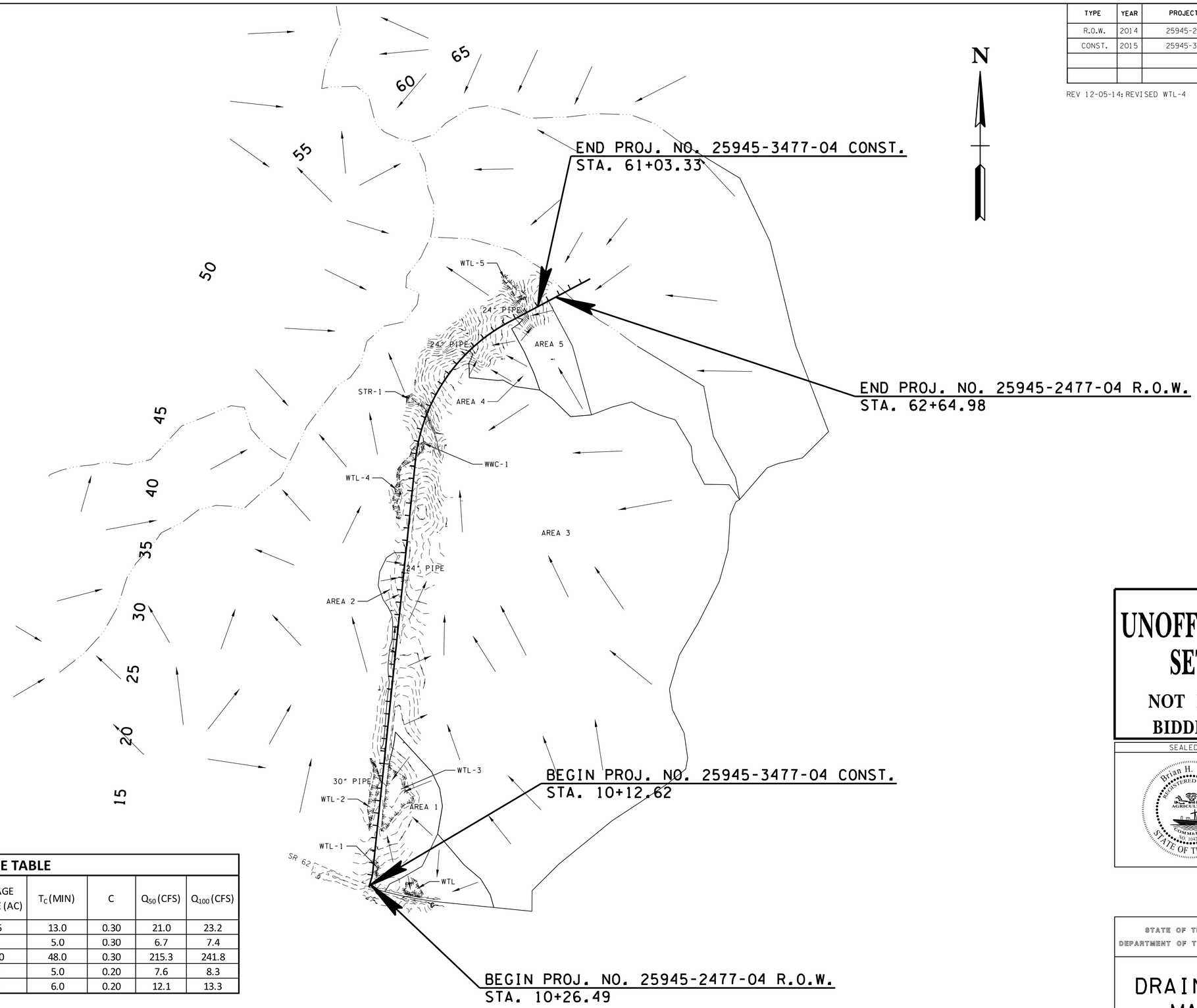


## DRAINAGE TABLE

| DRAINAGE AREA | LOCATION | STRUCTURE | DRAINAGE AREA SIZE (AC) | $T_C$ (MIN) | C | $Q_{50}$ (CFS) | $Q_{100}$ (CFS) |
|---|---|---|---|---|---|---|---|
| 1 | 18+51.16 | 30" PIPE | 10.45 | 13.0 | 0.30 | 21.0 | 23.2 |
| 2 | 35+39.57 | 24" PIPE | 2.45 | 5.0 | 0.30 | 6.7 | 7.4 |
| 3 | 48+28.93 | 8' X 5' RCBC | 189.90 | 48.0 | 0.30 | 215.3 | 241.8 |
| 4 | 54+76.12 | 24" PIPE | 4.14 | 5.0 | 0.20 | 7.6 | 8.3 |
| 5 | 59+88.23 | 24" PIPE | 6.92 | 6.0 | 0.20 | 12.1 | 13.3 |

**UNOFFICIAL SET**

**NOT FOR BIDDING**

SEALED BY

Brian H. Trotter
REGISTERED ENGINEER
DEPARTMENT OF AGRICULTURE
DEPARTMENT OF COMMERCE
JOB NUMBER
STATE OF TENNESSEE

STATE OF TENNESSEE
DEPARTMENT OF TRANSPORTATION

# DRAINAGE MAP

SCALE: 1"=400'

2/9/2015 1:08:26 PM
H:\11G003\Dgn\010.sht

| TYPE | YEAR | PROJECT NO. | SHEET NO. |
|---|---|---|---|
| R.O.W. | 2014 | 25945-2477-04 | 11 |
| CONST. | 2015 | 25945-3477-04 | 11 |

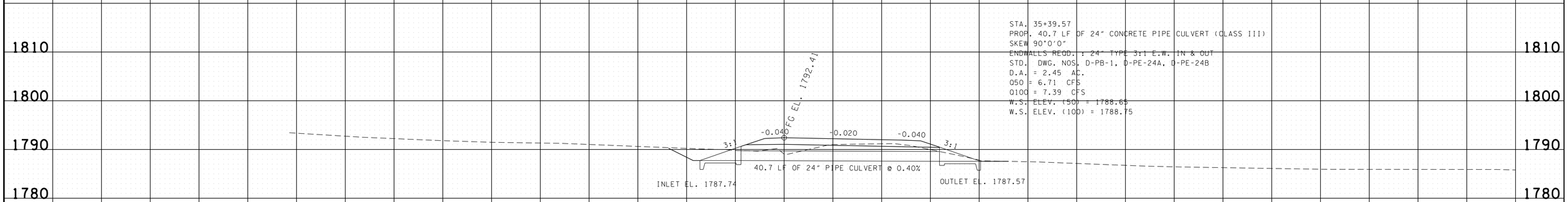


STA. 35+39.57
PROP. 40.7 LF OF 24" CONCRETE PIPE CULVERT (CLASS III)
SKEW 90°0'0"
ENDWALLS REQD. : 24" TYPE 3:1 E.W. IN & OUT
STD. DWG. NOS. D-PB-1, D-PE-24A, D-PE-24B
D.A. = 2.45 AC.
Q50 = 6.71 CFS
Q100 = 7.39 CFS
W.S. ELEV. (50) = 1788.65
W.S. ELEV. (100) = 1788.75

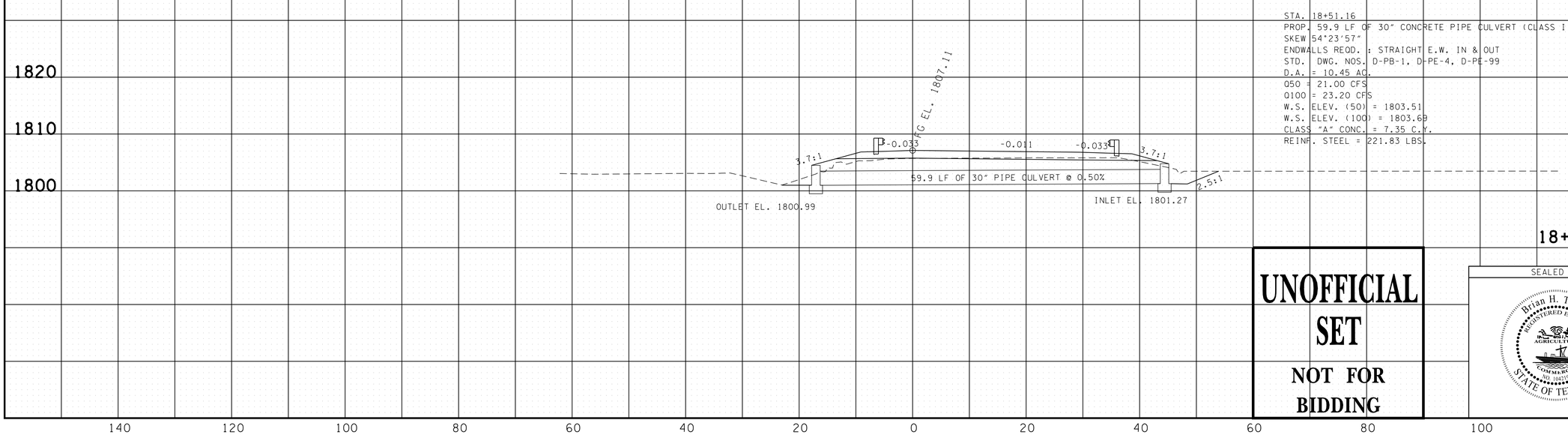


STA. 18+51.16
PROP. 59.9 LF OF 30" CONCRETE PIPE CULVERT (CLASS III)
SKEW 54°23'57"
ENDWALLS REQD. : STRAIGHT E.W. IN & OUT
STD. DWG. NOS. D-PB-1, D-PE-4, D-PE-99
D.A. = 10.45 AC.
Q50 = 21.00 CFS
Q100 = 23.20 CFS
W.S. ELEV. (50) = 1803.51
W.S. ELEV. (100) = 1803.69
CLASS "A" CONC. = 7.35 C.Y.
REINF. STEEL = 221.83 LBS.

**UNOFFICIAL SET**

**NOT FOR BIDDING**

SEALED BY

Brian H. Troter
REGISTERED ENGINEER
STATE OF TENNESSEE

STATE OF TENNESSEE
DEPARTMENT OF TRANSPORTATION

# CULVERT CROSS-SECTIONS

STA. 18+51.16
TO
STA. 35+39.57

SCALE: 1"=10' HORIZ.
1"=10' VERT.

140 120 100 80 60 40 20 0 20 40 60 80 100 120 140

2/9/2015 3:39:51PM
H:\II6003\Dgn\VESIACulvert+XS.sht

| TYPE | YEAR | PROJECT NO. | SHEET NO. |
|---|---|---|---|
| R.O.W. | 2014 | 25945-2477-04 | 11A |
| CONST. | 2015 | 25945-3477-04 | 11A |

STA. 54+76.12
PROP. 48.5 LF OF 24" CONCRETE PIPE CULVERT (CLASS III)
SKEW 78°31'56"
ENDWALLS REQD. : 30" TYPE 3:1 F.W. IN & OUT
STD. DWG. NOS. D-PB-1, D-PE-30A, D-PE-30B, D-PE-99
D.A. = 4.14 AC.
Q50 = 7.60 CFS
Q100 = 8.30 CFS
W.S. ELEV. (50) = 1769.71
W.S. ELEV. (100) = 1769.81

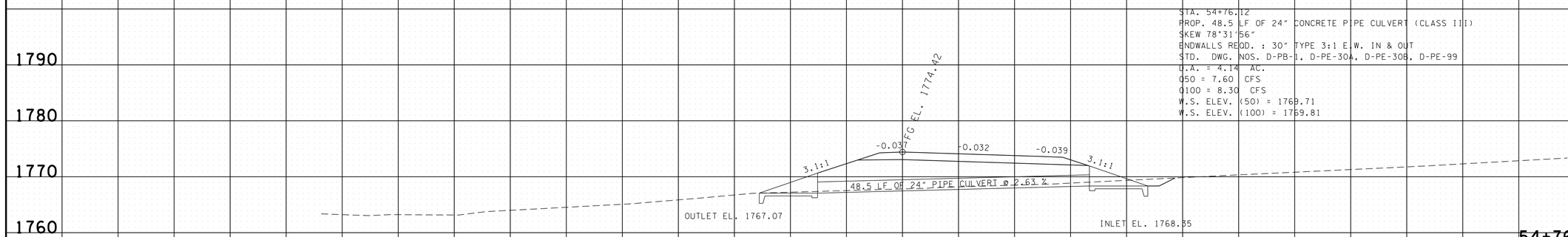


| | |
|---|---|
| STATION | 48+28.93 |
| STRUCTURE | PROP. 84 LF OF 8' X 5' RCBC |
| SKEW | 43°51'03" |
| DRAINAGE AREA | 189.9 AC. |
| DESIGN DISCHARGE (Q50) | 215.3 CFS |
| DESIGN DISCHARGE (Q100) | 241.8 CFS |
| OVERTOPPING ELEV. | 1768.65 |
| ALLOWABLE HEADWATER ELEV. | 1766.01 |
| Q50 HEADWATER ELEV. | 1765.19 |
| Q100 HEADWATER ELEV. | 1765.69 |
| VELOCITY (Q50) | 14.20 FT/S |
| VELOCITY (Q100) | 14.75 FT/S |
| INLET ELEVATION | 1760.79 |
| OUTLET ELEVATION | 1760.00 |
| STANDARD DRAWING NUMBERS | STD-17-1, STD-17-2, STD-17-3, STD-17-4, STD-17-5, STD-17-6, STD-17-7, STD-17-9, STD-17-10, STD-17-14, STD-17-15, STD-17-16, STD-17-17, STD-17-18, STD-17-23, STD-17-24, STD-17-29, STD-17-52 |
| CLASS "A" CONCRETE | 79.47 C.Y. |
| STEEL BAR REINFORCING | 15636.68 LB. |
| FOUNDATION FILL MATERIAL | 20.69 C.Y. |

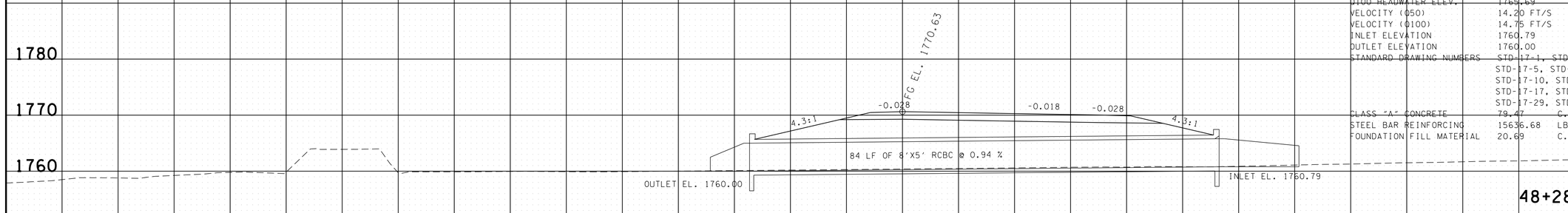


**UNOFFICIAL SET**

**NOT FOR BIDDING**

SEALED BY

Brian H. Trotter
REGISTERED ENGINEER
DEPARTMENT OF AGRICULTURE
DEPARTMENT OF COMMERCE
NO. 104319
STATE OF TENNESSEE

STATE OF TENNESSEE
DEPARTMENT OF TRANSPORTATION

# CULVERT CROSS-SECTIONS

STA. 48+28.93
TO
STA. 54+76.12

SCALE: 1"=10' HORIZ.
1"=10' VERT.

140 120 100 80 60 40 20 0 20 40 60 80 100 120 140

2/9/2015 3:39:51PM
H:\IIG003\Dgn\VESIACulvert+XS.sht

| TYPE | YEAR | PROJECT NO. | SHEET NO. |
|---|---|---|---|
| R.O.W. | 2014 | 25945-2477-04 | 11B |
| CONST. | 2015 | 25945-3477-04 | 11B |

STA. 59+88.23
PROP. 69.5 LF OF 24" CONCRTE PIPE CULVERT (CLASS III)
SKEW 90°0'0"
ENDWALLS REQD. : 24" TYPE 3:1 E.W. IN & OUT
STD. DWG. NOS. D-PB-1, D-PE-24A, D-PE-24B
D.A. = 6.92 AC.
Q50 = 12.10 CFS
Q100 = 13.30 CFS
W.S. ELEV. (50) = 1771.14
W.S. ELEV. (100) = 1772.51

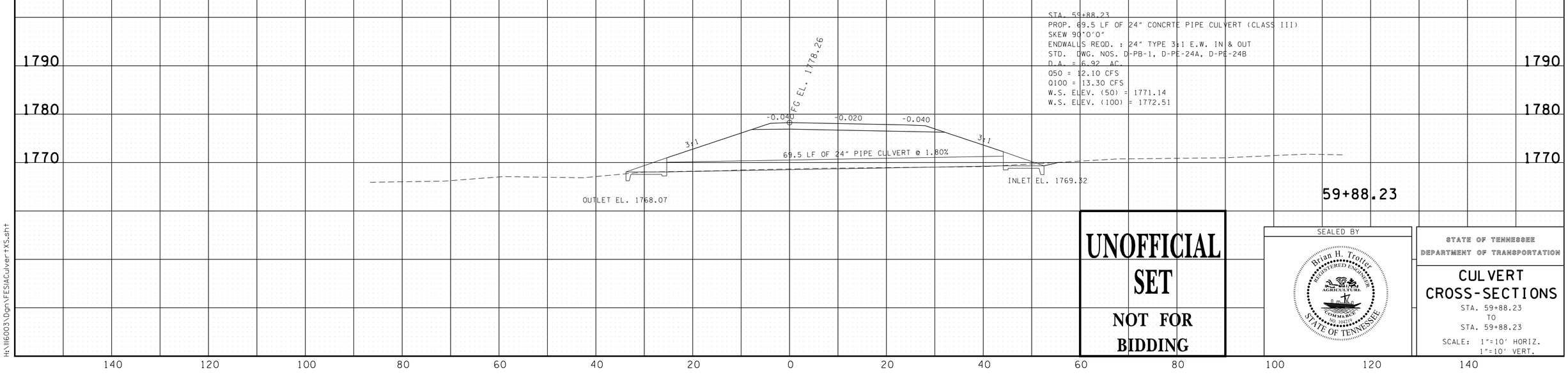


UNOFFICIAL SET

NOT FOR BIDDING

SEALED BY

Brian H. Trotter
REGISTERED ENGINEER
STATE OF TENNESSEE

STATE OF TENNESSEE
DEPARTMENT OF TRANSPORTATION

# CULVERT CROSS-SECTIONS

STA. 59+88.23
TO
STA. 59+88.23

SCALE: 1"=10' HORIZ.
1"=10' VERT.

2/9/2015 3:39:52 PM
H:\116003\Dgn\FESIACulvert-XS.sht

| TYPE | YEAR | PROJECT NO. | SHEET NO. |
|---|---|---|---|
| R.O.W. | 2014 | 25945-2477-04 | 12 |
| CONST. | 2015 | 25945-3477-04 | 12 |
| | | | |
| | | | |

# EROSION PREVENTION AND SEDIMENT CONTROL NOTES

## STREAM/WETLAND

(1) ANY WORK WITHIN THE STREAM CHANNEL AREA (E.G., FOR PIER FOOTING, RIP-RAP PLACEMENT, MULTI-BARREL CULVERT/BRIDGE CONSTRUCTION, ETC.) SHALL BE SEPARATED FROM FLOWING WATER OR EXPECTED FLOW PATH AND PERFORMED DURING LOW FLOW CONDITIONS. ALL ITEMS USED WITHIN THE STREAM CHANNEL AREA FOR DIVERSION OF FLOW (OR EXPECTED FLOW), UNLESS SPECIFIED IN THE PLANS, SHALL NOT BE PAID FOR DIRECTLY BUT SHALL BE INCLUDED IN THE COST OF OTHER ITEMS. THIS NOTE EXCLUDES ANY ITEMS SPECIFIED IN THE PLANS FOR THE TEMPORARY DIVERSION CHANNELS, EC-STR-31 AND TEMPORARY DIVERSION CULVERTS, EC-STR-32 FOR SINGLE BARREL CULVERT CONSTRUCTION.

(2) A 30 FOOT NATURAL RIPARIAN BUFFER ZONE ADJACENT TO AND ON BOTH SIDES OF THE RECEIVING STREAM SHALL BE PRESERVED, TO THE MAXIMUM EXTENT PRACTICABLE, DURING CONSTRUCTION ACTIVITIES AT THE SITE. BUFFER ZONES ARE NOT SEDIMENT CONTROL MEASURES AND SHOULD NOT BE RELIED UPON AS PRIMARY SEDIMENT CONTROL MEASURES. THE RIPARIAN BUFFER ZONE SHALL BE ESTABLISHED BETWEEN THE TOP OF THE STREAM BANK AND THE DISTURBED CONSTRUCTION AREA. THE 30 FOOT CRITERION FOR THE WIDTH OF THE BUFFER ZONE CAN BE ESTABLISHED ON AN AVERAGE WIDTH BASIS AT A PROJECT, AS LONG AS THE MINIMUM WIDTH OF THE BUFFER ZONE IS MORE THAN 15 FEET AT ANY MEASURED LOCATION. EVERY ATTEMPT SHALL BE MADE FOR CONSTRUCTION ACTIVITIES NOT TO TAKE PLACE WITHIN THE BUFFER ZONES. BEST MANAGEMENT PRACTICES (BMPS) PROVIDING EQUIVALENT PROTECTION AS THE NATURAL RIPARIAN ZONE MAY BE USED. A JUSTIFICATION FOR USE AND DESIGN EQUIVALENCY SHALL BE DOCUMENTED WITHIN THE SWPPP. THE ENVIRONMENTAL AND ROADWAY DESIGN DIVISIONS SHALL REVIEW AND APPROVE THIS REVISION OF THE SWPPP BEFORE DISTURBANCE OF THE SITE PROCEEDS, UNLESS PREVIOUSLY EXEMPT IN THE NPDES CONSTRUCTION GENERAL PERMIT. WHERE ISSUED, ARAP/401 REQUIREMENTS WILL PREVAIL IF IN CONFLICT WITH THESE BUFFER ZONE REQUIREMENTS.

## NPDES

(3) NO WORK SHALL BE STARTED UNTIL THE CONTRACTOR'S PLAN FOR THE STAGING OF THEIR OPERATIONS, INCLUDING THE PLAN FOR STAGING OF TEMPORARY AND PERMANENT EPSC MEASURES, HAS BEEN ACCEPTED BY THE ENGINEER. THE CONTRACTOR'S EPSC PLAN SHALL INCORPORATE AND SUPPLEMENT, AS ACCEPTABLE, THE BASIC EPSC DEVICES ON THE EPSC PLAN CONTAINED IN THE APPROVED SWPPP.

(4) THE EPSC MEASURES AND/OR PLAN SHALL BE MODIFIED AS NECESSARY SO THAT THEY ARE EFFECTIVE AT ALL TIMES THROUGHOUT THE COURSE OF THE PROJECT.

(5) THE ACCEPTED EPSC PLAN SHALL REQUIRE THAT EPSC MEASURES BE IN PLACE BEFORE CLEARING, GRUBBING, EXCAVATION, GRADING, CUTTING OR FILLING OCCURS, EXCEPT AS SUCH WORK MAY BE NECESSARY TO INSTALL EPSC MEASURES, INCLUDING WITHOUT LIMITATION AS FOLLOWS:

A. INITIAL CLEARING AND GRUBBING SHALL BE LIMITED TO THAT NECESSARY FOR THE INSTALLATION OF APPLICABLE EPSC MEASURES IN ACCORDANCE WITH THE ACCEPTED EPSC PLAN INCORPORATED INTO THE SWPPP.

B. NO OTHER CLEARING AND GRUBBING OPERATIONS SHALL BE STARTED BEFORE APPLICABLE EPSC MEASURES ARE IN PLACE IN ACCORDANCE WITH THE ACCEPTED EPSC PLAN INCORPORATED INTO THE SWPPP.

C. NO CULVERT OR BRIDGE CONSTRUCTION SHALL BE STARTED BEFORE APPLICABLE EPSC MEASURES ARE IN PLACE IN ACCORDANCE WITH THE ACCEPTED EPSC PLAN INCORPORATED INTO THE SWPPP.

D. NO GRADING, EXCAVATION, CUTTING, FILLING, OR OTHER EARTHWORK SHALL BE STARTED BEFORE EPSC MEASURES ARE IN PLACE IN ACCORDANCE WITH THE ACCEPTED EPSC PLAN INCORPORATED INTO THE SWPPP.

(6) PERMANENT EPSC MEASURES SHALL BE INITIATED WITHIN 14 CALENDAR DAYS AFTER FINAL GRADING OF ANY SEQUENCE OR PHASE. TEMPORARY OR PERMANENT STABILIZATION SHALL BE INITIATED WITHIN 14 CALENDAR DAYS AFTER FINAL GRADING OR WHEN CONSTRUCTION ACTIVITIES ON A PORTION OF THE SITE ARE TEMPORARILY CEASED AND EARTH DISTURBING ACTIVITIES WILL NOT RESUME UNTIL AFTER 14 CALENDAR DAYS. PERMANENT STABILIZATION WITH PERENNIAL VEGETATION OR OTHER PERMANENTLY STABLE NON-ERODING SURFACE SHALL REPLACE ANY TEMPORARY MEASURES AS SOON AS PRACTICABLE. UNPACKED GRAVEL CONTAINING FINES (SILT AND CLAY SIZED PARTICLES) OR CRUSHER-RUN WILL NOT BE CONSIDERED A NON-ERODIBLE SURFACE.

(7) STEEP SLOPES (A NATURAL OR CREATED SLOPE OF 35% GRADE (2.8H:1V) OR GREATER REGARDLESS OF HEIGHT) SHALL BE TEMPORARILY STABILIZED NO LATER THAN 7 CALENDAR DAYS AFTER CONSTRUCTION ACTIVITY ON THE SLOPE HAS TEMPORARILY OR PERMANENTLY CEASED.

(8) FOR STORMWATER DISCHARGES ASSOCIATED WITH CONSTRUCTION SUPPORT ACTIVITIES; TDOT PROJECTS ARE COVERED UNDER THE "WASTE AND BORROW" MANUAL PER THE SSWMP.

(9) EXCEPT AS OTHERWISE SPECIFIED, THERE ARE NO KNOWN SPECIAL ENVIRONMENTAL FACTORS PRESENT ON THIS PROJECT THAT INDICATE A NEED FOR SEASONAL LIMITATIONS ON THE CLEARING, GRUBBING, EXCAVATION, GRADING, CUTTING OR FILLING OPERATIONS OR ON THE TOTAL AREA OF EXPOSED SOIL.

**UNOFFICIAL SET**

**NOT FOR BIDDING**

SEALED BY

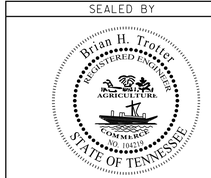


STATE OF TENNESSEE
DEPARTMENT OF TRANSPORTATION

EROSION PREVENTION AND SEDIMENT CONTROL NOTES

2/9/2015 1:08:35 PM
H:\lll6003\Dgn\012.sht

| TYPE | YEAR | PROJECT NO. | SHEET NO. |
|---|---|---|---|
| R.O.W. | 2014 | 25945-2477-04 | 12A |
| CONST. | 2015 | 25945-3477-04 | 12A |
| | | | |
| | | | |

## EROSION PREVENTION AND SEDIMENT CONTROL QUANTITIES

| ITEM NO. | DESCRIPTION | CLEARING & GRUBBING | CONSTRUCTION | FINAL STABILIZATION | TOTAL | UNIT |
|---|---|---|---|---|---|---|
| 203-01 | ROAD & DRAINAGE EXCAVATION (UNCLASSIFIED) | 14 | 14 | | 28 | C.Y. |
| | | | | | | |
| 209-05 | SEDIMENT REMOVAL | 9 | 12 | | 21 | C.Y. |
| | | | | | | |
| 209-01.31 | TEMPOARY MULCH FILTER BERM | 545 | 545 | | 1090 | C.Y. |
| 209-08.02 | TEMPORARY SILT FENCE (WITH BACKING) | 2210 | 2295 | | 4505 | L.F. |
| 209-08.03 | TEMPORARY SILT FENCE (WITHOUT BACKING) | 4237 | 4123 | | 8360 | L.F. |
| 209-08.07 | ROCK CHECK DAM PER | 21 | 52 | | 73 | EACH |
| 209-08.08 | ENHANCED ROCK CHECK DAM | 15 | 16 | | 31 | EACH |
| | | | | | | |
| 209-09.01 | SAND BAGS | 250 | 550 | | 800 | EACH |
| 209-09.03 | SEDIMENT FILTER BAG (15'X15') | | 3 | | 3 | EACH |
| 209-20.03 | POLYETHEYLENE SHEETING (6 MIL. MINIMUM) | | 300 | | 300 | S.Y. |
| | | | | | | |
| 209-65.03 | TEMPORARY DIVERSION CHANNEL | | 195 | | 195 | L.F. |
| | | | | | | |
| 303-10.01 | MINERAL AGGREGATE (SIZE 57) | 17 | 21 | | 38 | TON |
| | | | | | | |
| 607-41.03 | 18" SLOPE DRAIN PIPE | 200 | 100 | | 300 | L.F. |
| | | | | | | |
| 707-08.11 | HIGH-VISIBILITY CONSTRUCTION FENCE | 1925 | 1305 | | 3230 | L.F. |
| | | | | | | |
| 709-05.05 | MACHINED RIP-RAP (CLASS A-3) | 100 | 100 | | 200 | TON |
| 709-05.06 | MACHINED RIP-RAP (CLASS A-1) | 114 | 125 | | 239 | TON |
| 709-05.08 | MACHINED RIP-RAP (CLASS B) | | 1059 | | 1059 | TON |
| | | | | | | |
| 740-10.03 | GEOTEXTILE (TYPE III)(EROSION CONTROL) | 387 | 1081 | | 1468 | S.Y. |
| | | | | | | |
| 740-11.03 | TEMPORARY SEDIMENT TUBE 18IN (EROSION CONTROL) | 3113 | 3497 | 300 | 6910 | L.F. |
| | | | | | | |
| 801-01.07 | TEMPORARY SEEDING (WITH MULCH) | 200 | 150 | | 350 | UNIT |
| 801-03 | WATER (SEEDING AND SODDING) | 20.0 | 15.0 | 191.2 | 226.2 | M.G. |
| 803-01 | SODDING (NEW SOD) | | | 19123 | 19123 | S.Y. |
| | | | | | | |

NOTES: ALL QUANTITIES ARE TO BE USED AS DIRECTED BY THE ENGINEER.
TEMPORARY CONSTRUCTION EXIT LOCATION TO BE DETERMINED BY THE ENGINEER

## EROSION PREVENTION AND SEDIMENT CONTROL LEGEND

| SYMBOL | ITEM | STD. DWG. |
|---|---|---|
| * HVF * HVF | HIGH VISIBILITY FENCE | S-F-1 |
| SFB * * SFB * * SFB * * SFB | SEDIMENT FILTER BAG | EC-STR-2 |
| * SF * SF * SF * | SILT FENCE | EC-STR-3B |
| * SFB * SFB * SFB * | SILT FENCE WITH WIRE BACKING | EC-STR-3C |
| | ROCK CHECK DAM (V-DITCH) | EC-STR-6 |
| | ENHANCED ROCK CHECK DAM (V-DITCH) | EC-STR-6A |
| | CULVERT PROTECTION (TYPE 1) | EC-STR-11 |
| | CULVERT PROTECTION (TYPE 2) | EC-STR-11A |
| TCE | TEMPORARY CONSTRUCTION EXIT | EC-STR-25 |
| | TEMPORARY SLOPE DRAIN | EC-STR-27 |
| | TEMPORARY DIVERSION CHANNEL (DESCRIBE-SIZE AND TYPE OF LINING) | EC-STR-31 |
| MFB | MULCH FILTER BERM | EC-STR-35 |
| ** TUBE ** TUBE ** | SEDIMENT TUBE | EC-STR-37 |

| PHASE 1 -CLEARING & GRUBBING | | PHASE 2 - CONSTRUCTION | | PHASE 3 - FINAL STABILIZATION | |
|---|---|---|---|---|---|
| OUTFALL | AREA | OUTFALL | AREA | OUTFALL | AREA |
| OUT-1 | 0.18 AC | OUT-1 | 0.07 AC | OUT-1 | 0.07 AC |
| OUT-2 | 1.10 AC | OUT-2 | 1.73 AC | | |
| OUT-3 | 0.42 AC | OUT-3 | 1.61 AC | OUT-3 | 1.93 AC |
| OUT-4 | 0.30 AC | OUT-4 | 1.22 AC | OUT-4 | 4.18 AC |
| OUT-5 | 1.11 AC | OUT-5 | 1.11 AC | | |
| OUT-6 | 0.88 AC | OUT-6 | 2.63 AC | OUT-6 | 2.02 AC |
| OUT-7 | 0.54 AC | OUT-7 | 0.98 AC | OUT-7 | 0.98 AC |
| OUT-8 | 0.97 AC | OUT-8 | 1.03 AC | | |
| OUT-9 | 0.38 AC | OUT-9 | 0.38 AC | OUT-9 | 0.38 AC |
| OUT-10 | 0.68 AC | OUT-10 | 0.35 AC | OUT-10 | 0.52 AC |
| OUT-11 | 1.69 AC | OUT-11 | 1.69 AC | OUT-11 | 0.34 AC |
| OUT-12 | 3.92 AC | OUT-12 | 3.92 AC | | |
| OUT-13 | 0.33 AC | OUT-13 | 0.33 AC | OUT-13 | 1.04 AC |
| | | OUT-14 | 3.22 AC | OUT-14 | 3.22 AC |
| OUT-15 | 0.64 AC | OUT-15 | 0.64 AC | OUT-15 | 0.64 AC |
| | | | | | |

**UNOFFICIAL SET**

**NOT FOR BIDDING**

SEALED BY

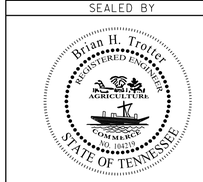


STATE OF TENNESSEE
DEPARTMENT OF TRANSPORTATION

EROSION PREVENTION AND SEDIMENT CONTROL NOTES

2/9/2015 1:10:09 PM
H:\Ill6003\Dgn\012a.sht

| TYPE | YEAR | PROJECT NO. | SHEET NO. |
|---|---|---|---|
| R.O.W. | 2014 | 25945-2477-04 | 12B |
| CONST. | 2015 | 25945-3477-04 | 12B |
| | | | |
| | | | |

REV 09-19-14: REVISED WETLAND IMPACT PATTERN WTL-3, REVISED WETLAND IMPACT AREAS WTL-2 & WTL-3, AMMENDED EPSC NOTES

NOTES:

EPSC DIVERSION MEASURES TO BE INSTALLED OUTSIDE LIMIT OF CONSTRUCTION IN WETLAND AREAS TO FACILITATE UNDERCUTTING OPERATIONS WHILE PREVENTING CROSS CONTAMINATION OF MATERIALS DURING CONSTRUCTION AND TO DIVERT OFFSITE DRAINAGE

THE CONTRACTOR SHALL ENSURE THAT NO CONSTRUCTION ACTIVITIES OR CONSTRUCTION EQUIPMENT ENTERS ANY WELTAND AREA OUTSIDE PROPOSED R.O.W., PERMANENT IMPACT AREAS AND CONSTRUCTION EASEMENTS AND THAT NO DISTURBANCE OCCURS OUTSIDE THOSE AREAS.

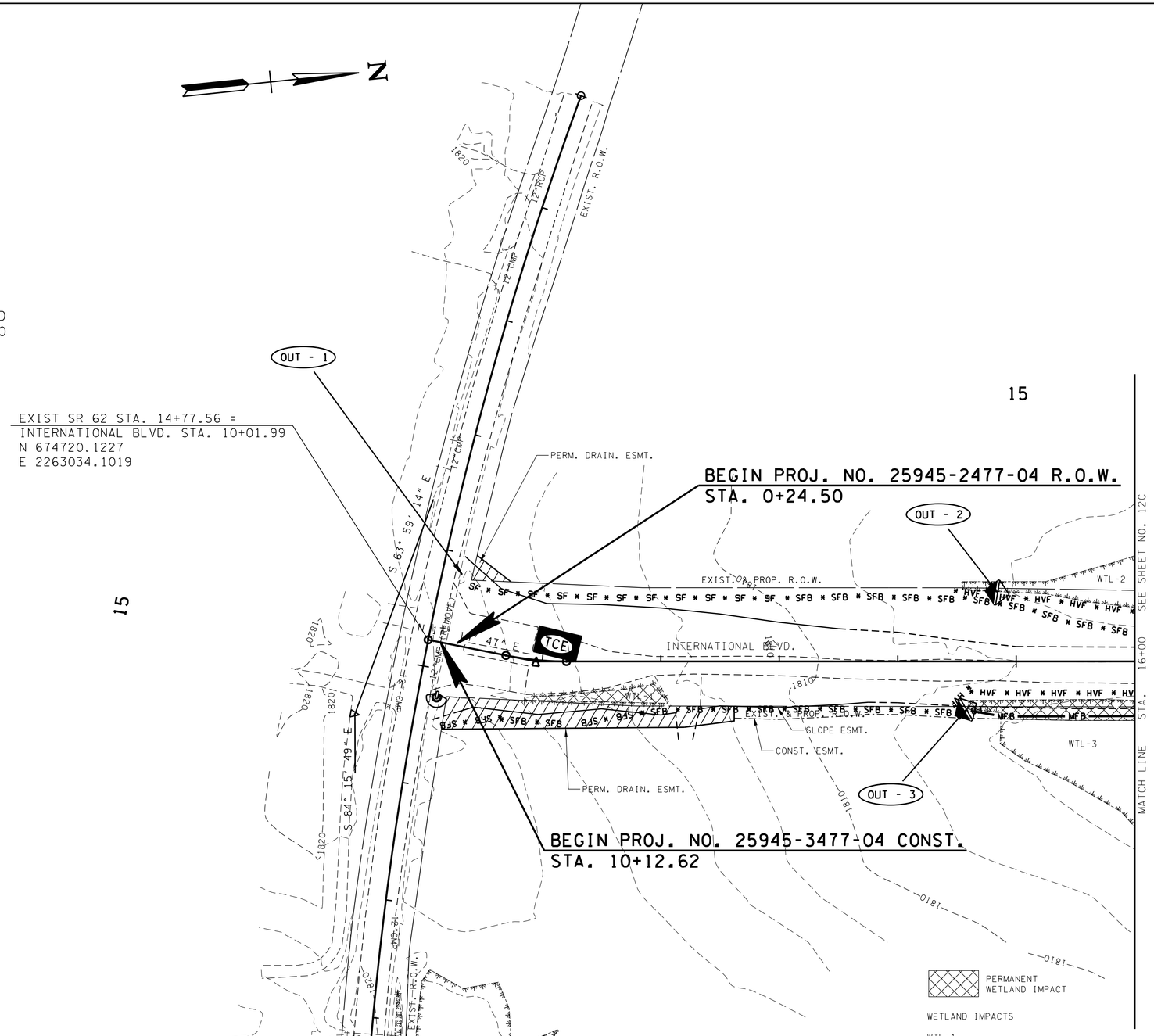


WETLAND IMPACTS

WTL-1
AREA OF WETLAND = 0.022 AC
AREA OF PERMANENT WETLAND IMPACT = 0.022 AC
AREA OF TEMPORARY WETLAND IMPACT = 0

WTL-2
AREA OF WETLAND = 0.517 AC
AREA OF PERMANENT WETLAND IMPACT = 0.035 AC
AREA OF TEMPORARY WETLAND IMPACT = 0

WTL-3
AREA OF WETLAND = 1.476 AC
AREA OF PERMANENT WETLAND IMPACT = 0.196 AC
AREA OF TEMPORARY WETLAND IMPACT = 0

PHASE 1- CLEARING & GRUBBING

**UNOFFICIAL SET**

**NOT FOR BIDDING**

SEALED BY

Brian H. Trotter
REGISTERED ENGINEER
No. 104319
STATE OF TENNESSEE

COORDINATES ARE NAD/83(1995), ARE DATUM ADJUSTED BY THE FACTOR OF 1.000120 AND TIED TO THE TGRN. ALL ELEVATIONS ARE REFERENCED TO THE NAVD 1988.

STATE OF TENNESSEE
DEPARTMENT OF TRANSPORTATION

# EROSION PREVENTION AND SEDIMENT CONTROL PLAN

BEGIN PROJ. TO STA. 16+00

SCALE: 1"= 50'

2/9/2015 1:10:58 PM
H:\Ill6003\Dgn\012B.sht

| TYPE | YEAR | PROJECT NO. | SHEET NO. |
|---|---|---|---|
| R.O.W. | 2014 | 25945-2477-04 | 12C |
| CONST. | 2015 | 25945-3477-04 | 12C |
| | | | |
| | | | |

REV 09-19-14: REVISED WETLAND IMPACT PATTERN AND WETLAND IMPACT AREAS WTL-2 & WTL-3, REVISED NOTES

NOTES:

EPSC DIVERSION MEASURES TO BE INSTALLED OUTSIDE LIMIT OF CONSTRUCTION IN WETLAND AREAS TO FACILITATE UNDERCUTTING OPERATIONS WHILE PREVENTING CROSS CONTAMINATION OF MATERIALS DURING CONSTRUCTION AND TO DIVERT OFFSITE DRAINAGE

THE CONTRACTOR SHALL ENSURE THAT NO CONSTRUCTION ACTIVITIES OR CONSTRUCTION EQUIPMENT ENTERS ANY WELTAND AREA OUTSIDE PROPOSED R.O.W., PERMANENT IMPACT AREAS AND CONSTRUCTION EASEMENTS AND THAT NO DISTURBANCE OCCURS OUTSIDE THOSE AREAS.

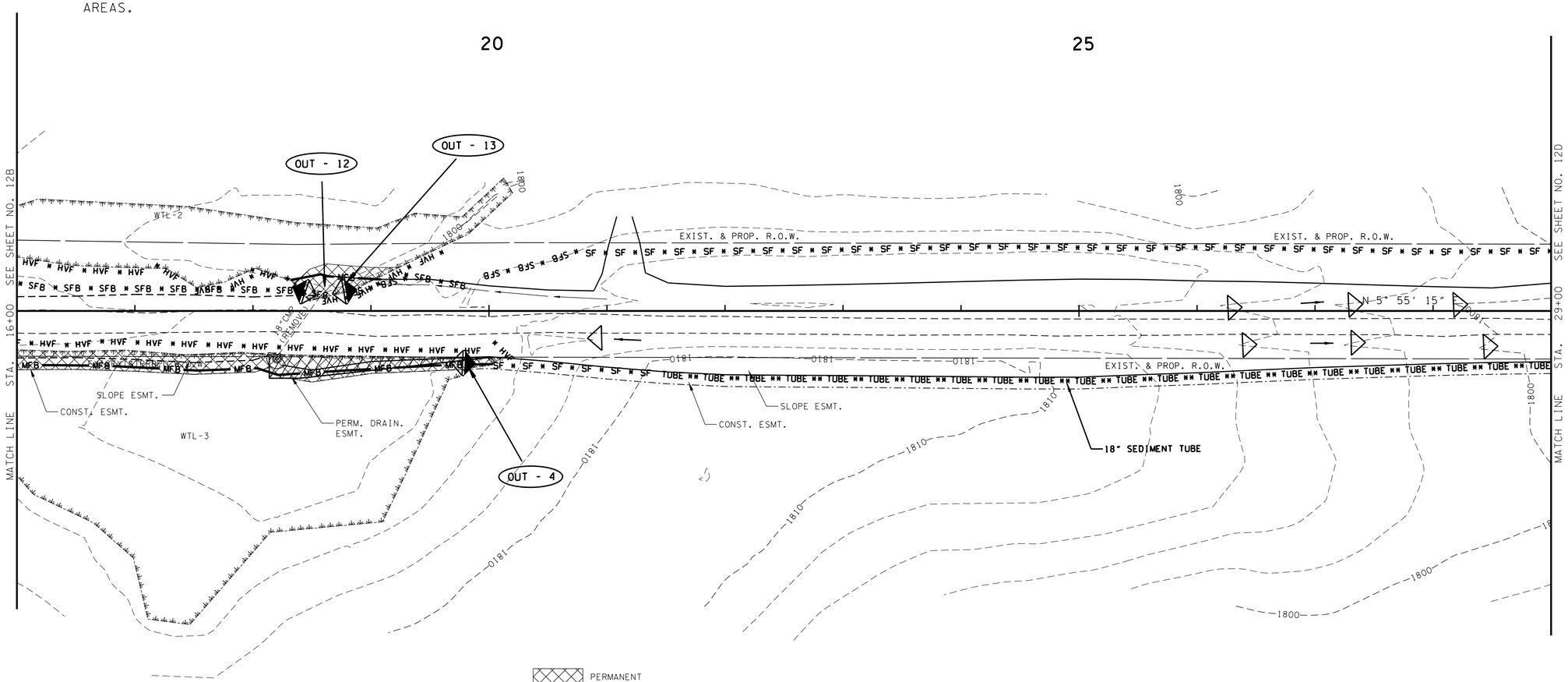


PERMANENT WETLAND IMPACT

WETLAND IMPACTS

WTL-2
AREA OF WETLAND = 0.517 AC
AREA OF PERMANENT WETLAND IMPACT = 0.035 AC
AREA OF TEMPORARY WETLAND IMPACT = 0

WTL-3
AREA OF WETLAND = 1.476 AC
AREA OF PERMANENT WETLAND IMPACT = 0.196 AC
AREA OF TEMPORARY WETLAND IMPACT = 0

PHASE 1- CLEARING & GRUBBING

**UNOFFICIAL SET**

**NOT FOR BIDDING**

SEALED BY

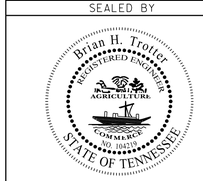


COORDINATES ARE NAD/83(1995), ARE DATUM ADJUSTED BY THE FACTOR OF 1.000120 AND TIED TO THE TGRN. ALL ELEVATIONS ARE REFERENCED TO THE NAVD 1988.

STATE OF TENNESSEE
DEPARTMENT OF TRANSPORTATION

EROSION PREVENTION AND SEDIMENT CONTROL PLAN

STA. 16+00 TO STA. 29+00

SCALE: 1"= 50'

2/9/2015 1:10:58 PM
H:\116003\Dgn\012C.sht

| TYPE | YEAR | PROJECT NO. | SHEET NO. |
|---|---|---|---|
| R.O.W. | 2014 | 25945-2477-04 | 12D |
| CONST. | 2015 | 25945-3477-04 | 12D |
| | | | |
| | | | |

REV 09-19-14: REVISED IMPACT AREAS WTL-4, REVISED NOTES

REV 12-05-14: REVISED AREA & IMPACT AREA WTL-4

NOTES:

EPSC DIVERSION MEASURES TO BE INSTALLED OUTSIDE LIMIT OF CONSTRUCTION IN WETLAND AREAS TO FACILITATE UNDERCUTTING OPERATIONS WHILE PREVENTING CROSS CONTAMINATION OF MATERIALS DURING CONSTRUCTION AND TO DIVERT OFFSITE DRAINAGE

THE CONTRACTOR SHALL ENSURE THAT NO CONSTRUCTION ACTIVITIES OR CONSTRUCTION EQUIPMENT ENTERS ANY WELTAND AREA OUTSIDE PROPOSED R.O.W., PERMANENT IMPACT AREAS AND CONSTRUCTION EASEMENTS AND THAT NO DISTURBANCE OCCURS OUTSIDE THOSE AREAS.

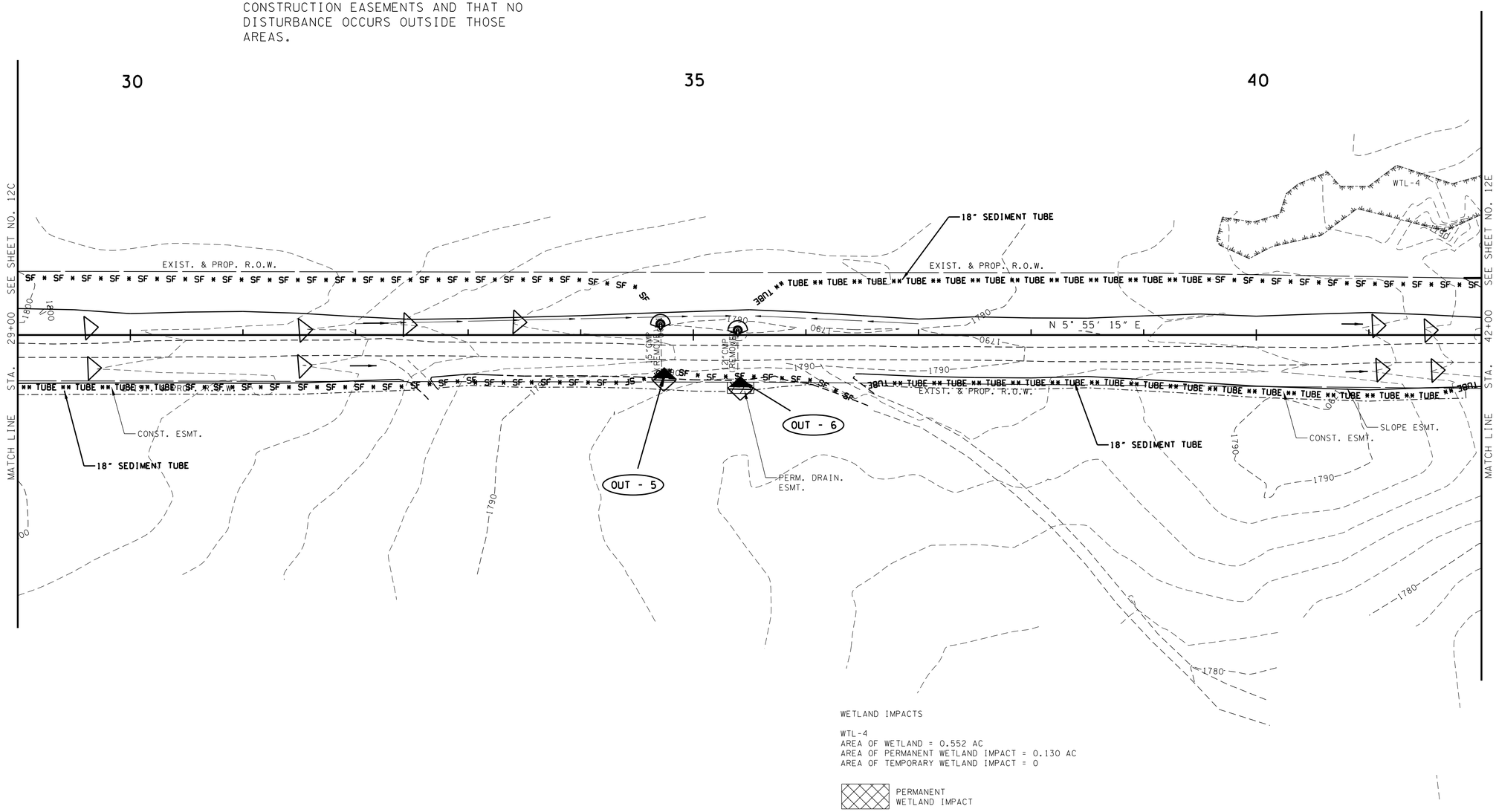


WETLAND IMPACTS

WTL-4
AREA OF WETLAND = 0.552 AC
AREA OF PERMANENT WETLAND IMPACT = 0.130 AC
AREA OF TEMPORARY WETLAND IMPACT = 0

PERMANENT WETLAND IMPACT

PHASE 1- CLEARING & GRUBBING

**UNOFFICIAL SET**

**NOT FOR BIDDING**

SEALED BY

Brian H. Trotter
REGISTERED ENGINEER
AGRICULTURE
COMMERCE
STATE OF TENNESSEE

COORDINATES ARE NAD/83(1995), ARE DATUM ADJUSTED BY THE FACTOR OF 1.000120 AND TIED TO THE TGRN. ALL ELEVATIONS ARE REFERENCED TO THE NAVD 1988.

STATE OF TENNESSEE
DEPARTMENT OF TRANSPORTATION

# EROSION PREVENTION AND SEDIMENT CONTROL PLAN

STA. 29+00 TO STA. 42+00

SCALE: 1"= 50'

2/9/2015 1:10:58 PM
H:\116003\Dgn\0120.sht

| TYPE | YEAR | PROJECT NO. | SHEET NO. |
|---|---|---|---|
| R.O.W. | 2014 | 25945-2477-04 | 12E |
| CONST. | 2015 | 25945-3477-04 | 12E |
| | | | |
| | | | |

REV 09-19-14: REVISED IMPACT AREA AND PATTERNING WTL-4; REVISED NOTES

REV 12-05-14: REVISED AREA & IMPACT AREA WTL-4, REVISED EPSC MEASURES AT WTL-4 RT.

NOTES:

EPSC DIVERSION MEASURES TO BE INSTALLED OUTSIDE LIMIT OF CONSTRUCTION IN WETLAND AREAS TO FACILITATE UNDERCUTTING OPERATIONS WHILE PREVENTING CROSS CONTAMINATION OF MATERIALS DURING CONSTRUCTION AND TO DIVERT OFFSITE DRAINAGE

THE CONTRACTOR SHALL ENSURE THAT NO CONSTRUCTION ACTIVITIES OR CONSTRUCTION EQUIPMENT ENTERS ANY WELTAND AREA OUTSIDE PROPOSED R.O.W., PERMANENT IMPACT AREAS AND CONSTRUCTION EASEMENTS AND THAT NO DISTURBANCE OCCURS OUTSIDE THOSE AREAS.

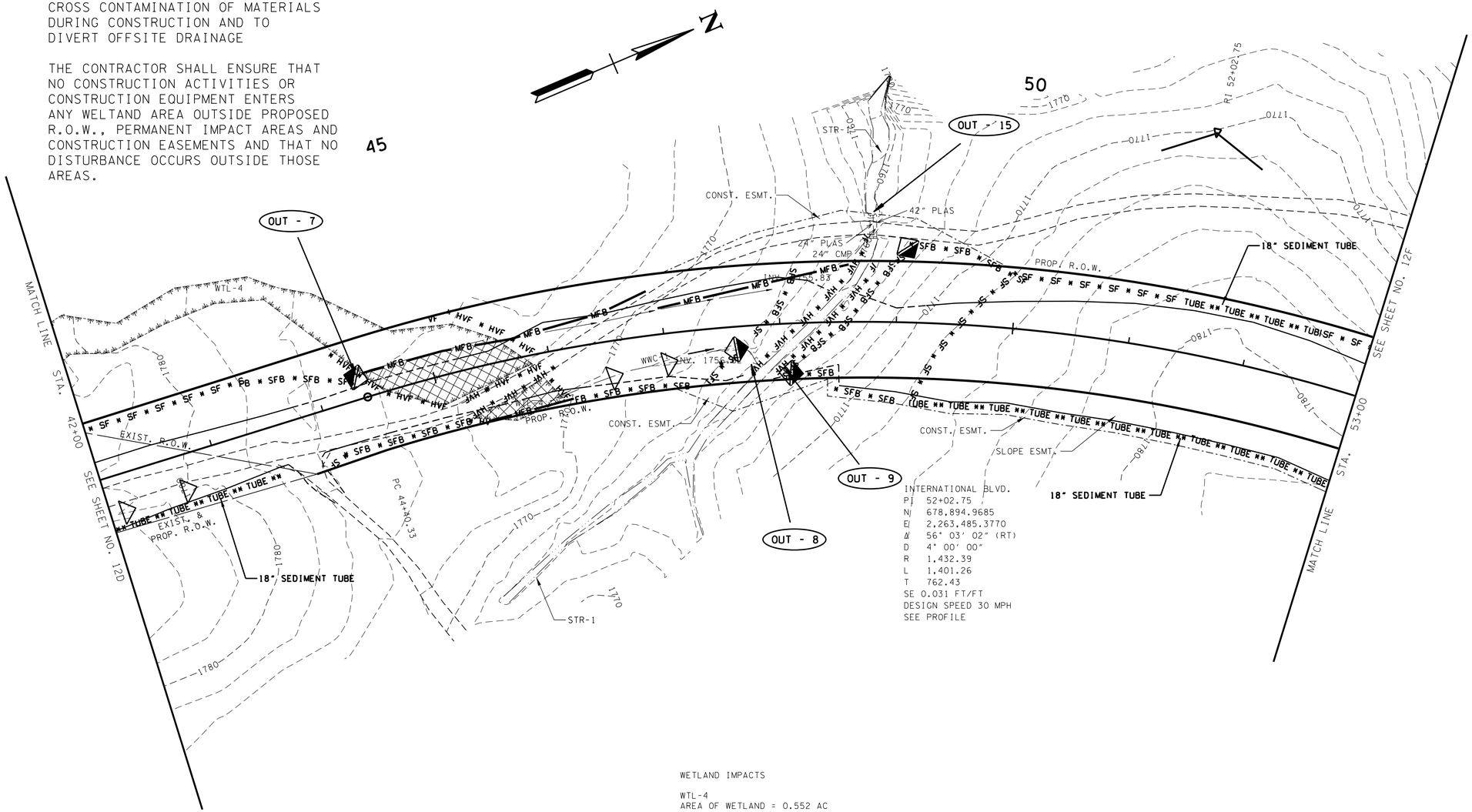


WETLAND IMPACTS

WTL-4
AREA OF WETLAND = 0.552 AC
AREA OF PERMANENT WETLAND IMPACT = 0.130 AC
AREA OF TEMPORARY WETLAND IMPACT = 0

PERMANENT WETLAND IMPACT

PHASE 1- CLEARING & GRUBBING

**UNOFFICIAL SET**

**NOT FOR BIDDING**

SEALED BY

Brian H. Trotter
REGISTERED ENGINEER
AGRICULTURE
COMMERCE
NO. 104519
STATE OF TENNESSEE

COORDINATES ARE NAD/83(1995), ARE DATUM ADJUSTED BY THE FACTOR OF 1.000120 AND TIED TO THE TGRN. ALL ELEVATIONS ARE REFERENCED TO THE NAVD 1988.

STATE OF TENNESSEE
DEPARTMENT OF TRANSPORTATION

# EROSION PREVENTION AND SEDIMENT CONTROL PLAN

STA. 42+00 TO STA. 53+00

SCALE: 1"= 50'

2/9/2015 1:10:59 PM
H:\116003\Dgn\012E.sht

| TYPE | YEAR | PROJECT NO. | SHEET NO. |
|---|---|---|---|
| R.O.W. | 2014 | 25945-2477-04 | 12F |
| CONST. | 2015 | 25945-3477-04 | 12F |
| | | | |
| | | | |

REV 09-19-14: REVISED IMPACT LEGEND

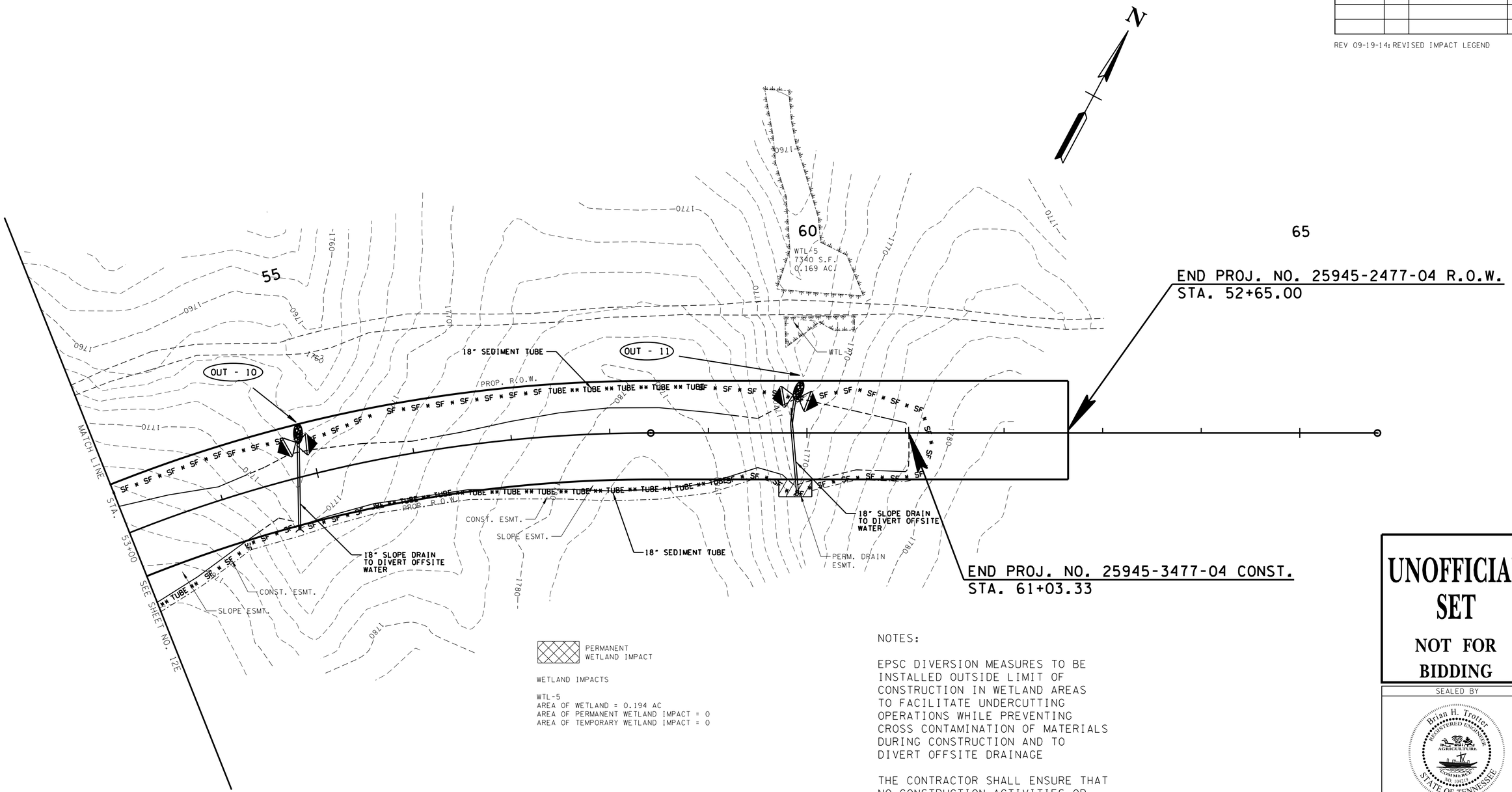


PERMANENT WETLAND IMPACT

WETLAND IMPACTS

WTL-5
AREA OF WETLAND = 0.194 AC
AREA OF PERMANENT WETLAND IMPACT = 0
AREA OF TEMPORARY WETLAND IMPACT = 0

NOTES:

EPSC DIVERSION MEASURES TO BE INSTALLED OUTSIDE LIMIT OF CONSTRUCTION IN WETLAND AREAS TO FACILITATE UNDERCUTTING OPERATIONS WHILE PREVENTING CROSS CONTAMINATION OF MATERIALS DURING CONSTRUCTION AND TO DIVERT OFFSITE DRAINAGE

THE CONTRACTOR SHALL ENSURE THAT NO CONSTRUCTION ACTIVITIES OR CONSTRUCTION EQUIPMENT ENTERS ANY WELTAND AREA OUTSIDE PROPOSED R.O.W., PERMANENT IMPACT AREAS AND CONSTRUCTION EASEMENTS AND THAT NO DISTURBANCE OCCURS OUTSIDE THOSE AREAS.

PHASE 1- CLEARING & GRUBBING

**UNOFFICIAL SET**

**NOT FOR BIDDING**

SEALED BY

Brian H. Trotter
REGISTERED ENGINEER
AGRICULTURE
COMMERCE
NO. 104319
STATE OF TENNESSEE

COORDINATES ARE NAD/83(1995), ARE DATUM ADJUSTED BY THE FACTOR OF 1.000120 AND TIED TO THE TGRN. ALL ELEVATIONS ARE REFERENCED TO THE NAVD 1988.

STATE OF TENNESSEE
DEPARTMENT OF TRANSPORTATION

# EROSION PREVENTION AND SEDIMENT CONTROL PLAN

STA. 53+00 TO END PROJ.

SCALE: 1"= 50'

2/9/2015 1:10:59 PM
H:\116003\Dgn\012F.sht

| TYPE | YEAR | PROJECT NO. | SHEET NO. |
|---|---|---|---|
| R.O.W. | 2014 | 25945-2477-04 | 12G |
| CONST. | 2015 | 25945-3477-04 | 12G |
| | | | |
| | | | |

REV 09-19-14: REVISED WETLAND IMPACT PATTERN WTL-3, REVISED WETLAND IMPACT AREAS WTL-2 & WTL-3, AMMENDED EPSC NOTES

NOTES:

EPSC DIVERSION MEASURES TO BE INSTALLED OUTSIDE LIMIT OF CONSTRUCTION IN WETLAND AREAS TO FACILITATE UNDERCUTTING OPERATIONS WHILE PREVENTING CROSS CONTAMINATION OF MATERIALS DURING CONSTRUCTION AND TO DIVERT OFFSITE DRAINAGE

THE CONTRACTOR SHALL ENSURE THAT NO CONSTRUCTION ACTIVITIES OR CONSTRUCTION EQUIPMENT ENTERS ANY WELTAND AREA OUTSIDE PROPOSED R.O.W., PERMANENT IMPACT AREAS AND CONSTRUCTION EASEMENTS AND THAT NO DISTURBANCE OCCURS OUTSIDE THOSE AREAS.

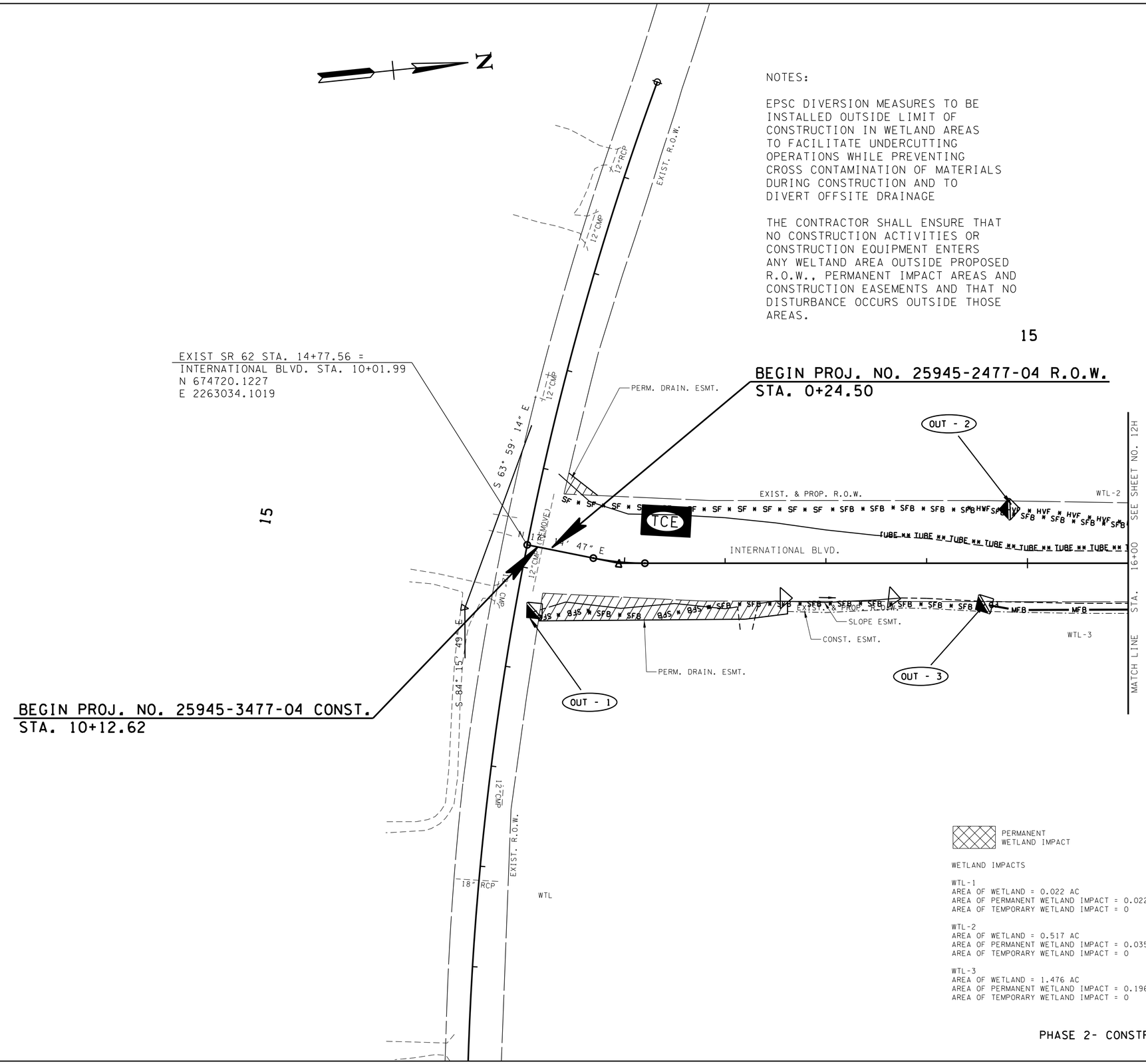


PERMANENT WETLAND IMPACT

WETLAND IMPACTS

WTL-1
AREA OF WETLAND = 0.022 AC
AREA OF PERMANENT WETLAND IMPACT = 0.022 AC
AREA OF TEMPORARY WETLAND IMPACT = 0

WTL-2
AREA OF WETLAND = 0.517 AC
AREA OF PERMANENT WETLAND IMPACT = 0.035 AC
AREA OF TEMPORARY WETLAND IMPACT = 0

WTL-3
AREA OF WETLAND = 1.476 AC
AREA OF PERMANENT WETLAND IMPACT = 0.196 AC
AREA OF TEMPORARY WETLAND IMPACT = 0

PHASE 2- CONSTRUCTION

**UNOFFICIAL SET**

**NOT FOR BIDDING**

SEALED BY

Brian H. Trotter
REGISTERED ENGINEER
AGRICULTURE
COMMERCE
NO. 108434
STATE OF TENNESSEE

COORDINATES ARE NAD/83(1995), ARE DATUM ADJUSTED BY THE FACTOR OF 1.000120 AND TIED TO THE TGRN. ALL ELEVATIONS ARE REFERENCED TO THE NAVD 1988.

STATE OF TENNESSEE
DEPARTMENT OF TRANSPORTATION

# EROSION PREVENTION AND SEDIMENT CONTROL PLAN

BEGIN PROJ. TO STA. 16+00

SCALE: 1"= 50'

2/9/2015 1:11:00 PM
H:\116003\Dgn\012G.sht

| TYPE | YEAR | PROJECT NO. | SHEET NO. |
|---|---|---|---|
| R.O.W. | 2014 | 25945-2477-04 | 12H |
| CONST. | 2015 | 25945-3477-04 | 12H |
| | | | |
| | | | |

REV 09-19-14: REVISED WETLAND IMPACT PATTERN AND WETLAND IMPACT AREAS WTL-2 & WTL-3, REVISED NOTES

NOTES:

EPSC DIVERSION MEASURES TO BE INSTALLED OUTSIDE LIMIT OF CONSTRUCTION IN WETLAND AREAS TO FACILITATE UNDERCUTTING OPERATIONS WHILE PREVENTING CROSS CONTAMINATION OF MATERIALS DURING CONSTRUCTION AND TO DIVERT OFFSITE DRAINAGE

THE CONTRACTOR SHALL ENSURE THAT NO CONSTRUCTION ACTIVITIES OR CONSTRUCTION EQUIPMENT ENTERS ANY WELTAND AREA OUTSIDE PROPOSED R.O.W., PERMANENT IMPACT AREAS AND CONSTRUCTION EASEMENTS AND THAT NO DISTURBANCE OCCURS OUTSIDE THOSE AREAS.

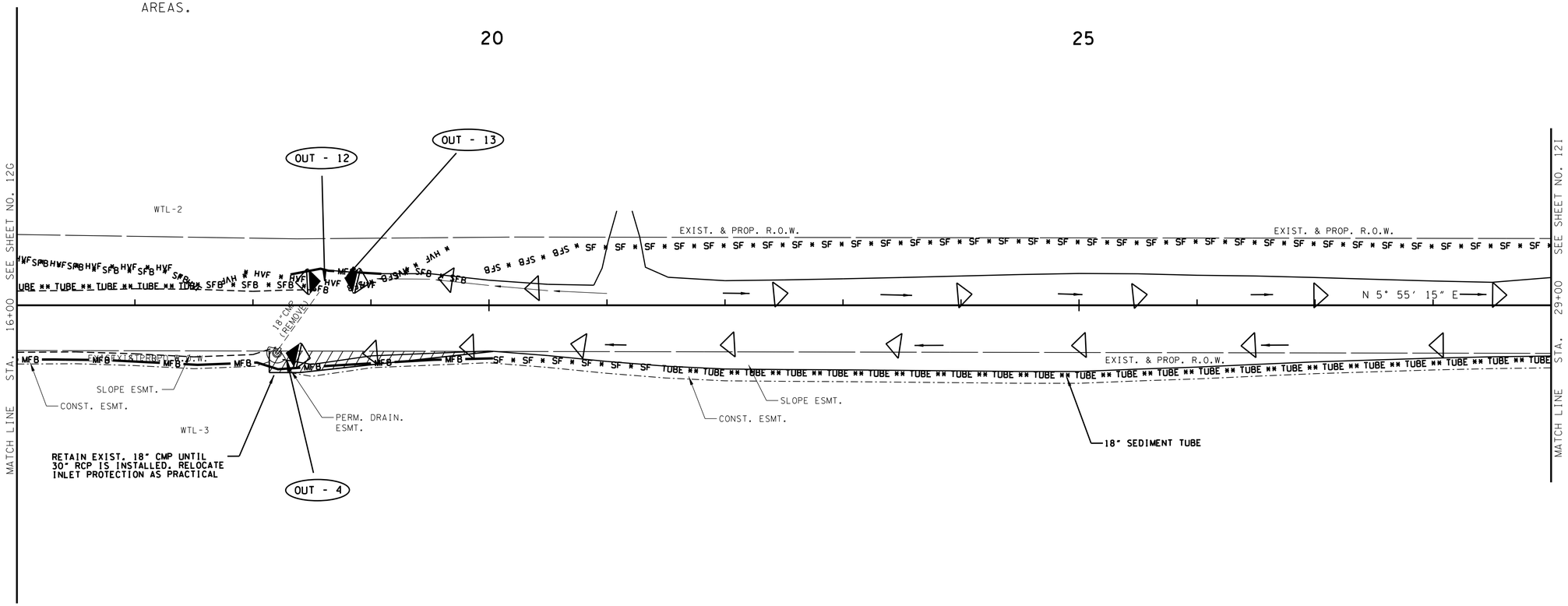


PERMANENT WETLAND IMPACT

WETLAND IMPACTS

WTL-2
AREA OF WETLAND = 0.517 AC
AREA OF PERMANENT WETLAND IMPACT = 0.035 AC
AREA OF TEMPORARY WETLAND IMPACT = 0

WTL-3
AREA OF WETLAND = 1.476 AC
AREA OF PERMANENT WETLAND IMPACT = 0.196 AC
AREA OF TEMPORARY WETLAND IMPACT = 0

PHASE 2- CONSTRUCTION

**UNOFFICIAL SET**

**NOT FOR BIDDING**

SEALED BY

Brian H. Trotter
REGISTERED ENGINEER
No. 110870
STATE OF TENNESSEE

COORDINATES ARE NAD/83(1995), ARE DATUM ADJUSTED BY THE FACTOR OF 1.000120 AND TIED TO THE TGRN. ALL ELEVATIONS ARE REFERENCED TO THE NAVD 1988.

STATE OF TENNESSEE
DEPARTMENT OF TRANSPORTATION

EROSION PREVENTION AND SEDIMENT CONTROL PLAN

STA. 16+00 TO STA. 29+00

SCALE: 1"= 50'

2/9/2015 1:11:00 PM
H:\116003\Dgn\012H.sht

| TYPE | YEAR | PROJECT NO. | SHEET NO. |
|---|---|---|---|
| R.O.W. | 2014 | 25945-2477-04 | 12I |
| CONST. | 2015 | 25945-3477-04 | 12I |
| | | | |
| | | | |

REV 09-19-14: REVISED IMPACT AREAS WTL-4, REVISED NOTES

REV 12-05-14: REVISED AREA & IMPACT AREA WTL-4

NOTES:

EPSC DIVERSION MEASURES TO BE INSTALLED OUTSIDE LIMIT OF CONSTRUCTION IN WETLAND AREAS TO FACILITATE UNDERCUTTING OPERATIONS WHILE PREVENTING CROSS CONTAMINATION OF MATERIALS DURING CONSTRUCTION AND TO DIVERT OFFSITE DRAINAGE

THE CONTRACTOR SHALL ENSURE THAT NO CONSTRUCTION ACTIVITIES OR CONSTRUCTION EQUIPMENT ENTERS ANY WELTAND AREA OUTSIDE PROPOSED R.O.W., PERMANENT IMPACT AREAS AND CONSTRUCTION EASEMENTS AND THAT NO DISTURBANCE OCCURS OUTSIDE THOSE AREAS.

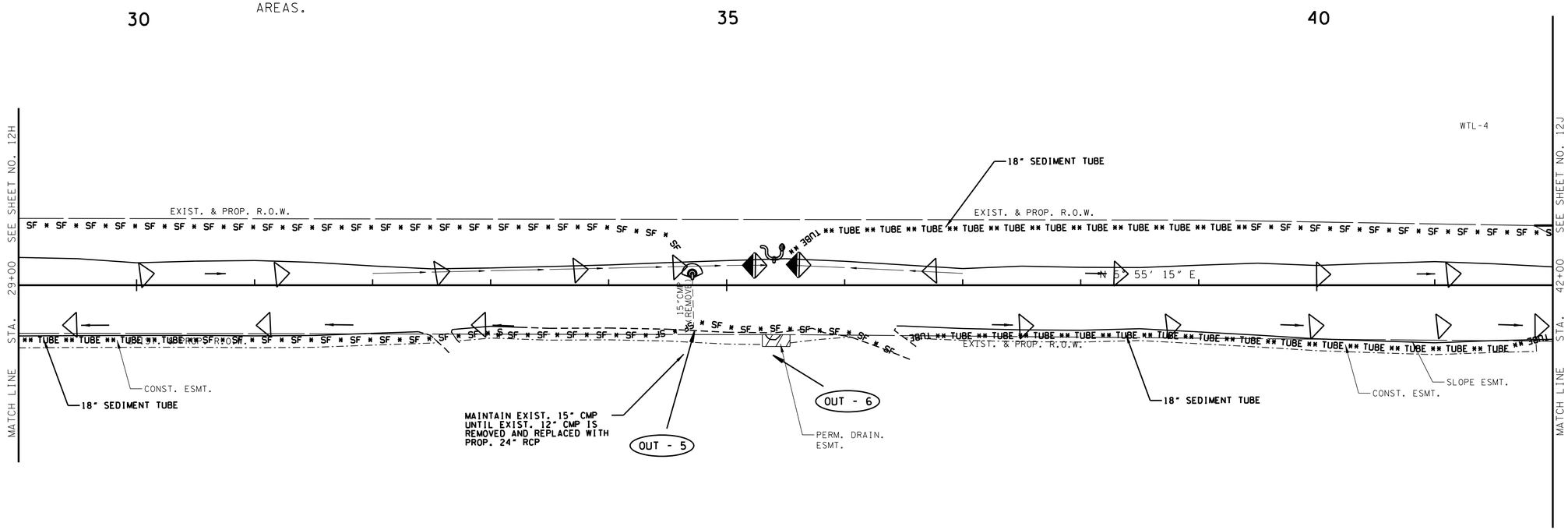


WETLAND IMPACTS

WTL-4
AREA OF WETLAND = 0.552 AC
AREA OF PERMANENT WETLAND IMPACT = 0.130 AC
AREA OF TEMPORARY WETLAND IMPACT = 0

PERMANENT WETLAND IMPACT

PHASE 2- CONSTRUCTION

**UNOFFICIAL SET**

**NOT FOR BIDDING**

SEALED BY

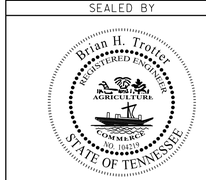


COORDINATES ARE NAD/83(1995), ARE DATUM ADJUSTED BY THE FACTOR OF 1.000120 AND TIED TO THE TGRN. ALL ELEVATIONS ARE REFERENCED TO THE NAVD 1988.

STATE OF TENNESSEE
DEPARTMENT OF TRANSPORTATION

EROSION PREVENTION AND SEDIMENT CONTROL PLAN

STA. 29+00 TO STA. 42+00

SCALE: 1"= 50'

2/9/2015 1:11:00 PM
H:\116003\Dgn\012I.sht

| TYPE | YEAR | PROJECT NO. | SHEET NO. |
|---|---|---|---|
| R.O.W. | 2014 | 25945-2477-04 | 12J |
| CONST. | 2015 | 25945-3477-04 | 12J |
| | | | |
| | | | |

REV 09-19-14: REVISED IMPACT AREA AND PATTERNING WTL-4; REVISED NOTES

REV 12-05-14: REVISED AREA & IMPACT AREA WTL-4, REVISE EPSC MEASURES AT WTL-4 RT.

NOTES:

EPSC DIVERSION MEASURES TO BE INSTALLED OUTSIDE LIMIT OF CONSTRUCTION IN WETLAND AREAS TO FACILITATE UNDERCUTTING OPERATIONS WHILE PREVENTING CROSS CONTAMINATION OF MATERIALS DURING CONSTRUCTION AND TO DIVERT OFFSITE DRAINAGE

THE CONTRACTOR SHALL ENSURE THAT NO CONSTRUCTION ACTIVITIES OR CONSTRUCTION EQUIPMENT ENTERS ANY WELTAND AREA OUTSIDE PROPOSED R.O.W., PERMANENT IMPACT AREAS AND CONSTRUCTION EASEMENTS AND THAT NO DISTURBANCE OCCURS OUTSIDE THOSE AREAS.

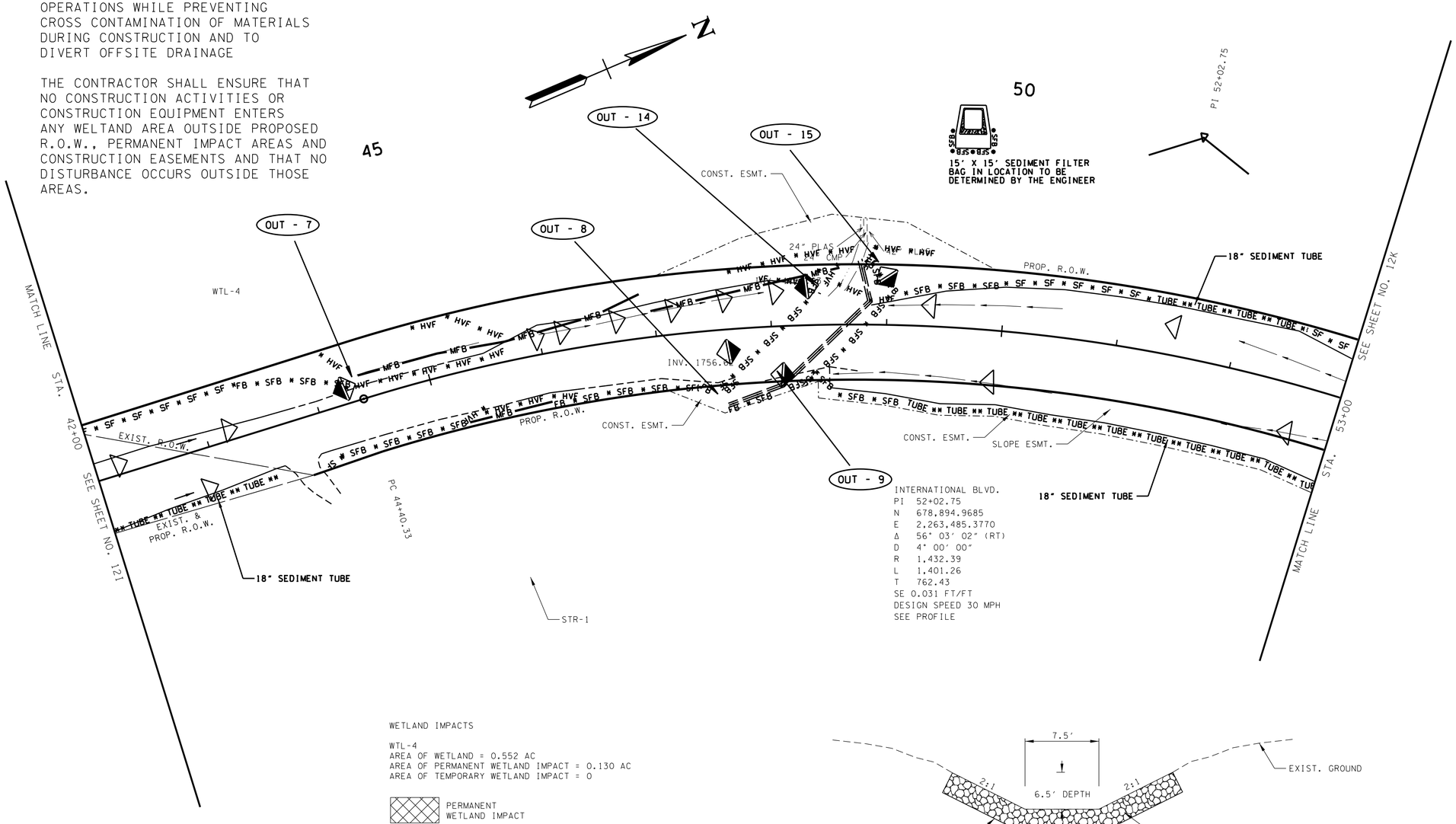


WETLAND IMPACTS

WTL-4
AREA OF WETLAND = 0.552 AC
AREA OF PERMANENT WETLAND IMPACT = 0.130 AC
AREA OF TEMPORARY WETLAND IMPACT = 0

PERMANENT WETLAND IMPACT

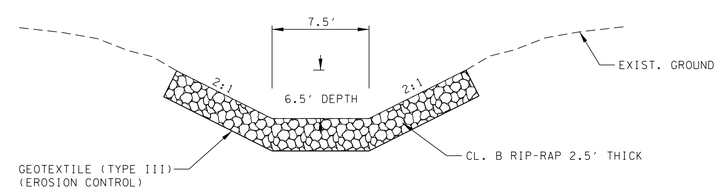


TEMPORARY DIVERSION CHANNEL

PHASE 2- CONSTRUCTION

UNOFFICIAL SET

NOT FOR BIDDING

SEALED BY

Brian H. Trotter REGISTERED ENGINEER AGRICULTURE COMMERCE NO. 104219 STATE OF TENNESSEE

COORDINATES ARE NAD/83(1995), ARE DATUM ADJUSTED BY THE FACTOR OF 1.000120 AND TIED TO THE TGRN. ALL ELEVATIONS ARE REFERENCED TO THE NAVD 1988.

STATE OF TENNESSEE
DEPARTMENT OF TRANSPORTATION

EROSION PREVENTION AND SEDIMENT CONTROL PLAN

STA. 42+00 TO STA. 53+00

SCALE: 1"= 50'

2/9/2015 1:15:01 PM
H:\116003\Dgn\012J.sht

| TYPE | YEAR | PROJECT NO. | SHEET NO. |
|---|---|---|---|
| R.O.W. | 2014 | 25945-2477-04 | 12K |
| CONST. | 2015 | 25945-3477-04 | 12K |
| | | | |
| | | | |

REV 09-19-14: REVISED IMPACT LEGEND

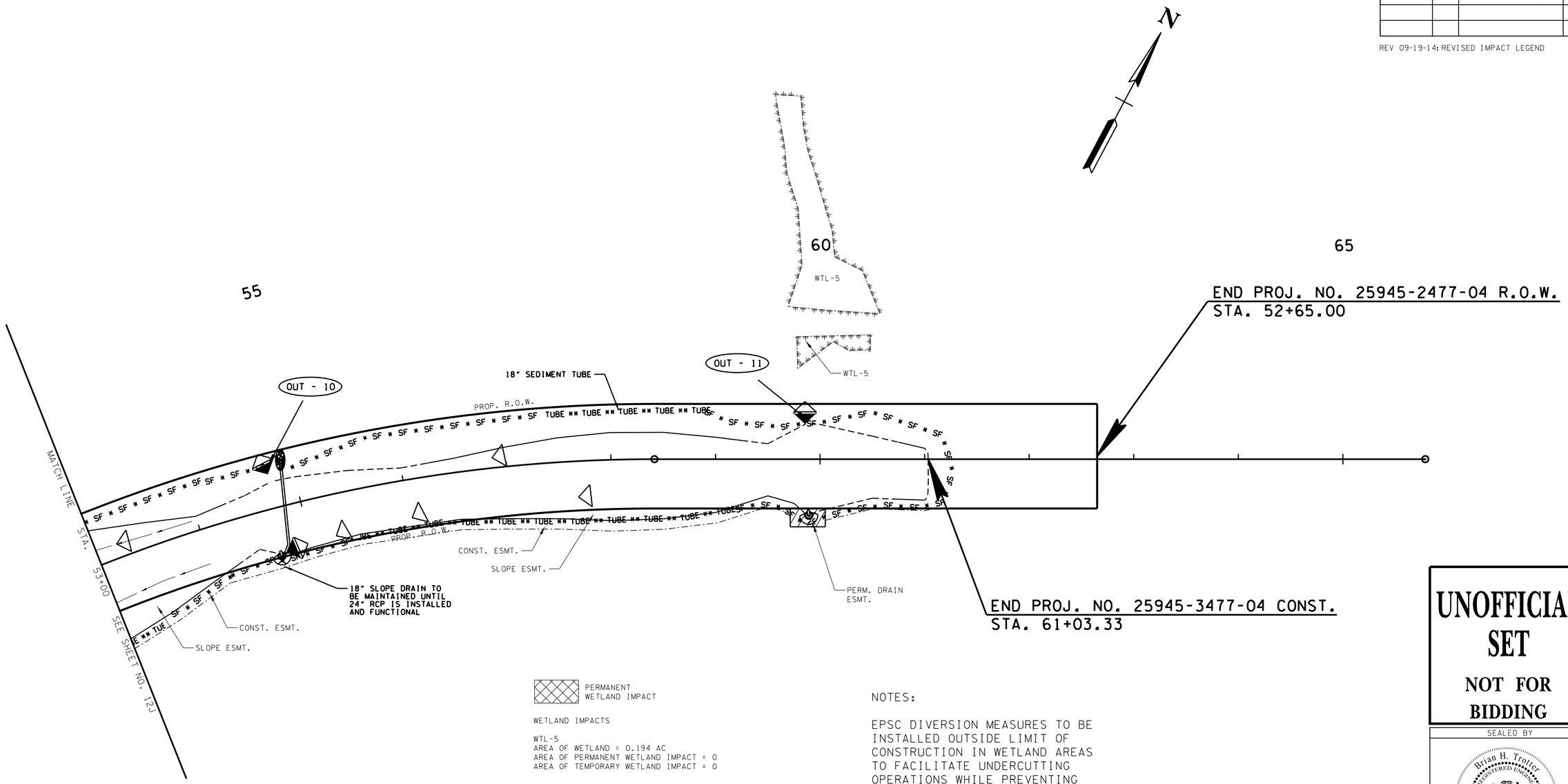


PERMANENT WETLAND IMPACT

WETLAND IMPACTS

WTL-5
AREA OF WETLAND = 0.194 AC
AREA OF PERMANENT WETLAND IMPACT = 0
AREA OF TEMPORARY WETLAND IMPACT = 0

NOTES:

EPSC DIVERSION MEASURES TO BE INSTALLED OUTSIDE LIMIT OF CONSTRUCTION IN WETLAND AREAS TO FACILITATE UNDERCUTTING OPERATIONS WHILE PREVENTING CROSS CONTAMINATION OF MATERIALS DURING CONSTRUCTION AND TO DIVERT OFFSITE DRAINAGE

THE CONTRACTOR SHALL ENSURE THAT NO CONSTRUCTION ACTIVITIES OR CONSTRUCTION EQUIPMENT ENTERS ANY WELTAND AREA OUTSIDE PROPOSED R.O.W., PERMANENT IMPACT AREAS AND CONSTRUCTION EASEMENTS AND THAT NO DISTURBANCE OCCURS OUTSIDE THOSE AREAS.

PHASE 2- CONSTRUCTION

**UNOFFICIAL SET**

**NOT FOR BIDDING**

SEALED BY

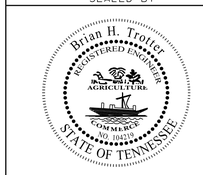


COORDINATES ARE NAD/83(1995), ARE DATUM ADJUSTED BY THE FACTOR OF 1.000120 AND TIED TO THE TGRN. ALL ELEVATIONS ARE REFERENCED TO THE NAVD 1988.

STATE OF TENNESSEE
DEPARTMENT OF TRANSPORTATION

# EROSION PREVENTION AND SEDIMENT CONTROL PLAN

STA. 53+00 TO END PROJ.

SCALE: 1"= 50'

2/9/2015 1:11:01 PM
H:\lll6003\Dgn\012K.sht

| TYPE | YEAR | PROJECT NO. | SHEET NO. |
|---|---|---|---|
| R.O.W. | 2014 | 25945-2477-04 | 12L |
| CONST. | 2015 | 25945-3477-04 | 12L |
| | | | |
| | | | |

REV 09-19-14: REVISED REMAINDER WTL-3

EXIST. SR 62
PI 15+55.74
N 674,652.1024
E 2,263,089.9903
Δ 20° 16' 35" (LT)
D 1° 50' 37"
R 3,107.93
L 1,099.86
T 555.74

NOTE:

EPSC MEASURES TO REMAIN FROM PREVIOUS PHASE UNTIL SUCH TIME AS FINAL STABILIZATION HAS BEEN ESTABLISHED AND THE MEAUSRE IS NO LONGER PRACTICAL

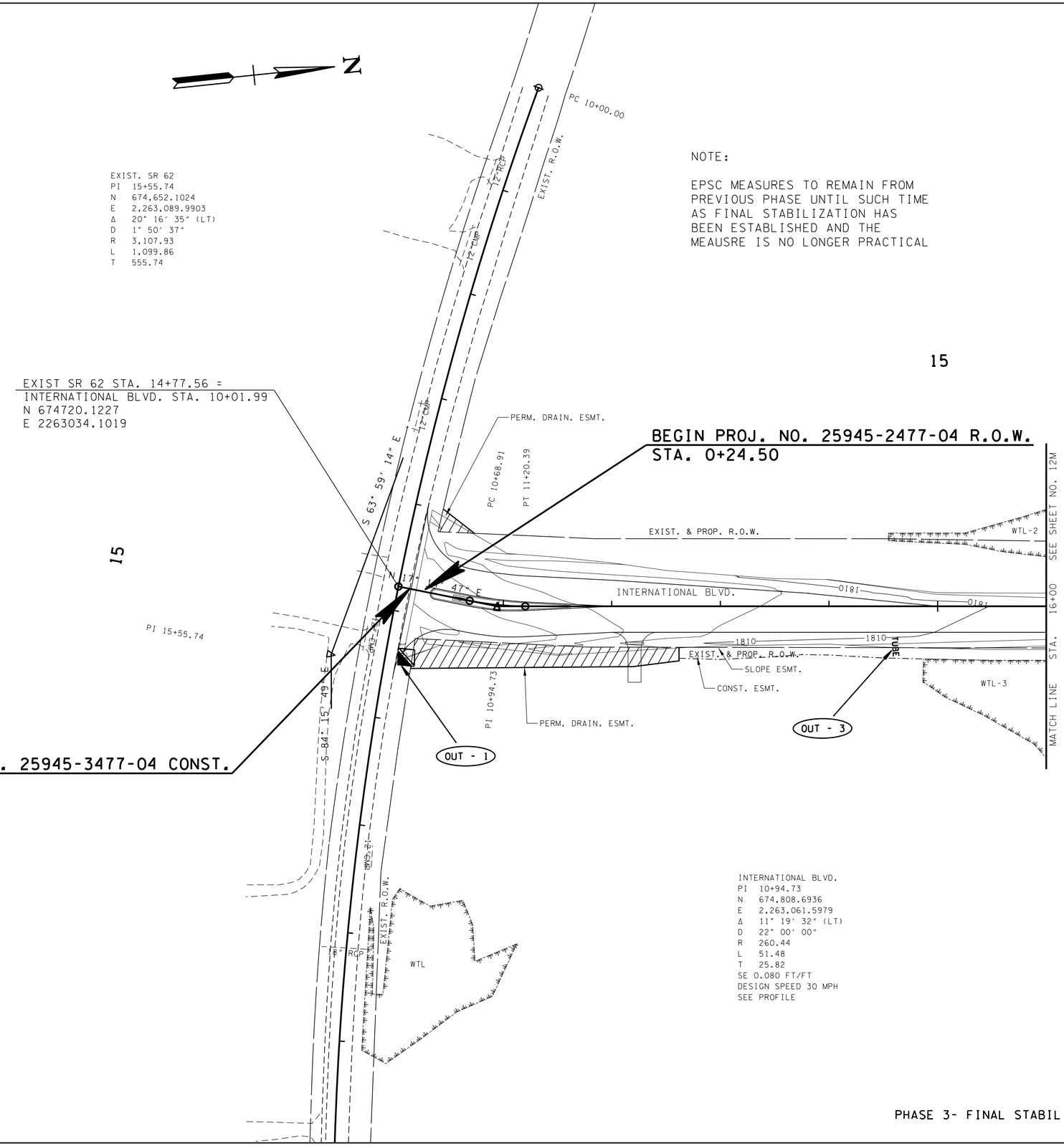


INTERNATIONAL BLVD.
PI 10+94.73
N 674,808.6936
E 2,263,061.5979
Δ 11° 19' 32" (LT)
D 22° 00' 00"
R 260.44
L 51.48
T 25.82
SE 0.080 FT/FT
DESIGN SPEED 30 MPH
SEE PROFILE

PHASE 3- FINAL STABILIZATION

**UNOFFICIAL SET**

**NOT FOR BIDDING**

SEALED BY

Brian H. Trotter
REGISTERED ENGINEER
No. 104319
STATE OF TENNESSEE

COORDINATES ARE NAD/83(1995), ARE DATUM ADJUSTED BY THE FACTOR OF 1.000120 AND TIED TO THE TGRN. ALL ELEVATIONS ARE REFERENCED TO THE NAVD 1988.

STATE OF TENNESSEE
DEPARTMENT OF TRANSPORTATION

# EROSION PREVENTION AND SEDIMENT CONTROL PLAN

BEGIN PROJ. TO STA. 16+00

SCALE: 1"= 50'

2/9/2015 1:11:02 PM
H:\11600 3\Dgn\012L.sht

| TYPE | YEAR | PROJECT NO. | SHEET NO. |
|---|---|---|---|
| R.O.W. | 2014 | 25945-2477-04 | 12M |
| CONST. | 2015 | 25945-3477-04 | 12M |
| | | | |
| | | | |

REV 09-19-14: REVISED REMAINDER WTL-2 & WTL-3

NOTE:

EPSC MEASURES TO REMAIN FROM PREVIOUS PHASE UNTIL SUCH TIME AS FINAL STABILIZATION HAS BEEN ESTABLISHED AND THE MEAUSRE IS NO LONGER PRACTICAL

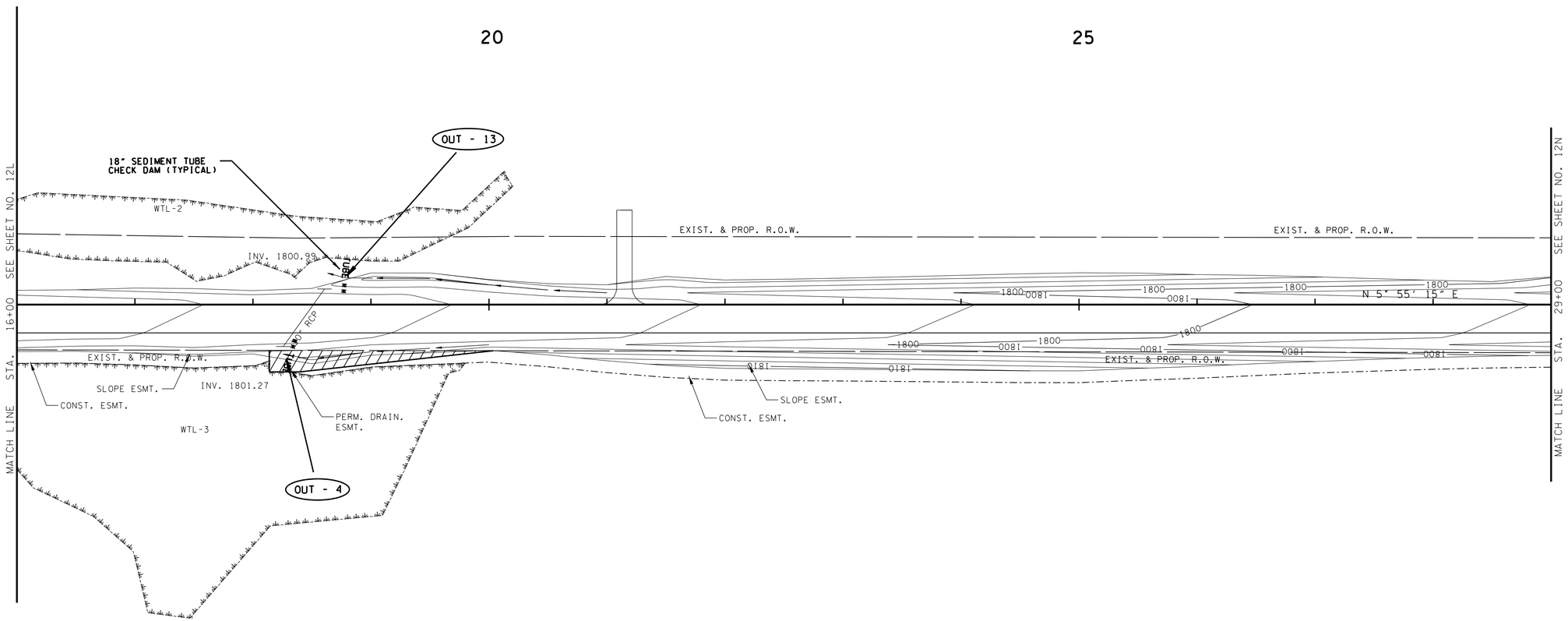


PHASE 3- FINAL STABILIZATION

**UNOFFICIAL SET**

**NOT FOR BIDDING**

SEALED BY

COORDINATES ARE NAD/83(1995), ARE DATUM ADJUSTED BY THE FACTOR OF 1.000120 AND TIED TO THE TGRN. ALL ELEVATIONS ARE REFERENCED TO THE NAVD 1988.

STATE OF TENNESSEE
DEPARTMENT OF TRANSPORTATION

# EROSION PREVENTION AND SEDIMENT CONTROL PLAN

STA. 16+00 TO STA. 29+00

SCALE: 1"= 50'

2/9/2015 1:11:02 PM
H:\116003\Dgn\012M.sht

| TYPE | YEAR | PROJECT NO. | SHEET NO. |
|---|---|---|---|
| R.O.W. | 2014 | 25945-2477-04 | 12N |
| CONST. | 2015 | 25945-3477-04 | 12N |
| | | | |
| | | | |

NOTE:

EPSC MEASURES TO REMAIN FROM PREVIOUS PHASE UNTIL SUCH TIME AS FINAL STABILIZATION HAS BEEN ESTABLISHED AND THE MEAUSRE IS NO LONGER PRACTICAL

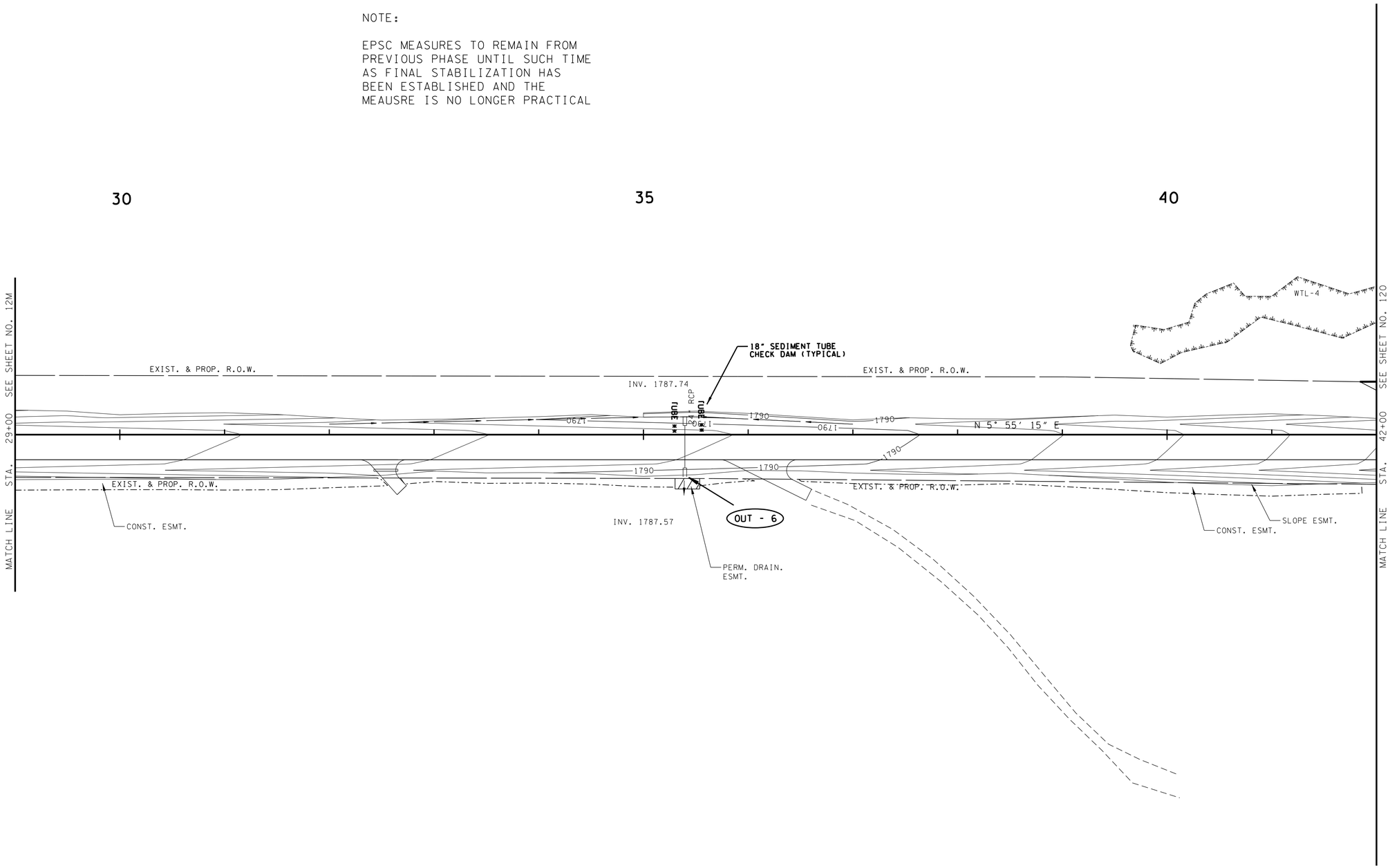


PHASE 3- FINAL STABILIZATION

**UNOFFICIAL SET**

**NOT FOR BIDDING**

SEALED BY

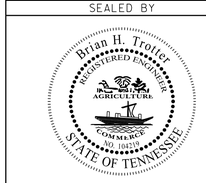


COORDINATES ARE NAD/83(1995), ARE DATUM ADJUSTED BY THE FACTOR OF 1.000120 AND TIED TO THE TGRN. ALL ELEVATIONS ARE REFERENCED TO THE NAVD 1988.

STATE OF TENNESSEE
DEPARTMENT OF TRANSPORTATION

# EROSION PREVENTION AND SEDIMENT CONTROL PLAN

STA. 29+00 TO STA. 42+00

SCALE: 1"= 50'

2/9/2015 11:03 PM
H:\116003\Dgn\012N.sht

| TYPE | YEAR | PROJECT NO. | SHEET NO. |
|---|---|---|---|
| R.O.W. | 2014 | 25945-2477-04 | 120 |
| CONST. | 2015 | 25945-3477-04 | 120 |
| | | | |
| | | | |

REV 09-19-14: REVISED WETLAND REMAINDER WTL-4

REV 12-05-14: REVISED WETLAND REMAINDER WTL-4

NOTE:

EPSC MEASURES TO REMAIN FROM PREVIOUS PHASE UNTIL SUCH TIME AS FINAL STABILIZATION HAS BEEN ESTABLISHED AND THE MEAUSRE IS NO LONGER PRACTICAL

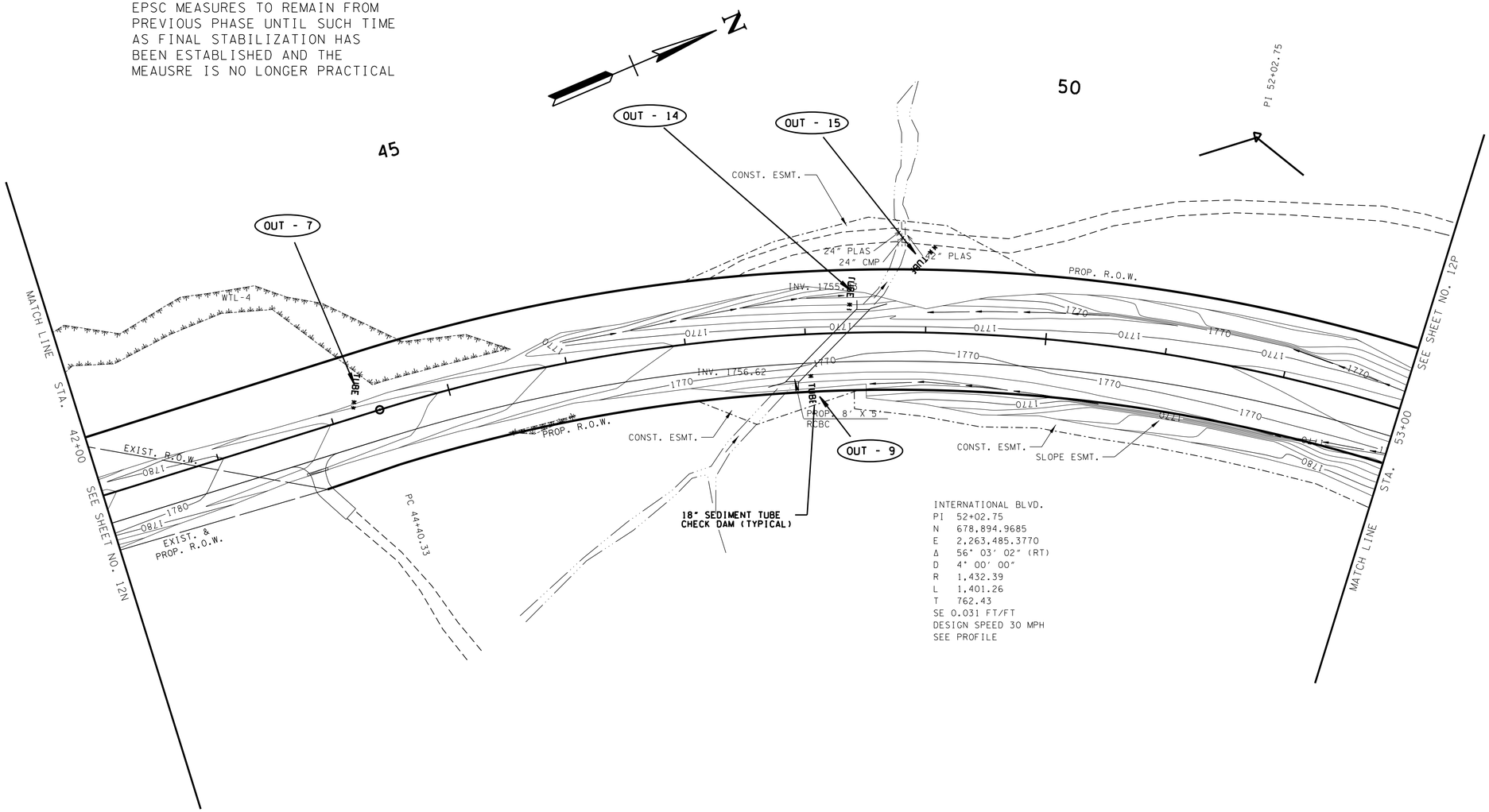


INTERNATIONAL BLVD.
PI 52+02.75
N 678,894.9685
E 2,263,485.3770
Δ 56° 03′ 02″ (RT)
D 4° 00′ 00″
R 1,432.39
L 1,401.26
T 762.43
SE 0.031 FT/FT
DESIGN SPEED 30 MPH
SEE PROFILE

PHASE 3 - FINAL STABILIZATION

**UNOFFICIAL SET**

**NOT FOR BIDDING**

SEALED BY

Brian H. Trotter
REGISTERED ENGINEER
AGRICULTURE
COMMERCE
NO. 104319
STATE OF TENNESSEE

COORDINATES ARE NAD/83(1995), ARE DATUM ADJUSTED BY THE FACTOR OF 1.000120 AND TIED TO THE TGRN. ALL ELEVATIONS ARE REFERENCED TO THE NAVD 1988.

STATE OF TENNESSEE
DEPARTMENT OF TRANSPORTATION

# EROSION PREVENTION AND SEDIMENT CONTROL PLAN

STA. 42+00 TO STA. 53+00

SCALE: 1"= 50'

2/9/2015 1:11:03 PM
H:\116003\Dgn\0120.sht

| TYPE | YEAR | PROJECT NO. | SHEET NO. |
|---|---|---|---|
| R.O.W. | 2014 | 25945-2477-04 | 12P |
| CONST. | 2015 | 25945-3477-04 | 12P |
| | | | |
| | | | |

NOTE:

EPSC MEASURES TO REMAIN FROM PREVIOUS PHASE UNTIL SUCH TIME AS FINAL STABILIZATION HAS BEEN ESTABLISHED AND THE MEAUSRE IS NO LONGER PRACTICAL

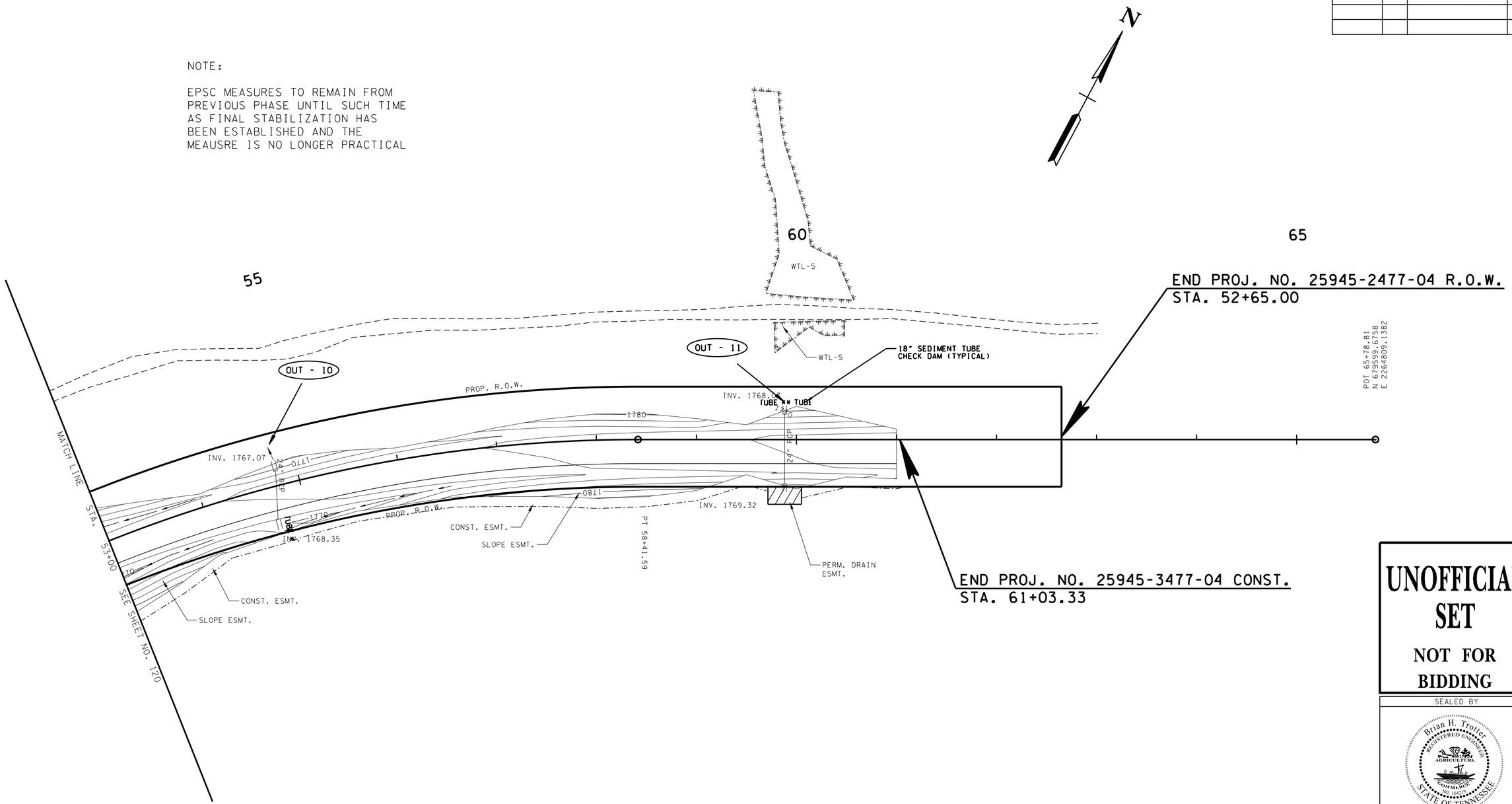


UNOFFICIAL SET

NOT FOR BIDDING

SEALED BY

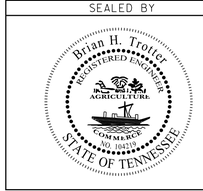


COORDINATES ARE NAD/83(1995), ARE DATUM ADJUSTED BY THE FACTOR OF 1.000120 AND TIED TO THE TGRN. ALL ELEVATIONS ARE REFERENCED TO THE NAVD 1988.

STATE OF TENNESSEE
DEPARTMENT OF TRANSPORTATION

EROSION PREVENTION AND SEDIMENT CONTROL PLAN

STA. 53+00 TO END PROJ.

SCALE: 1"= 50'

PHASE 3- FINAL STABILIZATION

2/9/2015 1:11:03 PM
H:\116003\Dgn\012P.sht

| TYPE | YEAR | PROJECT NO. | SHEET NO. |
|---|---|---|---|
| CONST. | 2015 | 25945-3477-04 | 13 |
| | | | |
| | | | |
| | | | |

## TRAFFIC CONTROL LEGEND

| SYMBOL | ITEM |
|---|---|
| | WORK ZONE |
| | FLEXIBLE DRUMS (CHANNELIZING) |
| | SIGN (CONSTRUCTION) |
| | TEMPORARY BARRICADE (TYPE III) |

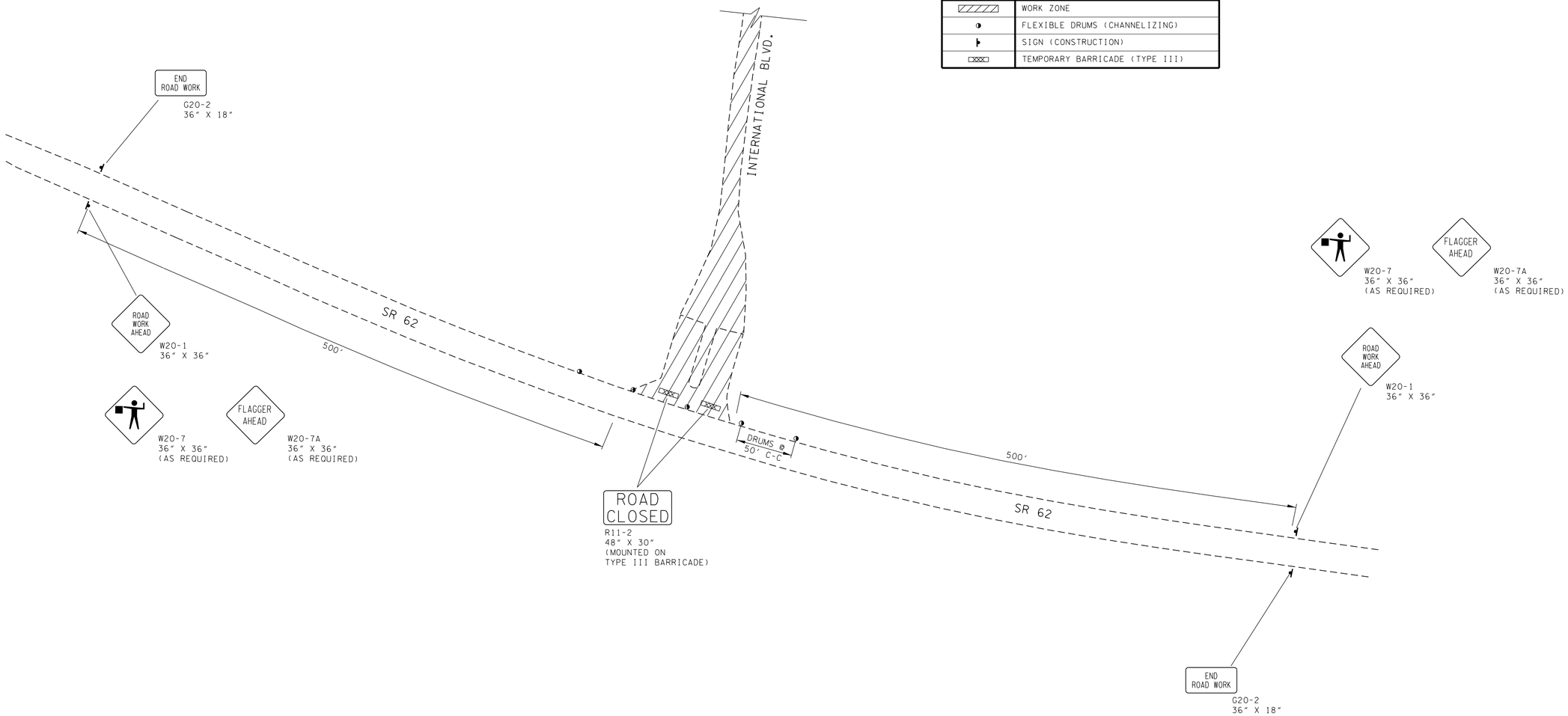


## CONSTRUCTION SIGNS

| | DESCRIPTION | NO. REQ'D. | SIZE | SIGN I.D. NO. | QTY. | UNIT |
|---|---|---|---|---|---|---|
| | | | | | | |
| | END ROAD WORK | 2 | 36"X18" | G20-2 | 9 | S.F. |
| | ROAD CLOSED | 2 | 48"X30" | R11-2 | 20 | S.F. |
| | ROAD WORK AHEAD | 2 | 36"X36" | W20-1 | 18 | S.F. |
| * | FLAGGER SYMBOL | 2 | 36"X36" | W20-7 | 18 | S.F. |
| * | FLAGGER AHEAD | 2 | 36"X36" | W20-7A | 18 | S.F. |
| | | | | | | |
| | | | | | | |
| | **ITEM 712-06 SIGNS (CONSTRUCTION)** | | | | **83.0** | **S.F.** |

* TO BE USED WHEN AND AS APPROVED BY THE ENGINEER.

## ITEMIZED TRAFFIC CONTROL DEVICES

| ITEM NO. | DESCRIPTION | TOTALNO. REQ'D. | UNITS |
|---|---|---|---|
| | | | |
| 712-04.01 | FLEXIBLE DRUMS( CHANNELIZING) | 5 | EACH |
| 712-06 | SIGNS (CONSTRUCTION) | 83 | S.F. |
| 712-07.03 | TEMPORARY BARRICADES (TYPE III) | 48 | L.F. |
| | | | |

**UNOFFICIAL SET**

**NOT FOR BIDDING**

SEALED BY

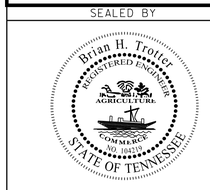


STATE OF TENNESSEE
DEPARTMENT OF TRANSPORTATION

TRAFFIC CONTROL NOTES AND ADVANCE WARNING SIGNS

2/9/2015 11:04 PM
H:\lll6003\Dgn\013.sht

| TYPE | YEAR | PROJECT NO. | SHEET NO. |
|---|---|---|---|
| CONST | 2015 | 25945-3477-04 | 13A |
| | | | |
| | | | |
| | | | |

# PAVEMENT EDGE DROP-OFF TRAFFIC CONTROL NOTES

A. DIFFERENCES IN ELEVATION BETWEEN ADJACENT TRAFFIC LANES OR TRAFFIC LANE AND SHOULDER WHERE THE TRAFFIC LANE IS BEING USED BY TRAFFIC, CAUSED BY BASE, PAVING OR RESURFACING:

1. DIFFERENCES IN ELEVATION BETWEEN ADJACENT ROADWAY ELEMENTS GREATER THAN 0.75 INCH AND NOT EXCEEDING 2 INCHES:

a. WARNING SIGNS, UNEVEN LANES (W8-11) AND/OR SHOULDER DROP-OFF WITH PLAQUE (W8-17 AND W8-17P), SHALL BE PLACED IN ADVANCE OF AND THROUGHOUT THE EXPOSED AREA. MAXIMUM SPACING BETWEEN SIGNS SHALL BE 2,000 FEET WITH A MINIMUM OF 2 SIGNS PER EXPOSED AREA. WHERE UNEVEN PAVEMENT IS ENCOUNTERED, SIGNS SHALL BE PLACED ON EACH SIDE OF THE ROADWAY.

b. DIFFERENCES IN ELEVATION BETWEEN ADJACENT TRAFFIC LANES BEING UTILIZED BY TRAFFIC CAUSED BY ADDED PAVEMENT SHALL BE ELIMINATED WITHIN THREE WORKDAYS.

c. DIFFERENCES IN ELEVATION BETWEEN ADJACENT TRAFFIC LANES BEING UTILIZED BY TRAFFIC CAUSED BY COLD PLANING SHALL BE ELIMINATED WITHIN THREE WORKDAYS.

d. WHEN THE DIFFERENCE IN ELEVATION IS BETWEEN THE TRAFFIC LANE BEING UTILIZED BY TRAFFIC AND SHOULDER THE DIFFERENCE IN ELEVATION SHALL BE ELIMINATED WITHIN SEVEN WORKDAYS AFTER THE CONDITION IS CREATED.

2. DIFFERENCES IN ELEVATION BETWEEN ADJACENT ROADWAY ELEMENTS GREATER THAN 2 INCHES AND NOT EXCEEDING 6 INCHES. TRAFFIC IS NOT TO BE ALLOWED TO TRAVERSE THIS DIFFERENCE IN ELEVATION.

a. SEPARATION SHALL BE ACCOMPLISHED BY DRUMS, BARRICADES OR OTHER APPROVED DEVICES IN ACCORDANCE WITH THE FOLLOWING:

(1) WHERE POSTED SPEEDS ARE 50 MPH OR GREATER, SPACING OF THE PROTECTIVE DEVICES SHALL NOT EXCEED 100 FEET.

(2) WHERE POSTED SPEEDS ARE LESS THAN 50 MPH, THE MAXIMUM SPACING OF THE PROTECTIVE DEVICES IN FEET SHALL NOT EXCEED TWICE THE POSTED SPEED IN MILES PER HOUR OR 50 FEET, WHICHEVER SPACING IS GREATER.

b. IF THE DIFFERENCE IN ELEVATION IS ELIMINATED OR DECREASED TO 2 INCHES OR LESS BY THE END OF EACH WORKDAY, CONES MAY BE USED DURING DAYLIGHT HOURS IN LIEU OF DRUMS, BARRICADES OR OTHER APPROVED PROTECTIVE DEVICES MENTIONED IN PARAGRAPH a, PROVIDED WARNING SIGNS ARE ERECTED. WARNING SIGNS (UNEVEN LANES AND/OR SHOULDER DROP-OFF) SHALL BE PLACED IN ADVANCE OF AND THROUGHOUT THE EXPOSED AREA. MAXIMUM SPACING BETWEEN SIGNS SHALL BE 2,000 FEET WITH A MINIMUM OF 2 SIGNS PER EXPOSED AREA. WHERE UNEVEN PAVEMENT IS ENCOUNTERED, SIGNS SHALL BE PLACED ON EACH SIDE OF THE ROADWAY.

c. WHEN THE DIFFERENCE IN ELEVATION IS BETWEEN THE THROUGH TRAFFIC LANE AND THE SHOULDER AND THE ELEVATION DIFFERENCE IS LESS THAN 3.5 INCHES, THE CONTRACTOR MAY USE WARNING SIGNS AND/OR PROTECTIVE DEVICES AS APPLICABLE AND APPROVED BY THE ENGINEER. SEE PARAGRAPH a REGARDING USE OF DRUMS, BARRICADES OR OTHER APPROVED PROTECTIVE DEVICES. WARNING SIGNS (UNEVEN LANES AND/OR SHOULDER DROP-OFF) WILL BE PLACED IN ADVANCE OF AND THROUGHOUT THE EXPOSED AREA. MAXIMUM SPACING BETWEEN SIGNS SHALL BE 2,000 FEET WITH A MINIMUM OF 2 SIGNS PER EXPOSED AREA. WHERE UNEVEN PAVEMENT IS ENCOUNTERED, SIGNS SHALL BE PLACED ON EACH SIDE OF THE ROADWAY.

IN THESE SITUATIONS, THE CONTRACTOR SHALL LIMIT HIS OPERATIONS TO ONE WORK ZONE NOT EXCEEDING 2 MILES IN LENGTH UNLESS OTHERWISE NOTED ON THE PLANS OR APPROVED BY THE ENGINEER. ONCE THE CONTRACTOR BEGINS WORK IN A WORK ZONE, A CONTINUOUS OPERATION SHALL BE MAINTAINED UNTIL THE DIFFERENCE IN ELEVATION IS ELIMINATED. SIMULTANEOUS WORK ON SEPARATE ROADWAYS OF DIVIDED HIGHWAYS WILL BE CONSIDERED INDEPENDENTLY IN REGARD TO RESTRICTION OF WORK ZONE ACTIVITY.

3. DIFFERENCES IN ELEVATION BETWEEN ADJACENT ROADWAY ELEMENTS GREATER THAN 6 INCHES BUT NOT EXCEEDING 18 INCHES, THE CONTRACTOR, WITH THE ENGINEER'S APPROVAL, MAY UTILIZE ONE OF THE FOLLOWING:

a. THE CONTRACTOR SHALL ACCOMPLISH SEPARATION BY DRUMS, BARRICADES OR OTHER APPROVED DEVICES IN ACCORDANCE WITH THE FOLLOWING:

(1) WHERE POSTED SPEEDS ARE 50 MPH OR GREATER, SPACING OF THE PROTECTIVE DEVICES SHALL NOT EXCEED 100 FEET.

(2) WHERE POSTED SPEEDS ARE LESS THAN 50 MPH, THE MAXIMUM SPACING OF THE PROTECTIVE DEVICES IN FEET SHALL NOT EXCEED TWICE THE POSTED SPEED IN MILES PER HOUR OR 50 FEET, WHICHEVER SPACING IS GREATER.

IN ORDER TO USE THIS METHOD, THE CONTRACTOR MUST REDUCE THE DIFFERENCE IN ELEVATION TO 6 INCHES OR LESS BY THE END OF THE WORKDAY THAT THE CONDITION IS CREATED.

b. THE CONTRACTOR SHALL PROVIDE DRUMS, BARRICADES OR OTHER APPROVED SEPARATION DEVICES AS SPECIFIED IN PARAGRAPH a, AND CONSTRUCT A STONE WEDGE WITH A 4:1 SLOPE, OR FLATTER, TO ELIMINATE THE VERTICAL OFFSET IF THE LOWER ELEVATION IS AT OR BELOW SUBGRADE AT THE END OF EACH DAY.

c. THE CONTRACTOR SHALL PROVIDE DRUMS, BARRICADES OR OTHER APPROVED SEPARATION DEVICES AS SPECIFIED IN PARAGRAPH a AND IF THE LOWER ELEVATION IS BASE STONE OR ASPHALT PAVEMENT, PLACEMENT OF SUBSEQUENT LAYERS OF PAVEMENT MUST BEGIN THE NEXT WORK DAY AND PROGRESS CONTINUOUSLY UNTIL THE DIFFERENCE IN ELEVATION IS ELIMINATED OR REDUCED TO SIX INCHES OR LESS.

d. THE CONTRACTOR SHALL PROVIDE SEPARATION BY PORTABLE BARRIER RAIL.

FOR PRECEDING CONDITIONS a, b, AND c, THE CONTRACTOR SHALL USE THE SHOULDER DROP-OFF WARNING SIGN WITH PLAQUE (W8-17 AND W8-17P). IT SHALL BE PLACED IN ADVANCE OF AND THROUGHOUT THE EXPOSED AREA. MAXIMUM SPACING BETWEEN THE SIGNS SHALL BE 2,000 FEET WITH A MINIMUM OF 2 SIGNS PER EXPOSED AREA. IN THESE SITUATIONS, THE CONTRACTOR SHALL LIMIT HIS OPERATIONS TO ONE WORK ZONE NOT EXCEEDING 1 MILE IN LENGTH UNLESS OTHERWISE NOTED ON THE PLANS OR APPROVED BY THE ENGINEER. ONCE THE CONTRACTOR BEGINS WORK IN A WORK ZONE, A CONTINUOUS OPERATION SHALL BE MAINTAINED UNTIL THE DIFFERENCE IS ELIMINATED. SIMULTANEOUS WORK ON SEPARATE ROADWAYS OF DIVIDED HIGHWAYS WILL BE CONSIDERED INDEPENDENTLY IN REGARD TO RESTRICTION OF WORK ZONE ACTIVITY.

4. FOR DIFFERENCES IN ELEVATION BETWEEN ADJACENT ROADWAY ELEMENTS GREATER THAN 18 INCHES.

SEPARATION WILL BE PROVIDED BY USE OF PORTABLE BARRIER RAIL.

IN THIS SITUATION THE CONTRACTOR SHALL LIMIT HIS OPERATIONS TO ONE WORK ZONE NOT EXCEEDING 1 MILE IN LENGTH UNLESS OTHERWISE NOTED ON THE PLANS OR APPROVED BY THE ENGINEER. ONCE THE CONTRACTOR BEGINS WORK IN A WORK ZONE, A CONTINUOUS OPERATION SHALL BE MAINTAINED UNTIL THE DIFFERENCE IN ELEVATION IS ELIMINATED. SIMULTANEOUS WORK ON SEPARATE ROADWAYS OF DIVIDED HIGHWAYS WILL BE CONSIDERED INDEPENDENTLY IN REGARD TO RESTRICTION OF WORK ZONE ACTIVITY.

B. IF THE DIFFERENCE IN ELEVATION IS WITHIN 30 FEET OF THE NEAREST TRAFFIC LANE BEING USED BY TRAFFIC CAUSED BY GRADING, EXCAVATION FOR UTILITIES, DRAINAGE STRUCTURES, UNDERCUTTING, ETC.:

1. IF THE DIFFERENCE IN ELEVATION IS WITHIN 8 FEET OF THE NEAREST TRAFFIC LANE WITH DIFFERENCE IN ELEVATION GREATER THAN 3/4 INCH AND NOT EXCEEDING 2 INCHES.

WARNING SIGNS (UNEVEN LANES AND/OR SHOULDER DROP-OFF) SHALL BE PLACED IN ADVANCE OF AND THROUGHOUT THE EXPOSED AREA. MAXIMUM SPACING BETWEEN SIGNS SHALL BE 2,000 FEET WITH A MINIMUM OF 2 SIGNS PER EXPOSED AREA. WHERE UNEVEN PAVEMENT IS ENCOUNTERED, SIGNS SHALL BE PLACED ON EACH SIDE OF THE ROADWAY.

2. IF THE DIFFERENCE IN ELEVATION IS WITHIN 8 FEET OF THE NEAREST TRAFFIC LANE WITH DIFFERENCE IN ELEVATION GREATER THAN 2 INCHES AND NOT EXCEEDING 6 INCHES:

a. SEPARATION SHALL BE ACCOMPLISHED BY DRUMS, BARRICADES OR OTHER APPROVED DEVICES IN ACCORDANCE WITH THE FOLLOWING:

(1) WHERE POSTED SPEEDS ARE 50 MPH OR GREATER, SPACING OF THE PROTECTIVE DEVICES SHALL NOT EXCEED 100 FEET.

(2) WHERE POSTED SPEEDS ARE LESS THAN 50 MPH THE MAXIMUM SPACING OF THE PROTECTIVE DEVICES IN FEET SHALL NOT EXCEED TWICE THE POSTED SPEED IN MILES PER HOUR OR 50 FEET, WHICHEVER SPACING IS GREATER.

3. IF THE DIFFERENCE IN ELEVATION IS WITHIN 8 FEET OF THE NEAREST TRAFFIC LANE WITH DIFFERENCE IN ELEVATION GREATER THAN 6 INCHES:

a. SEPARATION SHALL BE ACCOMPLISHED BY DRUMS, BARRICADES OR OTHER APPROVED DEVICES IN ACCORDANCE WITH THE FOLLOWING:

(1) WHERE POSTED SPEEDS ARE 50 MPH OR GREATER, SPACING OF THE PROTECTIVE DEVICES SHALL NOT EXCEED 100 FEET.

(2) WHERE POSTED SPEEDS ARE LESS THAN 50 MPH THE MAXIMUM SPACING OF THE PROTECTIVE DEVICES IN FEET SHALL NOT EXCEED TWICE THE POSTED SPEED IN MILES PER HOUR OR 50 FEET, WHICHEVER SPACING IS GREATER.

b. ELIMINATE VERTICAL OFFSET BY CONSTRUCTING A STONE WEDGE OR GRADING TO A 4:1 SLOPE, OR FLATTER, OR USE PORTABLE BARRIER RAIL.

THE CONTRACTOR SHALL SCHEDULE THE WORK SO AS TO MINIMIZE THE TIME TRAFFIC IS EXPOSED TO AN ELEVATION DIFFERENCE. ONCE THE CONTRACTOR BEGINS AN ACTIVITY THAT CREATES AN ELEVATION DIFFERENCE WITHIN 8 FEET OF A TRAFFIC LANE, THE ACTIVITY SHALL BE PURSUED AS A CONTINUOUS OPERATION UNTIL THE ELEVATION DIFFERENCE IS ELIMINATED.

C. IF THE DIFFERENCE IN ELEVATION IS FARTHER THAN 8 FEET FROM THE NEAREST TRAFFIC LANE BUT NOT MORE THAN 30 FEET FROM THE NEAREST TRAFFIC LANE:

SEPARATION SHALL BE ACCOMPLISHED BY DRUMS, BARRICADES OR OTHER APPROVED DEVICES IN ACCORDANCE WITH THE FOLLOWING:

1. WHERE POSTED SPEEDS ARE 50 MPH OR GREATER, SPACING OF THE PROTECTIVE DEVICES SHALL NOT EXCEED 100 FEET.

2. WHERE POSTED SPEEDS ARE LESS THAN 50 MPH, THE MAXIMUM SPACING OF THE PROTECTIVE DEVICES IN FEET SHALL NOT EXCEED TWICE THE POSTED SPEED IN MILES PER HOUR OR 50 FEET, WHICHEVER SPACING IS GREATER.

THE CONTRACTOR SHALL SCHEDULE THE WORK SO AS TO MINIMIZE THE TIME TRAFFIC IS EXPOSED TO AN ELEVATION DIFFERENCE. ONCE THE CONTRACTOR BEGINS AN ACTIVITY THAT CREATES AN ELEVATION DIFFERENCE, THE ACTIVITY SHALL BE PURSUED AS A CONTINUOUS OPERATION UNTIL THE ELEVATION DIFFERENCE IS ELIMINATED.

UNOFFICIAL SET

NOT FOR BIDDING

SEALED BY

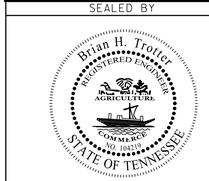


STATE OF TENNESSEE
DEPARTMENT OF TRANSPORTATION

PAVEMENT EDGE DROP-OFF TRAFFIC CONTROL NOTES

2/9/2015 11:32 PM
H:\ill6003\Dgn\013a.sht

| TYPE | YEAR | PROJECT NO. | SHEET NO. |
|---|---|---|---|
| CONST. | 2015 | 25945-3477-04 | 14 |

## GEOTECHNICAL NOTES

1. REFERENCES TO THE GEOTECHNICAL REPORT ARE FOR: "ALIGNMENT GEOTECHNICAL REPORT FOR PROPOSED ACCESS FOR SIA CLARKRANGE REGIONAL BUSINESS PARK, FENTRESS COUNTY, TENNESSEE," TDOT PROJECT 25945-3477-04, PIN 117511.00.
2. THE CONTRACTOR SHALL BE RESPONSIBLE FOR MAKING THE EXCAVATION IN ACCORDANCE WITH OSHA AND OTHER APPLICABLE STATE AND LOCAL REGULATIONS REGARDING CONSTRUCTION SLOPES AND TRENCHES. IN ADDITION TO FOLLOWING APPLICABLE REGULATORY REQUIREMENTS, AS A MINIMUM REQUIREMENT, ALL TEMPORARY CONSTRUCTION SLOPES SHALL BE PLACED AT A MAXIMUM OF A 1:1 SLOPE IN SOIL AND SHALL NOT BE LEFT OPEN WITHOUT SHORING FOR ANY LONGER THAN NECESSARY. THE CONTRACTOR BUILDING THE WALL SHALL ENSURE THAT THESE TEMPORARY BACK SLOPES ARE NOT UNSTABLE AND DO NOT BECOME UNSTABLE. IF SLOPE IS UNSTABLE, BECOMES UNSTABLE, CUT STEEPER THAN A 1:1 SLOPE OR IS UNACCEPTABLE FOR ANOTHER REASON, THEN TEMPORARY SHORING SHALL BE USED. REPORT ANY UNUSUAL SOIL CONDITIONS, OTHER THAN THOSE ASSUMED, TO THE PROJECT ENGINEER.

## SOIL DESCRIPTIONS

### (A) — SOIL MATERIAL/FILL

SOIL MATERIAL IS PREDOMINANTLY MADE UP OF NATURALLY OCCURRING MINERAL PARTICLES WHICH ARE FAIRLY READILY SEPARATED INTO RELATIVELY SMALL PIECES, AND IN WHICH THE MASS MAY CONTAIN AIR, OR ORGANIC MATERIALS. THIS MATERIAL MAY CONTAIN ROCK PIECES IN THE FORM OF DISCONNECTED SLABS, LENSES, OR BOULDERS OF LESS THAN APPROXIMATELY 0.5 CUBIC YARDS. THE MAIN SOIL GROUPS CONSIST OF CLAY, SILT, SAND, GRAVEL, COBBLES, BOULDERS (LESS THAN 0.5 CUBIC YARD VOLUME) OR A COMBINATION OF ANY OF THE CONSTITUENTS. FOR CONSTRUCTION PURPOSES, THIS MATERIAL WOULD TYPICALLY BE CONSIDERED TO BE EXCAVATABLE BY CONVENTIONAL EXCAVATION MACHINERY SUCH AS PANS, TRACK HOES, OR FRONT END EXCAVATORS/LOADERS. THIS MATERIAL WOULD HAVE A SHRINK FACTOR AS GIVEN IN THE SHRINK FACTORS SHOWN IN SECTION 2-145.10 OF THE DESIGN GUIDELINES OR AS RECOMMENDED BY THE GEOTECHNICAL ENGINEERING SECTION OF THE MATERIALS AND TEST DIVISION.

### (B) — SOLID ROCK MATERIAL

SOLID ROCK MATERIAL IS NATURALLY OCCURRING MATERIAL COMPOSED OF MINERAL PARTICLES SO FIRMLY BONDED TOGETHER THAT RELATIVELY GREAT EFFORT IS REQUIRED TO SEPARATE THE PARTICLES (I.E. BLASTING OR HEAVY CRUSHING FORCES). FOR CONSTRUCTION PURPOSES, THIS MATERIAL WOULD TYPICALLY HAVE TO BE BLASTED TO SEPARATE INTO PIECES SMALL ENOUGH TO LOAD AND TRANSPORT ON EARTH MOVING TRUCKS AND WHICH WHEN SUBJECTED TO PROPER PRE-SPLIT AND PRODUCTION BLASTING WOULD RESULT IN A UNIFORM STABLE ROCKCUT FACE. NOTE THAT THIS MATERIAL WOULD NOT BY DEFINITION NECESSARILY BE A PROVEN SOURCE OF ANY ROCK TYPE AGGREGATE SUCH AS SOLID ROCK, GRADED SOLID ROCK, RIP RAP, OR OTHER ROCK AGGREGATE CONSTRUCTION PRODUCTS. THIS MATERIAL WOULD HAVE A SIGNIFICANT SWELL FACTOR AS GIVEN IN SWELL FACTORS SHOWN IN SECTION 2-145.10 OF THE DESIGN GUIDELINES OR AS RECOMMENDED BY THE GEOTECHNICAL ENGINEERING SECTION OF THE MATERIALS AND TEST DIVISION.

### (C) — SOFT ROCK OR DEGRADABLE ROCK

THIS MATERIAL IS NATURALLY OCCURRING MATERIAL COMPOSED OF MINERAL PARTICLES THAT ARE SO FIRMLY BONDED SUCH THAT THEY ARE NOT FAIRLY READILY SEPARATED INTO SMALL PIECES YET HAS SUCH RELATIVELY LOW BONDING STRENGTH THAT WOULD ALLOW FOR SEPARATING INTO SMALL PIECES THROUGH MODERATE TO HEAVY CRUSHING FORCES. FOR CONSTRUCTION PUPOSES, THIS MATERIAL WOULD HAVE TO BE SUBJECTED TO RIPPING TYPE EQUIPMENT, HOE RAMS, OR RUGGED USE OF A LARGE BULLDOZER IN ORDER TO SEPARATE THE MATERIAL SUCH THAT IT CAN BE READILY LOADED INTO EARTH MOVING TRUCKS. THESE MATERIALS WOULD TYPICALLY BE SHALES, CLAYSTONES, SILTSTONES, WEATHERED SANDSTONES, WEATHERED SCHIST AND WEATHERED GNEISS. THIS MATERIAL WOULD HAVE A RELATIVELY SMALL SHRINK OR SWELL FACTOR DEPENDING ON THE TYPE OF MATERIAL AND THE DEGREE OF WEATHERING, DISINTEGRATION, OR DEGRADATION.

### (D) — TRANSITIONAL MATERIAL

THIS MATERIAL IS COMPRISED OF A COMBINATION OF SOIL AND ROCK (MATERIAL A, B, AND C AS DEFINED IN SECTION 4-230.02 OF THE TDOT ROADWAY DESIGN GUIDELINES) OCCURRING IN EITHER NON-UNIFORM INTERBEDDED LAYERS OF THE ABOVE MATERIALS (I.E. SHALE MATERIAL WITH REALTIVELY THIN LAYERS OF SOLID ROCK SUCH AS HARD LIMESTONE) OR ERRATIC LOCALIZED CHANGES OF MATERIAL TYPES BOTH LATERALLY AND WITH DEPTH (SUCH AS A GEOLOGIC FORMATION RESULTING IN PINNACLED ROCK COLUMNS, FLOATING BOULDERS OR LENSES INTERCALATED WITH CLAY SOIL, A COMMON OCCURRENCE IN CERTAIN REGIONS OF TENNESSEE). FOR CONSTRUCTION PURPOSES, THIS MATERIAL MAY HAVE TO BE EXCAVATED USING A COMBINATION OF EXCAVATION METHODS SUCH AS BLASTING OF ROCK PINNACLES, LAYERS OF BOULDERS ALONG WITH RIPPING OF WEATHERED ROCK AND EXCAVATING OF SOIL WITH TRACK HOES OR LOADERS ALL WITHIN A LOCALIZED AREA. THIS MATERIAL WOULD NOT BE SUITABLE FOR THE USE OF EXCAVATING PAN TYPE EQUIPMENT.

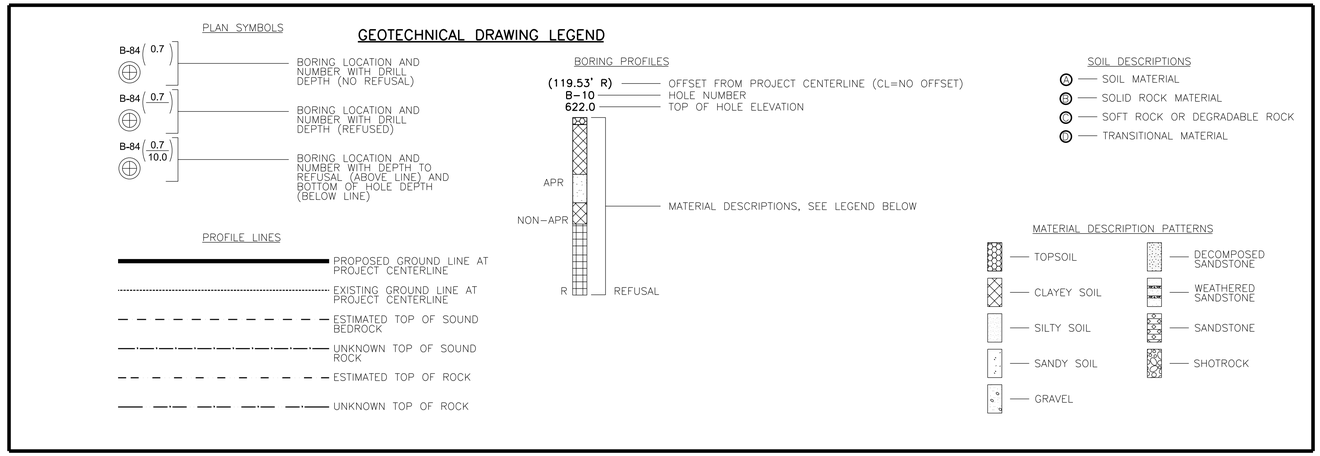


## GENERAL NOTES (GEOTECHNICAL):

1. ROADWAY ALIGNMENT BASED ON DATA PROVIDED BY TENNESSEE DEPARTMENT OF TRANSPORTATION (TDOT) ON SEPTEMBER 03, 2014.
2. GROUNDLINE PROFILES BASED ON DATA PROVIDED BY TDOT ON SEPTEMBER 03, 2014.
3. BOREHOLE ELEVATIONS PROVIDED BY AMEC WHO USED EXISTING SURVEY BENCHMARKS AND ELEVATIONS ON SITE.
4. REPORT OF SUBSURFACE EXPLORATION AND GEOTECHNICAL ENGINEERING STUDY FOR PROPOSED ACCESS ALIGNMENT FOR CLARKRANGE REGIONAL BUSINESS PARK AMEC FILE NO. 5-6979-0002 AVAILABLE FROM AMEC FOSTER WHEELER, ENVIRONMENT & INFRASTRUCTURE, INC. NASHVILLE, TENNESSEE (615-333-0630).
5. SEE REPORT APPENDIX 3 FOR DETAILED LOGS WITH DESCRIPTIONS.
6. CROSS SECTIONS PROVIDED BY TDOT ON SEPTEMBER 03, 2014.

STATE OF TENNESSEE
DEPARTMENT OF TRANSPORTATION

AMEC FOSTER WHEELER,
ENVIRONMENT & INFRASTRUCTURE, INC.
3800 EZELL ROAD
SUITE 100
NASHVILLE, TENNESSEE 37211

INDUSTRIAL ACCESS ROAD SERVING CLARKRANGE BUSINESS PARK

GEOTECHNICAL NOTES

GEOTECHNICAL STUDY

$FILES$

| TYPE | YEAR | PROJECT NO. | SHEET NO. |
|---|---|---|---|
| CONST. | 2015 | 25945-3477-04 | 14A |

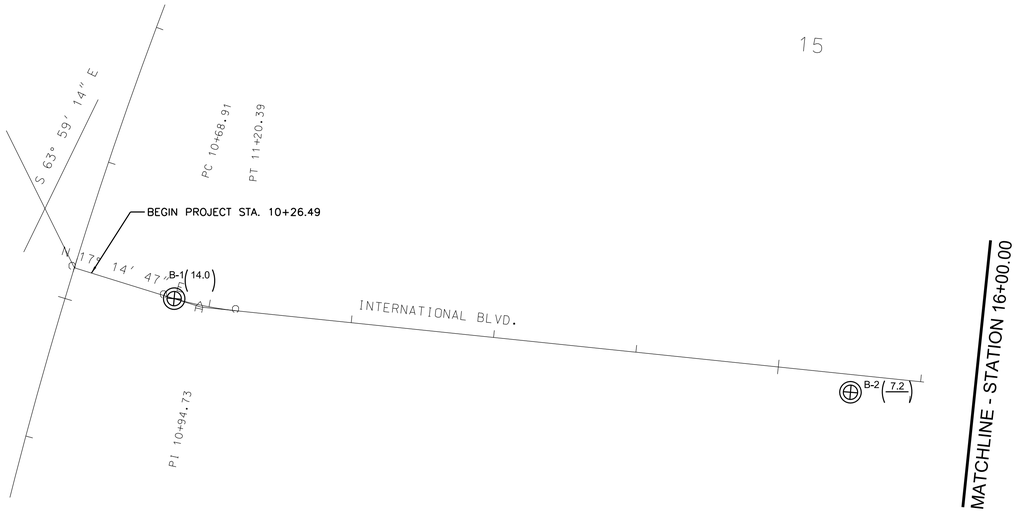


| Boring No. | Station | Offset (ft) | Boring Depth (ft) | Sample No. | Soil Description |
|---|---|---|---|---|---|
| B-1 | 10+73 | CL | 0.0 - 1.0 | GV | A |
| | | | 1.0 - 2.5 | CLY | A |
| | | | 2.5 - 12.5 | 1 | A |
| | | | 12.5 - 14 | DS | A |
| B-2 | 15+50 | R 12 | 0.0 - 3.0 | SR | A |
| | | | 3.0 - 7.2 | 1 | A |

| Sample No. | Sample Location | Sample Description | Sample Natural Moisture Content (%) | Proctor | | | | Atterberg Limits | | | Classification | |
|---|---|---|---|---|---|---|---|---|---|---|---|---|
| | | | | Maximum Dry Density | Optimum Moisture | Moisture Range | CBR Value | LL | PL | PI | AASHTO | USCS |
| 1 | B-24 | Sand, silty, reddish-brown | 14.8 | 119.6 | 11.5 | 9.5-15.2 | 5.3 | NV | NP | NP | A-4(0) | SM |
| 2 | B-1 | Sand, clayey, reddish-brown | N/A | 115.4 | 14.4 | 8.5-16.8 | 4.1 | 30 | 16 | 14 | A-2-6 | SC |
| 3 | COMP1 (COMPOSITE OF B-6, B-7, B-17, & B-23) | Sand, clayey, reddish-brown | 20.6 | 122.0 | 11.8 | 9.0-14.5 | 20.3 | 21 | 13 | 8 | A-2-4 | SC |

0 50' 100' 150'

N

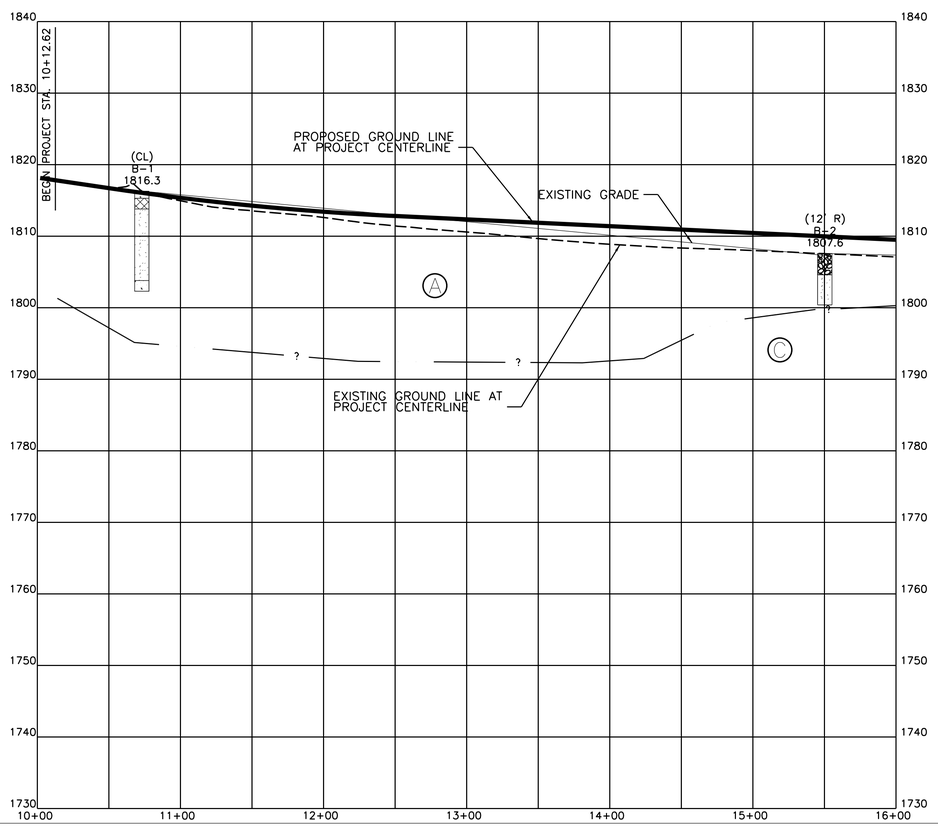


SOIL DESCRIPTIONS

- A — SOIL MATERIAL/FILL
- B — SOLID ROCK MATERIAL
- C — SOFT ROCK OR DEGRADABLE ROCK
- D — TRANSITIONAL MATERIAL

MATERIAL DESCRIPTION PATTERNS

- CLAYEY SOIL
- SANDY SOIL
- GRAVEL
- DECOMPOSED SANDSTONE
- SHOTROCK

— · · — ? — TOP OF ROCK (TYP.)

GENERAL NOTES (GEOTECHNICAL):

1. ROADWAY ALIGNMENT BASED ON DATA PROVIDED BY TDOT ON SEPTEMBER 03, 2014.
2. GROUNDLINE PROFILES BASED ON DATA PROVIDED BY TDOT ON SEPTEMBER 03, 2014.
3. BOREHOLE ELEVATIONS PROVIDED BY AMEC WHO USED EXISTING SURVEY BENCHMARKS AND ELEVATIONS ON SITE.
4. REPORT OF SUBSURFACE EXPLORATION AND GEOTECHNICAL ENGINEERING STUDY FOR PROPOSED ACCESS ALIGNMENT FOR CLARKRANGE REGIONAL BUSINESS PARK AMEC FILE NO. 5-6979-0002 AVAILABLE FROM AMEC ENVIRONMENT & INFRASTRUCTURE, INC. NASHVILLE, TENNESSEE (615-333-0630).
5. SEE REPORT APPENDIX 3 FOR DETAILED LOGS WITH DESCRIPTIONS.
6. SEE SHEET 14 FOR GEOTECH LEGEND.

# PROFILE

SCALE: 1"=50' HORIZ.
1"=10' VERT.

STATE OF TENNESSEE

DEPARTMENT OF TRANSPORTATION

AMEC FOSTER WHEELER,
ENVIRONMENT & INFRASTRUCTURE, INC.
3800 EZELL ROAD
SUITE 100
NASHVILLE, TENNESSEE 37211

INDUSTRIAL ACCESS ROAD SERVING CLARKRANGE BUSINESS PARK

PLAN AND PROFILE

BEGIN PROJ. TO STA. 16+00

$FILES$

| TYPE | YEAR | PROJECT NO. | SHEET NO. |
|---|---|---|---|
| CONST. | 2015 | 25945-3477-04 | 14B |

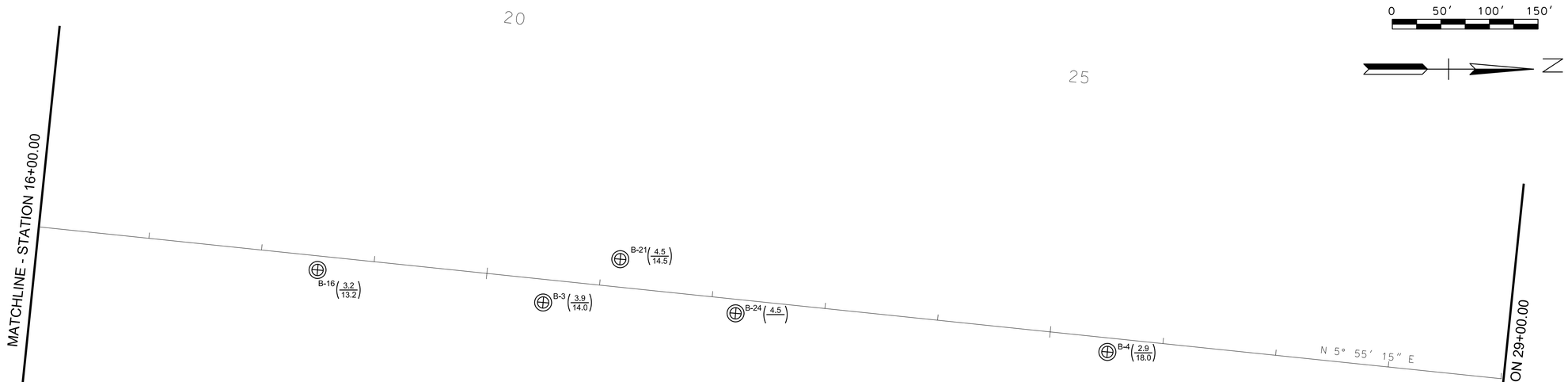


| Boring No. | Station | Offset (ft) | Boring Depth (ft) | Sample No. | Soil Description |
|---|---|---|---|---|---|
| B-16 | 18+49 | R 12 | 0.0 - 3.2 | SR | A |
| | | | 3.2 - 13.2 | WS | C |
| B-3 | 20+50 | R 20 | 0.0 - 1.0 | SR | A |
| | | | 1.0 - 3.0 | 1 | A |
| | | | 3.0 - 3.9 | WS | D |
| | | | 3.9 - 9.0 | DS | C |
| | | | 9.0 - 14.0 | WS | D |
| B-21 | 21+14 | L 25 | 0.0 - 1.0 | TS | A |
| | | | 1.0 - 3.5 | 1 | A |
| | | | 3.5 - 4.5 | WS | D |
| | | | 4.5 - 14.5 | SS | B |
| B-24 | 22+20 | R 12 | 0.0 - 4.5 | 1 | A |
| B-4 | 25+50 | R 12 | 0.0 - 0.3 | SR/GV | A |
| | | | 0.3 - 2.9 | WS | D |
| | | | 2.9 - 7.0 | WS/DS | D C |
| | | | 7.0 - 18.0 | SS | B |

| Sample No. | Sample Location | Sample Description | Sample Natural Moisture Content (%) | Proctor | | | | Atterberg Limits | | | Classification | |
|---|---|---|---|---|---|---|---|---|---|---|---|---|
| | | | | Maximum Dry Density | Optimum Moisture | Moisture Range | CBR Value | LL | PL | PI | AASHTO | USCS |
| 1 | B-24 | Sand, silty, reddish-brown | 14.8 | 119.6 | 11.5 | 9.5-15.2 | 5.3 | NV | NP | NP | A-4(0) | SM |
| 2 | B-1 | Sand, clayey, reddish-brown | N/A | 115.4 | 14.4 | 8.5-16.8 | 4.1 | 30 | 16 | 14 | A-2-6 | SC |
| 3 | COMP1 (COMPOSITE OF B-6, B-7, B-17, & B-23) | Sand, clayey, reddish-brown | 20.6 | 122.0 | 11.8 | 9.0-14.5 | 20.3 | 21 | 13 | 8 | A-2-4 | SC |

GENERAL NOTES (GEOTECHNICAL):

1. ROADWAY ALIGNMENT BASED ON DATA PROVIDED BY TDOT ON SEPTEMBER 03, 2014.
2. GROUNDLINE PROFILES BASED ON DATA PROVIDED BY TDOT ON SEPTEMBER 03, 2014.
3. BOREHOLE ELEVATIONS PROVIDED BY AMEC WHO USED EXISTING SURVEY BENCHMARKS AND ELEVATIONS ON SITE.
4. REPORT OF SUBSURFACE EXPLORATION AND GEOTECHNICAL ENGINEERING STUDY FOR PROPOSED ACCESS ALIGNMENT FOR CLARKRANGE REGIONAL BUSINESS PARK AMEC FILE NO. 5-6979-0002 AVAILABLE FROM AMEC ENVIRONMENT & INFRASTRUCTURE, INC. NASHVILLE, TENNESSEE (615-333-0630).
5. SEE REPORT APPENDIX 3 FOR DETAILED LOGS WITH DESCRIPTIONS.
6. SEE SHEET 14 FOR GEOTECH LEGEND.

SOIL DESCRIPTIONS

- A — SOIL MATERIAL/FILL
- B — SOLID ROCK MATERIAL
- C — SOFT ROCK OR DEGRADABLE ROCK
- D — TRANSITIONAL MATERIAL

MATERIAL DESCRIPTION PATTERNS

- TOPSOIL
- SANDY SOIL
- GRAVEL
- DECOMPOSED SANDSTONE
- WEATHERED SANDSTONE
- SANDSTONE
- SHOTROCK

—·—·—?— TOP OF ROCK (TYP.)

———?— TOP OF SOUND ROCK (TYP.)

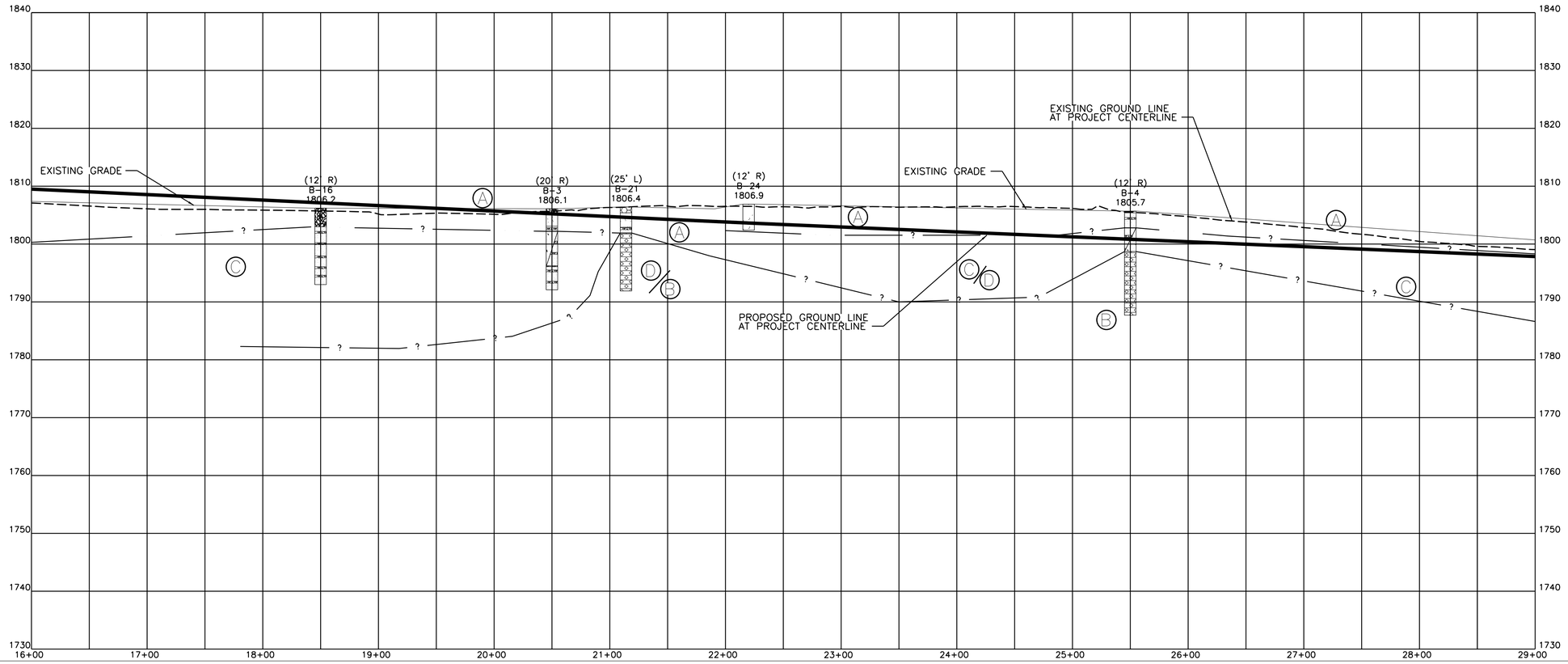


# PROFILE

SCALE: 1"=50' HORIZ.
1"=10' VERT.

STATE OF TENNESSEE
DEPARTMENT OF TRANSPORTATION

AMEC FOSTER WHEELER, ENVIRONMENT & INFRASTRUCTURE, INC.
3800 EZELL ROAD
SUITE 100
NASHVILLE, TENNESSEE 37211

INDUSTRIAL ACCESS ROAD SERVING CLARKRANGE BUSINESS PARK

## PLAN AND PROFILE

STA. 16+00 TO STA. 29+00

$FILES$

| TYPE | YEAR | PROJECT NO. | SHEET NO. |
|---|---|---|---|
| CONST. | 2015 | 25945-3477-04 | 14C |

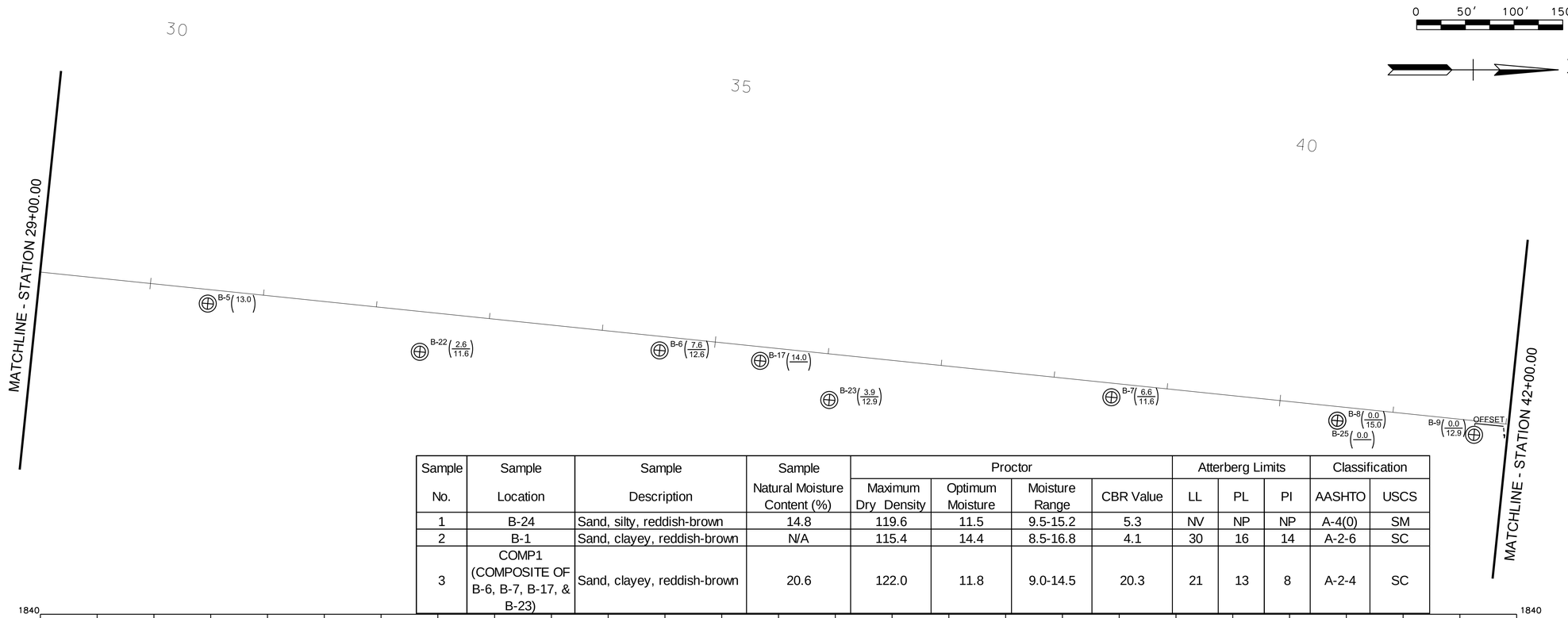


| Sample No. | Sample Location | Sample Description | Sample Natural Moisture Content (%) | Proctor | | | | Atterberg Limits | | | Classification | |
|---|---|---|---|---|---|---|---|---|---|---|---|---|
| | | | | Maximum Dry Density | Optimum Moisture | Moisture Range | CBR Value | LL | PL | PI | AASHTO | USCS |
| 1 | B-24 | Sand, silty, reddish-brown | 14.8 | 119.6 | 11.5 | 9.5-15.2 | 5.3 | NV | NP | NP | A-4(0) | SM |
| 2 | B-1 | Sand, clayey, reddish-brown | N/A | 115.4 | 14.4 | 8.5-16.8 | 4.1 | 30 | 16 | 14 | A-2-6 | SC |
| 3 | COMP1 (COMPOSITE OF B-6, B-7, B-17, & B-23) | Sand, clayey, reddish-brown | 20.6 | 122.0 | 11.8 | 9.0-14.5 | 20.3 | 21 | 13 | 8 | A-2-4 | SC |

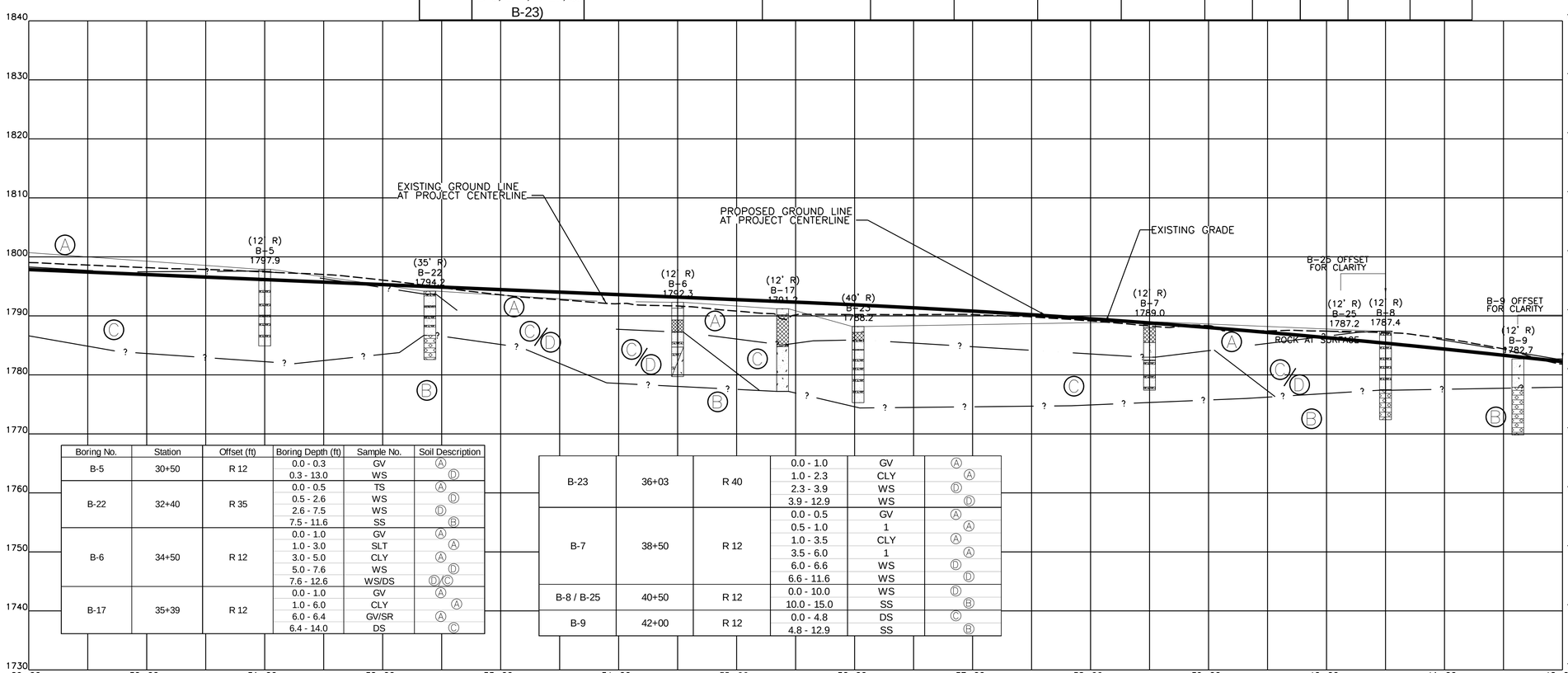


| Boring No. | Station | Offset (ft) | Boring Depth (ft) | Sample No. | Soil Description |
|---|---|---|---|---|---|
| B-5 | 30+50 | R 12 | 0.0 - 0.3 | GV | A |
| | | | 0.3 - 13.0 | WS | D |
| B-22 | 32+40 | R 35 | 0.0 - 0.5 | TS | A |
| | | | 0.5 - 2.6 | WS | D |
| | | | 2.6 - 7.5 | WS | D |
| | | | 7.5 - 11.6 | SS | B |
| B-6 | 34+50 | R 12 | 0.0 - 1.0 | GV | A |
| | | | 1.0 - 3.0 | SLT | A |
| | | | 3.0 - 5.0 | CLY | A |
| | | | 5.0 - 7.6 | WS | D |
| | | | 7.6 - 12.6 | WS/DS | D/C |
| B-17 | 35+39 | R 12 | 0.0 - 1.0 | GV | A |
| | | | 1.0 - 6.0 | CLY | A |
| | | | 6.0 - 6.4 | GV/SR | A |
| | | | 6.4 - 14.0 | DS | C |
| B-23 | 36+03 | R 40 | 0.0 - 1.0 | GV | A |
| | | | 1.0 - 2.3 | CLY | A |
| | | | 2.3 - 3.9 | WS | D |
| | | | 3.9 - 12.9 | WS | D |
| B-7 | 38+50 | R 12 | 0.0 - 0.5 | GV | A |
| | | | 0.5 - 1.0 | 1 | A |
| | | | 1.0 - 3.5 | CLY | A |
| | | | 3.5 - 6.0 | 1 | A |
| | | | 6.0 - 6.6 | WS | D |
| | | | 6.6 - 11.6 | WS | D |
| B-8 / B-25 | 40+50 | R 12 | 0.0 - 10.0 | WS | D |
| | | | 10.0 - 15.0 | SS | B |
| B-9 | 42+00 | R 12 | 0.0 - 4.8 | DS | C |
| | | | 4.8 - 12.9 | SS | B |

GENERAL NOTES (GEOTECHNICAL):

1. ROADWAY ALIGNMENT BASED ON DATA PROVIDED BY TDOT ON SEPTEMBER 03, 2014.
2. GROUNDLINE PROFILES BASED ON DATA PROVIDED BY TDOT ON SEPTEMBER 03, 2014.
3. BOREHOLE ELEVATIONS PROVIDED BY AMEC WHO USED EXISTING SURVEY BENCHMARKS AND ELEVATIONS ON SITE.
4. REPORT OF SUBSURFACE EXPLORATION AND GEOTECHNICAL ENGINEERING STUDY FOR PROPOSED ACCESS ALIGNMENT FOR CLARKRANGE REGIONAL BUSINESS PARK AMEC FILE NO. 5-6979-0002 AVAILABLE FROM AMEC ENVIRONMENT & INFRASTRUCTURE, INC. NASHVILLE, TENNESSEE (615-333-0630).
5. SEE REPORT APPENDIX 3 FOR DETAILED LOGS WITH DESCRIPTIONS.
6. SEE SHEET 14 FOR GEOTECH LEGEND.

SOIL DESCRIPTIONS

- (A) — SOIL MATERIAL/FILL
- (B) — SOLID ROCK MATERIAL
- (C) — SOFT ROCK OR DEGRADABLE ROCK
- (D) — TRANSITIONAL MATERIAL

MATERIAL DESCRIPTION PATTERNS

- TOPSOIL
- CLAYEY SOIL
- SILTY SOIL
- SANDY SOIL
- GRAVEL
- DECOMPOSED SANDSTONE
- WEATHERED SANDSTONE
- SANDSTONE
- SHOTROCK

—·—·— ? — TOP OF ROCK (TYP.)

——— ? — TOP OF SOUND ROCK (TYP.)

# PROFILE

SCALE: 1"=50' HORIZ.
1"=10' VERT.

STATE OF TENNESSEE

DEPARTMENT OF TRANSPORTATION

AMEC FOSTER WHEELER
ENVIRONMENT & INFRASTRUCTURE, INC.
3800 EZELL ROAD
SUITE 100
NASHVILLE, TENNESSEE 37211

INDUSTRIAL ACCESS ROAD SERVING CLARKRANGE BUSINESS PARK

## PLAN AND PROFILE

STA. 29+00 TO STA. 42+00

| TYPE | YEAR | PROJECT NO. | SHEET NO. |
|---|---|---|---|
| CONST. | 2015 | 25945-3477-04 | 14D |

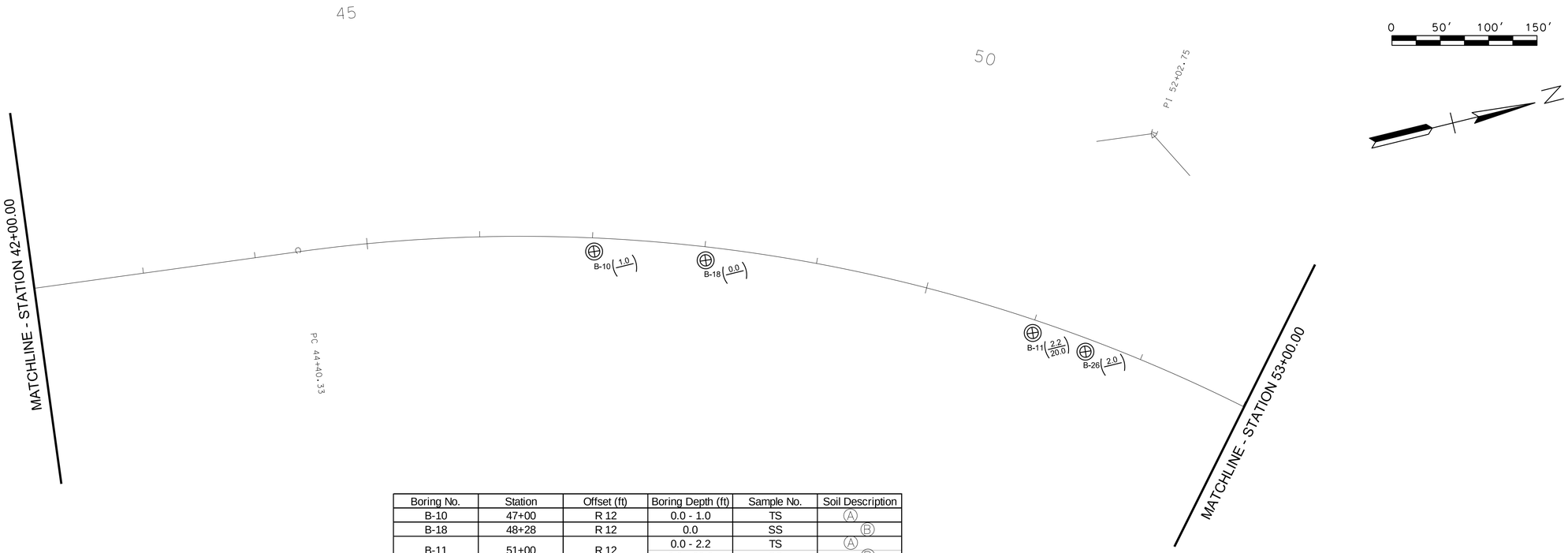


| Boring No. | Station | Offset (ft) | Boring Depth (ft) | Sample No. | Soil Description |
|---|---|---|---|---|---|
| B-10 | 47+00 | R 12 | 0.0 - 1.0 | TS | A |
| B-18 | 48+28 | R 12 | 0.0 | SS | B |
| B-11 | 51+00 | R 12 | 0.0 - 2.2 | TS | A |
| | | | 2.2 - 20.0 | SS | B |
| B-26 | 51+50 | R 12 | 0.0 - 1.0 | TS | A |
| | | | 1.0 - 2.5 | 1 | A |

| Sample No. | Sample Location | Sample Description | Sample Natural Moisture Content (%) | Proctor Maximum Dry Density | Proctor Optimum Moisture | Proctor Moisture Range | Proctor CBR Value | Atterberg Limits LL | Atterberg Limits PL | Atterberg Limits PI | Classification AASHTO | Classification USCS |
|---|---|---|---|---|---|---|---|---|---|---|---|---|
| 1 | B-24 | Sand, silty, reddish-brown | 14.8 | 119.6 | 11.5 | 9.5-15.2 | 5.3 | NV | NP | NP | A-4(0) | SM |
| 2 | B-1 | Sand, clayey, reddish-brown | N/A | 115.4 | 14.4 | 8.5-16.8 | 4.1 | 30 | 16 | 14 | A-2-6 | SC |
| 3 | COMP1 (COMPOSITE OF B-6, B-7, B-17, & B-23) | Sand, clayey, reddish-brown | 20.6 | 122.0 | 11.8 | 9.0-14.5 | 20.3 | 21 | 13 | 8 | A-2-4 | SC |

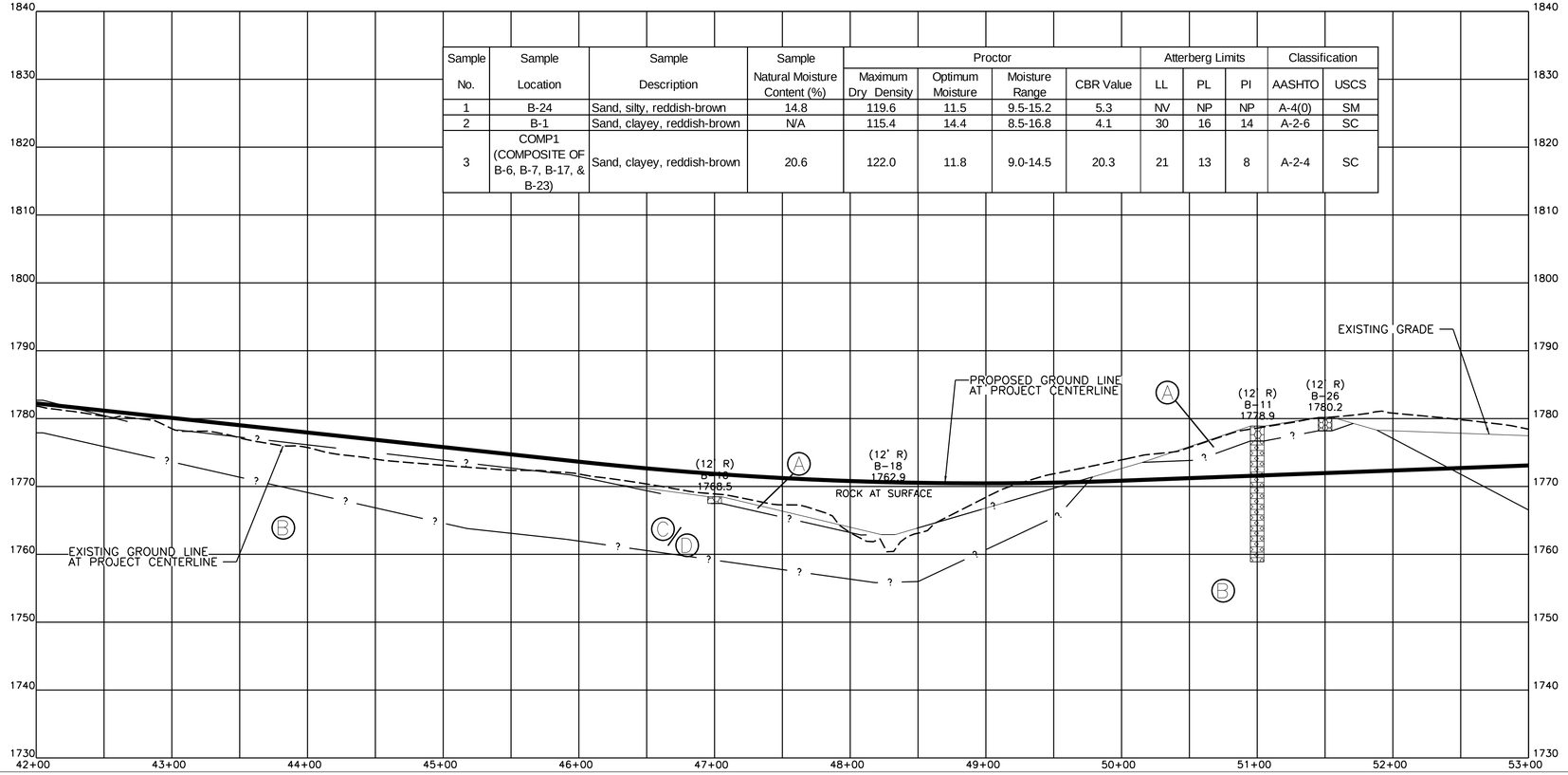


SOIL DESCRIPTIONS

- A — SOIL MATERIAL/FILL
- B — SOLID ROCK MATERIAL
- C — SOFT ROCK OR DEGRADABLE ROCK
- D — TRANSITIONAL MATERIAL

MATERIAL DESCRIPTION PATTERNS

- TOPSOIL
- DECOMPOSED SANDSTONE
- SANDSTONE
- ? — TOP OF ROCK (TYP.)
- ? — TOP OF SOUND ROCK (TYP.)

GENERAL NOTES (GEOTECHNICAL):

1. ROADWAY ALIGNMENT BASED ON DATA PROVIDED BY TDOT ON SEPTEMBER 03, 2014.
2. GROUNDLINE PROFILES BASED ON DATA PROVIDED BY TDOT ON SEPTEMBER 03, 2014.
3. BOREHOLE ELEVATIONS PROVIDED BY AMEC WHO USED EXISTING SURVEY BENCHMARKS AND ELEVATIONS ON SITE.
4. REPORT OF SUBSURFACE EXPLORATION AND GEOTECHNICAL ENGINEERING STUDY FOR PROPOSED ACCESS ALIGNMENT FOR CLARKRANGE REGIONAL BUSINESS PARK AMEC FILE NO. 5-6979-0002 AVAILABLE FROM AMEC ENVIRONMENT & INFRASTRUCTURE, INC. NASHVILLE, TENNESSEE (615-333-0630).
5. SEE REPORT APPENDIX 3 FOR DETAILED LOGS WITH DESCRIPTIONS.
6. SEE SHEET 14 FOR GEOTECH LEGEND.

# PROFILE

SCALE: 1"=50' HORIZ.
1"=10' VERT.

STATE OF TENNESSEE

DEPARTMENT OF TRANSPORTATION

AMEC FOSTER WHEELER
ENVIRONMENT & INFRASTRUCTURE, INC.
3800 EZELL ROAD
SUITE 100
NASHVILLE, TENNESSEE 37211

INDUSTRIAL ACCESS ROAD SERVING CLARKRANGE BUSINESS PARK

## PLAN AND PROFILE

STA. 42+00 TO STA. 53+00

$FILES$

| TYPE | YEAR | PROJECT NO. | SHEET NO. |
|---|---|---|---|
| CONST. | 2015 | 25945-3477-04 | 14E |

0 50' 100' 150'

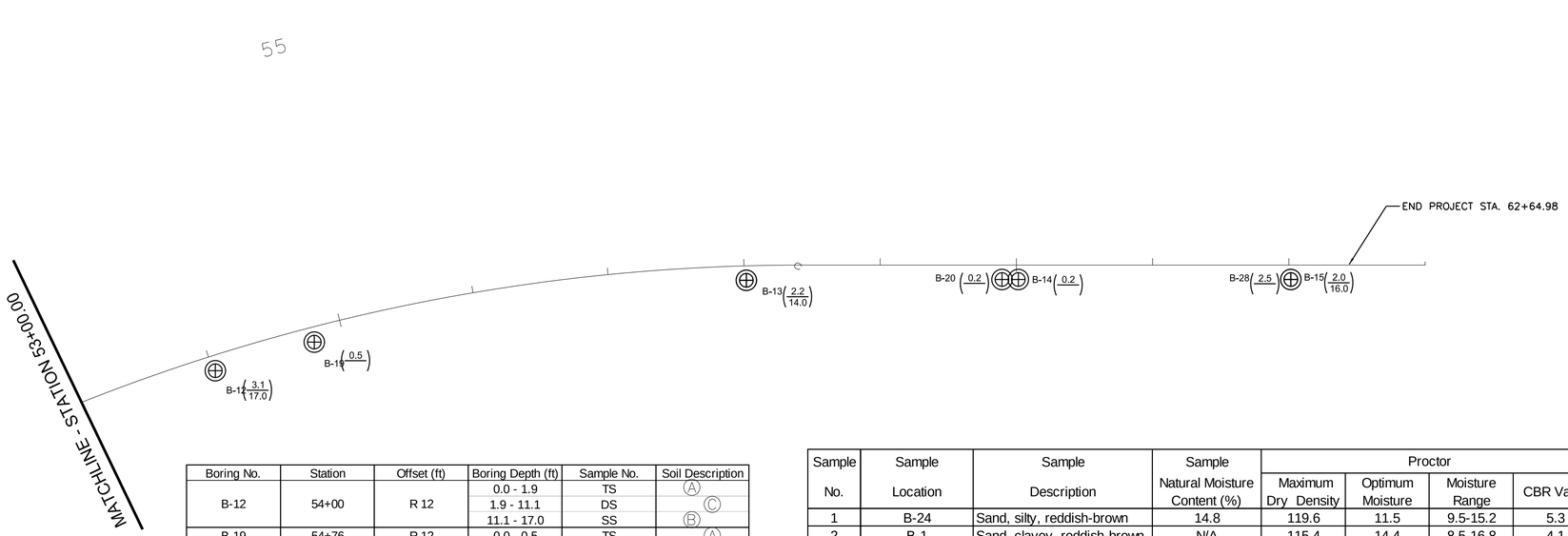


| Boring No. | Station | Offset (ft) | Boring Depth (ft) | Sample No. | Soil Description |
|---|---|---|---|---|---|
| B-12 | 54+00 | R 12 | 0.0 - 1.9 | TS | A |
| | | | 1.9 - 11.1 | DS | C |
| | | | 11.1 - 17.0 | SS | B |
| B-19 | 54+76 | R 12 | 0.0 - 0.5 | TS | A |
| B-13/B-27 | 58+00 | R 12 | 0.0 - 2.2 | TS | A |
| | | | 2.2 - 14.0 | SS | B |
| B-20 | 59+88 | R 12 | 0.0 - 0.2 | TS | A |
| B-14 | 60+00 | R 12 | 0.0 - 0.2 | TS | A |
| B-15/B-28 | 62+00 | R 12 | 0.0 - 2.2 | TS | A |
| | | | 2.2 - 16.0 | SS | B |

| Sample No. | Sample Location | Sample Description | Sample Natural Moisture Content (%) | Proctor | | | | Atterberg Limits | | | Classification | |
|---|---|---|---|---|---|---|---|---|---|---|---|---|
| | | | | Maximum Dry Density | Optimum Moisture | Moisture Range | CBR Value | LL | PL | PI | AASHTO | USCS |
| 1 | B-24 | Sand, silty, reddish-brown | 14.8 | 119.6 | 11.5 | 9.5-15.2 | 5.3 | NV | NP | NP | A-4(0) | SM |
| 2 | B-1 | Sand, clayey, reddish-brown | N/A | 115.4 | 14.4 | 8.5-16.8 | 4.1 | 30 | 16 | 14 | A-2-6 | SC |
| 3 | COMP1 (COMPOSITE OF B-6, B-7, B-17, & B-23) | Sand, clayey, reddish-brown | 20.6 | 122.0 | 11.8 | 9.0-14.5 | 20.3 | 21 | 13 | 8 | A-2-4 | SC |

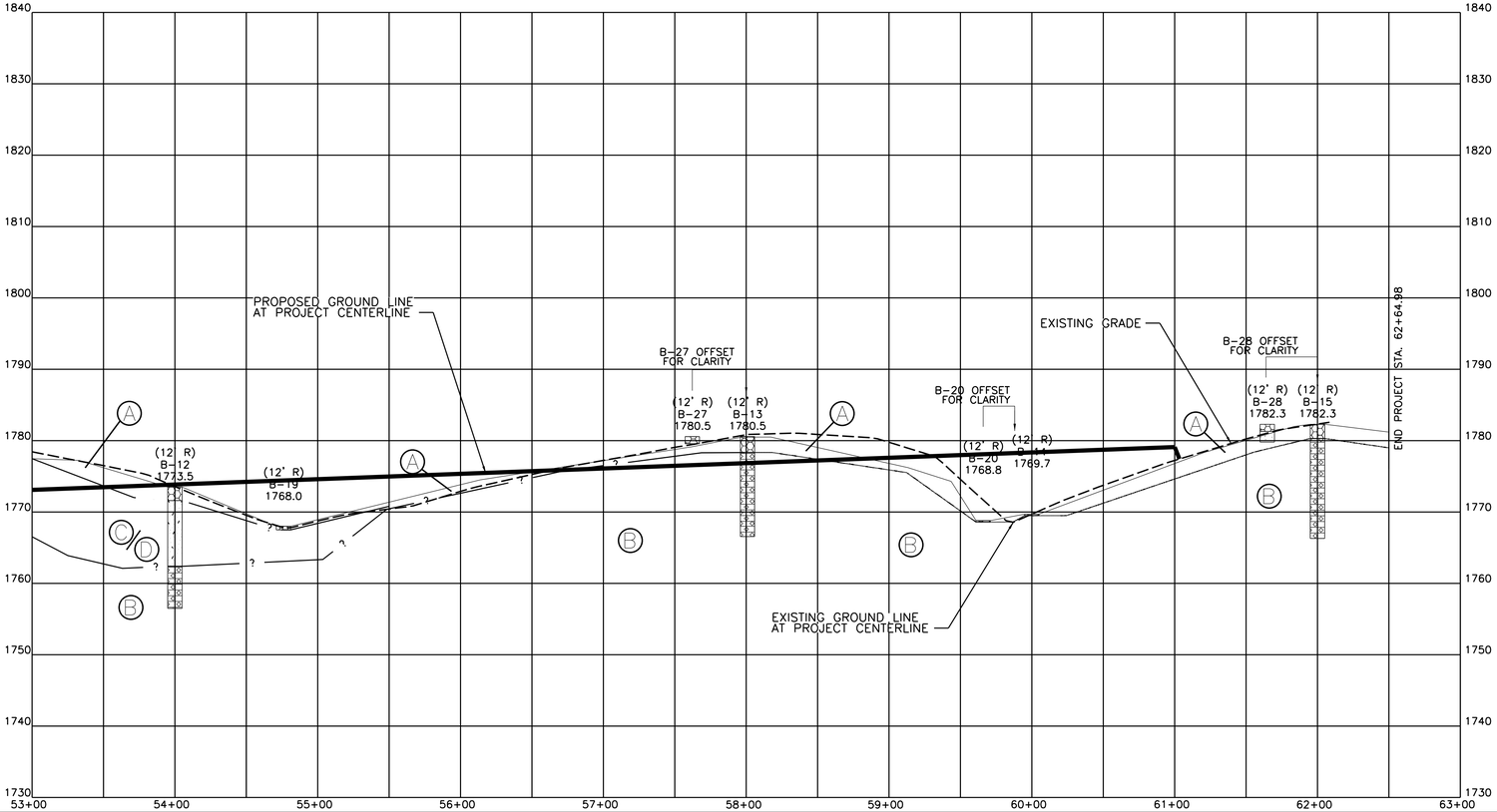


SOIL DESCRIPTIONS

- A — SOIL MATERIAL/FILL
- B — SOLID ROCK MATERIAL
- C — SOFT ROCK OR DEGRADABLE ROCK
- D — TRANSITIONAL MATERIAL

MATERIAL DESCRIPTION PATTERNS

- TOPSOIL
- SANDY SOIL
- DECOMPOSED SANDSTONE
- SANDSTONE

? — TOP OF ROCK (TYP.)

? — TOP OF SOUND ROCK (TYP.)

GENERAL NOTES (GEOTECHNICAL):

1. ROADWAY ALIGNMENT BASED ON DATA PROVIDED BY TDOT ON SEPTEMBER 03, 2014.
2. GROUNDLINE PROFILES BASED ON DATA PROVIDED BY TDOT ON SEPTEMBER 03, 2014.
3. BOREHOLE ELEVATIONS PROVIDED BY AMEC WHO USED EXISTING SURVEY BENCHMARKS AND ELEVATIONS ON SITE.
4. REPORT OF SUBSURFACE EXPLORATION AND GEOTECHNICAL ENGINEERING STUDY FOR PROPOSED ACCESS ALIGNMENT FOR CLARKRANGE REGIONAL BUSINESS PARK AMEC FILE NO. 5-6979-0002 AVAILABLE FROM AMEC ENVIRONMENT & INFRASTRUCTURE, INC. NASHVILLE, TENNESSEE (615-333-0630).
5. SEE REPORT APPENDIX 3 FOR DETAILED LOGS WITH DESCRIPTIONS.
6. SEE SHEET 14 FOR GEOTECH LEGEND.

# PROFILE

SCALE: 1"=50' HORIZ.
1"=10' VERT.

STATE OF TENNESSEE

DEPARTMENT OF TRANSPORTATION

AMEC FOSTER WHEELER,
ENVIRONMENT & INFRASTRUCTURE, INC.
3800 EZELL ROAD
SUITE 100
NASHVILLE, TENNESSEE 37211

INDUSTRIAL ACCESS ROAD SERVING CLARKRANGE BUSINESS PARK

PLAN AND PROFILE

STA. 53+00 TO END PROJ.

$FILES$

| TYPE | YEAR | PROJECT NO. | SHEET NO. |
|---|---|---|---|
| CONST. | 2015 | 25945-3477-04 | 14F |

## INTERNATIONAL BLVD TYPICAL CUT AND FILL SECTIONS

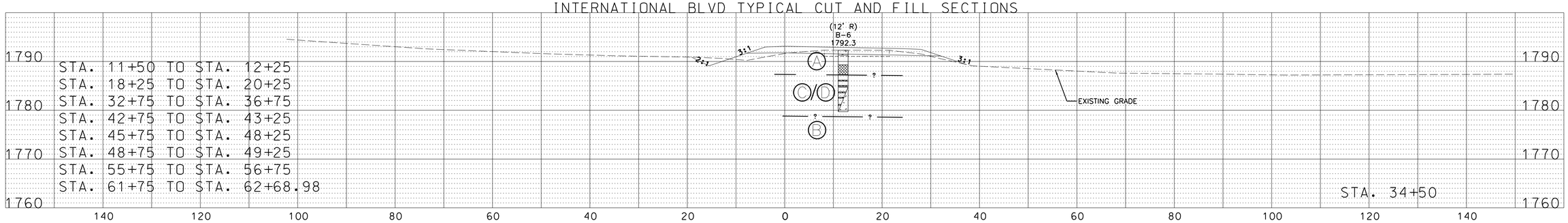


## INTERNATIONAL BLVD TYPICAL SOIL AND ROCK CUT (LESS THAN 5') SECTION

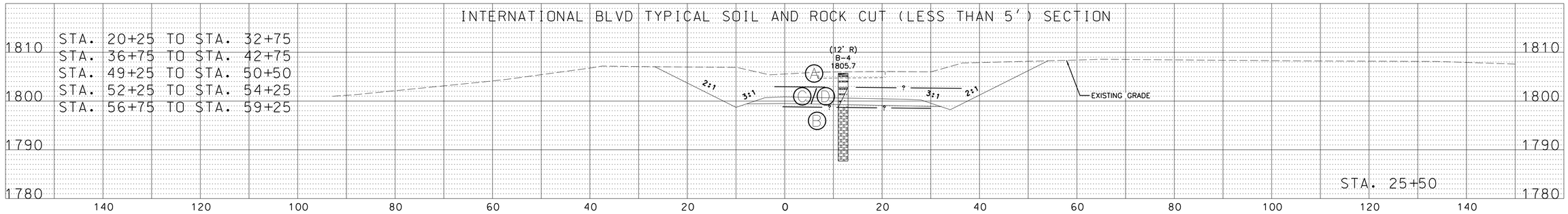


## INTERNATIONAL BLVD TYPICAL CUT AND FILL DIVIDED ROAD
## STA. 10+26.49 TO STA. 11+50.00

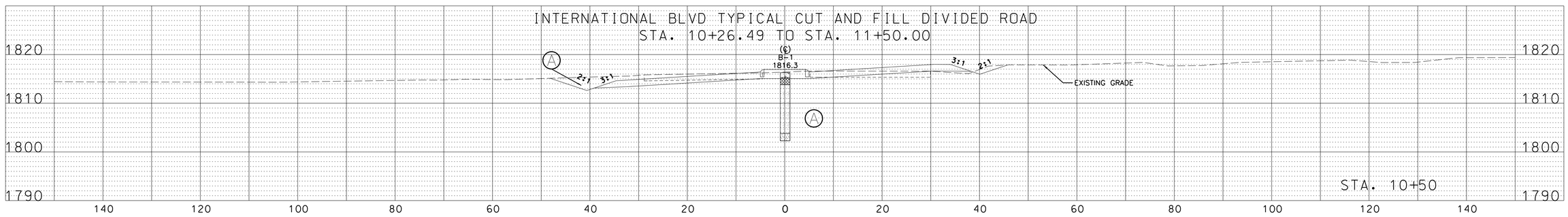


GENERAL NOTES (GEOTECHNICAL):

1. BOREHOLE ELEVATIONS PROVIDED BY AMEC WHO USED EXISTING SURVEY BENCHMARKS AND ELEVATIONS ON SITE.
2. REPORT OF SUBSURFACE EXPLORATION AND GEOTECHNICAL ENGENEERING STUDY FOR PROPOSED ACCESS ALIGNMENT FOR CLARKRANGE REGIONAL BUSINESS PARK; FILE NO. 5-6979-0002 AVAILABLE FROM AMEC FOSTER WHEELER, ENVIRONMENT & INFRASTRUCTURE, INC. NASHVILLE, TENNESSEE (615-333-0630).
3. SEE REPORT APPENDIX 3 FOR DETAILED LOGS WITH DESCRIPTIONS.
4. CROSS SECTIONS PROVIDED BY TDOT ON SEPTEMBER 03, 2014.
5. SEE SHEET 14 FOR GEOTECH LEGEND.

SOIL DESCRIPTIONS

- (A) — SOIL MATERIAL/FILL
- (B) — SOLID ROCK MATERIAL
- (C) — SOFT ROCK OR DEGRADABLE ROCK
- (D) — TRANSITIONAL MATERIAL

MATERIAL DESCRIPTION PATTERNS

- CLAYEY SOIL
- SILTY SOIL
- SANDY SOIL
- GRAVEL
- DECOMPOSED SANDSTONE
- WEATHERED SANDSTONE
- SANDSTONE
- SHOTROCK

—·—·—? — TOP OF ROCK (TYP.)

———? — TOP OF SOUND ROCK (TYP.)

STATE OF TENNESSEE

DEPARTMENT OF TRANSPORTATION

AMEC FOSTER WHEELER
ENVIRONMENT & INFRASTRUCTURE
3800 EZELL ROAD
SUITE 100
NASHVILLE, TENNESSEE 37211

INDUSTRIAL ACCESS ROAD SERVING CLARKRANGE BUSINESS PARK

# TYPICAL CROSS SECTIONS

**GEOTECHNICAL STUDY**

$FILES$

| TYPE | YEAR | PROJECT NO. | SHEET NO. |
|---|---|---|---|
| CONST. | 2015 | 25945-3477-04 | 14G |

## INTERNATIONAL BLVD TYPICAL ROCK CUT SECTION
## STA. 50+50 TO STA. 52+25

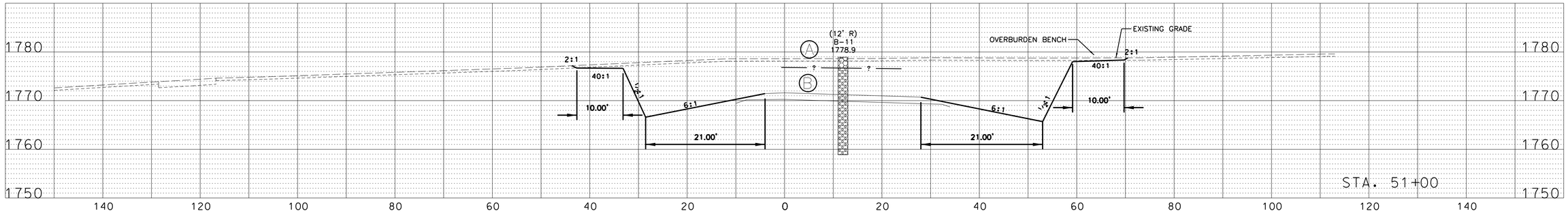


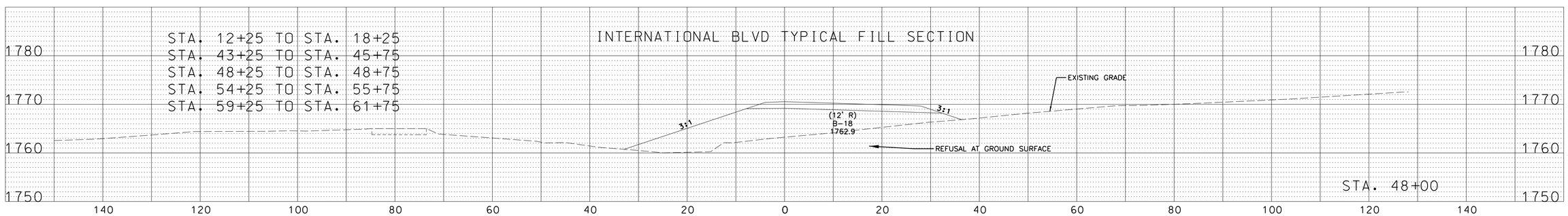


GENERAL NOTES (GEOTECHNICAL):

1. BOREHOLE ELEVATIONS PROVIDED BY AMEC WHO USED EXISTING SURVEY BENCHMARKS AND ELEVATIONS ON SITE.
2. REPORT OF SUBSURFACE EXPLORATION AND GEOTECHNICAL ENGENEERING STUDY FOR PROPOSED ACCESS ALIGNMENT FOR CLARKRANGE REGIONAL BUSINESS PARK; FILE NO. 5-6979-0002 AVAILABLE FROM AMEC FOSTER WHEELER, ENVIRONMENT & INFRASTRUCTURE, INC. NASHVILLE, TENNESSEE (615-333-0630).
3. SEE REPORT APPENDIX 3 FOR DETAILED LOGS WITH DESCRIPTIONS.
4. CROSS SECTIONS PROVIDED BY TDOT ON SEPTEMBER 03, 2014.
5. SEE SHEET 14 FOR GEOTECH LEGEND.

SOIL DESCRIPTIONS

- A — SOIL MATERIAL/FILL
- B — SOLID ROCK MATERIAL
- C — SOFT ROCK OR DEGRADABLE ROCK
- D — TRANSITIONAL MATERIAL

MATERIAL DESCRIPTION PATTERNS

- TOPSOIL
- SANDSTONE
- ? ? TOP OF SOUND ROCK (TYP.)

STATE OF TENNESSEE

DEPARTMENT OF TRANSPORTATION

AMEC FOSTER WHEELER
ENVIRONMENT & INFRASTRUCTURE
3600 EZELL ROAD
SUITE 100
NASHVILLE, TENNESSEE 37211

INDUSTRIAL ACCESS ROAD SERVING CLARKRANGE BUSINESS PARK

# TYPICAL CROSS SECTIONS

GEOTECHNICAL STUDY

$FILE$

| TYPE | YEAR | PROJECT NO. | SHEET NO. |
|---|---|---|---|
| R.O.W. | 2014 | 25945-2477-04 | 13 |
| CONST. | 2015 | 25945-3477-04 | 15 |

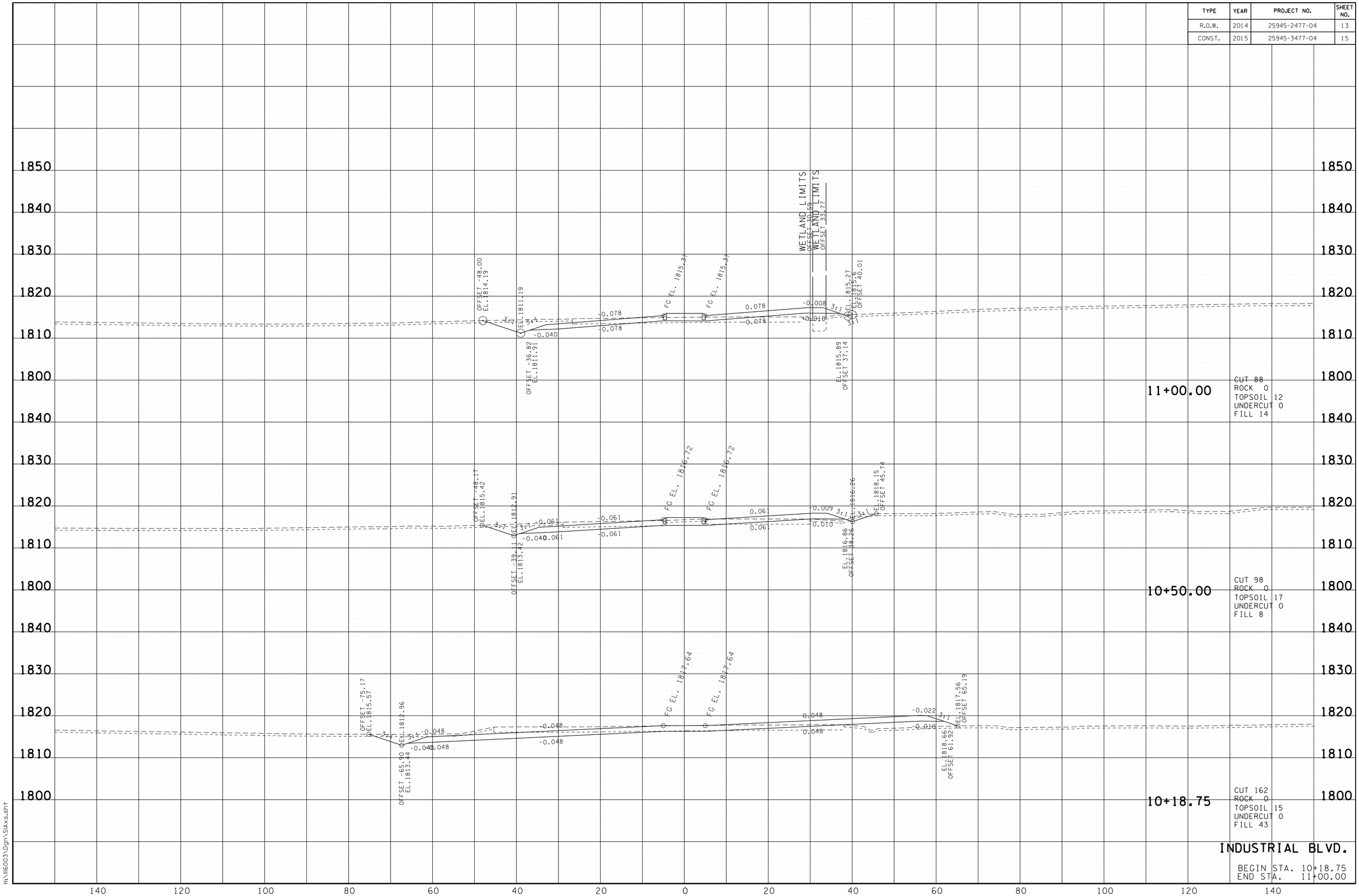


2/9/2015 1:12:58 PM
H:\11600 3\Dgn\SIAxs.sht

| TYPE | YEAR | PROJECT NO. | SHEET NO. |
|---|---|---|---|
| R.O.W. | 2014 | 25945-2477-04 | 14 |
| CONST. | 2015 | 25945-3477-04 | 16 |

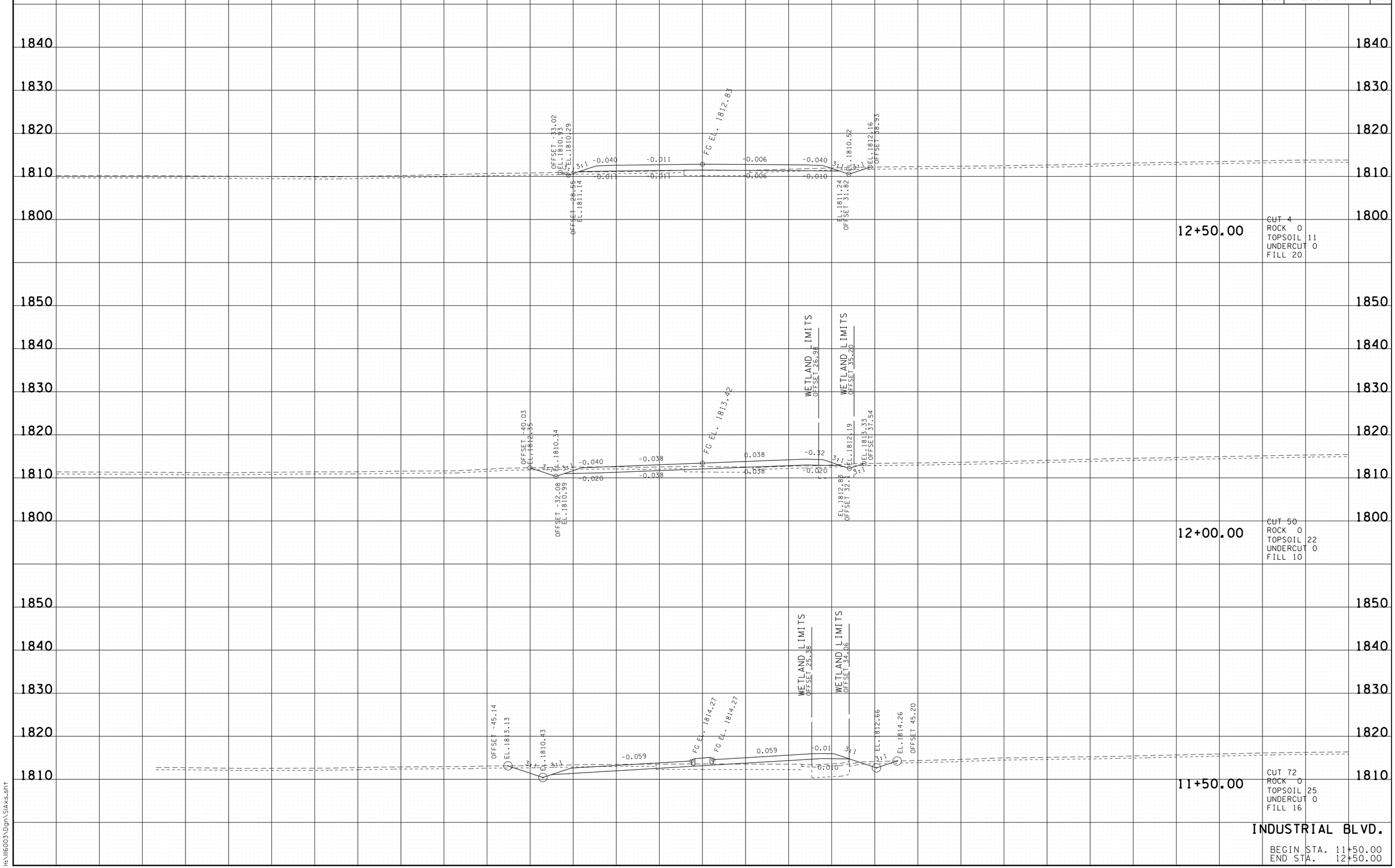


2/9/2015 1:12:59 PM
H:\116003\Dgn\SIAxs.sht

| TYPE | YEAR | PROJECT NO. | SHEET NO. |
|---|---|---|---|
| R.O.W. | 2014 | 25945-2477-04 | 15 |
| CONST. | 2015 | 25945-3477-04 | 17 |

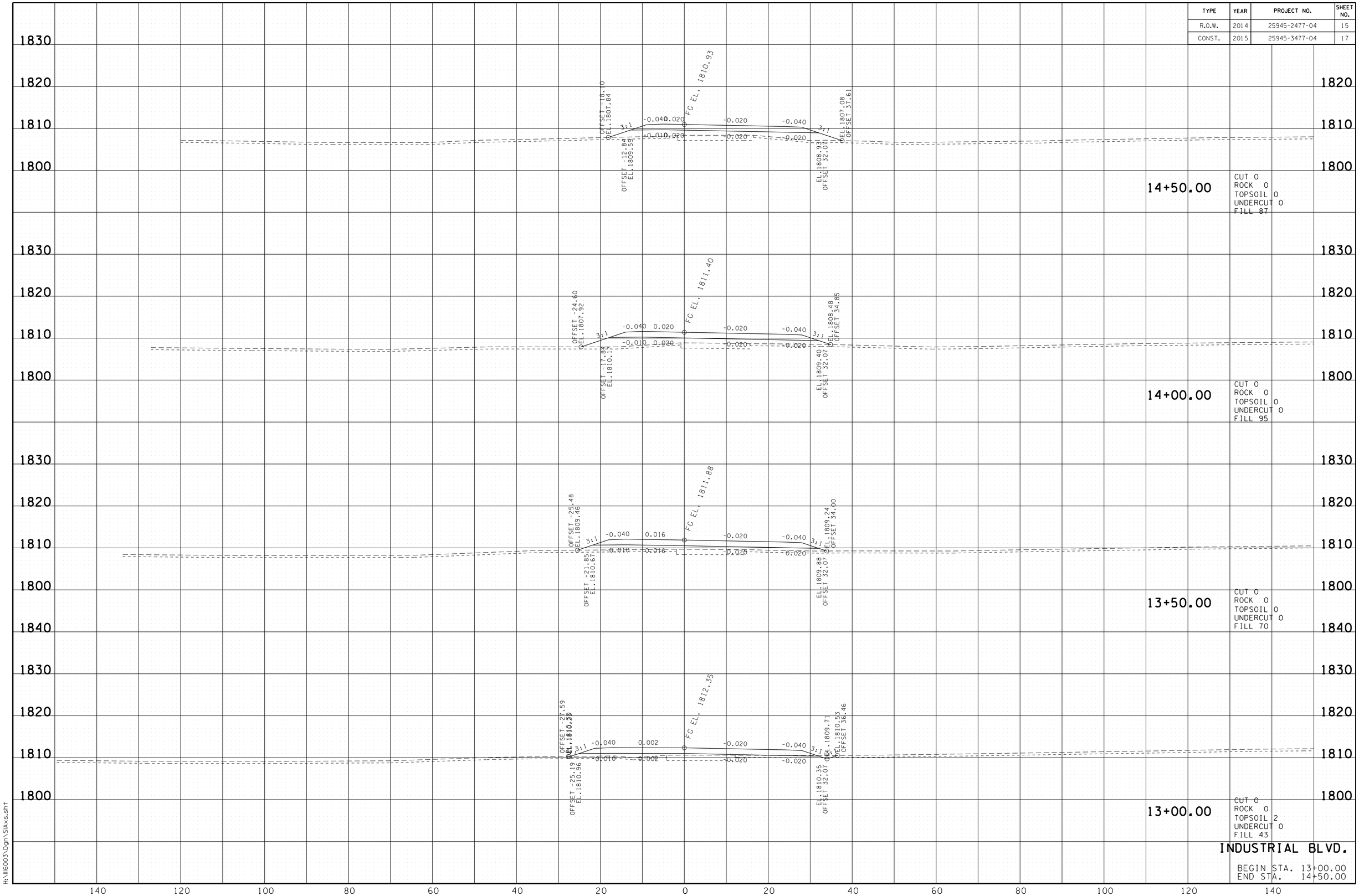


INDUSTRIAL BLVD.

BEGIN STA. 13+00.00
END STA. 14+50.00

2/9/2015 1:31:01 PM
H:\116003\Dgn\SIAxs.sht

| TYPE | YEAR | PROJECT NO. | SHEET NO. |
|---|---|---|---|
| R.O.W. | 2014 | 25945-2477-04 | 16 |
| CONST. | 2015 | 25945-3477-04 | 18 |

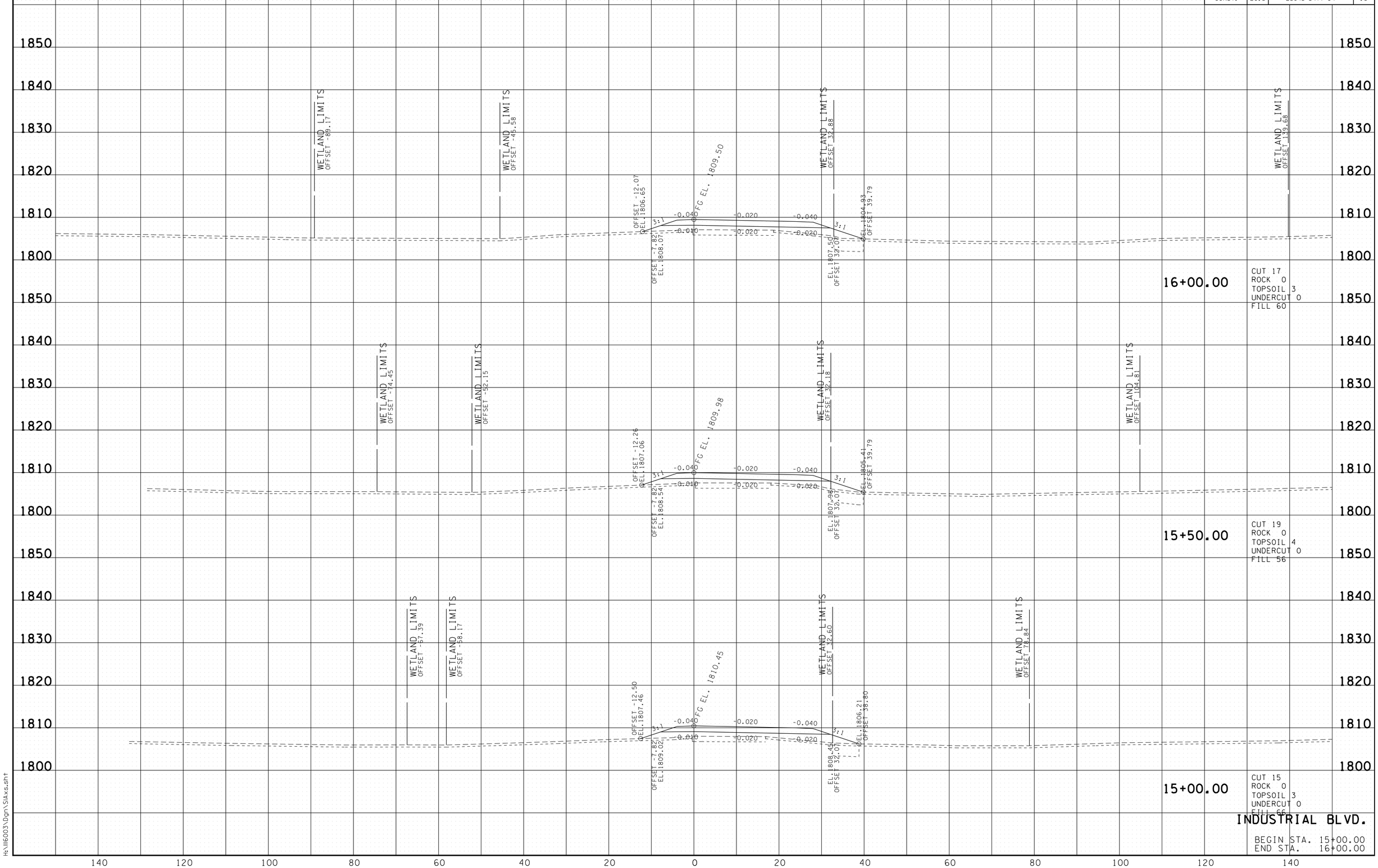


INDUSTRIAL BLVD.

BEGIN STA. 15+00.00
END STA. 16+00.00

2/9/2015 11:32 PM
H:\116003\Dgn\SIAxs.sht

| TYPE | YEAR | PROJECT NO. | SHEET NO. |
|---|---|---|---|
| R.O.W. | 2014 | 25945-2477-04 | 17 |
| CONST. | 2015 | 25945-3477-04 | 19 |

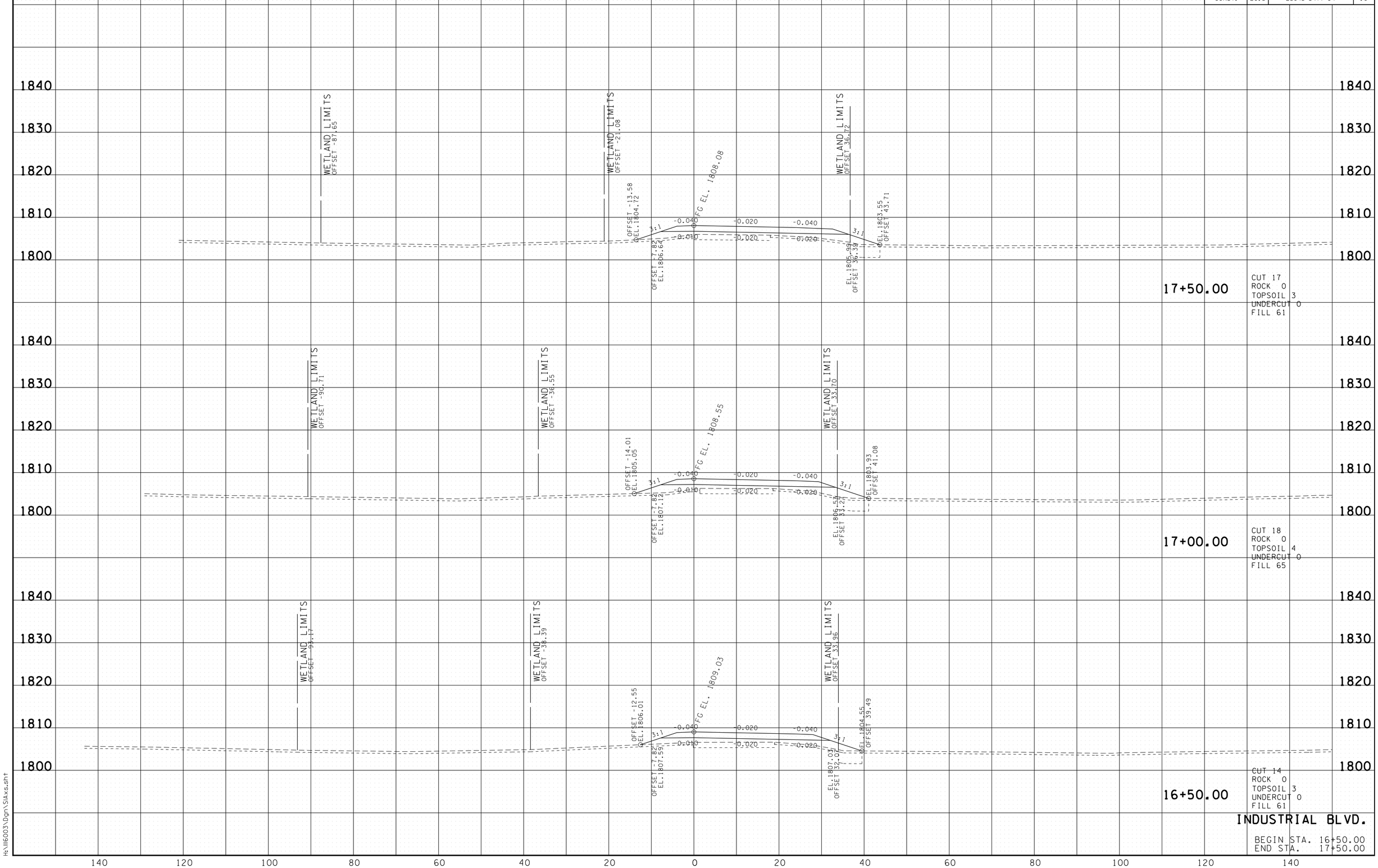


INDUSTRIAL BLVD.

BEGIN STA. 16+50.00
END STA. 17+50.00

2/9/2015 1:13:03 PM
H:\116003\Dgn\S14x5.sht

| TYPE | YEAR | PROJECT NO. | SHEET NO. |
|---|---|---|---|
| R.O.W. | 2014 | 25945-2477-04 | 18 |
| CONST. | 2015 | 25945-3477-04 | 20 |

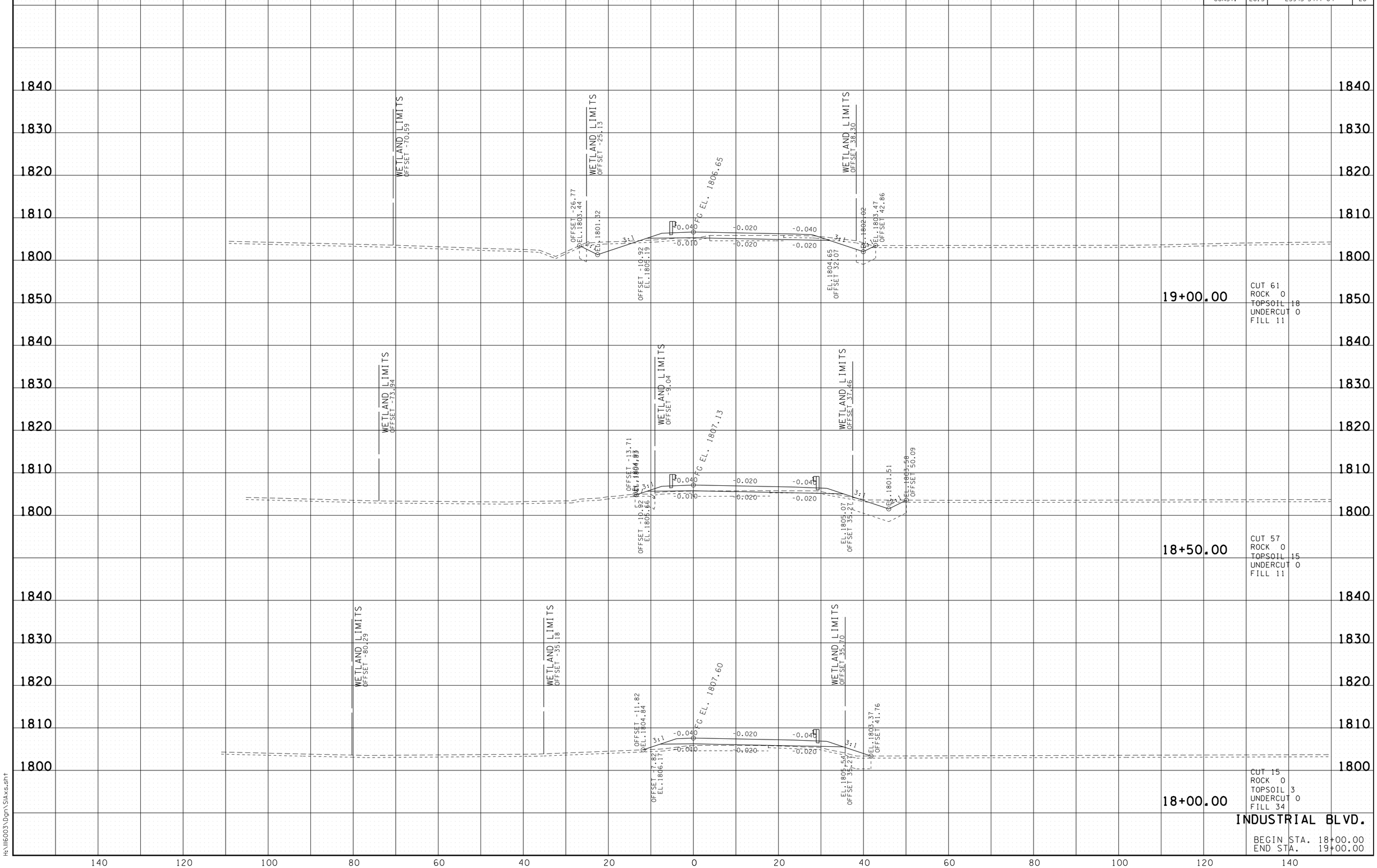


2/9/2015 1:43:04 PM
H:\11603\Dgn\SIAxs.sht

| TYPE | YEAR | PROJECT NO. | SHEET NO. |
|---|---|---|---|
| R.O.W. | 2014 | 25945-2477-04 | 19 |
| CONST. | 2015 | 25945-3477-04 | 21 |

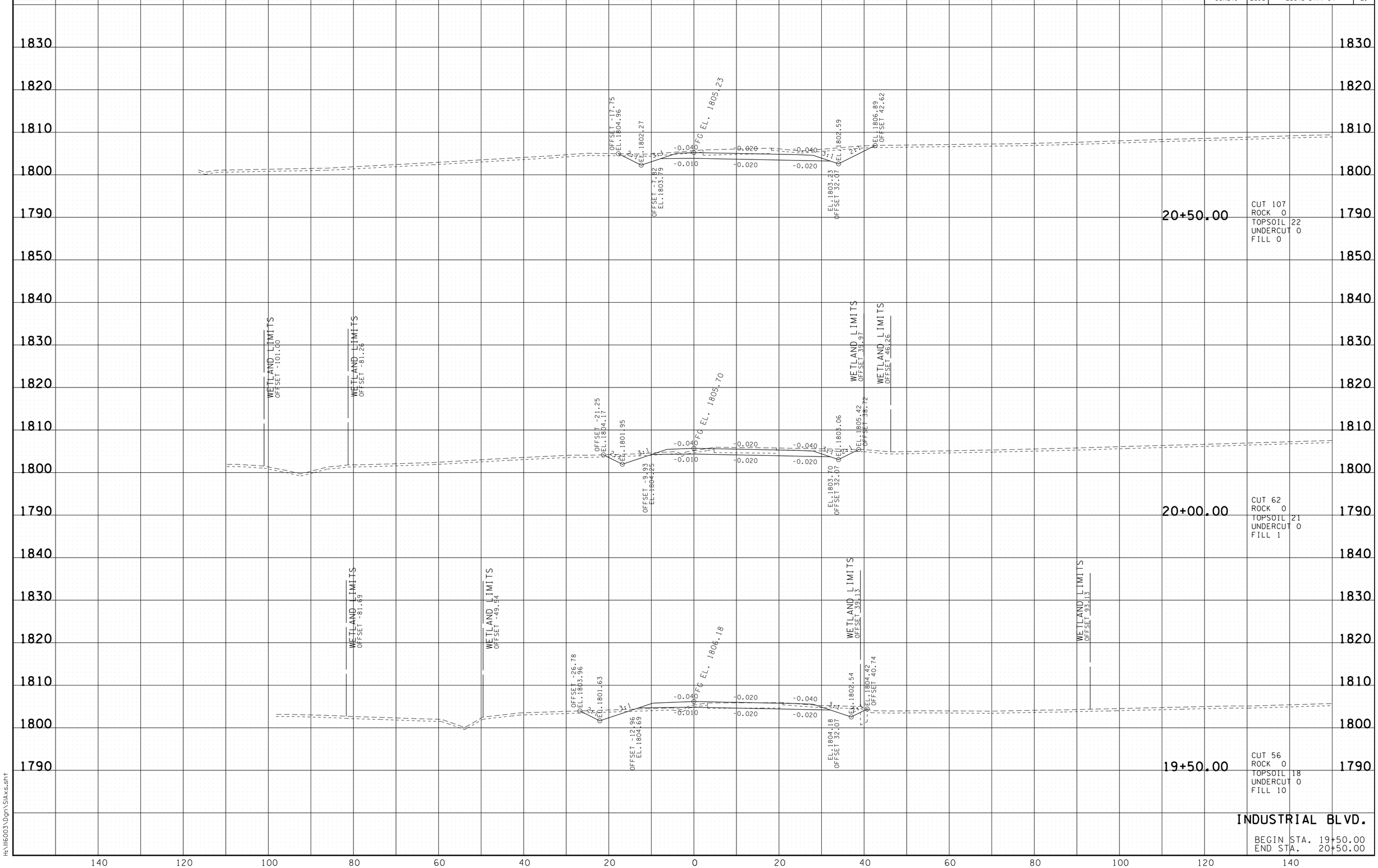


2/9/2015 1:35:06 PM
H:\116003\Dgn\SIAxs.sht

| TYPE | YEAR | PROJECT NO. | SHEET NO. |
|---|---|---|---|
| R.O.W. | 2014 | 25945-2477-04 | 20 |
| CONST. | 2015 | 25945-3477-04 | 22 |

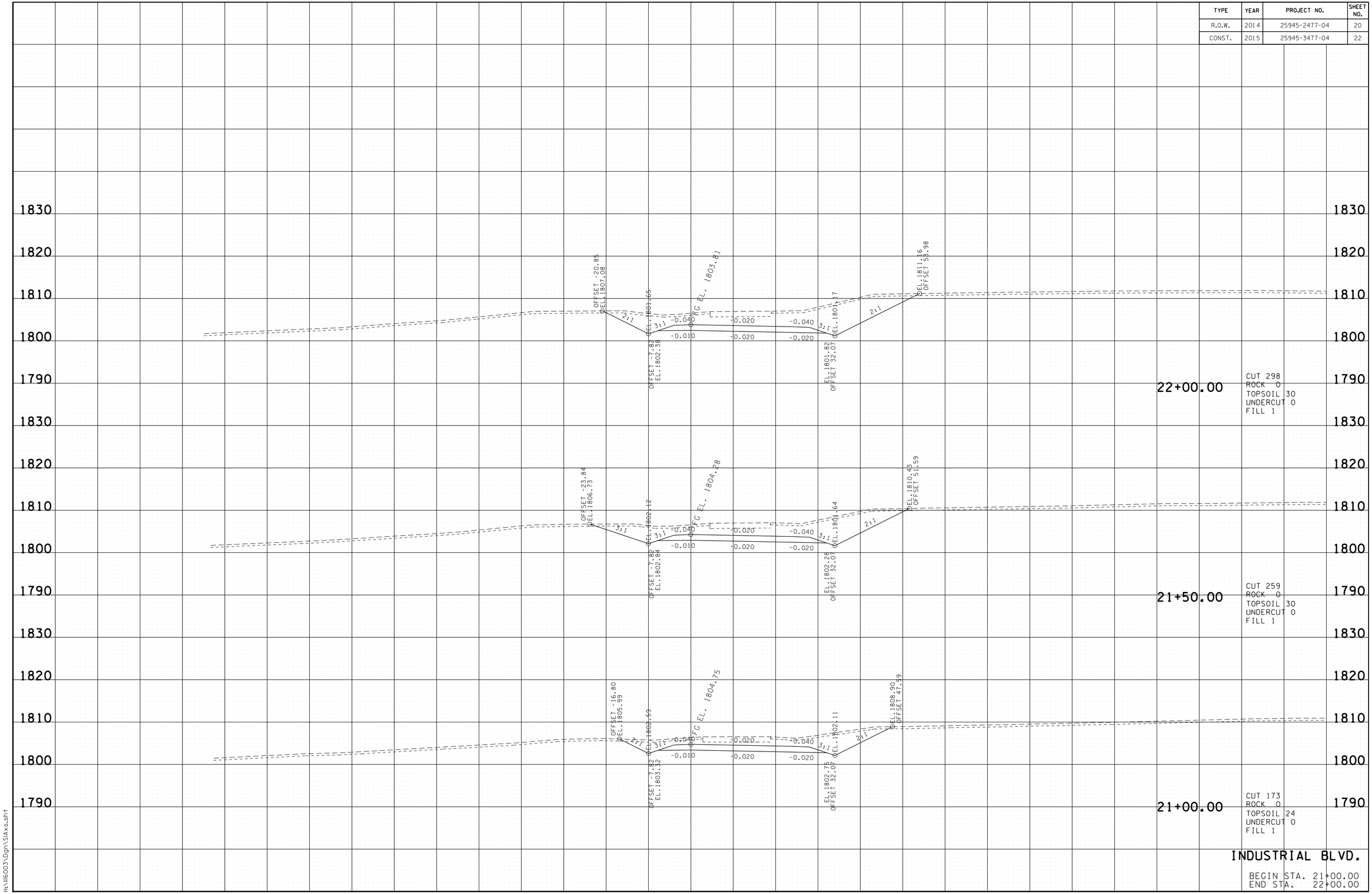


2/9/2015 1:43:07 PM
H:\1116003\Dgn\SIAxs.sht

| TYPE | YEAR | PROJECT NO. | SHEET NO. |
|---|---|---|---|
| R.O.W. | 2014 | 25945-2477-04 | 21 |
| CONST. | 2015 | 25945-3477-04 | 23 |

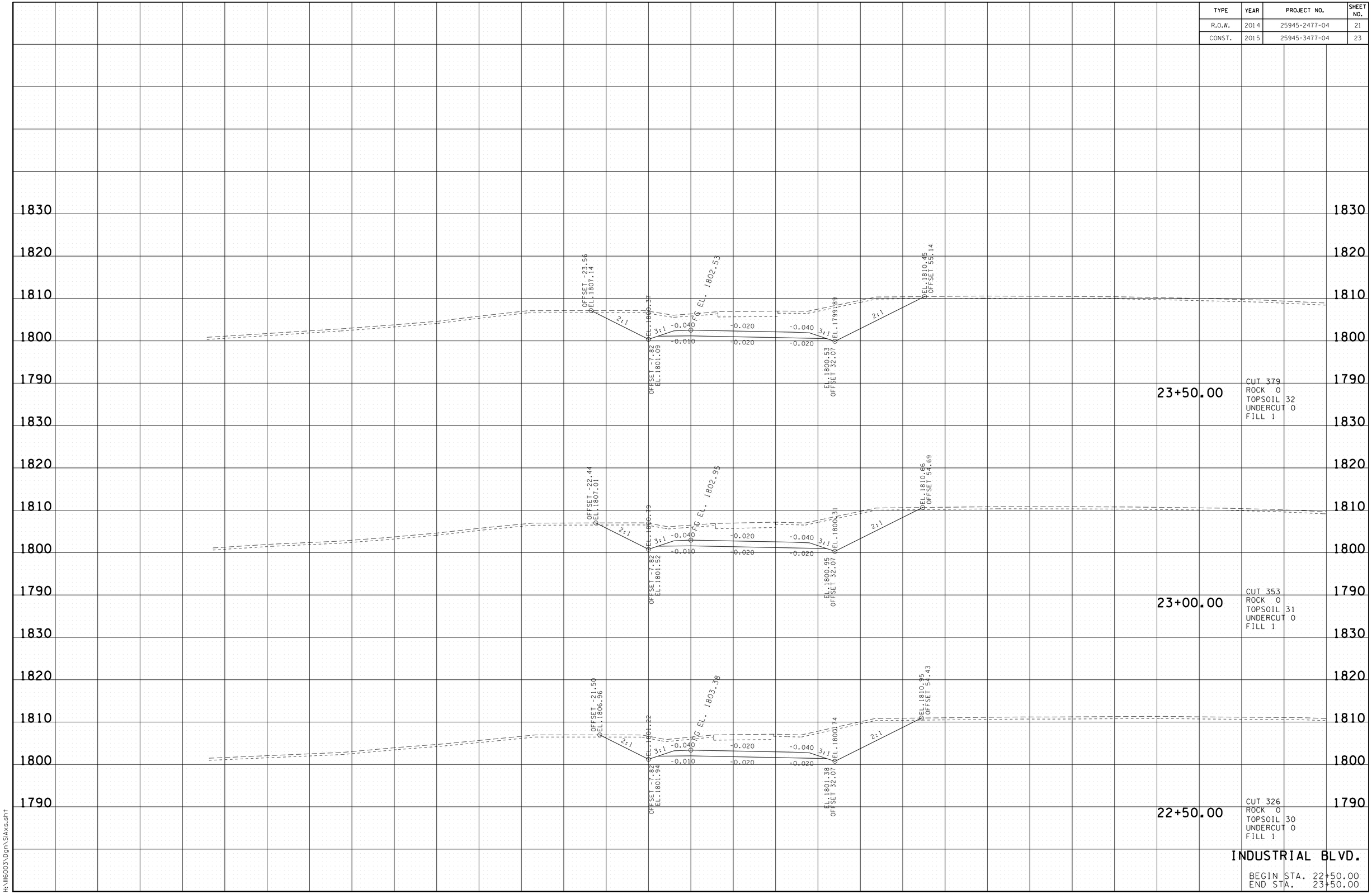


2/9/2015 1:43:08 PM
H:\116003\Dgn\SIAxs.sht

| TYPE | YEAR | PROJECT NO. | SHEET NO. |
|---|---|---|---|
| R.O.W. | 2014 | 25945-2477-04 | 22 |
| CONST. | 2015 | 25945-3477-04 | 24 |

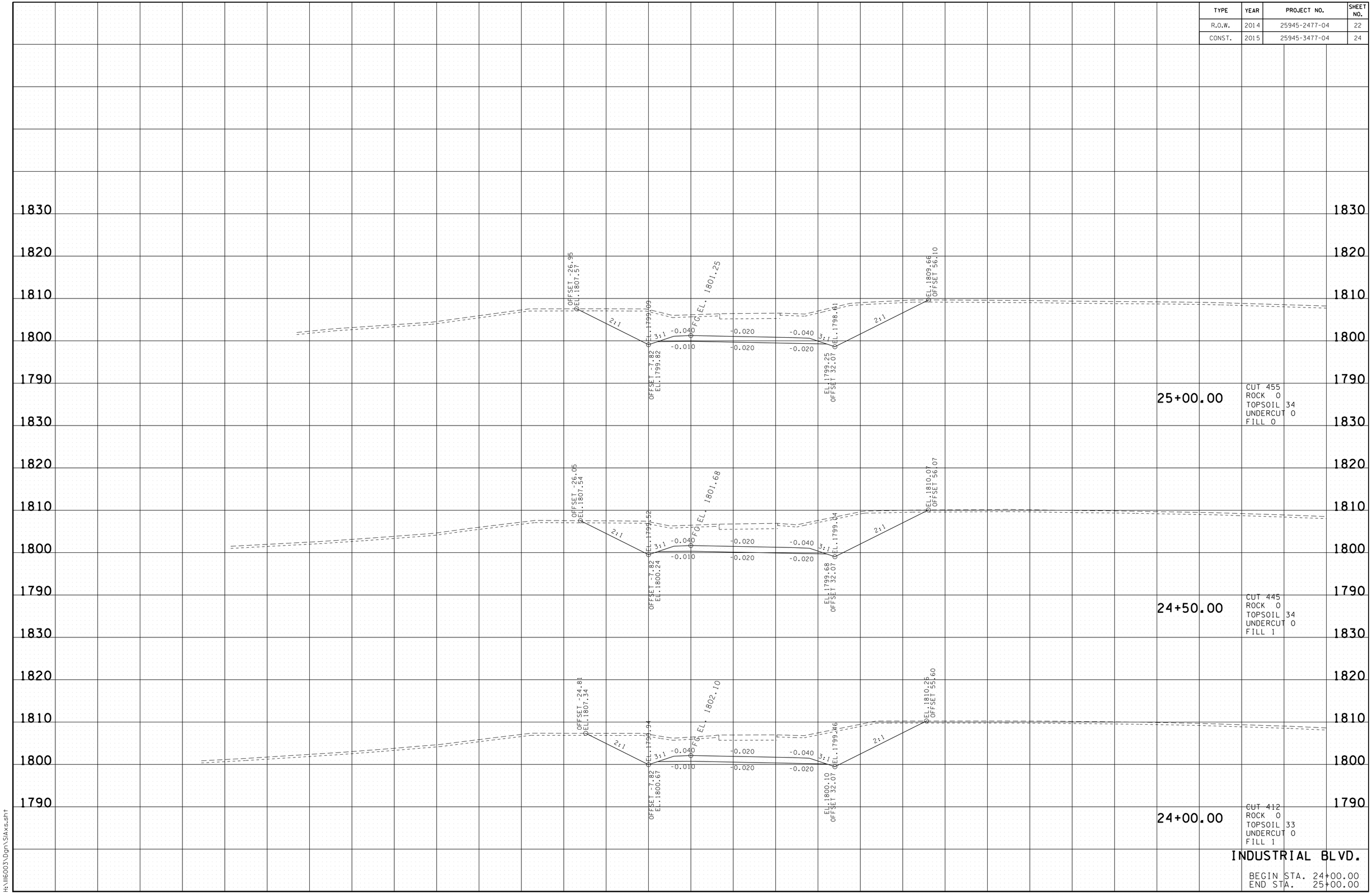


INDUSTRIAL BLVD.

BEGIN STA. 24+00.00
END STA. 25+00.00

2/9/2015 1:43:09 PM
H:\116003\Dgn\SIAxs.sht

| TYPE | YEAR | PROJECT NO. | SHEET NO. |
|---|---|---|---|
| R.O.W. | 2014 | 25945-2477-04 | 23 |
| CONST. | 2015 | 25945-3477-04 | 25 |

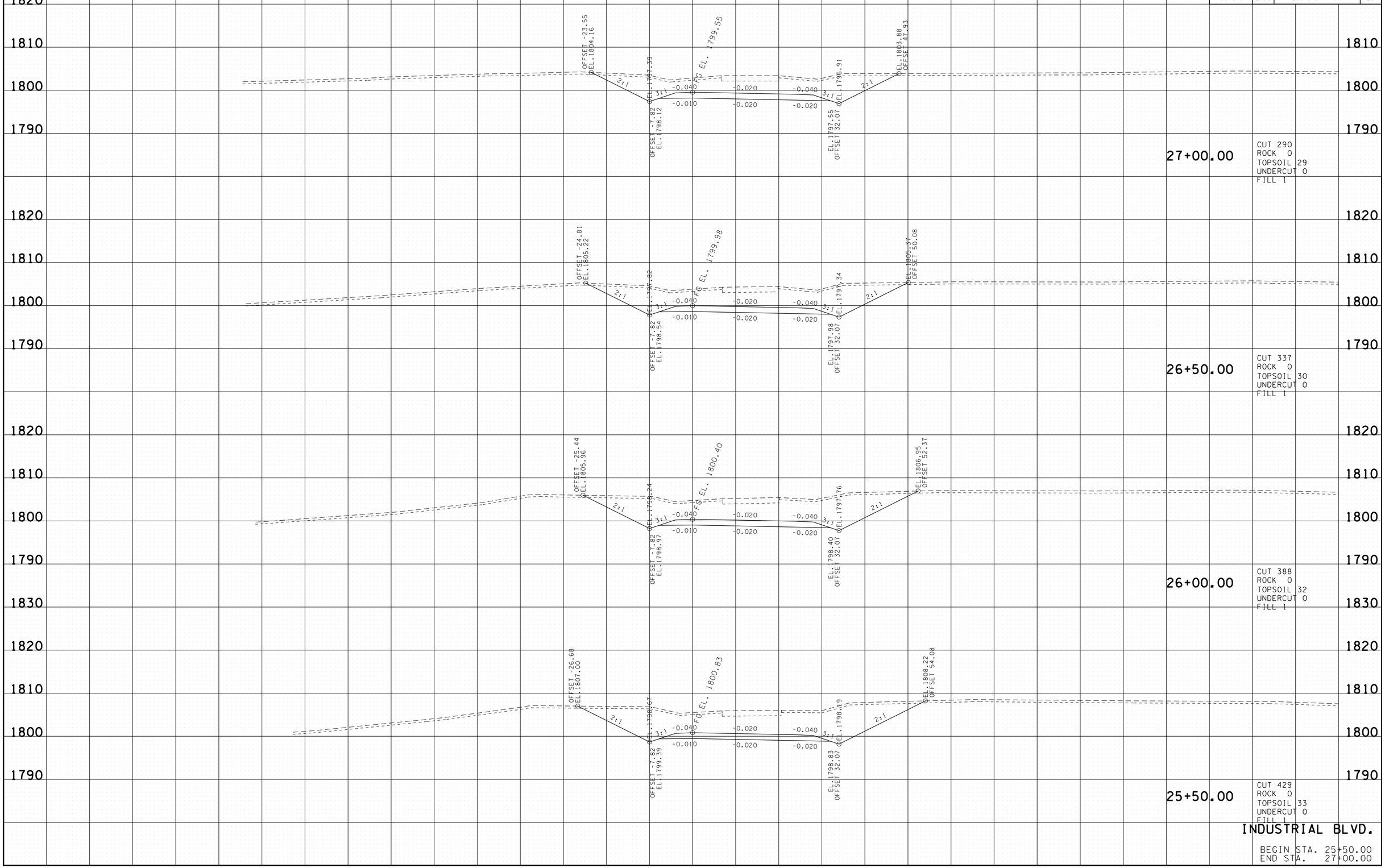


2/9/2015 1:13:10 PM
H:\II6003\Dgn\SIAxs.sht

| TYPE | YEAR | PROJECT NO. | SHEET NO. |
|---|---|---|---|
| R.O.W. | 2014 | 25945-2477-04 | 24 |
| CONST. | 2015 | 25945-3477-04 | 26 |

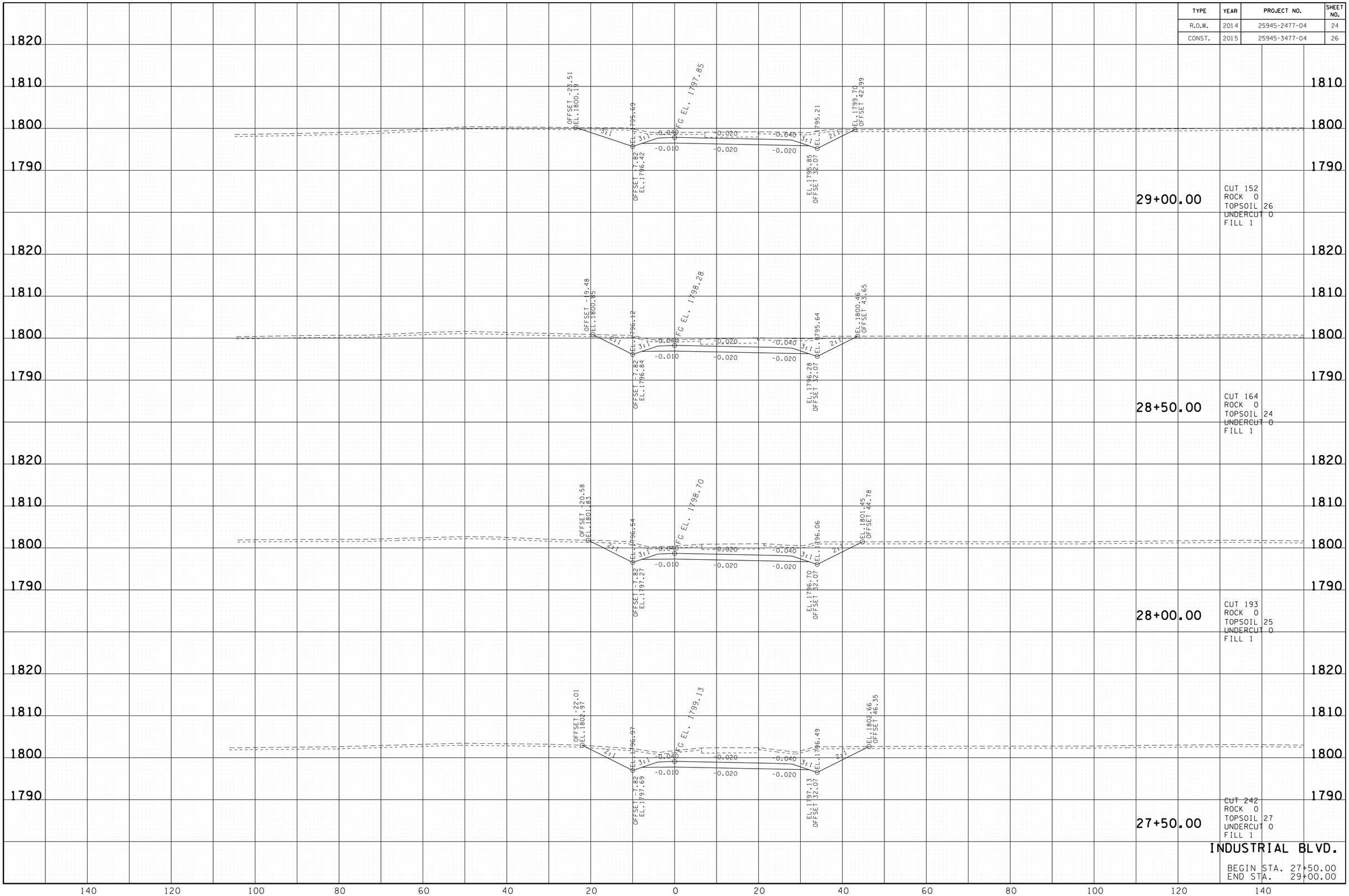


2/9/2015 1:13:12 PM
H:\1160031\Dgn\SIAxs.sht

| TYPE | YEAR | PROJECT NO. | SHEET NO. |
|---|---|---|---|
| R.O.W. | 2014 | 25945-2477-04 | 25 |
| CONST. | 2015 | 25945-3477-04 | 27 |

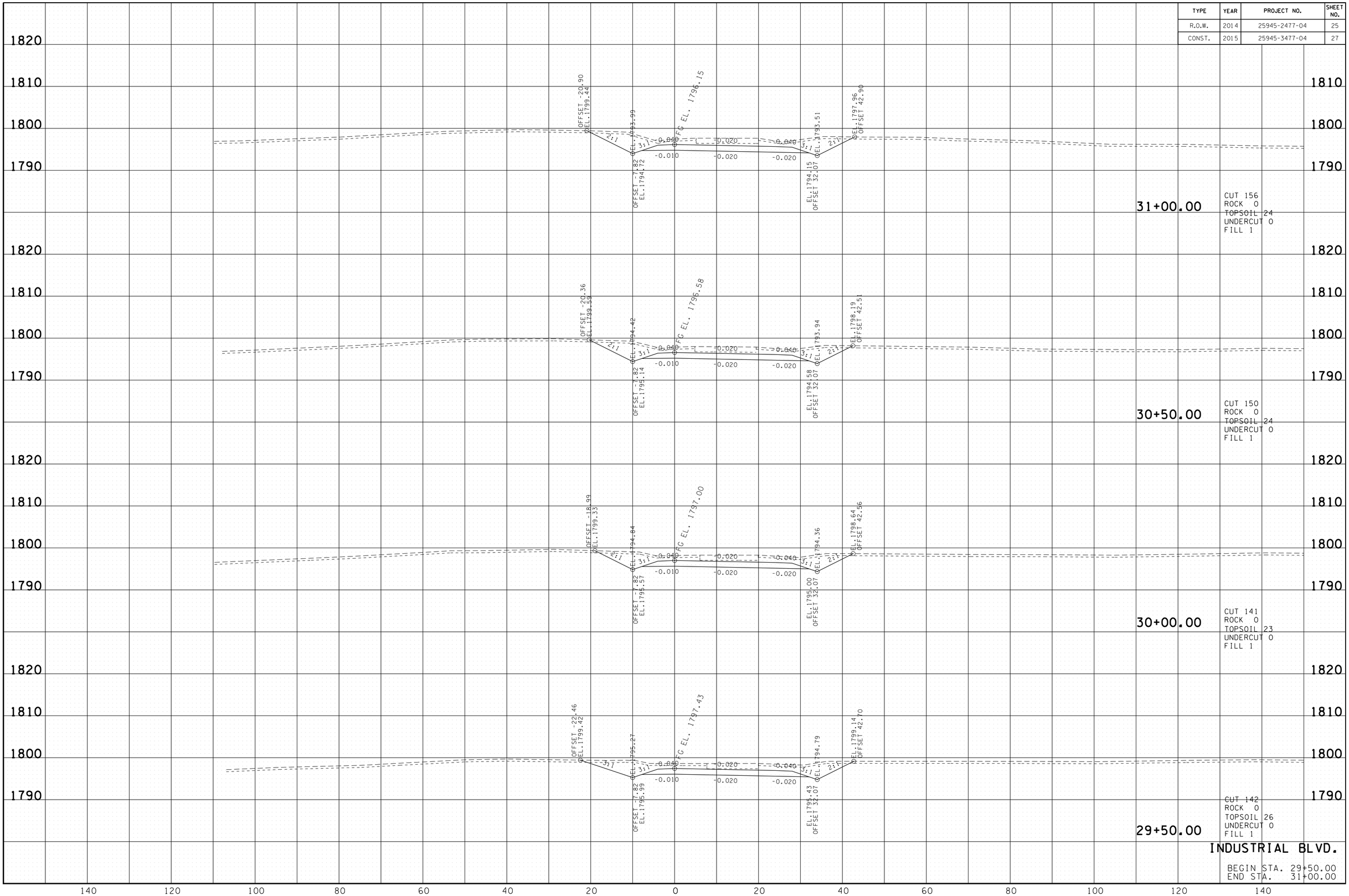


2/9/2015 1:13:13 PM
H:\IIL6003\Dgn\SIAxs.sht

| TYPE | YEAR | PROJECT NO. | SHEET NO. |
|---|---|---|---|
| R.O.W. | 2014 | 25945-2477-04 | 26 |
| CONST. | 2015 | 25945-3477-04 | 28 |

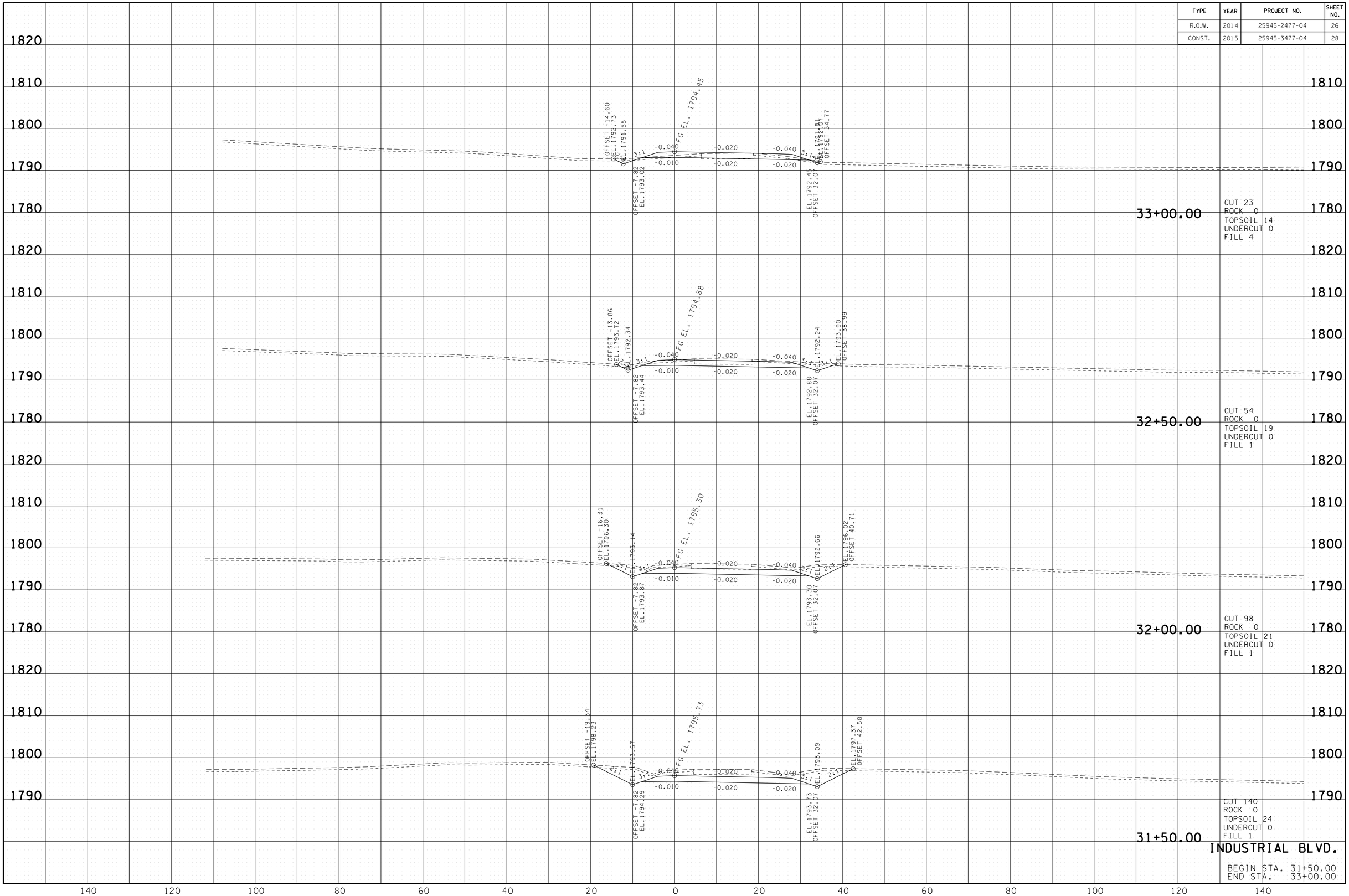


2/9/2015 14:34 PM
H:\IL6003\Dgn\SIAxs.sht

| TYPE | YEAR | PROJECT NO. | SHEET NO. |
|---|---|---|---|
| R.O.W. | 2014 | 25945-2477-04 | 27 |
| CONST. | 2015 | 25945-3477-04 | 29 |

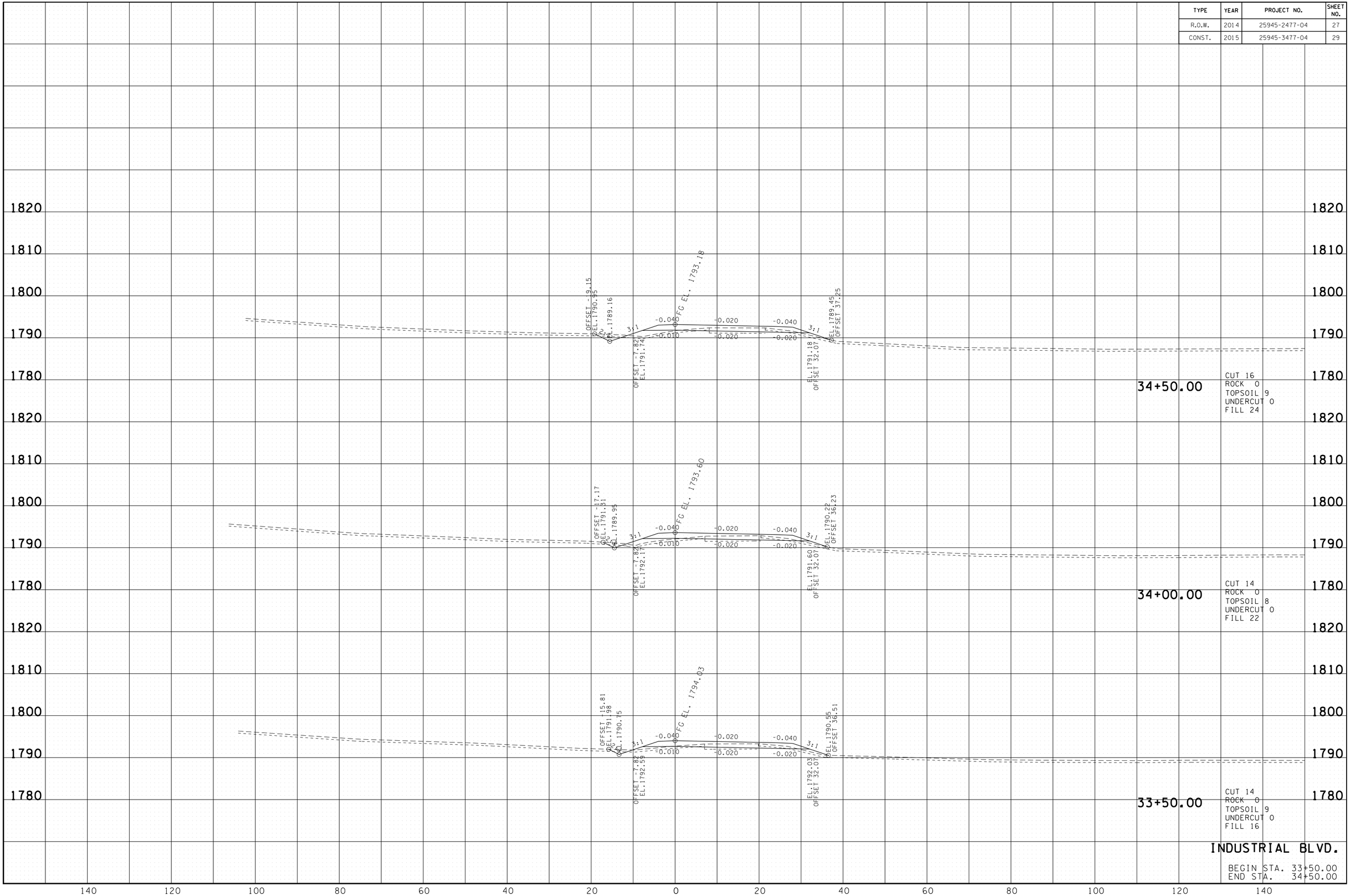


INDUSTRIAL BLVD.

BEGIN STA. 33+50.00
END STA. 34+50.00

2/9/2015 1:33:16 PM
H:\116003\Dgn\SIAxs.sht

| TYPE | YEAR | PROJECT NO. | SHEET NO. |
|---|---|---|---|
| R.O.W. | 2014 | 25945-2477-04 | 28 |
| CONST. | 2015 | 25945-3477-04 | 30 |

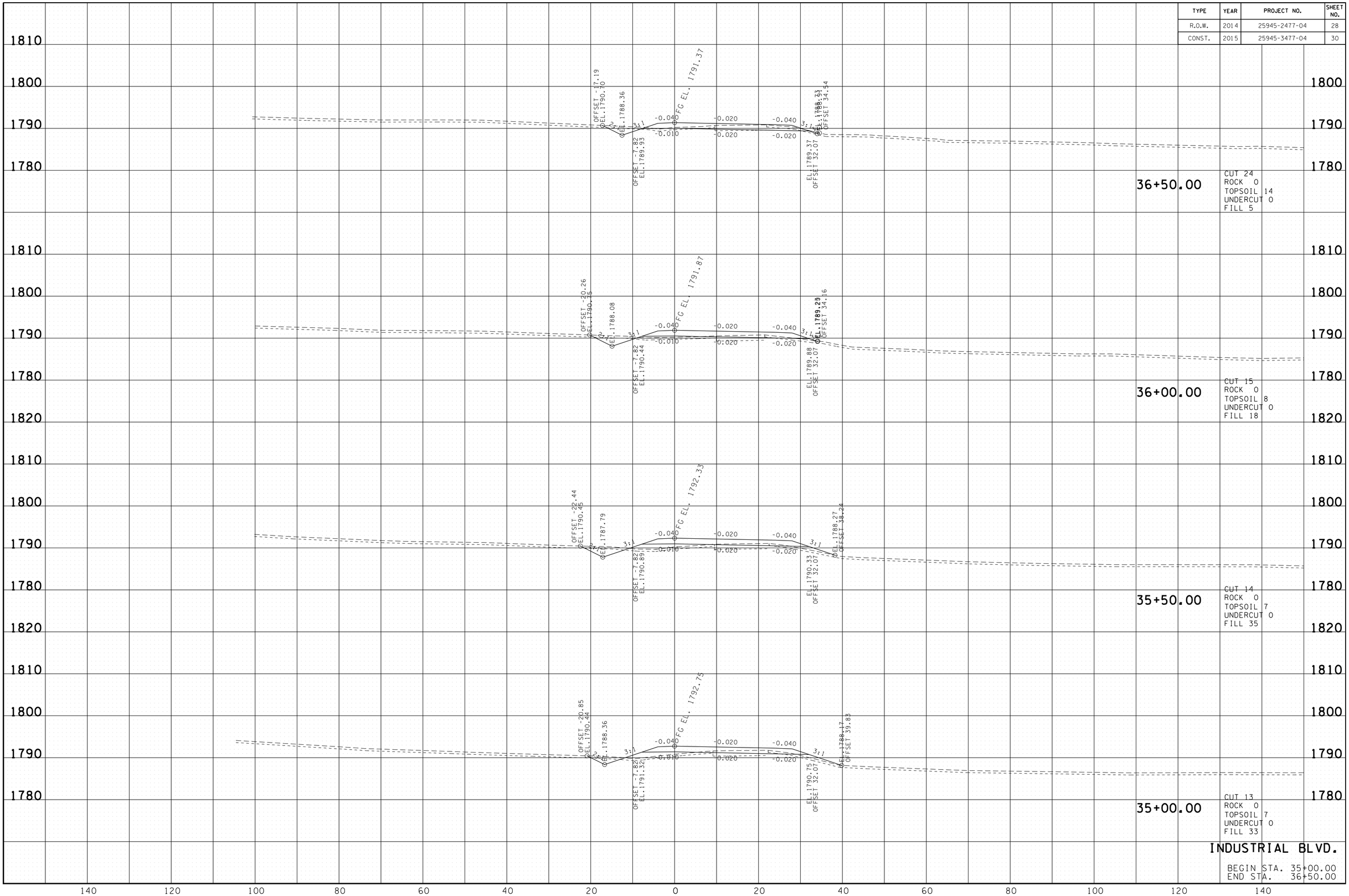


2/9/2015 11:31:7 PM
H:\11603\Dgn\SIAxs.sht

| TYPE | YEAR | PROJECT NO. | SHEET NO. |
|---|---|---|---|
| R.O.W. | 2014 | 25945-2477-04 | 29 |
| CONST. | 2015 | 25945-3477-04 | 31 |

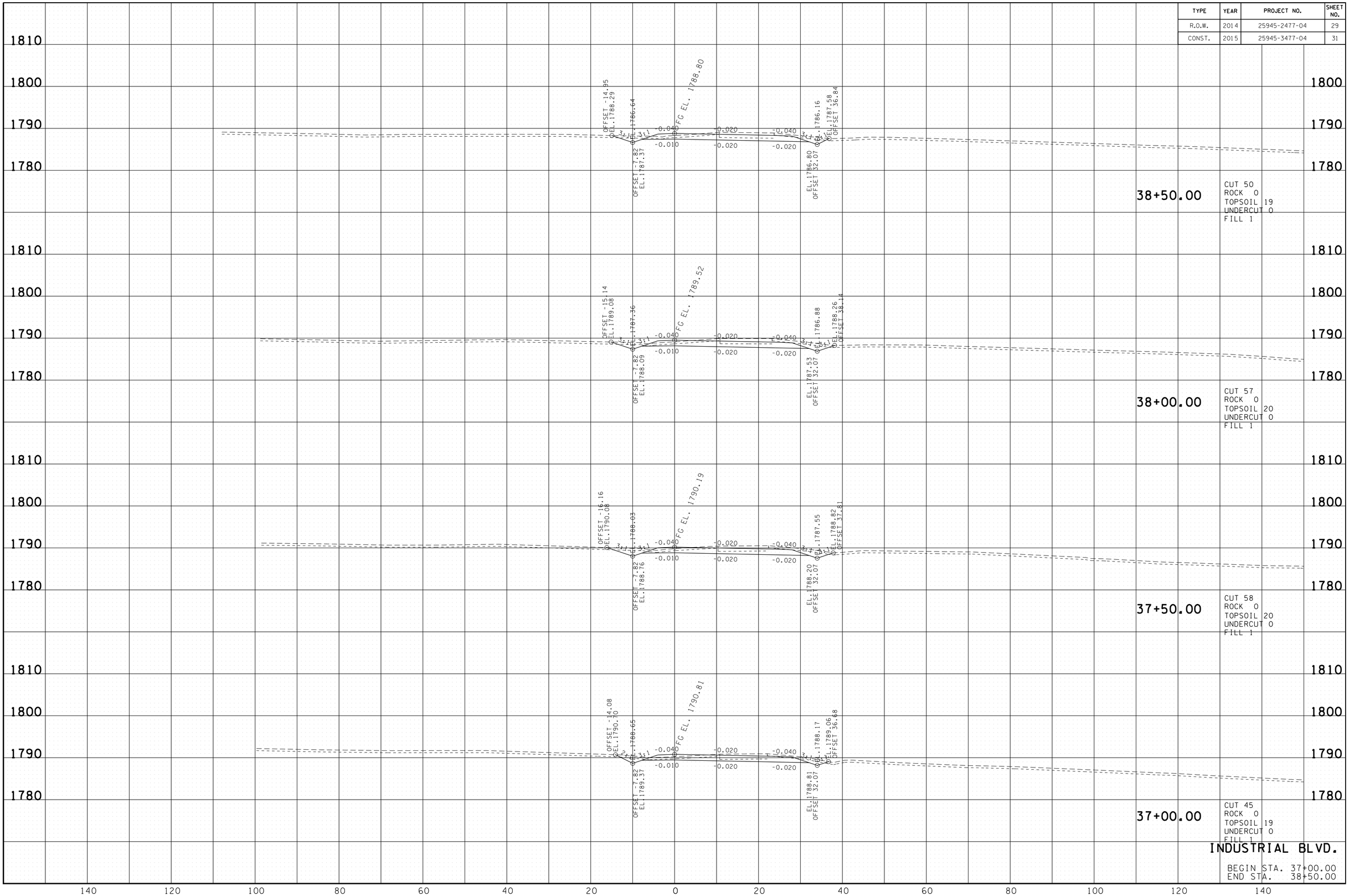


2/9/2015 1:13:18 PM
H:\IL6003\Dgn\SIAxs.sht

| TYPE | YEAR | PROJECT NO. | SHEET NO. |
|---|---|---|---|
| R.O.W. | 2014 | 25945-2477-04 | 30 |
| CONST. | 2015 | 25945-3477-04 | 32 |

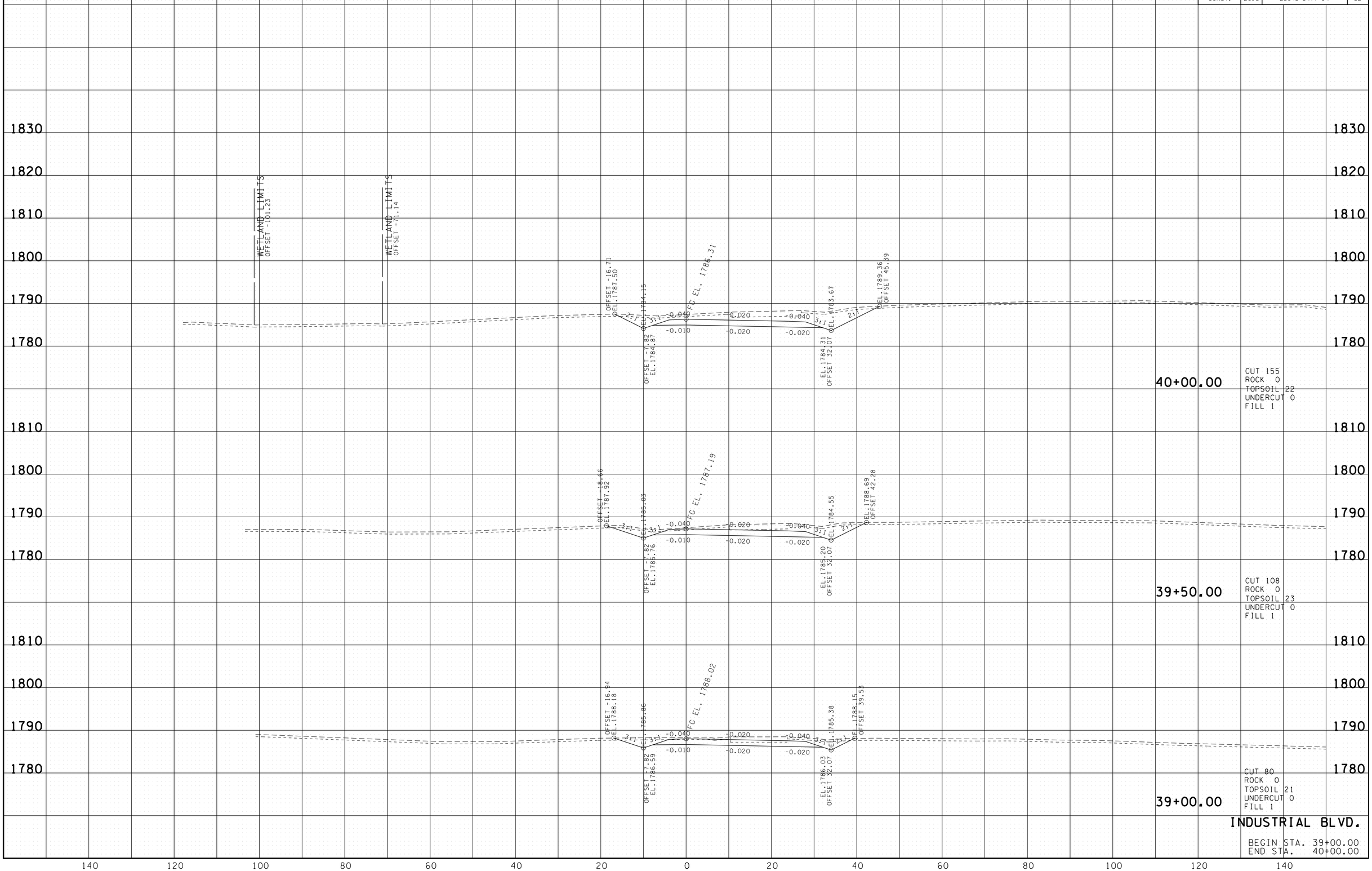


INDUSTRIAL BLVD.

BEGIN STA. 39+00.00
END STA. 40+00.00

2/9/2015 1:13:19 PM
H:\11600 3\Dgn\SIAxs.sht

| TYPE | YEAR | PROJECT NO. | SHEET NO. |
|---|---|---|---|
| R.O.W. | 2014 | 25945-2477-04 | 31 |
| CONST. | 2015 | 25945-3477-04 | 33 |

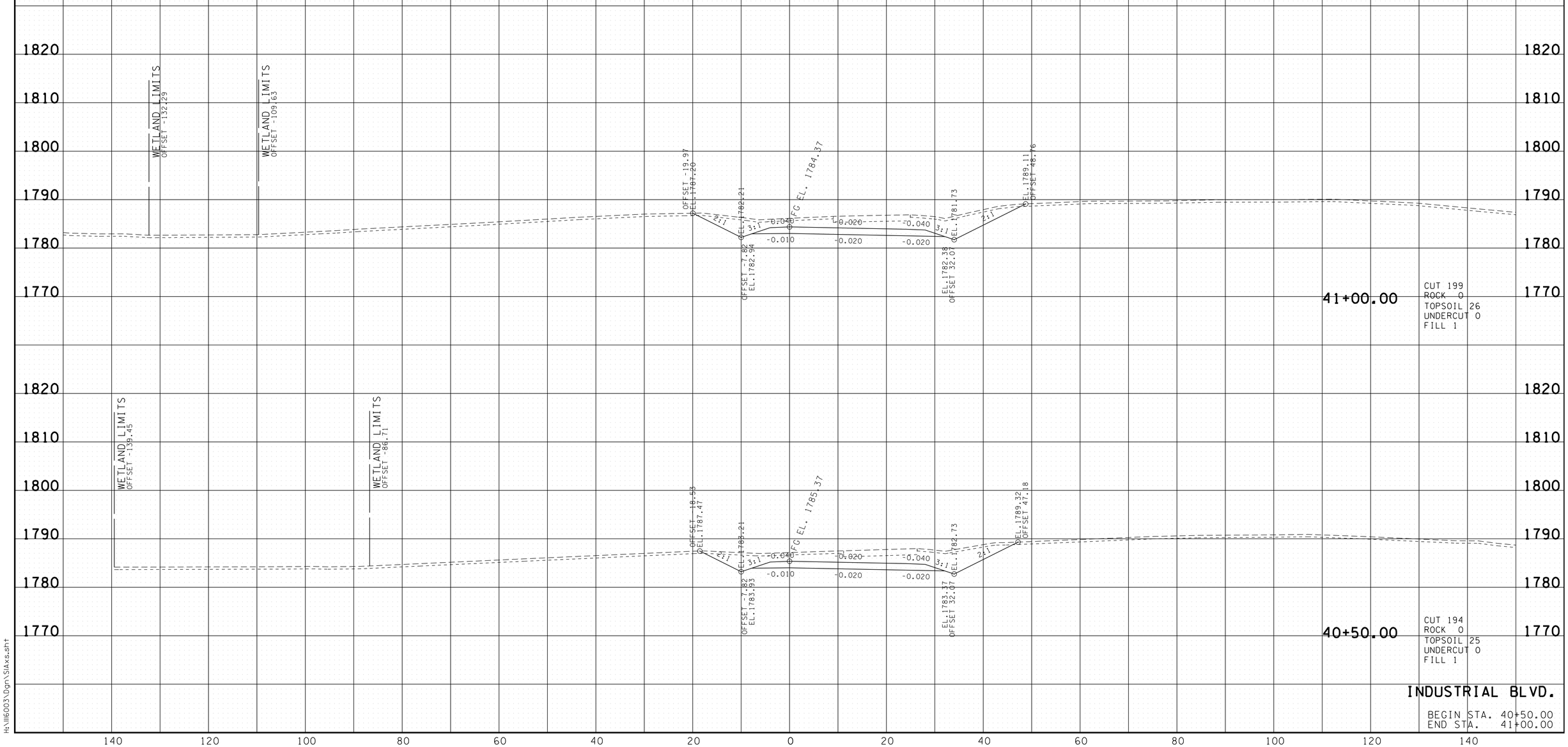


INDUSTRIAL BLVD.

BEGIN STA. 40+50.00
END STA. 41+00.00

2/9/2015 1:13:21 PM
H:\II6003\Dgn\SIAxs.sht

| TYPE | YEAR | PROJECT NO. | SHEET NO. |
|---|---|---|---|
| R.O.W. | 2014 | 25945-2477-04 | 32 |
| CONST. | 2015 | 25945-3477-04 | 34 |

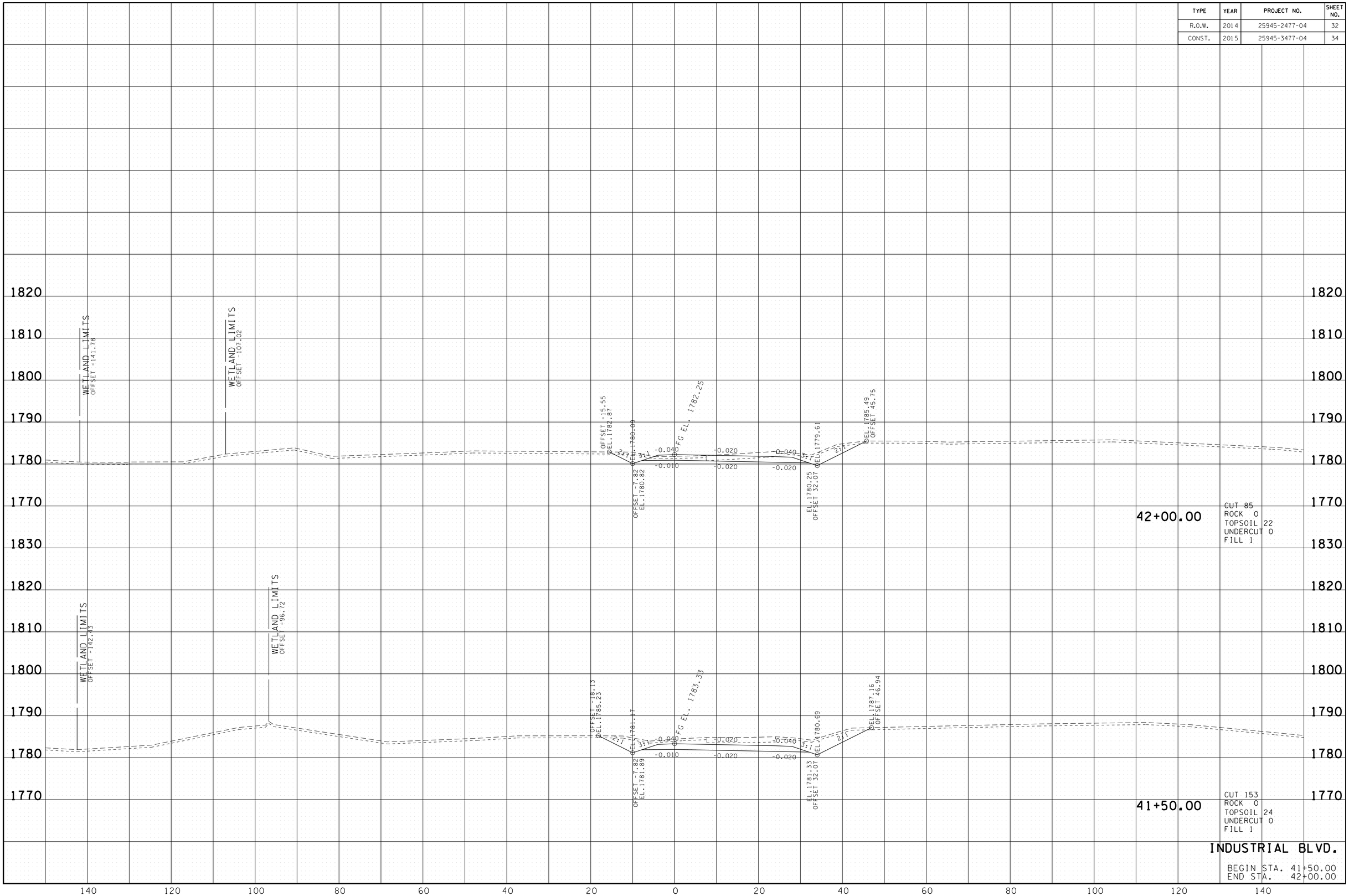


2/9/2015 1:13:22 PM
H:\11600 3\Dgn\SIAxs.sht

| TYPE | YEAR | PROJECT NO. | SHEET NO. |
|---|---|---|---|
| R.O.W. | 2014 | 25945-2477-04 | 33 |
| CONST. | 2015 | 25945-3477-04 | 35 |

REV 12-05-14: REVISED WETLAND LOCATIONS
STA. 45+50 & 46+00

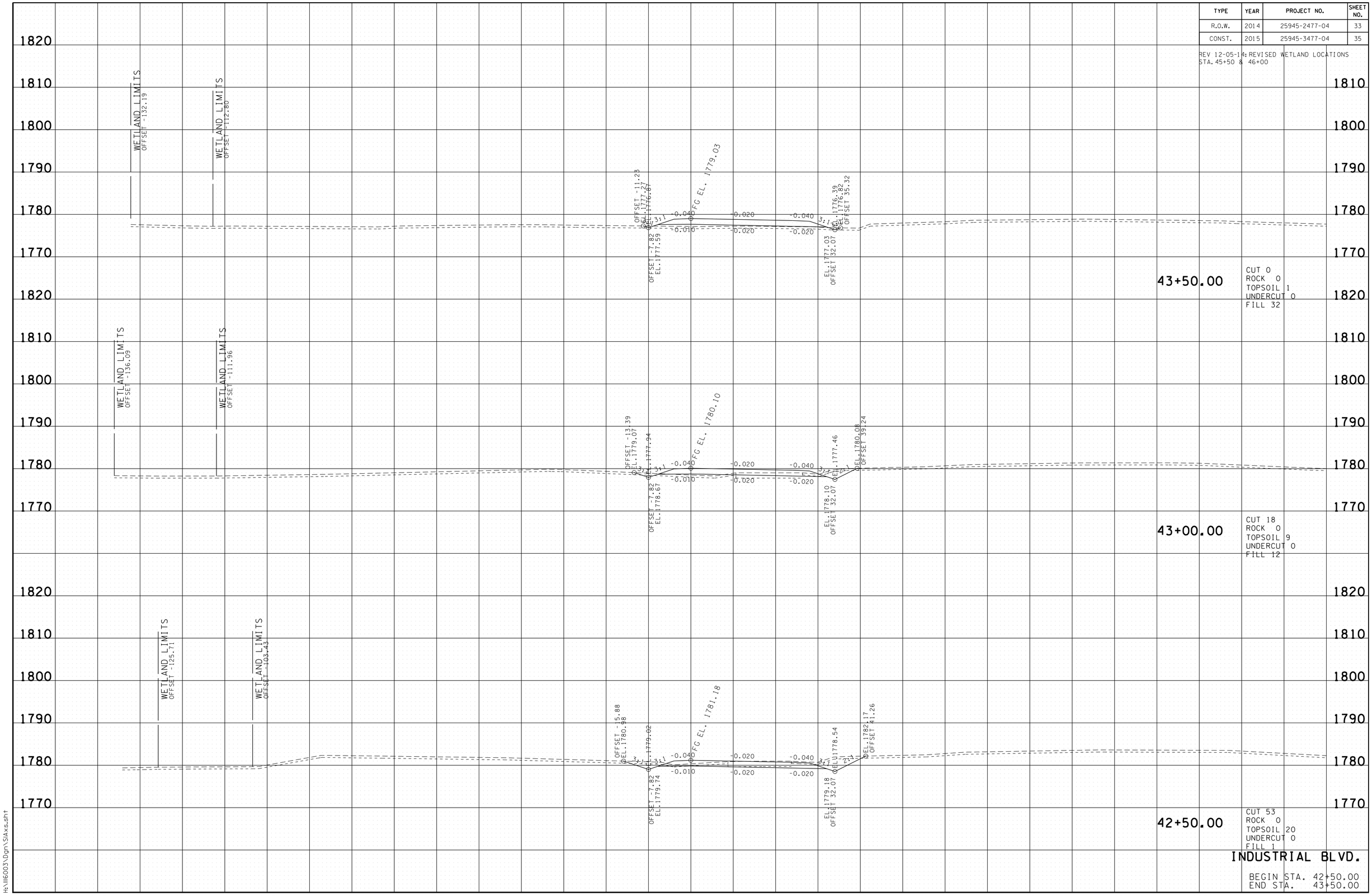


INDUSTRIAL BLVD.

BEGIN STA. 42+50.00
END STA. 43+50.00

2/9/2015 1:32:23 PM
H:\116003\Dgn\SIAxs.sht

| TYPE | YEAR | PROJECT NO. | SHEET NO. |
|---|---|---|---|
| R.O.W. | 2014 | 25945-2477-04 | 34 |
| CONST. | 2015 | 25945-3477-04 | 36 |

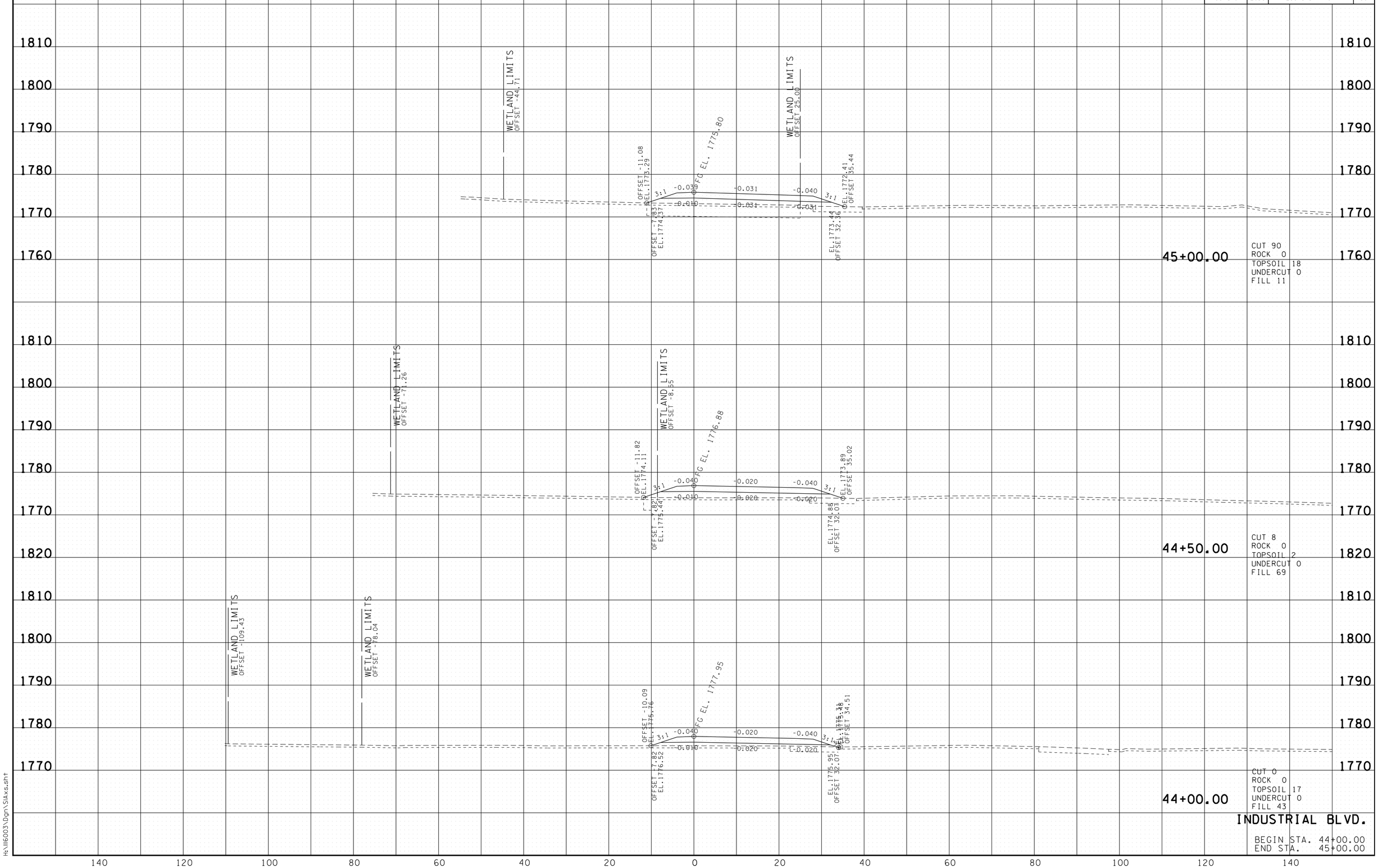


2/9/2015 1:13:24 PM
H:\116003\Dgn\SIAxs.sht

| TYPE | YEAR | PROJECT NO. | SHEET NO. |
|---|---|---|---|
| R.O.W. | 2014 | 25945-2477-04 | 35 |
| CONST. | 2015 | 25945-3477-04 | 37 |

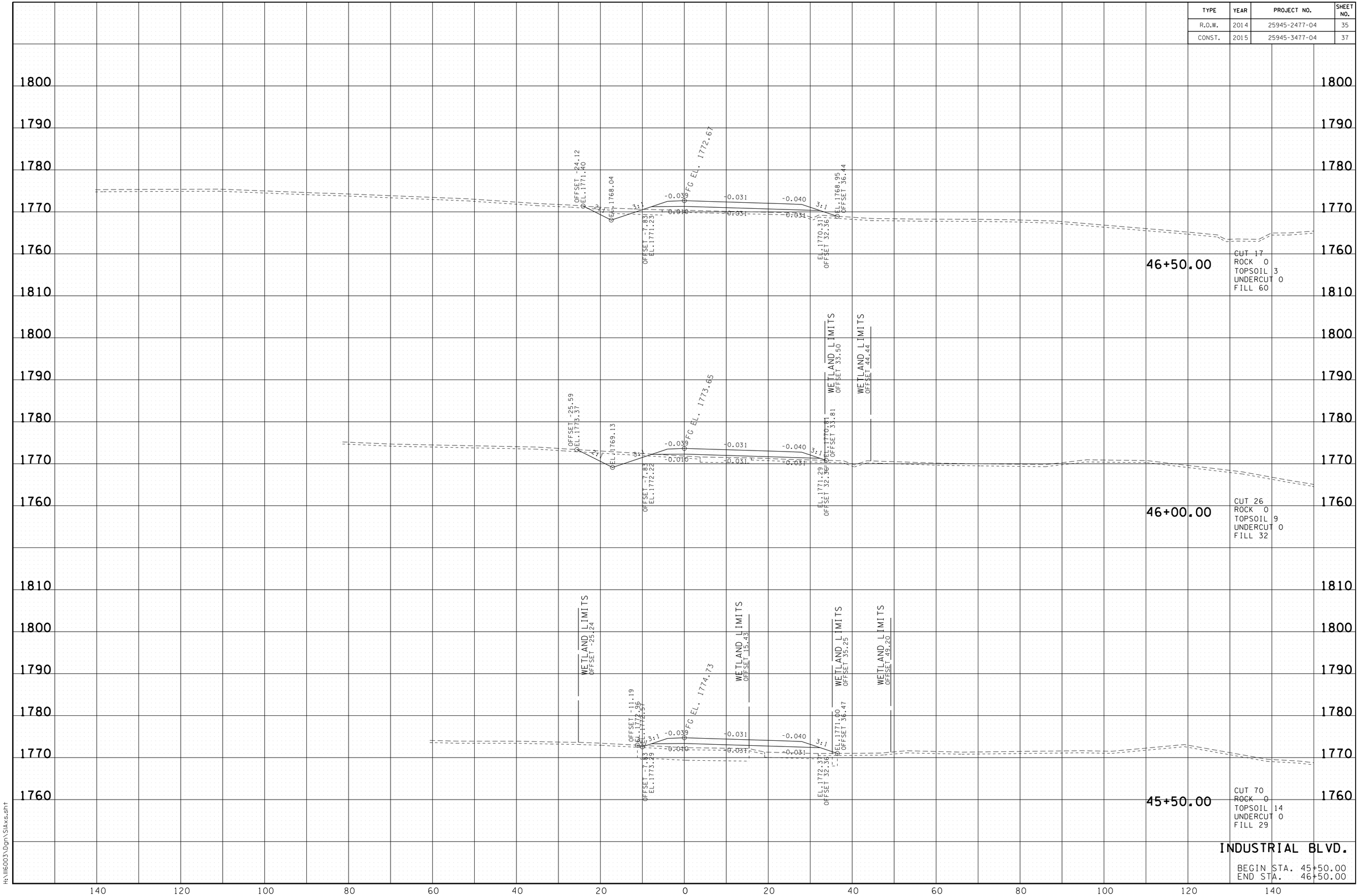


2/9/2015 1:3:26 PM
H:\116003\Dgn\SIAxs.sht

| TYPE | YEAR | PROJECT NO. | SHEET NO. |
|---|---|---|---|
| R.O.W. | 2014 | 25945-2477-04 | 36 |
| CONST. | 2015 | 25945-3477-04 | 38 |

REV 01-15-15: REVISED SLOPES STA. 48+50 RT

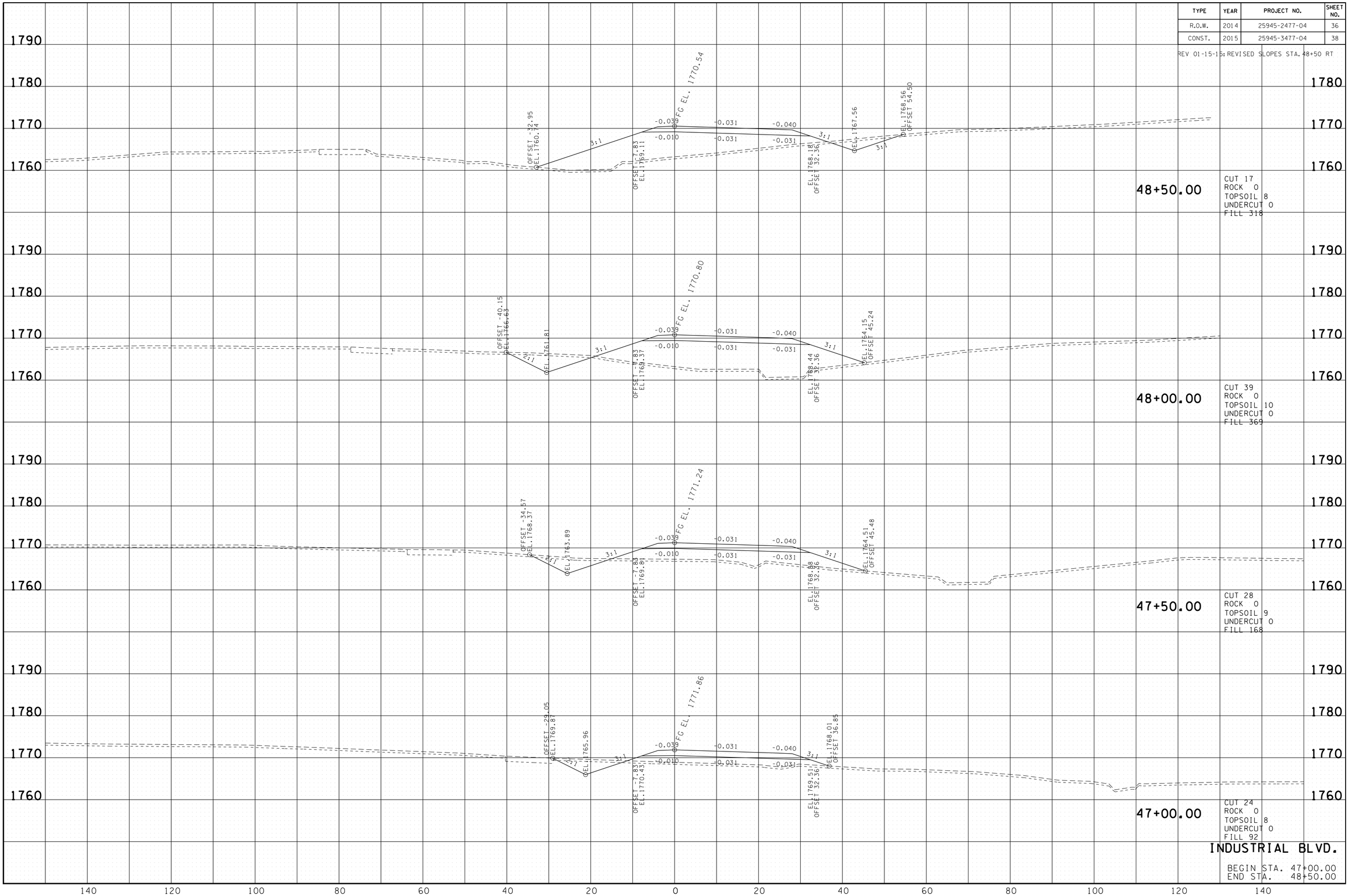


# INDUSTRIAL BLVD.

BEGIN STA. 47+00.00
END STA. 48+50.00

2/9/2015 1:13:27 PM
H:\11603\Dgn\SIAxs.sht

| TYPE | YEAR | PROJECT NO. | SHEET NO. |
|---|---|---|---|
| R.O.W. | 2014 | 25945-2477-04 | 37 |
| CONST. | 2015 | 25945-3477-04 | 39 |

REV 01-15-15: REVISED SLOPES STA. 49+00 TO STA. 50+50 LT & RT

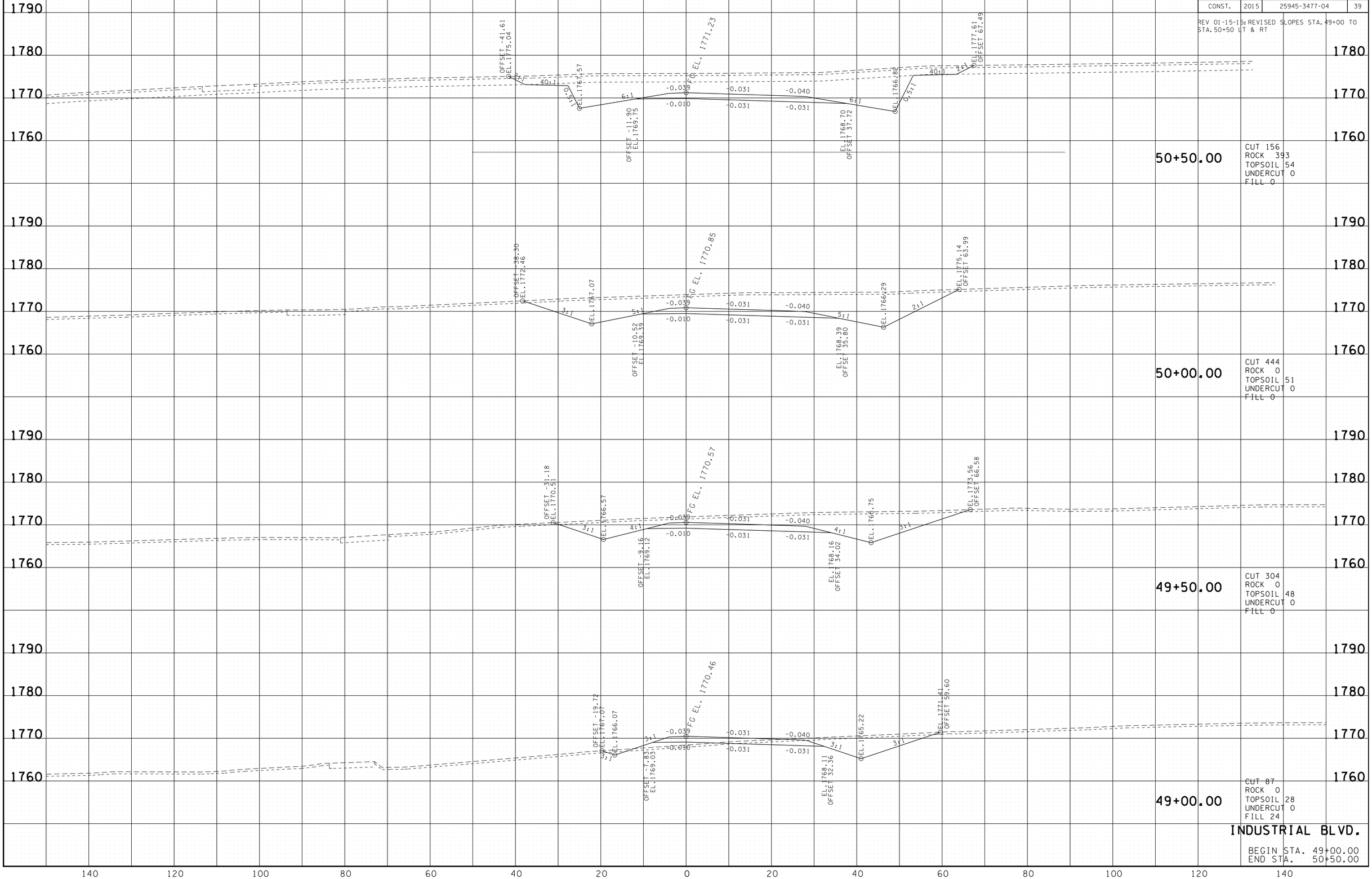


INDUSTRIAL BLVD.

BEGIN STA. 49+00.00
END STA. 50+50.00

2/9/2015 1:13:28 PM
H:\11600 3\Dgn\SIAxs.sht

| TYPE | YEAR | PROJECT NO. | SHEET NO. |
|---|---|---|---|
| R.O.W. | 2014 | 25945-2477-04 | 38 |
| CONST. | 2015 | 25945-3477-04 | 40 |

REV 01-15-15: REVISED SLOPES STA. 51+00 TO STA. 52+00 LT & RT

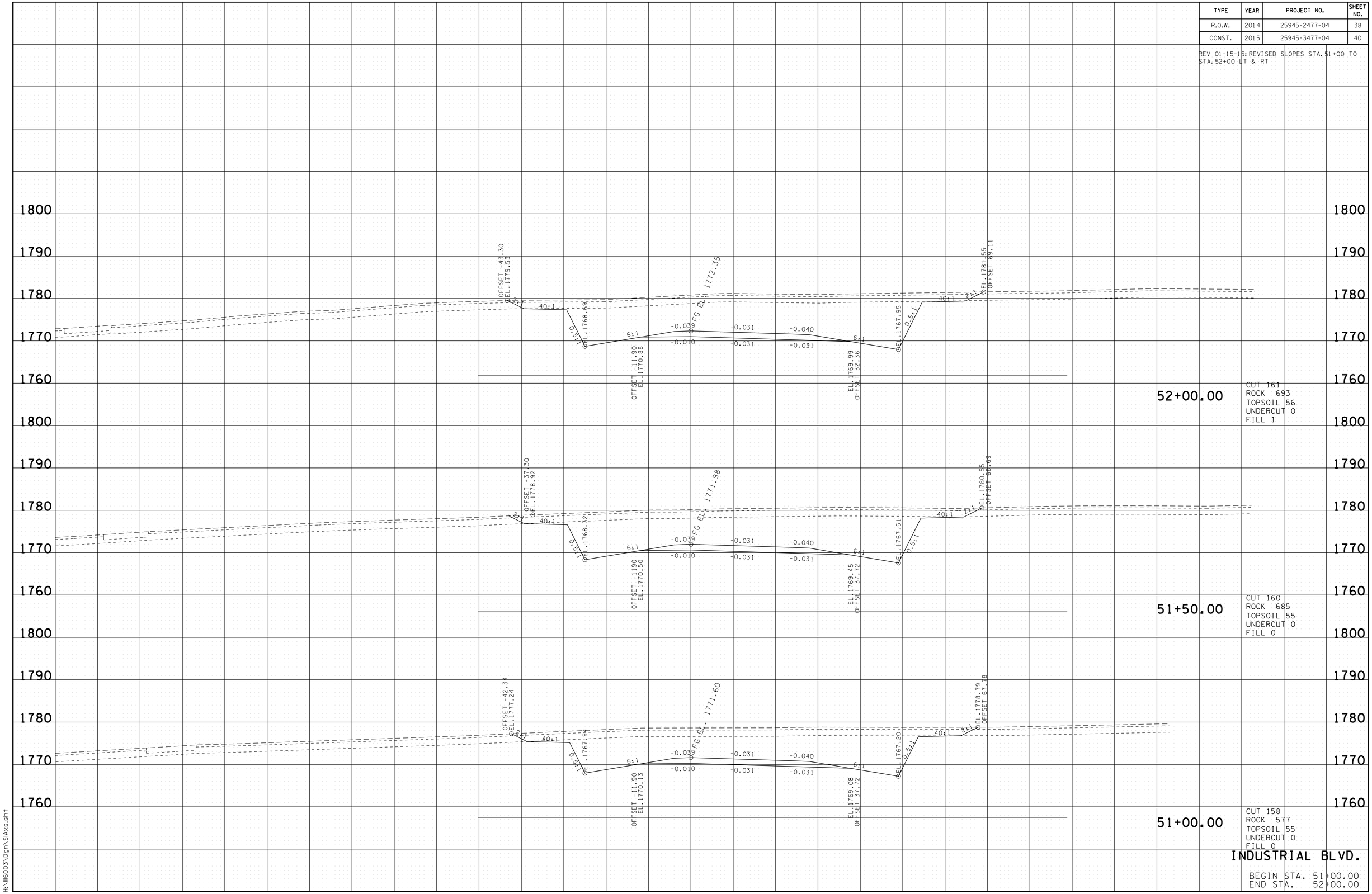


2/9/2015 1:43:29 PM
H:\116003\Dgn\SIAxs.sht

| TYPE | YEAR | PROJECT NO. | SHEET NO. |
|---|---|---|---|
| R.O.W. | 2014 | 25945-2477-04 | 39 |
| CONST. | 2015 | 25945-3477-04 | 41 |

REV 01-15-15: REVISED SLOPES STA. 52+50 TO STA. 53+50 LT & RT

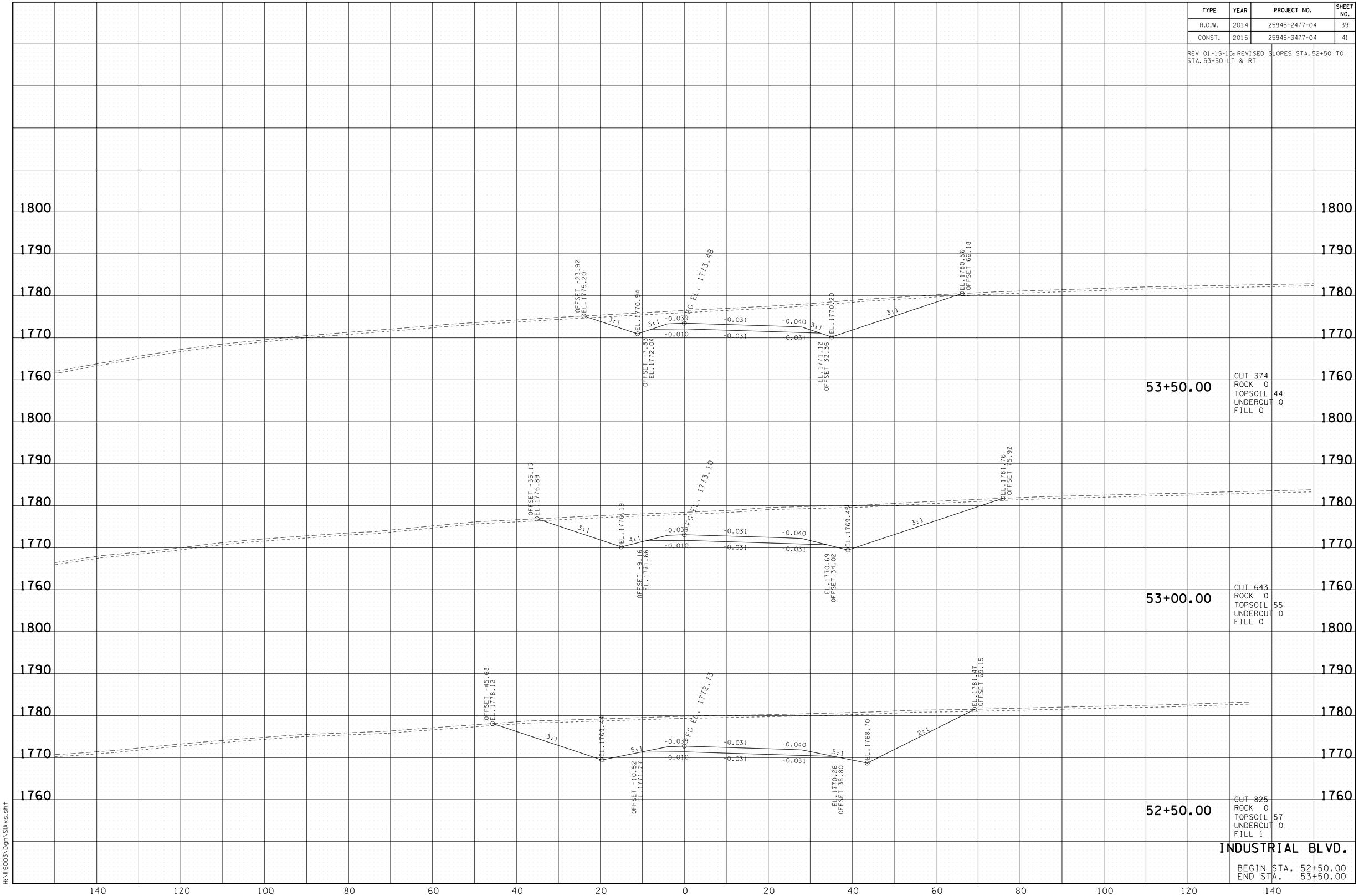


2/9/2015 11:33 PM
H:\116003\Dgn\SIAxs.sht

| TYPE | YEAR | PROJECT NO. | SHEET NO. |
|---|---|---|---|
| R.O.W. | 2014 | 25945-2477-04 | 40 |
| CONST. | 2015 | 25945-3477-04 | 42 |

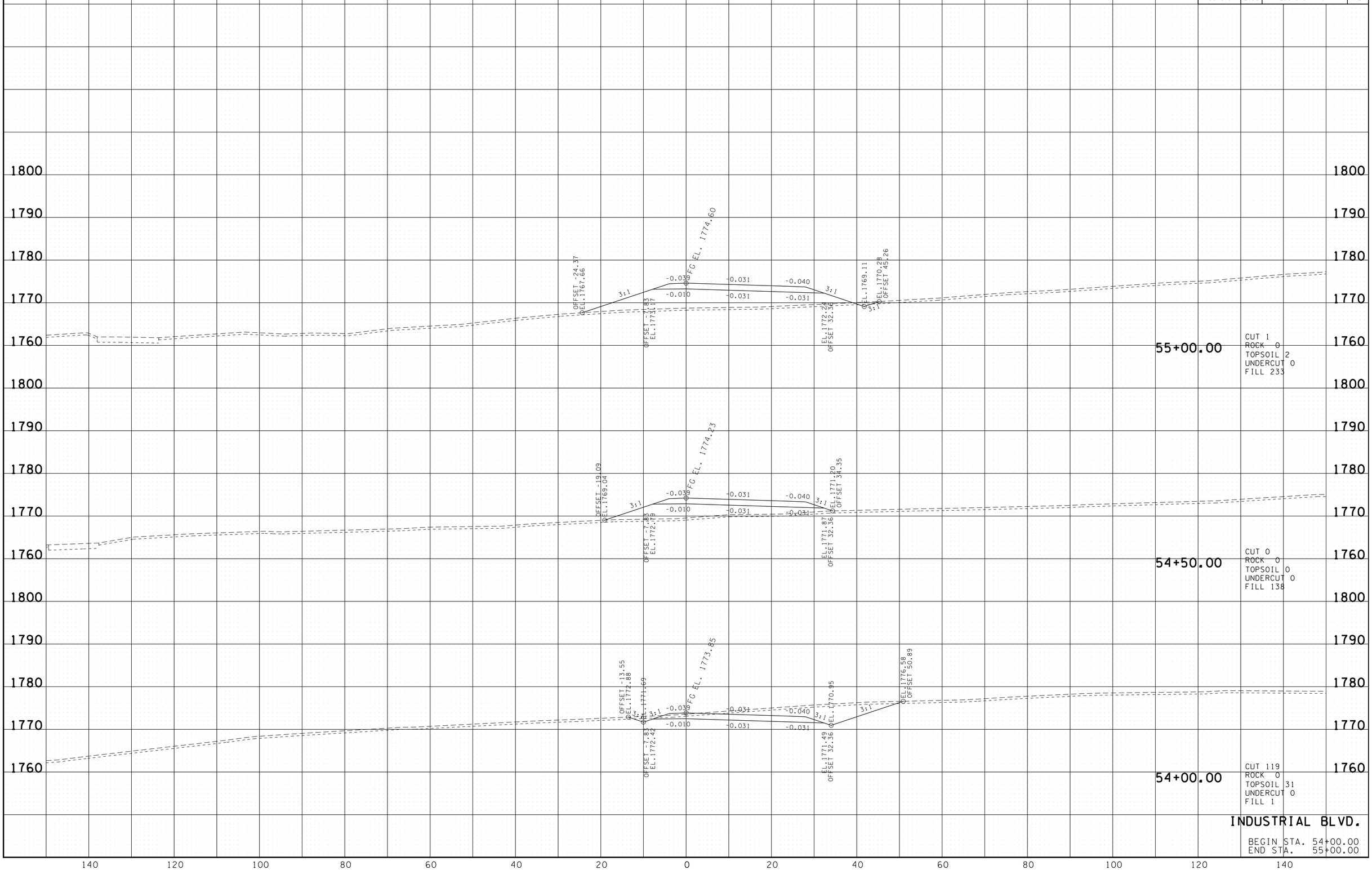


2/9/2015 1:33:32 PM
H:\IIL6003\Dgn\SIAxs.sht

| TYPE | YEAR | PROJECT NO. | SHEET NO. |
|---|---|---|---|
| R.O.W. | 2014 | 25945-2477-04 | 41 |
| CONST. | 2015 | 25945-3477-04 | 43 |

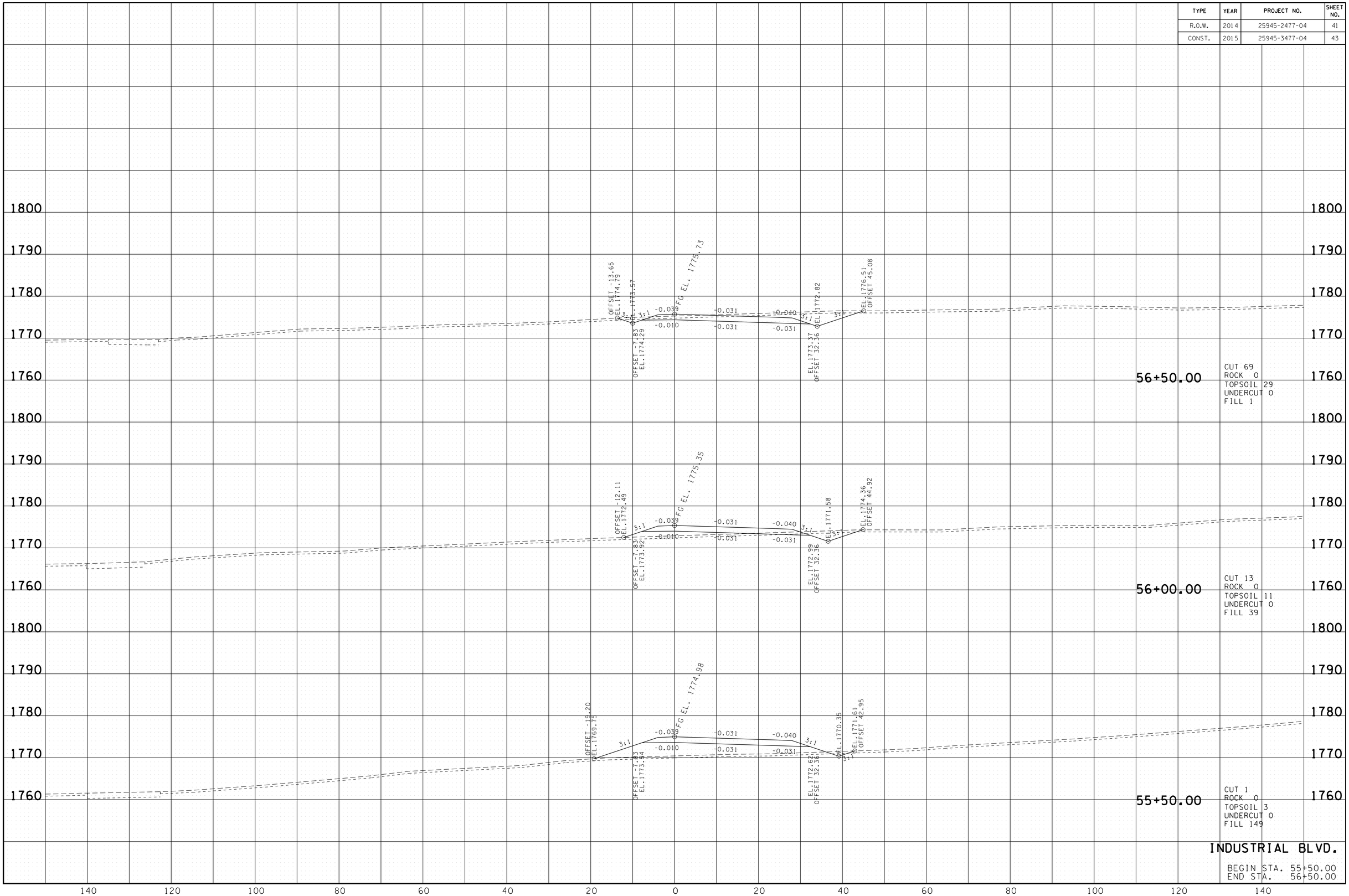


INDUSTRIAL BLVD.

BEGIN STA. 55+50.00
END STA. 56+50.00

2/9/2015 1:33:33 PM
H:\116003\Dgn\SIAxs.sht

| TYPE | YEAR | PROJECT NO. | SHEET NO. |
|---|---|---|---|
| R.O.W. | 2014 | 25945-2477-04 | 42 |
| CONST. | 2015 | 25945-3477-04 | 44 |

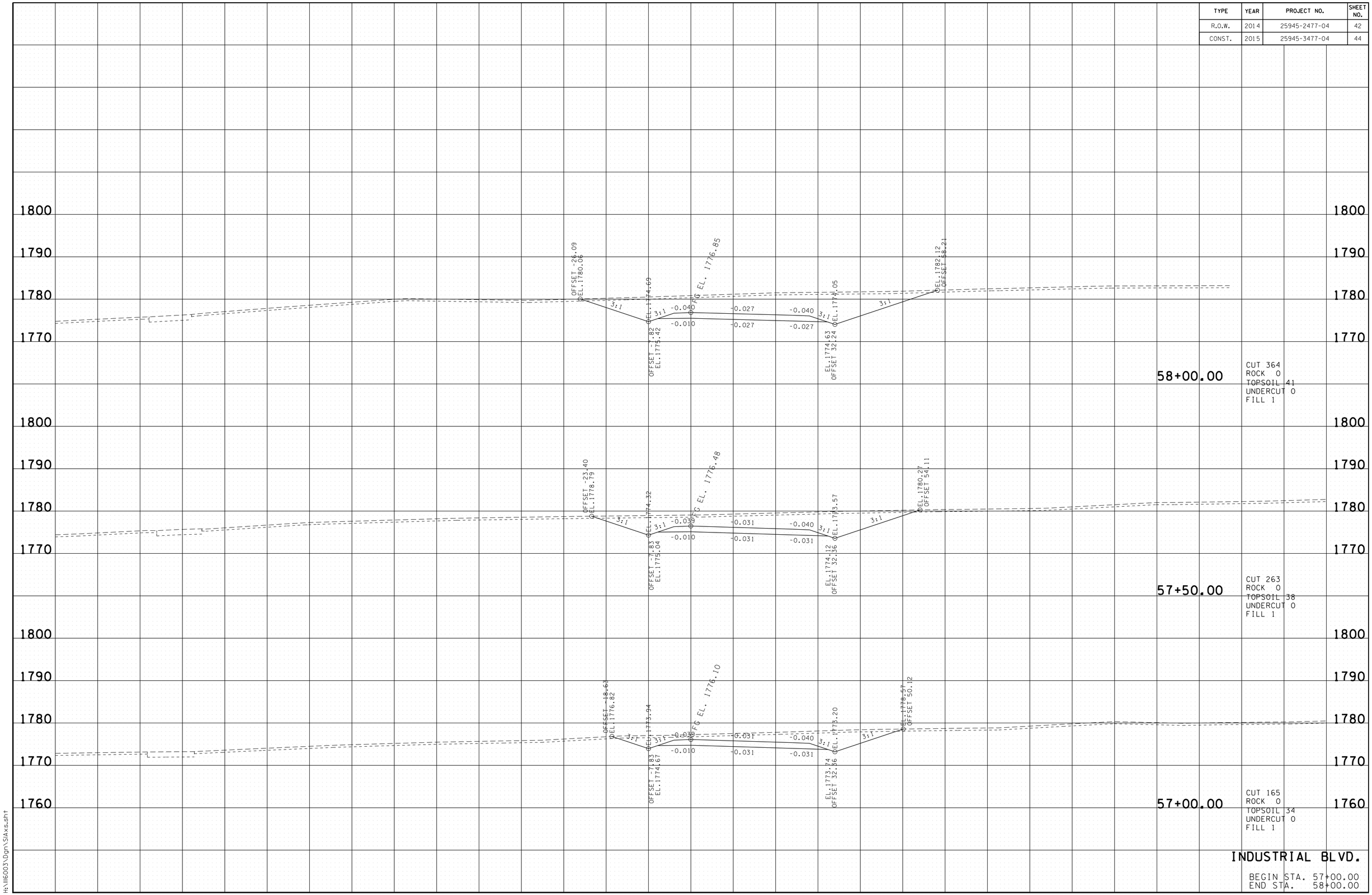


2/9/2015 1:13:34 PM
H:\116003\Dgn\SIAxs.sht

| TYPE | YEAR | PROJECT NO. | SHEET NO. |
|---|---|---|---|
| R.O.W. | 2014 | 25945-2477-04 | 43 |
| CONST. | 2015 | 25945-3477-04 | 45 |

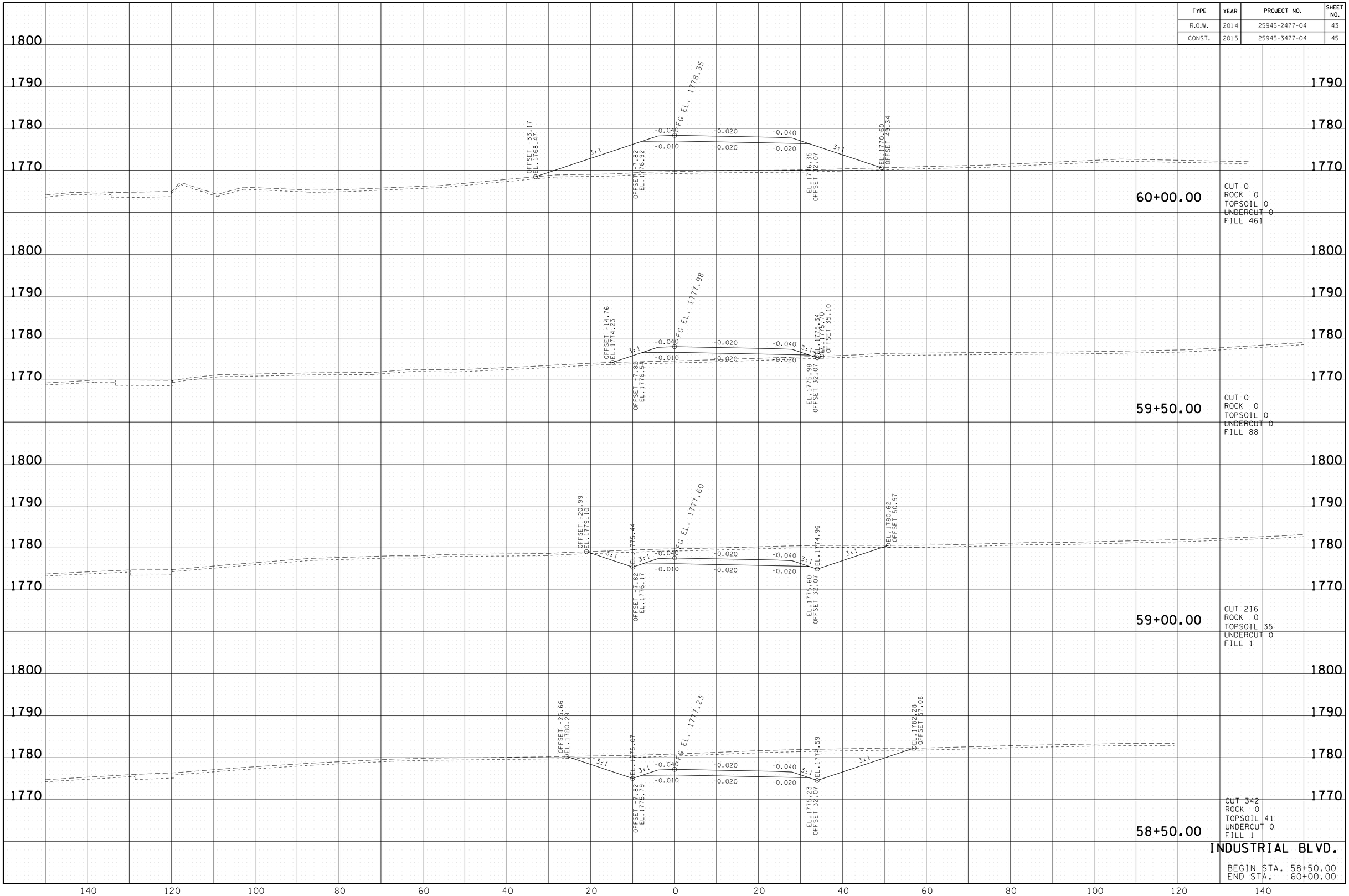


INDUSTRIAL BLVD.

BEGIN STA. 58+50.00
END STA. 60+00.00

2/9/2015 1:13:35 PM
H:\11603\Dgn\SIAxs.sht
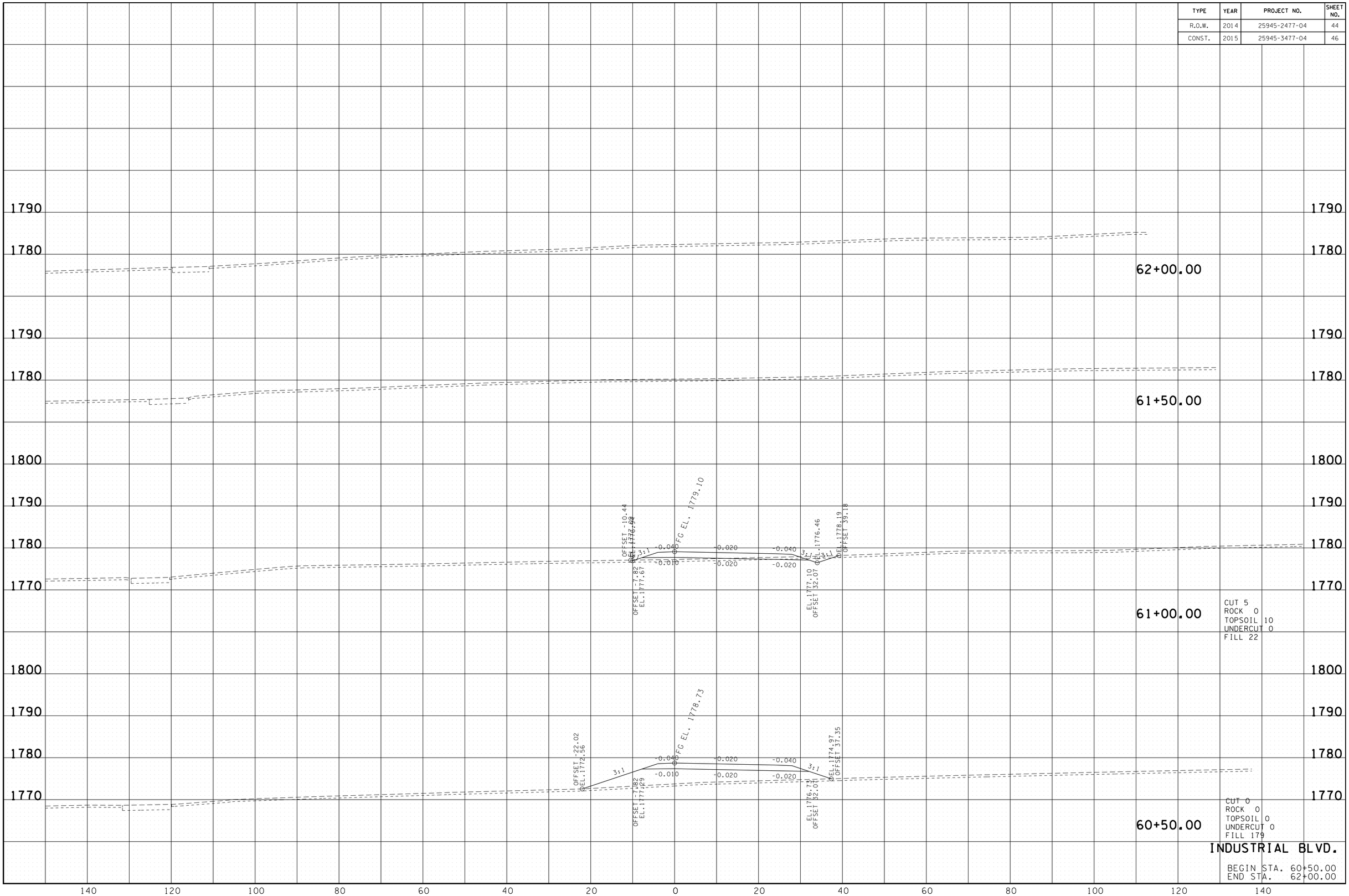
| TYPE | YEAR | PROJECT NO. | SHEET NO. |
|---|---|---|---|
| R.O.W. | 2014 | 25945-2477-04 | 44 |
| CONST. | 2015 | 25945-3477-04 | 46 |