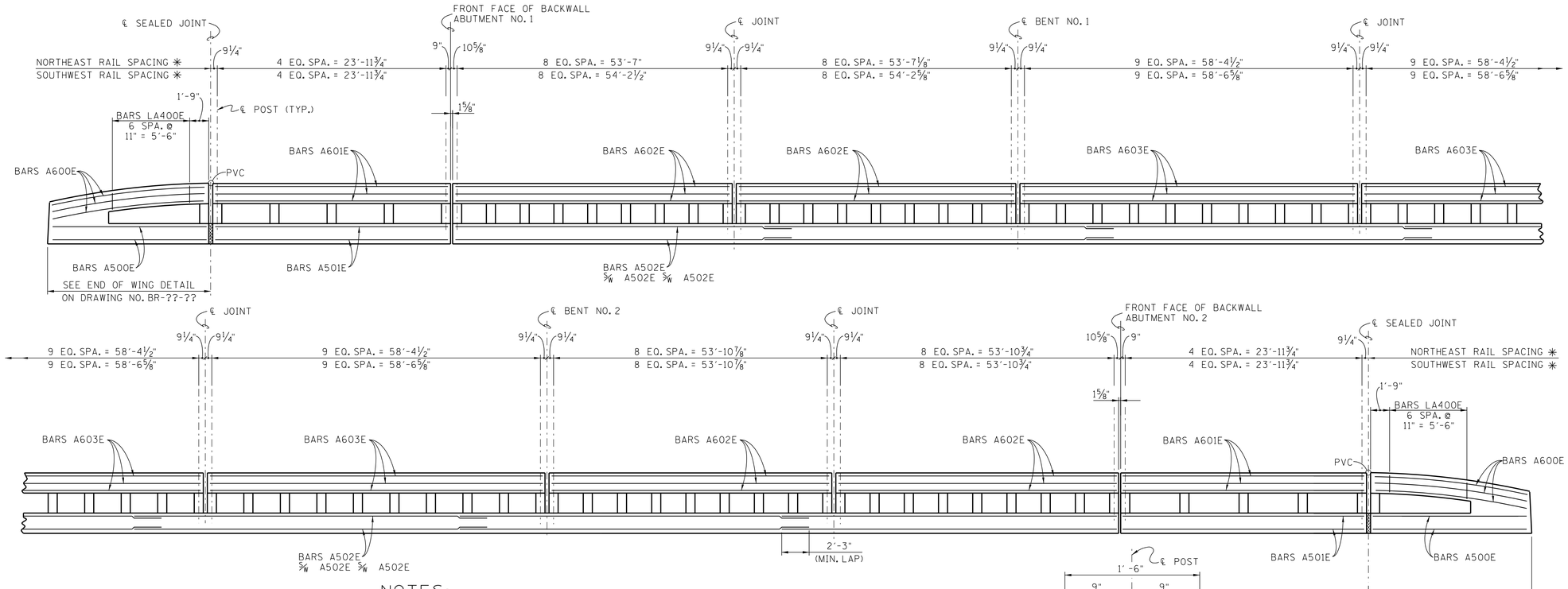

✳DENOTES: DISTANCE ALONG OUTSIDE EDGE OF SLAB.

NOTES:

1.) CONCRETE IN CURBS MAY BE PLACED IN ANY SEQUENCE OF POURS NOT MORE THAN 32'-0" NOR LESS THAN 20'-0" IN LENGTH WITH AN INTERVAL OF AT LEAST 12 HOURS BETWEEN ADJACENT POURS.

ELEVATION

(POST SPACING MEASURED ALONG GUTTER LINE)

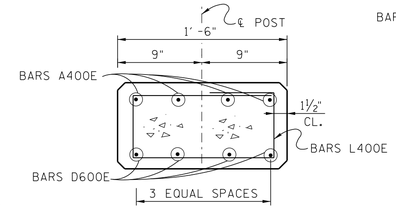

SECTION A-A

(TYPICAL FOR ALL POSTS)

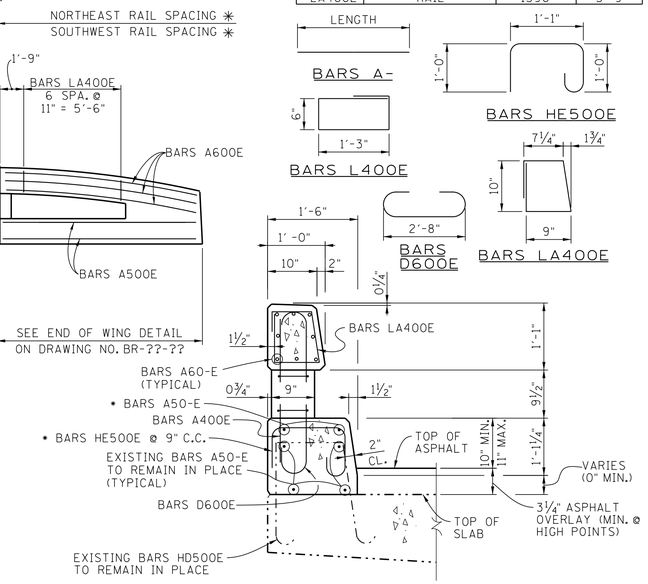

SECTION "D"-"D"

• DENOTES: ADDITIONAL BARS REQUIRED WHEN TOP COVER OVER EXISTING BARS HD500E EXCEEDS 3".

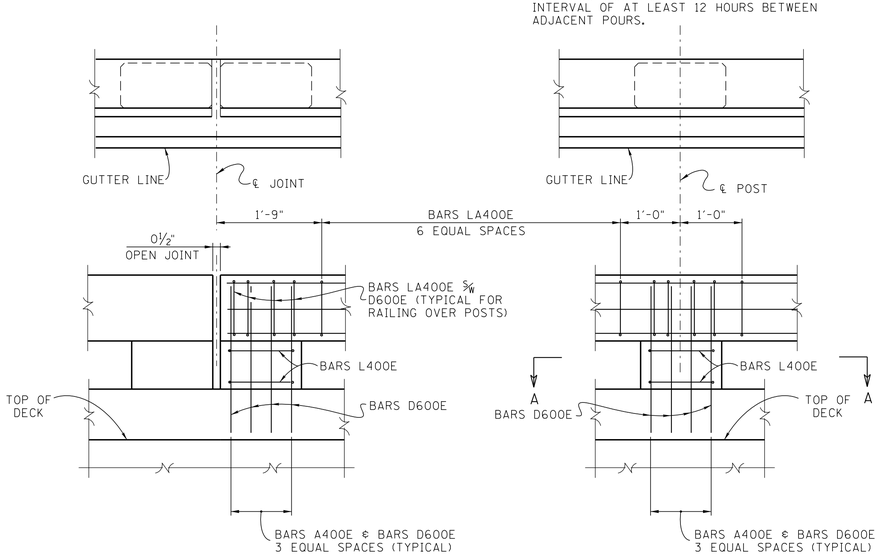

AT RAIL JOINT

(REINFORCEMENT SYMMETRICAL ABOUT ℄ JOINT)

INTERIOR

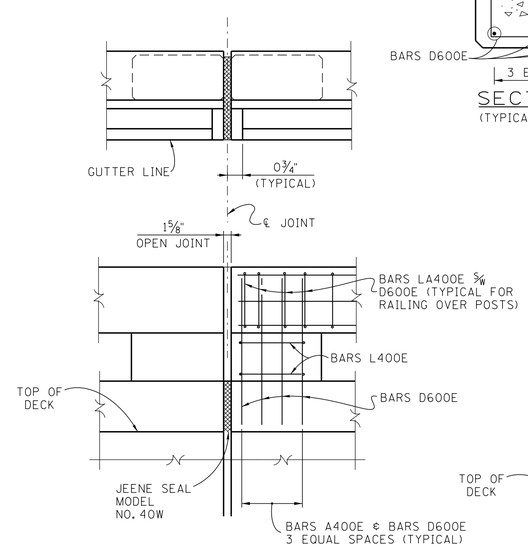

AT ABUTMENT

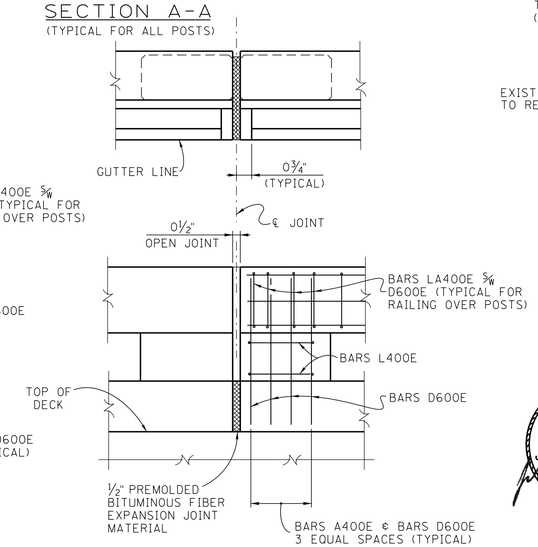

AT SEALED JOINT

TYPICAL DETAILS

CONST. NO. 51005-3230-14

PROJECT NO.	YEAR	SHEET NO.
NH-99(51)	2015	

REVISIONS

NO.	DATE	BY	BRIEF DESCRIPTION

BILL OF STEEL

BAR	LOCATION	NO. REQ'D.	LENGTH
A400E	CURB POST ℄ RAIL	624	2'-8"
A500E	CURB	8	15'-0"
A501E	CURB	8	25'-2"
A502E	CURB	28	60'-0"
A600E	RAIL	32	15'-0"
A601E	RAIL	32	25'-2"
A602E	RAIL	64	55'-0"
A603E	RAIL	48	59'-8"
D600E	CURB POST ℄ RAIL	624	4'-0"
HE500E	CURB	1206	3'-11"
L400E	POST	312	4'-2"
LA400E	RAIL	1590	3'-9"

ESTIMATED QUANTITIES

CLASS "A" CONCRETE (BRIDGES) C.Y.	EPOXY-COATED REINFORCING STEEL (BRIDGES) LB.
101	28,245

STATE OF TENNESSEE
DEPARTMENT OF TRANSPORTATION

BRIDGE NO. 1
CONCRETE BRIDGE RAILING
NATCHEZ TRACE PARKWAY
OVER STATE ROUTE 99
STATION 24+93.51
LEWIS COUNTY
2015

JOHN S. HASTINGS — STATE OF TENNESSEE — 06/09/2015

CORRECT Wayne G. Sieger
ENGINEER OF STRUCTURES

DESIGNED BY	J.S. HASTINGS	DATE	12-14
DRAWN BY	KEVIN MARTINKO	DATE	1-15
SUPERVISED BY	J.S. HASTINGS	DATE	1-15
CHECKED BY	J.S. HASTINGS	DATE	5-15

BR-119-52