CONST. NO. 51005-3230-14

PROJECT NO.	YEAR	SHEET NO.
NH-99(51)	2015	

REVISIONS

NO.	DATE	BY	BRIEF DESCRIPTION

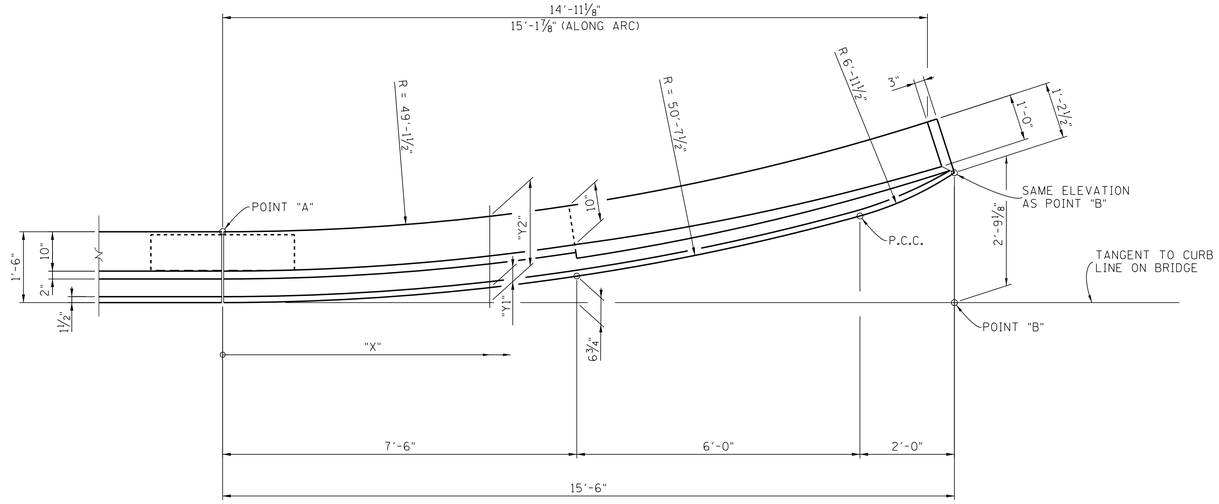

PLAN

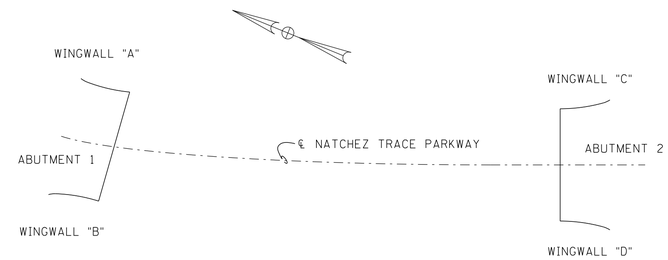

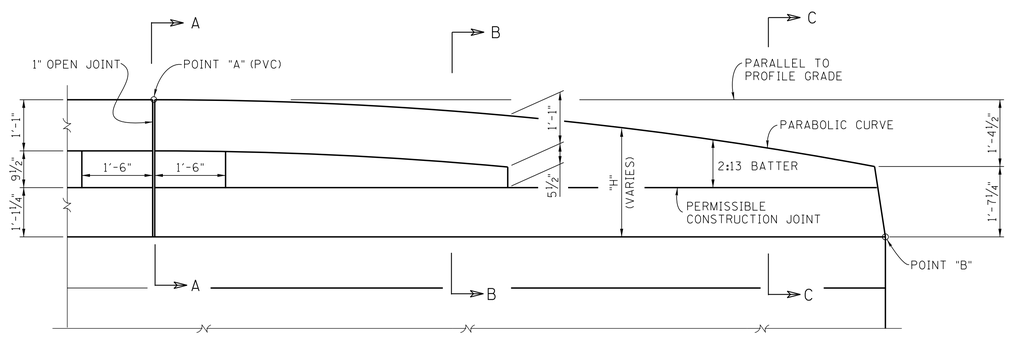

ELEVATION

WINGWALL OFFSETS			
"X"	"Y1"	"Y2"	"H"
0	0	1'-6"	2'-11¾"
2'-0"	0⅝"	1'-6½"	2'-11½"
4'-0"	2"	1'-8⅛"	2'-10⅝"
6'-0"	4⅜"	1'-10½"	2'-9¼"
7'-6"	6¾"	2'-0¾"	2'-7⅞"
9'-6"	10⅝"	2'-5⅛"	2'-5½"
11'-0"	1'-2⅝"	2'-9⅛"	2'-3½"
12'-6"	1'-6⅞"	3'-1⅜"	2'-1"
13'-6"	1'-10"	3'-5"	1'-11¼"
14'-0"	2'-0"	3'-6½"	1'-10¼"
14'-6"	2'-2⅜"	3'-8⅛"	1'-9¼"
14'-11"	——	3'-10"	——
15'-0"	2'-5½"	——	1'-8¼"
15'-6"	2'-9⅛"	——	——

WINGWALL	POINT "A" ELEVATION	POINT "B" ELEVATION
"A"	644.97	641.40
"B"	647.08	643.60
"C"	660.24	657.63
"D"	660.24	657.63

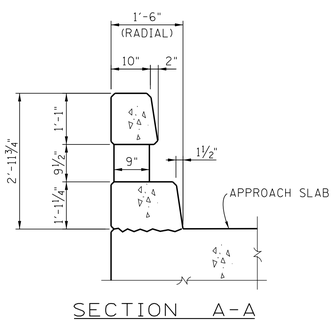

SECTION A-A

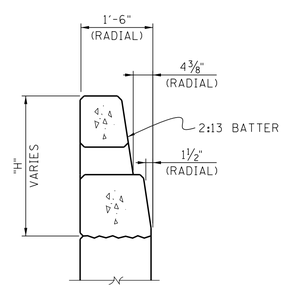

SECTION B-B

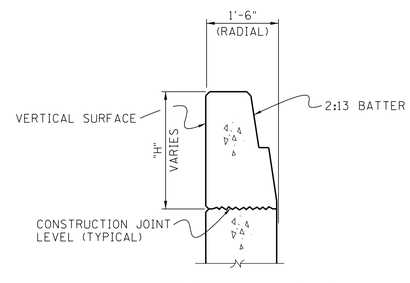

SECTION C-C

DESIGNED BY J.S. HASTINGS DATE 12-14
DRAWN BY KEVIN MARTINKO DATE 1-15
SUPERVISED BY J.S. HASTINGS DATE 1-15
CHECKED BY J.S. HASTINGS DATE 5-15

JOHN S. HASTINGS
STATE OF TENNESSEE
06/01/2016

CORRECT Wayne G. Sieger
ENGINEER OF STRUCTURES

STATE OF TENNESSEE
DEPARTMENT OF TRANSPORTATION

BRIDGE NO. 1
END OF WING DETAIL
NATCHEZ TRACE PARKWAY
OVER
STATE ROUTE 99
STATION 24+93.51
LEWIS COUNTY
2015

BR-119-55