CONST. NO. 51005-3230-14		
PROJECT NO.	YEAR	SHEET NO.
NH-99(51)	2015	

REVISIONS

NO.	DATE	BY	BRIEF DESCRIPTION

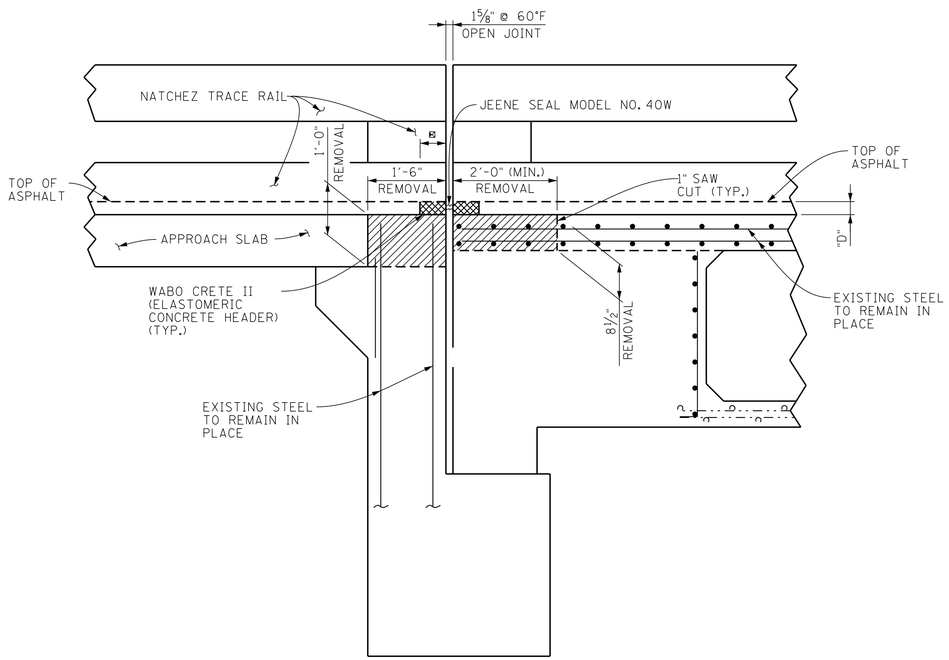

CONCRETE REMOVAL DETAIL

NOTE: CONCRETE TO BE SHRINKAGE COMPENSATING CONCRETE f'c = 4,000 psi @ 28 STRENGTH.

NOTE: SHADED CONCRETE SHALL BE REMOVED AND ALL REBAR WHICH EXTENDS FROM SLAB INTO THE ENDWALL SHALL BE CUT. ALL COST OF SAW CUTTING, EXISTING CONCRETE REMOVAL, REMOVING REBAR, LABOR AND ANY MISCELLANEOUS MATERIAL NECESSARY TO COMPLETE THE REPAIRS AS SHOWN IN THESE DETAILS TO BE INCLUDED UNDER ITEM NO. 604-10.02.

"D"= DEPTH OF ELASTOMERIC CONCRETE

⊠ DENOTES: THE WIDTH OF THE HEADER SHALL BE AT LEAST TWICE THE DEPTH "D".

NOTE: JOINT SHALL TURN UP TO FOLLOW CURB OF RAIL.

NOTE: PNUEMATIC HAMMERS HEAVIER THAN NOMINAL 60 POUNDS SHALL NOT BE USED. CHIPPING HAMMERS OF THE 15 POUND CLASS SHALL BE USED TO REMOVE CONCRETE FROM BENEATH ANY REINFORCING STEEL.

NOTE: CONTRACTOR SHALL FOLLOW MANUFACTURER'S INSTALLATION PROCEDURES FOR INSTALLATION OF JEENE EXPANSION JOINT.

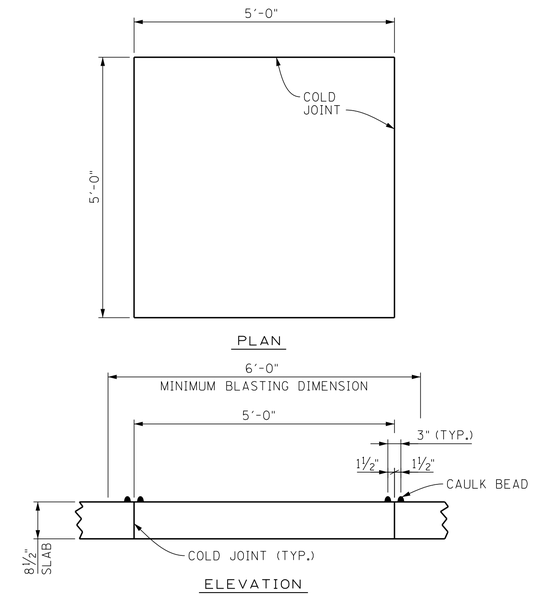

TEMPORARY ACCESS OPENING

NOTE: SEE SPECIAL PROVSION 604CR REPAIR OF BRIDGE DECK CRACKS.

NOTE: ONCE ASPHALT AND SEAL ARE REMOVED, CONTRACTOR SHALL REMOVE DEBRIS AND DIRT, BY SANDBLASTING OR SHOTBLASTING. THE AREA SHALL BE BLOWN WITH COMPRESSED AIR SO THAT THE SURFACE IS DRY AND FREE OF DUST, DIRT, ASPHALT, AND OTHER CONTAMINANTS, ONCE BLASTING IS COMPLETE. ALL COSTS SHALL BE INCLUDED IN ITEM NO. 617-02 AND 617-05.

NOTE: THE RESIN SHALL BE PONDED OVER THE CRACK BETWEEN CAULK BEADS UNTIL ABSORBTION STOPS. CAULK SHALL BE REMOVED PRIOR TO INSTALLATION OF SEAL. ALL COSTS SHALL BE INCLUDED IN ITEM NO. 617-02 AND 617-05.

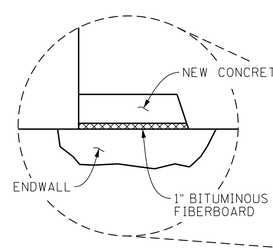

DETAIL "A"

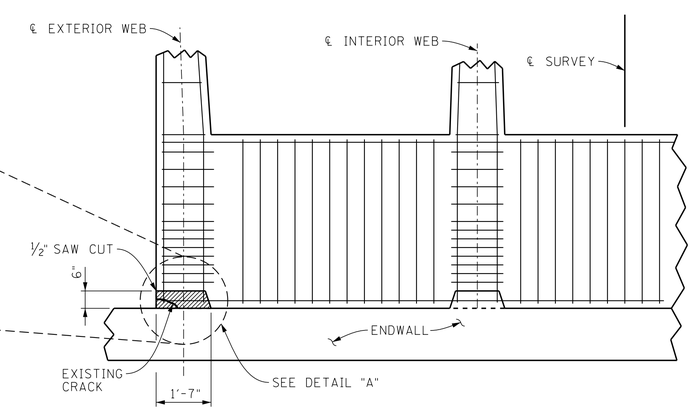

ABUTMENT DIAPHRAGM

NOTE: CONCRETE TO BE SHRINKAGE COMPENSATING CONCRETE f'c = 4,000 psi @ 28 STRENGTH.

NOTE: SHADED CONCRETE SHALL BE REMOVED FROM TOP OF ABUTMENT BEAM TO BOTTOM OF SLAB. ALL COST OF SAW CUTTING, EXISTING CONCRETE REMOVAL, LABOR, AND ANY MISCELLANEOUS MATERIALS NECESSARY TO COMPLETE THE REPAIRS AS SHOWN IN THESE DETAILS TO BE INCLUDED IN ITEM NO. 604-10.02

NOTE: CHIPPING HAMMERS OF THE 15 POUND CLASS SHALL BE USED TO REMOVE CONCRETE.

NOTE: CONTRACTOR SHALL UTILIZE EXTREME CARE TO PROTECT POST TENSIONING DEVICES. ANY DAMAGE TO THE POST TENSIONING SYSTEM SHALL BE REPAIRED AT THE CONTRACTOR'S EXPENSE.

STATE OF TENNESSEE
DEPARTMENT OF TRANSPORTATION

MISCELLANEOUS DETAILS
NATCHEZ TRACE PARKWAY
OVER STATE ROUTE 99
STATION 24+93.51
LEWIS COUNTY
2015

DESIGNED BY	J.S. HASTINGS	DATE	12-14
DRAWN BY	KEVIN MARTINKO	DATE	1-15
SUPERVISED BY	J.S. HASTINGS	DATE	1-15
CHECKED BY	J.S. HASTINGS	DATE	5-15

CORRECT Wayne G. Sieger
ENGINEER OF STRUCTURES

BR-119-54