TYPE	YEAR	PROJECT NO.	SHEET NO.
REPAIR	2015	NH-99(51)	2B

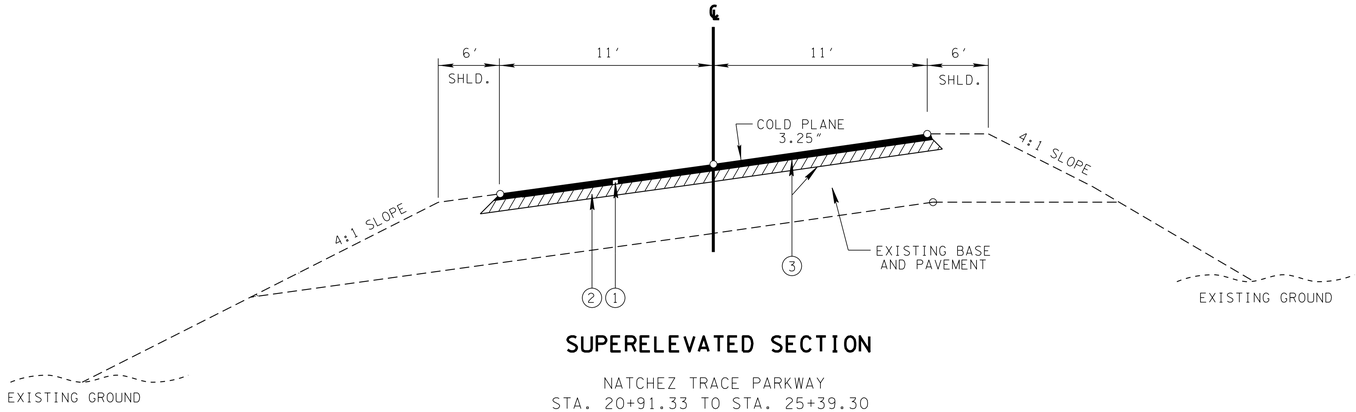

SUPERELEVATED SECTION

NATCHEZ TRACE PARKWAY
STA. 20+91.33 TO STA. 25+39.30

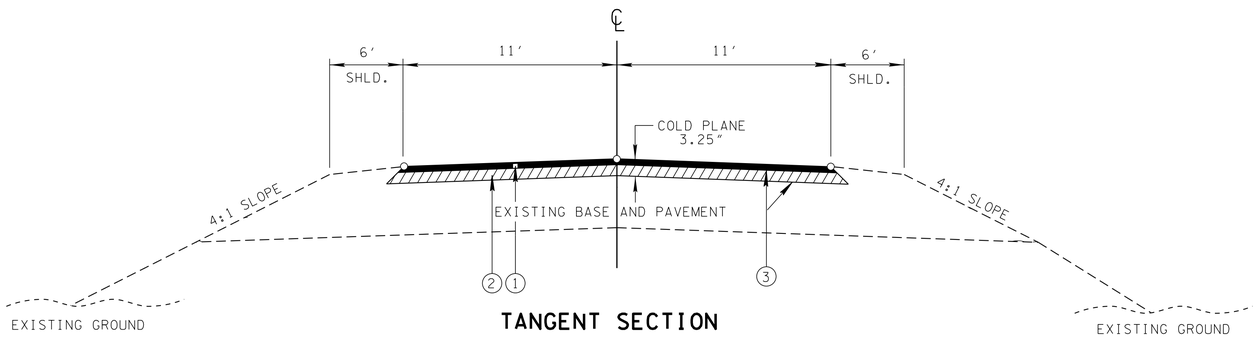

TANGENT SECTION

NATCHEZ TRACE PARKWAY
STA. 25+39.30 TO STA. 28+96.33

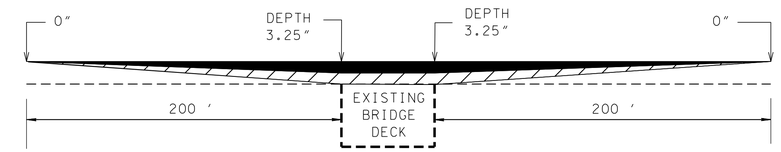

COLD PLANING AND PAVENMENT TRANSITION DETAIL FOR TEMPORARY TRAFFIC CONTROL OPERATION

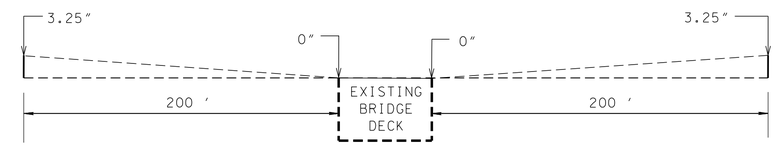

COLD PLANING DETAIL FOR FINAL PAVEMENT (PHASE I)

PAVING SCHEDULE	
1	SURFACE @ 1.25" \ THICK (APPROX. 132.5 LBS/SY) 411-01.10 ASC MIX (PG64-22) GRADING D
2	BLACK BASE @ 2.00" \ THICK (APPROX. 226.0 LBS/SY) 307-01.08 ASPHALT CONCRETE MIX (PG64-22) (BPMB-HM) GRADING B-M2
3	TACK COAT @ 0.07 GAL/SY (GENERAL USE) 0.10 GAL/SY (MILLING – COLD PLANE) 403-01 BITUMINOUS MATERIAL FOR TACK COAT (TC)

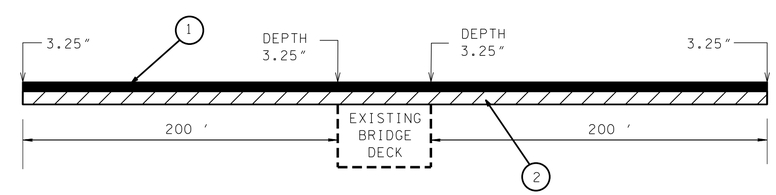

DETAIL FOR FINAL PAVEMENT (PHASE II)

SEALED BY

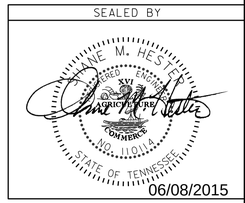

06/08/2015

STATE OF TENNESSEE
DEPARTMENT OF TRANSPORTATION

TYPICAL SECTIONS AND PAVEMENT SCHEDULE

08-JUN-2015 10:30
\\JU03WF01.tdot.state.tn.us\03Shared\SURVEY\DESIGN\PIN 100301.01 Lewis Co. SR-99 Traffic Control for Bridge Repair\Bridge Repair\100301-03-002B TypicalSections.dgn