TENNESSEE D.O.T.	DESIGN DIVISION	FILE NO.

TYPE	YEAR	PROJECT NO.	SHEET NO.
R.O.W.	2012	STP-150(4)	4

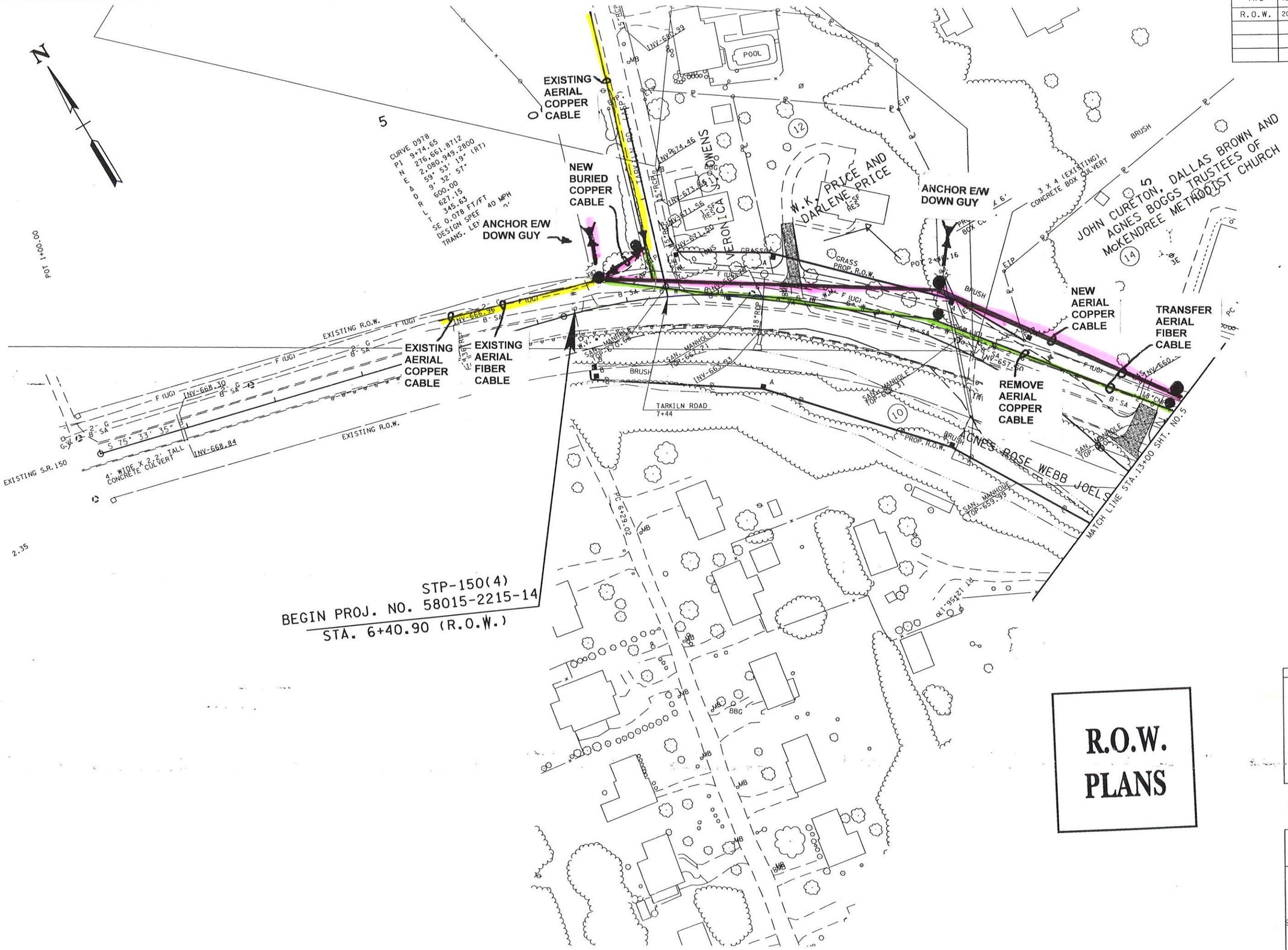

R.O.W. PLANS

SEALED BY

COORDINATES ARE NAD/83(1995), ARE DATUM ADJUSTED BY THE FACTOR OF 0.99999 AND TIED TO THE TGRN. ALL ELEVATIONS ARE REFERENCED TO THE NAVD 1988.

STATE OF TENNESSEE
DEPARTMENT OF TRANSPORTATION

PRESENT LAYOUT

STA.1 + 00 TO STA.13 + 00

SCALE: 1"=50'

31-MAY-2012 14:22
\\JJU02WF01.tdot.state.tn.us\02Shared\Design County Folders\Marion\SR150toSR28\FINALSET\Present04.SHT

TYPE	YEAR	PROJECT NO.	SHEET NO.
R.O.W.	2012	STP-150(4)	10

TENNESSEE D.O.T.
DESIGN DIVISION
FILE NO.

R.O.W. PLANS

ANCHOR E/W DOWN GUY
EXISTING BURIED COPPER CABLE
EXISTING BURIED FIBER CABLE
NEW AERIAL FIBER CABLE
NEW BURIED COPPER CABLE
NEW (2) 4" CONDUIT
ABANDON BURIED COPPER CABLE
ABANDON BURIED FIBER CABLE
TRANSFER BURIED FIBER CABLE TO AERIAL STRAND
CONCRETE ENCASE CONDUIT TO REMAIN
EXISTING BURIED COPPER CABLE / DUCT
EXISTING AERIAL FIBER CABLE
TRANSFER AERIAL FIBER CABLE
ANCHOR E/W DOWN GUY
NEW AERIAL FIBER CABLE
ANCHOR E/W DOWN GUY
TRANSFER AERIAL FIBER CABLE
REMOVE AERIAL COPPER CABLE
NEW AERIAL COPPER CABLE

ALLEY VIEW HWY. STA. 0+77.07
N 276748.3608
E 2081758.0092

BETSY PACK DR. STA. 13+74.52
N 275586.7638
E 2081317.4997

THE CITY OF SOUTH PITTSBURG
WILLIAM E. NELSON'S TRUSTEE
JOHN L. HARGIS AND WIFE, CAROLYN F. HARGIS
BEN BUMPUS AND WIFE, KRISTI BUMPUS
BENNY BIMBALL PARKER AND WIFE, TERESITA T. PARKER
DEWITT LANDY SIMERL AND WIFE, MARY
JOHN CURETON, D AGNES BOGGS McKENDREE ME
BROWN TEE OF ST CHURCH
SAM FERRELL III
JOHN H. FERRELL III, MARY FERRELL, DELTA B. FERRELL

SEALED BY

COORDINATES ARE NAD/83(1995), ARE DATUM ADJUSTED BY THE FACTOR OF 0.99999 AND TIED TO THE TGRN. ALL ELEVATIONS ARE REFERENCED TO THE NAVD 1988.

BETSY PACK DRIVE

STATE OF TENNESSEE
DEPARTMENT OF TRANSPORTATION

PRESENT LAYOUT

STA.00+77 TO STA. 13+74

SCALE: 1"= 50'

31-MAY-2012 14:26
\\J02WF01.tdot.state.tn.us\J02Shared\Design County Folders\Marion\SR150toSR28\FINALSET\PRESENT10.SHT

TENNESSEE D.O.T.
DESIGN DIVISION
FILE NO.

TYPE	YEAR	PROJECT NO.	SHEET NO.
R.O.W.	2012	STP-150(4)	4

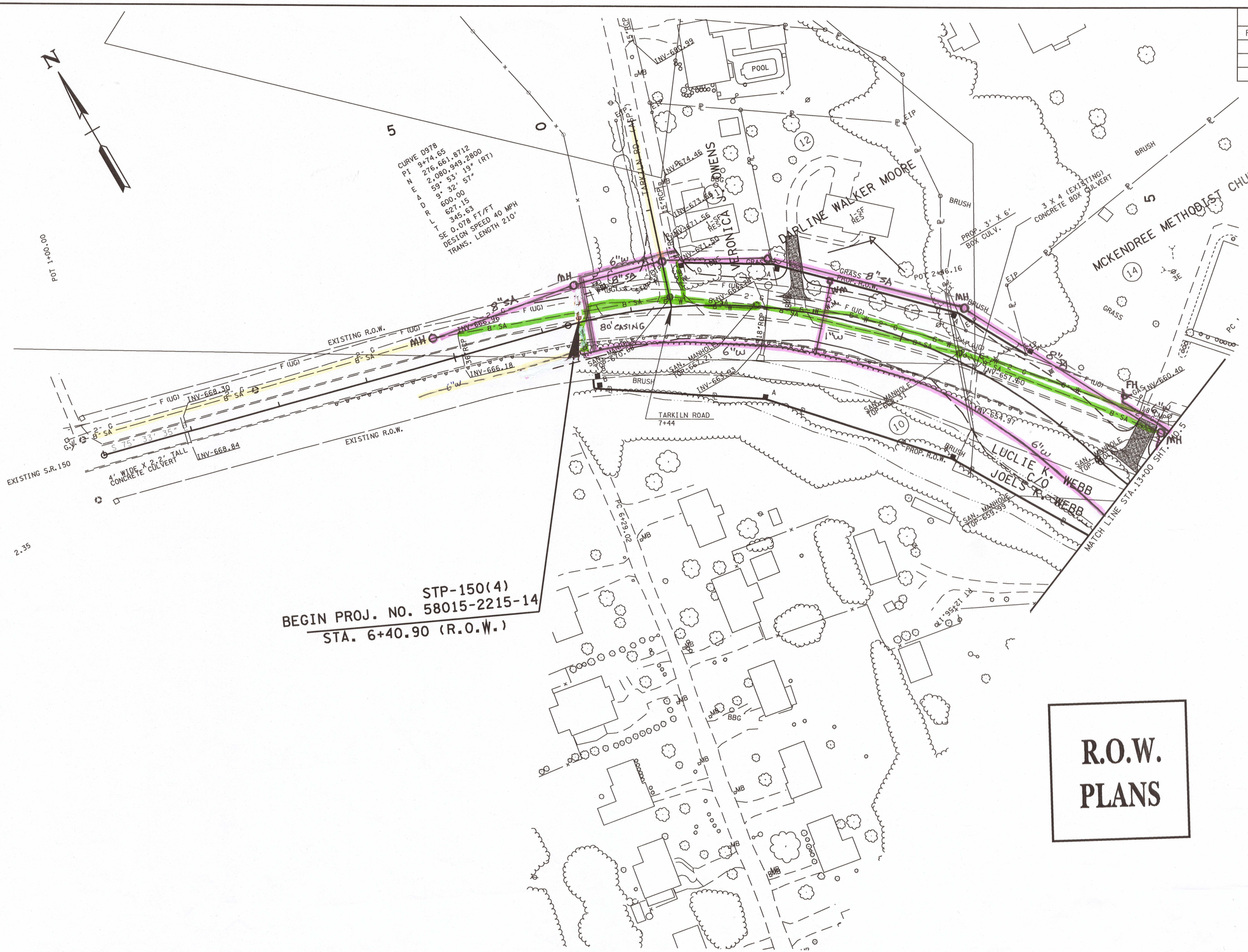

R.O.W. PLANS

SEALED BY

COORDINATES ARE NAD/83(1995), ARE DATUM ADJUSTED BY THE FACTOR OF 0.99999 AND TIED TO THE TGRN. ALL ELEVATIONS ARE REFERENCED TO THE NAVD 1988.

STATE OF TENNESSEE
DEPARTMENT OF TRANSPORTATION

PRESENT LAYOUT

STA.1 + 00 TO STA.13 + 00

SCALE: 1"=50'

30-APR-2012 11:26
\\J02WFO1.tdot.state.tn.us\02Shared\Design County Folders\Marion\SR150fromSR150toSR28\FINALSET\Present04.SHT

TENNESSEE D.O.T.	
DESIGN DIVISION	
FILE NO.	

TYPE	YEAR	PROJECT NO.	SHEET NO.
R.O.W.	2012	STP-150(4)	5

SEALED BY

COORDINATES ARE NAD/83(1995), ARE DATUM ADJUSTED BY THE FACTOR OF 0.99999 AND TIED TO THE TGRN. ALL ELEVATIONS ARE REFERENCED TO THE NAVD 1988.

STATE OF TENNESSEE
DEPARTMENT OF TRANSPORTATION

PRESENT LAYOUT

STA.13 +00 TO STA.26+00

SCALE: 1"=50'

30-APR-2012 11:26
\\JJ02WFOL1dot.state.tn.us\02Shared\Design County Folders\Marion\SR150fromSR150toSR28\FINALSET\Present05.SHT

TYPE	YEAR	PROJECT NO.	SHEET NO.
R.O.W.	2012	STP-150(4)	9

TENNESSEE D.O.T.
DESIGN DIVISION
FILE NO.

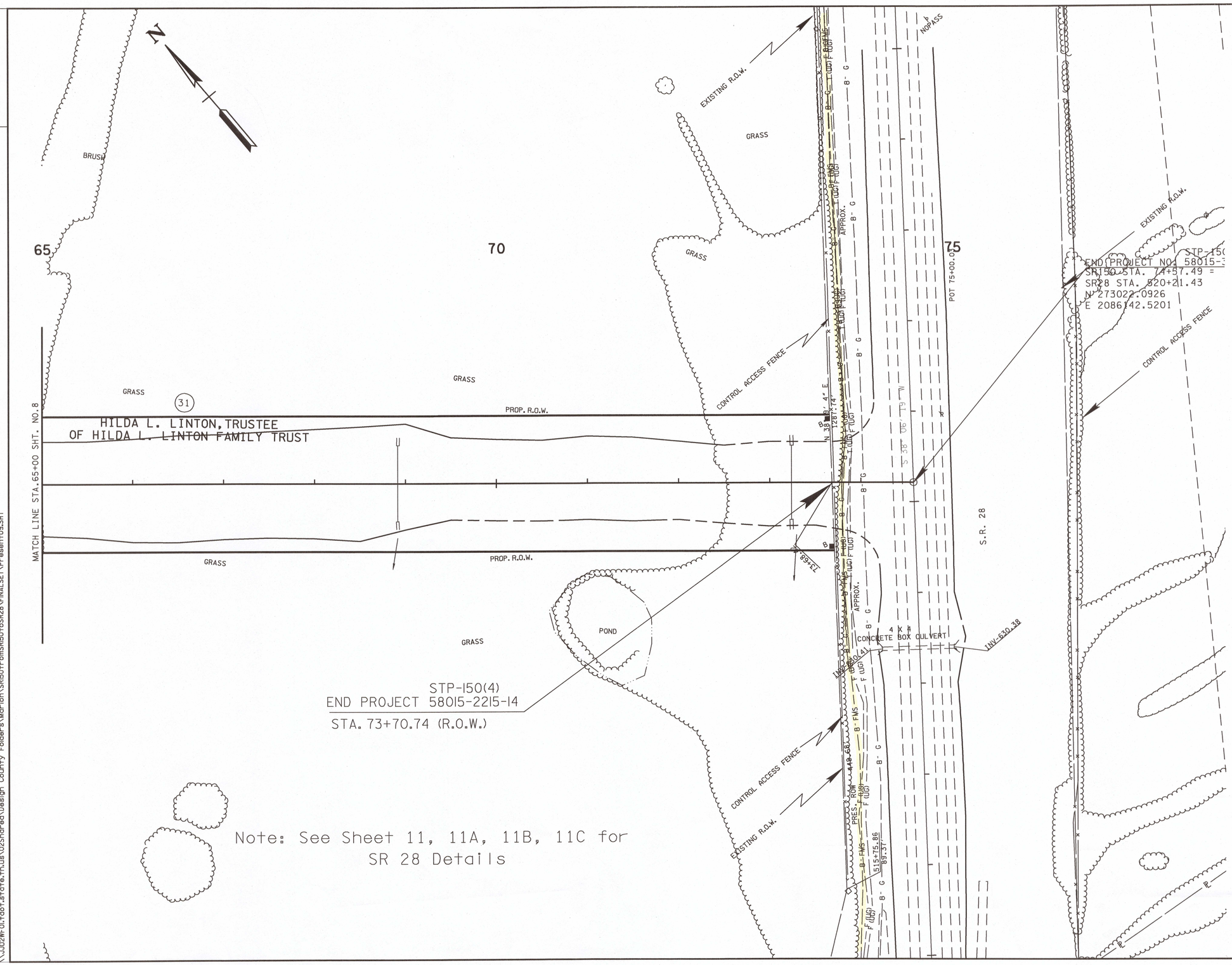

R.O.W. PLANS

SEALED BY

COORDINATES ARE NAD/83(1995), ARE DATUM ADJUSTED BY THE FACTOR OF 0.99999 AND TIED TO THE TGRN. ALL ELEVATIONS ARE REFERENCED TO THE NAVD 1988.

STATE OF TENNESSEE
DEPARTMENT OF TRANSPORTATION

PRESENT LAYOUT

STA. 65+00 TO STA. 75+00

SCALE: 1"= 50'

30-APR-2012 11:30
\\JJ02WF01.tdot.state.tn.us\02Shared\Design County Folders\Marion\SR150fromSR150toSR28\FINALSET\Present09.SHT

TENNESSEE D.O.T.
DESIGN DIVISION
FILE NO. ___

TYPE	YEAR	PROJECT NO.	SHEET NO.
CONST.	2013	58015-2215-14	U4-1

INDEX OF DRAWINGS

SHEET NO. DESCRIPTIONS

U4-1.....INDEX OF SHEETS & ESTIMATED QUANTIES
U4-2.....LEGEND & GENERAL NOTES
U4-3.....REQUIRED EASEMENTS
U4-4.....STA. 1+00 TO STA. 13+00
U4-5.....STA. 13+00 TO STA. 26+00
U4-6.....STA. 26+00 TO STA. 39+00
U4-7.....STA. 39+00 TO STA. 52+00
U4-8.....STA. 52+00 TO STA. 65+00
U4-9.....STA. 65+00 TO STA. 75+00
U4-10.....STA. 0+77 TO STA. 13+74
U4-11.....STA. 513+00 TO STA. 526+00
U4-12.....ROAD CROSSINGS
U4-13.....ROAD CROSSINGS
U4-14.....GAS DETAILS

ESTIMATED UTILITY QUANTITIES

ITEM NO.	DESCRIPTION	UNIT	Project No. 1: 58015-2210-14 QUANTITY	% Utility Betterment	%Project Public	%Project Private
791-01.02	2IN STEEL GAS MAIN	L.F.	825	0.00%	100.00%	0.00%
791-01.05	6IN STEEL GAS MAIN	L.F.	1081	0.00%	100.00%	0.00%
791-01.09	3/4IN STEEL GAS MAIN	L.F.	140	0.00%	100.00%	0.00%
791-04.20	HDD 2IN STEEL PIPE - UNCONSOLIDATED	L.F.	112	0.00%	100.00%	0.00%
791-04.27	HDD 3/4IN STEEL PIPE - UNCONSOLIDATED	L.F.	40	0.00%	100.00%	0.00%
791-06.31	CONNECT TO 2IN EX. STL MAIN W/ STOPPLE	EACH	3	0.00%	100.00%	0.00%
791-06.33	CONNECT TO 6IN EX. STL MAIN W/ STOPPLE	EACH	2	0.00%	100.00%	0.00%
791-07.09	2IN STEEL GAS VALVE ASSEMBLY	EACH	1	0.00%	100.00%	0.00%
791-07.11	26N STEEL GAS VALVE ASSEMBLY	EACH	2	0.00%	100.00%	0.00%
791-09.05	RESTORE ASPHALT	S.Y.	5	0.00%	100.00%	0.00%
					100.00%	0.00%

MARION COUNTY GAS DEPARTMENT
138 CEDAR AVENUE
SOUTH PITTSBURG, TENNESSEE 37380
DONALD BLANSETT, MANAGER
PHONE : (423) 837-7164
FAX : (423) 837-0131
EMAIL ADDRESS : mngdon@mariongas.com

SEALED BY

ROBERT D. STIGALL
REGISTERED ENGINEER
AGRICULTURE
COMMERCE & INDUSTRY
No. 18891
STATE OF TENNESSEE

7-14-14

STIGALL ENGINEERING ASSOCIATES, INC.

MARION COUNTY
GAS DEPARTMENT

GAS RELOCATION

INDEX OF SHEETS & ESTIMATED QUANTIES

SCALE: NONE

TENNESSEE D.O.T.
DESIGN DIVISION
FILE NO. ____

TYPE	YEAR	PROJECT NO.	SHEET NO.
CONST.	2013	58015-2215-14	U4-2

SYMBOLOGY AND LINESTYLES

EXISTING UTILITIES

6" W	WATER
6" G	GAS
6" SA	SEWER
6" FMS	FORCE MAIN
C (UG)	CABLE (UG)
F (UG)	FIBER OPTIC (UG)
P/T	POWER/TELEPHONE
P	POWER
P (UG)	POWER (UG)
P/C	POWER/CABLE
P/TV	POWER/TV
T/C	TELEPHONE/CABLE
T	TELEPHONE
T (UG)	TELEPHONE (UG)
TV (UG)	TELEVISION (UG)
TV	TELEVISION
	FIRE HYDRANT
G.M.	GAS METER
G.V.	GAS VALVE
	MANHOLE
	SEWER MANHOLE
S.V.	SEWER VALVE
TEL. PED.	TELEPHONE PEDESTAL
	POWER POLE
	POWER POLE w/LIGHT
W.M.	WATER METER
W.V.	WATER VALVE

PROPOSED UTILITIES & MODIFICATIONS

6" G	PROPOSED GAS LINE
6" G RIP	EX. GAS LINE (RETIRED IN PLACE)
G 6" G	EX. GAS LINE (TO BE REMOVED)
6" G	EX. GAS LINE (TO REMAIN)
	PROPOSED GAS VALVE
	PROPOSED GAS REDUCER
	PROPOSED GAS METER

Project Notes

1. All materials, methods, and/or integral materials outlined in the utility specifications or drawings necessary to provide a complete and functional installation must be included in the Unit Price for the associated Utility Work item.

2. The contractor must maintain all services during the construction of the relocated facility. Any costs associated with installation of required temporary service lines due to the roadway construction sequence of work (i.e., cuts, fills, phasing, etc.) shall be included in the cost of the permanent utility items.

3. It shall be the responsibility of the Contractor to lay out all the facilities being relocated within the contract with regards to horizontal and vertical location..

4. For buried utilities, the contractor shall be required to provide to the Utility upon completion of the relocation work a set of as-built drawings for their records. These as-built drawings should be prepared as the progresses to ensure their accuracy.

5. Driveway, sidewalk and roadway temporary restoration shall be part of the in-place cost of placing the utility item within the ROW.

6. Any excavation of the stream channel area shall be separated from flowing water and accomplished during low flow conditions. This shall be accomplished by the use of flumes, lined diversion channel with sandbag berm, diversion pipe with sandbag dam at pipe inlet, or in some cases cofferdams. Alternatively, based on field conditions and contractor selection, the utility relocation may be accomplished using horizontal bore technology with no stream channel impacts.

7. All gas lines shall be installed with a minimum cover of 36".

SEALED BY

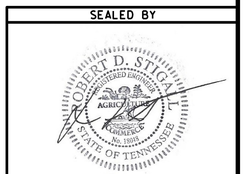

STIGALL ENGINEERING ASSOCIATES, INC.

MARION COUNTY
GAS DEPARTMENT

GAS RELOCATION

LEGENDS & GENERAL NOTES

SCALE: NONE

TENNESSEE D.O.T.
DESIGN DIVISION
FILE NO. ___

TYPE	YEAR	PROJECT NO.	SHEET NO.
CONST.	2013	58015-2215-14	U4-3

MARION COUNTY UTILITY EASEMENT ACQUISITION TABLE

TRACT NO.	PROPERTY OWNERS	COUNTY RECORDS				UTILIZE EXISTING UTILITY EASEMENT	PROPOSED EASEMENT (ALL DIMENSIONS ARE FROM CENTERLINE OF EASEMENT - EXCLUDING TOTALS)							
		TAX	PARCEL	DEED DOCUMENT REFERENCE		TOTAL (LINEAL FEET)	PERMANENT (FEET)			PERMANENT	TEMPORARY (FEET)			TEMPORARY
		MAP NO.	NO.	BK.	PAGE	APPROX.	LEFT SIDE	RIGHT SIDE	TOTAL	TOTAL (SQUARE FEET)	LEFT SIDE	RIGHT SIDE	TOTAL	TOTAL (SQUARE FEET)

NO EASEMENTS REQUIRED FOR THIS PROJECT

SEALED BY

ROBERT D. STIGALL
REGISTERED ENGINEER
AGRICULTURE
CIVIL
STATE OF TENNESSEE

7-14-14

STIGALL ENGINEERING ASSOCIATES, INC.

MARION COUNTY
GAS DEPARTMENT

GAS RELOCATION

REQUIRED EASEMENTS

SCALE: NONE

TENNESSEE D.O.T.
DESIGN DIVISION
FILE NO.

TYPE	YEAR	PROJECT NO.	SHEET NO.
CONST.	2013	58015-2215-14	U4-4

Rev. 8/8/2012
Label parent Tract #1 and place Z bar to acquisition area of Tract #10. Extend Tarkiln Rd. center line, add proposed slope and ROW lines. Add Tract # 52.

Rev. 09/12/2012
Sta. 11+00 to 13+00, change toe of slope due to changing side slopes to 2:1 from 6:1 on the South side of existing SR 150. Label environmental boundaries STR-1 and STR-2. Sta. 6+00 to 13+00, place High Visibility Fencing on South side of existing SR 150. Relocate ROW markers to the ROW break line and relabel existing ROW to present ROW.

Rev. 10/31/2013
Updated begin project & ROW take for Tract's 12, 13 & 52. Update property owner for Tract 10.

Rev. 12/06/2013
Show driveway slopes.

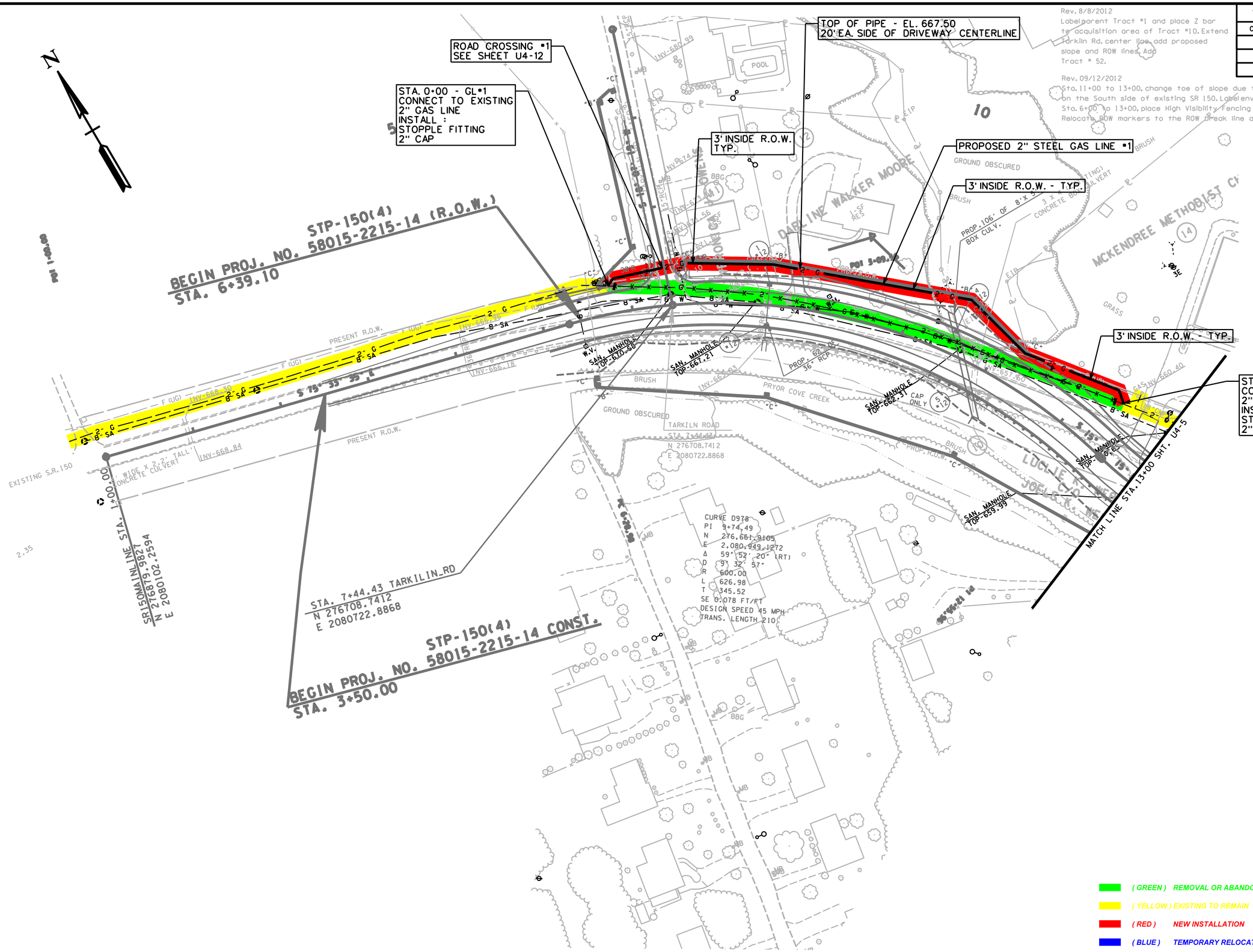

(GREEN) REMOVAL OR ABANDONED
(YELLOW) EXISTING TO REMAIN
(RED) NEW INSTALLATION
(BLUE) TEMPORARY RELOCATION

SEALED BY

ROBERT D. STIGALL
REGISTERED ENGINEER
AGRICULTURE
No. 18818
STATE OF TENNESSEE
7-14-14

STIGALL ENGINEERING ASSOCIATES, INC.

MARION COUNTY
GAS DEPARTMENT

GAS RELOCATION

STA. 1+00 TO STA. 13+00

SCALE: 1" = 50'

TENNESSEE D.O.T.
DESIGN DIVISION
FILE NO.

(GREEN) REMOVAL OR ABANDONED
(YELLOW) EXISTING TO REMAIN
(RED) NEW INSTALLATION
(BLUE) TEMPORARY RELOCATION

Rev. 8/8/2012
Extend the proposed ROW line, South of proposed SR 150, West to the existing ROW line for Betsy Pack Dr.

TYPE	YEAR	PROJECT NO.	SHEET NO.
CONST.	2013	58015-2215-14	U4-5

NOTE: See Sheets 10, 10A, 10B, & 10C for Betsy Pack Drive

Rev. 09/12/2012
Sta. 13+00 to 15+00, change toe of slope due to changing side slope to 2:1 from 6:1 on the South side of existing SR 150.
Label environmental boundaries STR-1 and WWC-1
Sta. 13+00 to 21+45, place High Visibility Fencing on the South side of existing SR 150 and proposed SR 150. Relocate ROW markers and relabel existing ROW to present ROW.

Rev. 10/31/2013
Update ROW take for Tracts 14 & 16.
Update property owner for Tract 16.

Rev. 12/06/2013
Show driveway slopes.

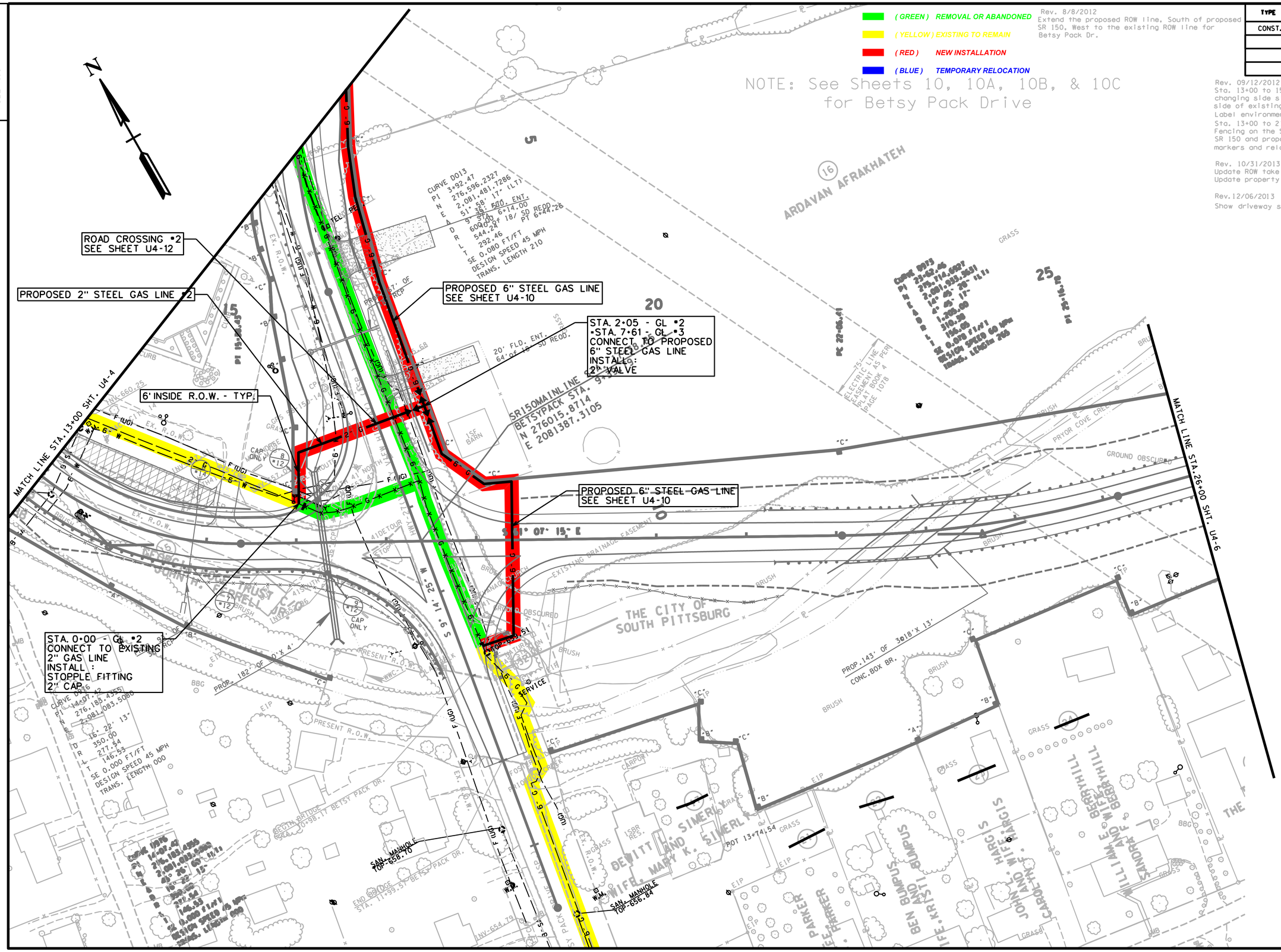

SEALED BY

ROBERT D. STIGALL
REGISTERED ENGINEER
AGRICULTURE
NO. 100
STATE OF TENNESSEE
7-14-14

STIGALL ENGINEERING ASSOCIATES, INC.

MARION COUNTY
GAS DEPARTMENT

GAS RELOCATION

STA. 13+00 TO STA. 26+00

SCALE: AS SHOWN

TENNESSEE D.O.T.
DESIGN DIVISION
FILE NO.

Rev. 8/8/2012
Change Tract #20 to Tract#18 on the North Side of proposed SR 150. Place a Z-bar to connect divided Tract #18.

Rev. 09/12/2012
Label environmental boundaries STR-1 and WWC-2. Relocate ROW markers.

Rev. 10/31/2013
Update ROW take for Tract's 18, 19, 20 & 27.
Update property owner for Tract 16.

TYPE	YEAR	PROJECT NO.	SHEET NO.
CONST.	2013	58015-2215-14	U4-6

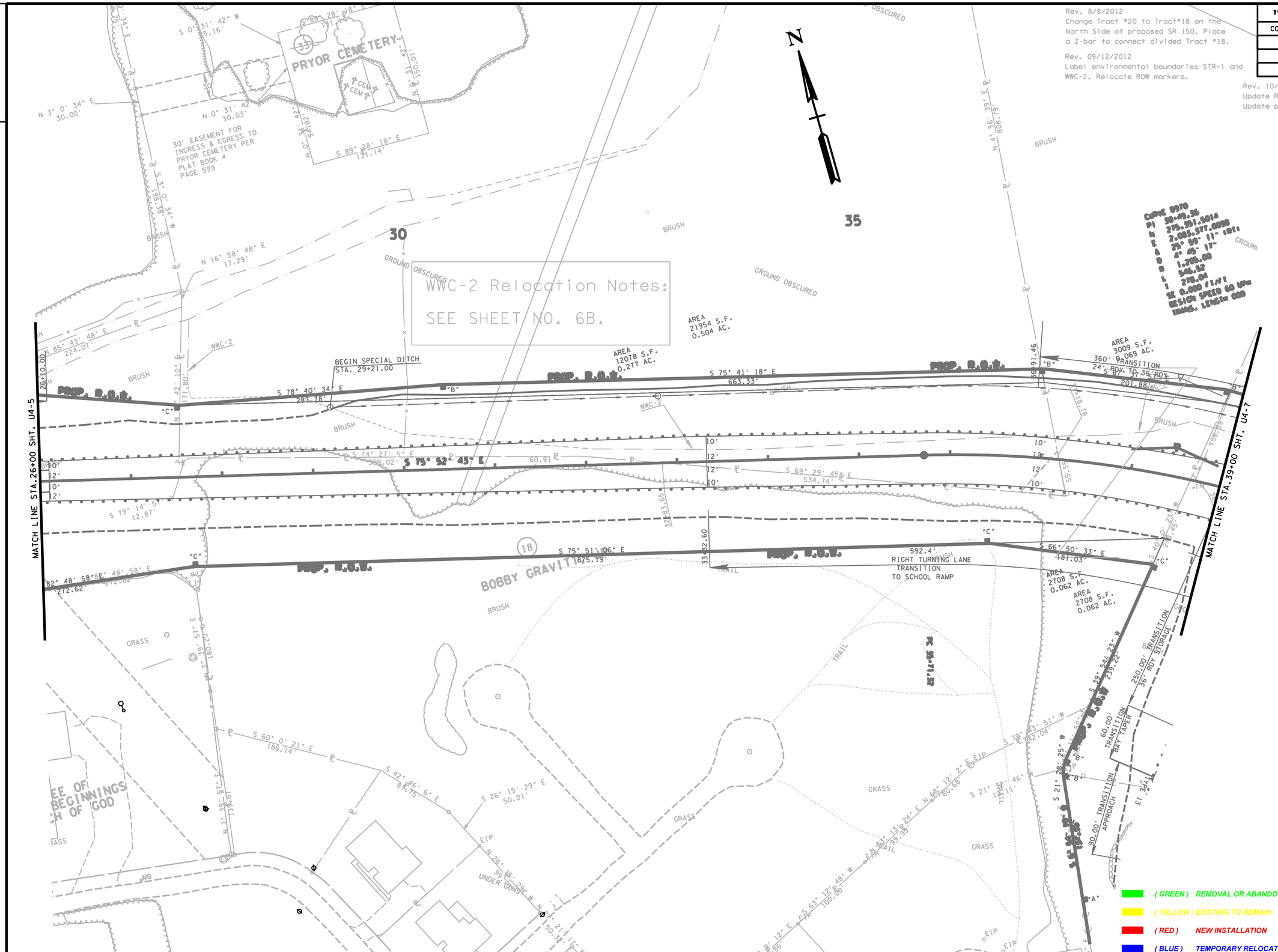

(GREEN) REMOVAL OR ABANDONED
(YELLOW) EXISTING TO REMAIN
(RED) NEW INSTALLATION
(BLUE) TEMPORARY RELOCATION

SEALED BY

ROBERT D. STIGALL
REGISTERED ENGINEER
AGRICULTURE
No. 19014
STATE OF TENNESSEE

7-14-14

STIGALL ENGINEERING ASSOCIATES, INC.

MARION COUNTY
GAS DEPARTMENT

GAS RELOCATION

STA. 26+00 TO STA. 39+00

SCALE: 1"=50'

TENNESSEE D.O.T.
DESIGN DIVISION
FILE NO.

TYPE	YEAR	PROJECT NO.	SHEET NO.
CONST.	2013	58015-2215-14	U4-7

(GREEN) REMOVAL OR ABANDONED
(YELLOW) EXISTING TO REMAIN
(RED) NEW INSTALLATION
(BLUE) TEMPORARY RELOCATION

Revised 06/27/2012
Relocate Tract 26 left private drive from Sta.48+50 to Sta. 49+16.

Rev. 09/12/2012
Label environmental boundaries STR-3, STR-4, STR-5, WWC-2 and swales. Relocate ROW markers.

Revised 10/11/2012
Add wetlands WTL-1, WTL-2, WTL-3 wetlands impacts, cross drains, and High Visibility Fencing.

Revised 10/31/2013
Update ROW take for Tract's 20, 26 & 27.

Revised 11/20/2013
Acquire additional ROW for bridge rip-rap

Rev. 12/06/2013
Show driveway slopes.

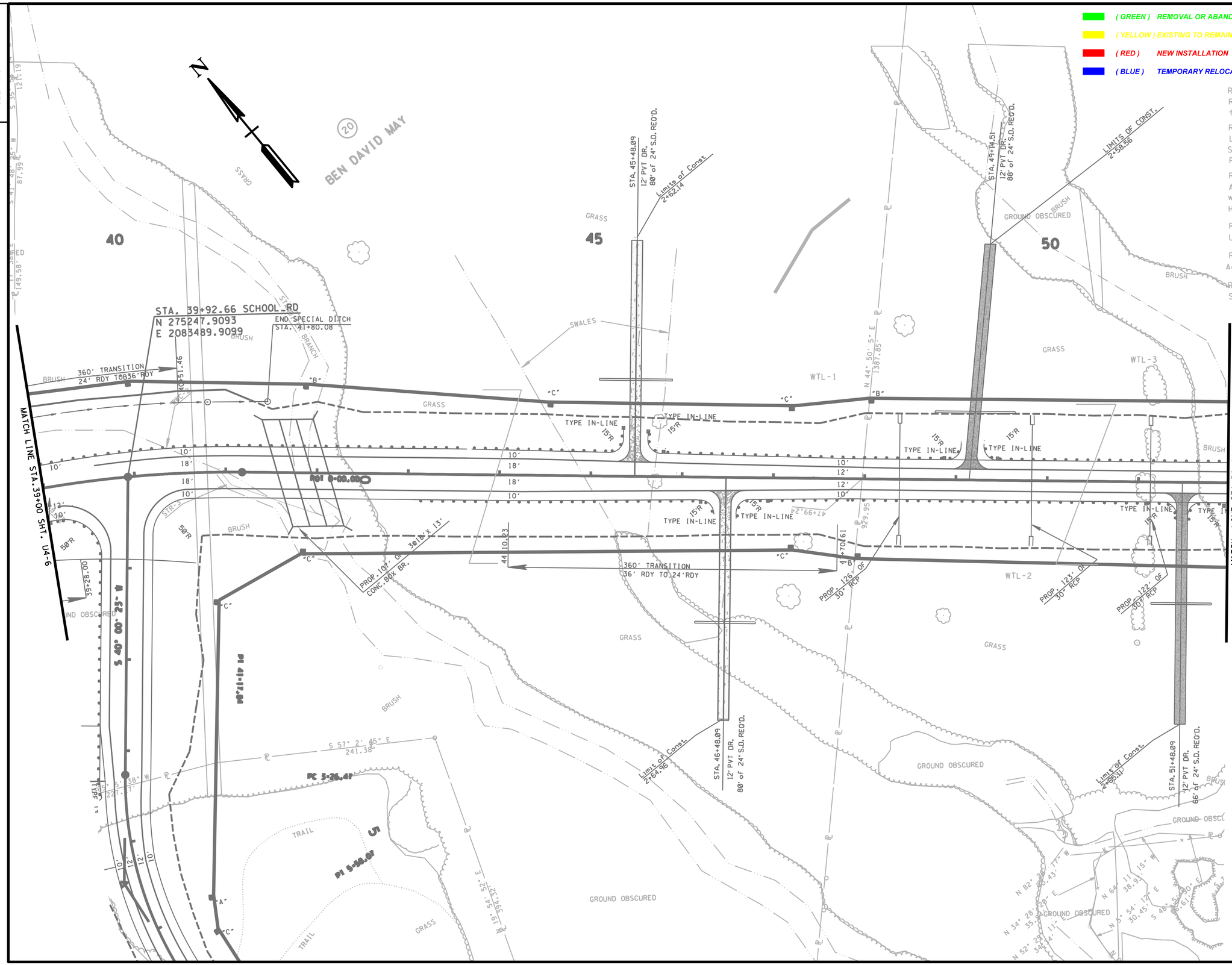

SEALED BY

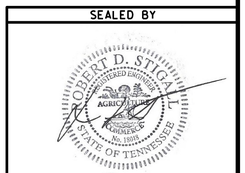

7-14-14

STIGALL ENGINEERING ASSOCIATES, INC.

MARION COUNTY
GAS DEPARTMENT

GAS RELOCATION

STA. 39+00 TO STA. 52+00

SCALE: 1"=50'

TENNESSEE D.O.T.
DESIGN DIVISION
FILE NO.

(GREEN)	REMOVAL OR ABANDONED
(YELLOW)	EXISTING TO REMAIN
(RED)	NEW INSTALLATION
(BLUE)	TEMPORARY RELOCATION

TYPE	YEAR	PROJECT NO.	SHEET NO.
CONST.	2013	58015-2215-14	U4-8

Rev. 10/31/2013
Update ROW take & drainage easement for Tracts 26, 27 & 31.

Rev. 12/06/2013
Correct slab bridge dimensions.

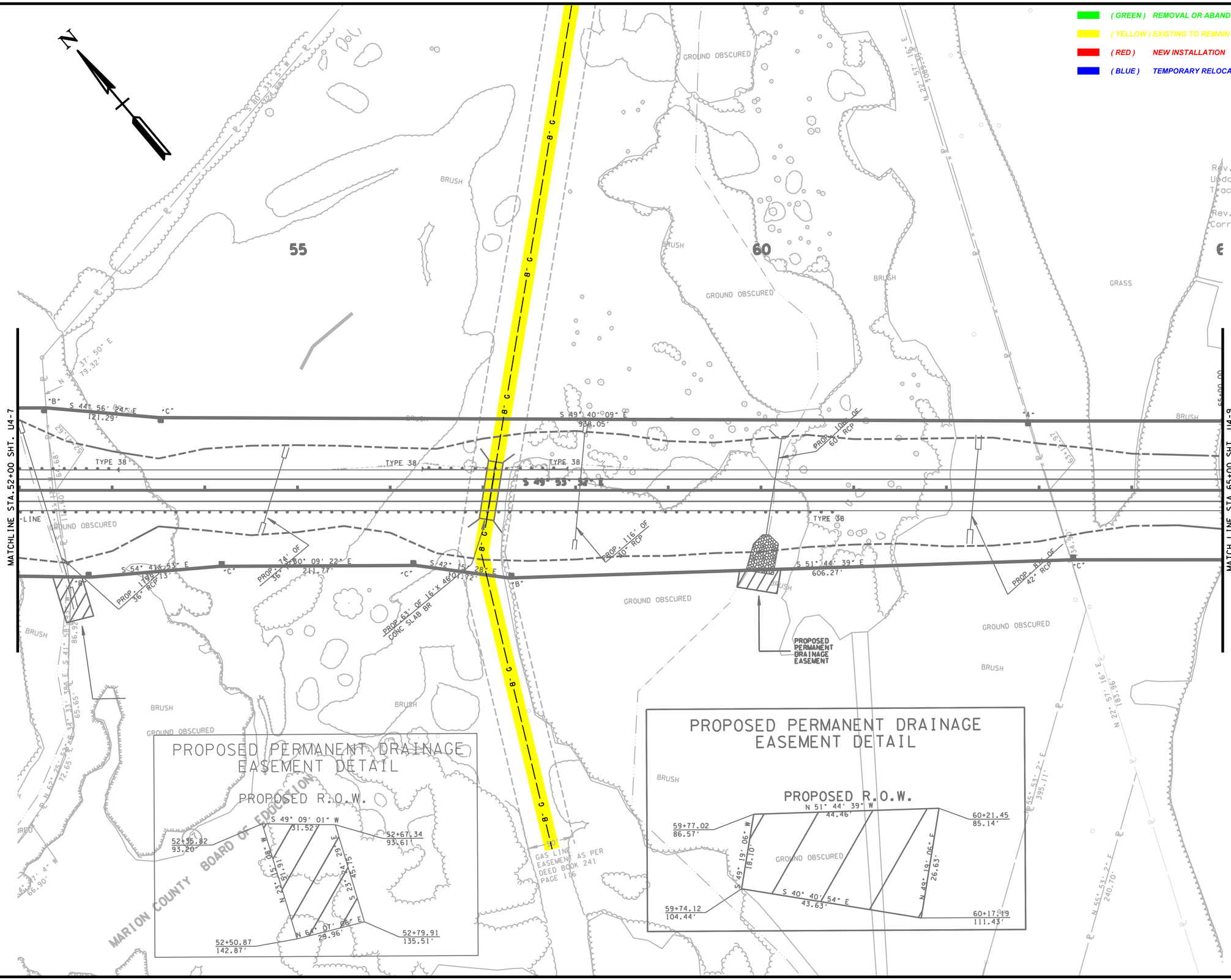

SEALED BY

ROBERT D. STIGALL
REGISTERED ENGINEER
AGRICULTURE
No. 18891
STATE OF TENNESSEE
7-14-14

STIGALL ENGINEERING ASSOCIATES, INC.

MARION COUNTY
GAS DEPARTMENT

GAS RELOCATION

STA. 52+00 TO STA. 65+00

SCALE: 1"=50'

TENNESSEE D.O.T.
DESIGN DIVISION
FILE NO.

TYPE	YEAR	PROJECT NO.	SHEET NO.
CONST.	2013	58015-2215-14	U4-9

Rev. 09/12/2012
Label environmental boundaries PND-1, STR-6, and WWC-4.

Rev. 10/11/2012
Label environmental boundary WTL-6 and add High Visibility Fencing.

Rev. 10/31/2013
Update end project.

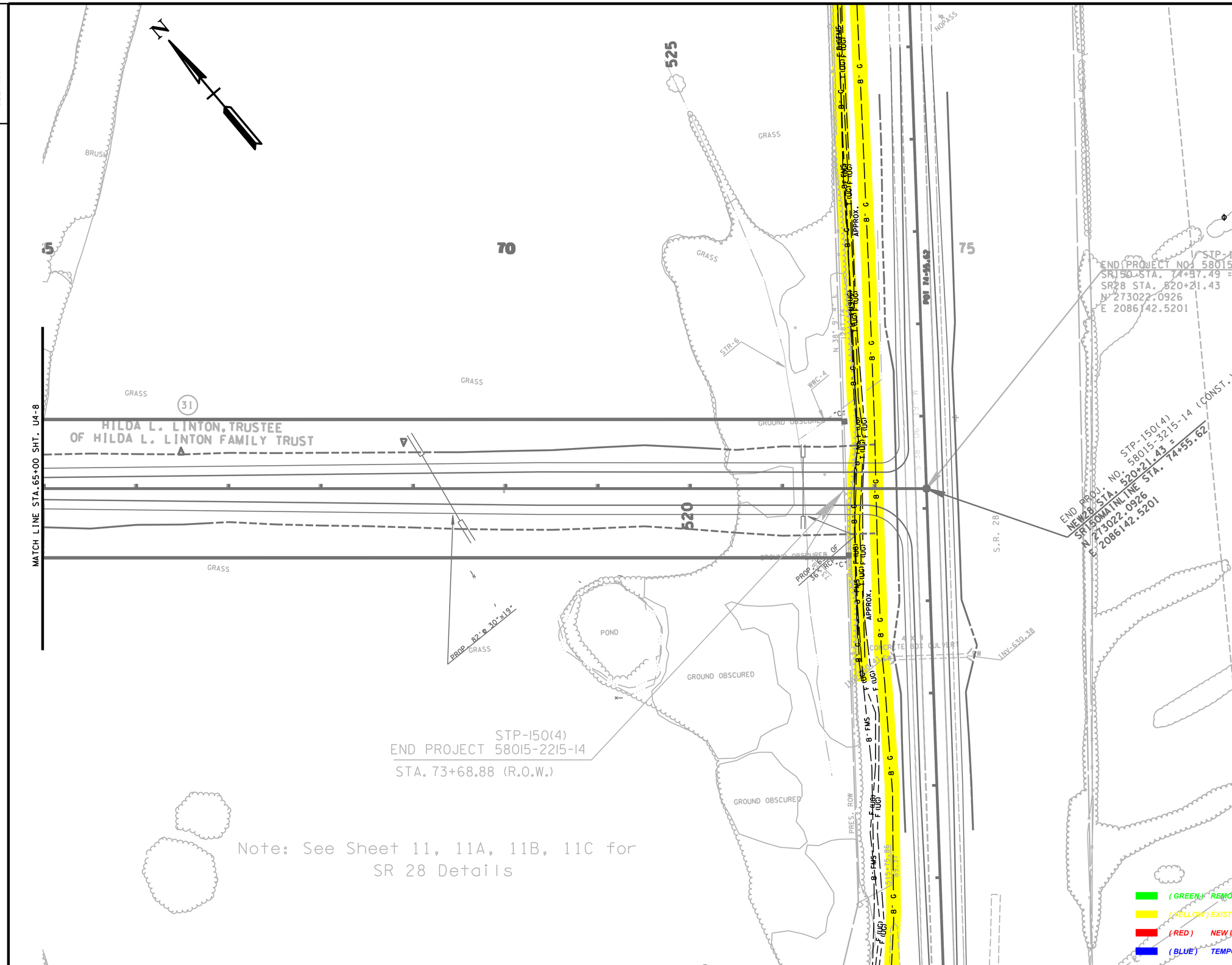

SEALED BY

ROBERT D. STIGALL
REGISTERED ENGINEER
AGRICULTURE
No. 19014
STATE OF TENNESSEE

7-14-14

STIGALL ENGINEERING ASSOCIATES, INC.

MARION COUNTY
GAS DEPARTMENT

GAS RELOCATION

STA. 65+00 TO STA. 75+00

SCALE: 1"=50'

TENNESSEE D.O.T.
DESIGN DIVISION
FILE NO.

TYPE	YEAR	PROJECT NO.	SHEET NO.
CONST.	2013	58015-2215-14	U4-10

Rev. 10/31/2013
Locate ROW take for Tracts 14 & 16.
Rev. 12/06/2013
Show driveway slopes.

Rev. 6/13/2012
Relocate R.O.W. Line and Slope Lines on the West side of Valley View Hwy between Sta. 5+00 and 7+00.

Rev. 8/8/2012
Relocate R.O.W. and Slope Lines on the West side of Valley View Hwy from Sta. 5+00 to 7+00. Extend proposed ROW on the North end of Valley View Hwy. Label Tracts #50 & #51.

Rev. 09/12/2012
Label environmental boundary STR-1

STA. 0+00 - GL •3
CONNECT TO EXISTING
6" GAS LINE
INSTALL :
STOPPLE FITTING
6" CAP

3' INSIDE R.O.W. - TYP.

PROPOSED 6" STEEL GAS LINE •3

STA. 7+61 - GL •3
•STA. 2+05 - GL •2
CONNECT TO PROPOSED
2" STEEL GAS LINE
INSTALL :
6" TEE
2 - 6" VALVES

ROAD CROSSING •4
SEE SHEET U4-13

3' INSIDE R.O.W. - TYP.

PROPOSED 6" STEEL GAS LINE •3

STA. 10+81 - GL •3
CONNECT TO EXISTING
6" GAS LINE
INSTALL :
STOPPLE FITTING
(FIELD LOCATE)

3' INSIDE R.O.W. - TYP.

PROPOSED STEEL GAS SERVICE LINE

ROAD CROSSING •3
SEE SHEET U4-13

CONNECT TO EXISTING
GAS SERVICE LINE AS REQD.

PROPOSED 2" STEEL GAS LINE
SEE SHEET U4-5

VALLEY VIEW HWY. STA. 0+00.00
POT 0+00.00
N 276786.2919
E 2081825.0988

BETSY PACK DR. STA. 13+74.52
N 275586.7638
E 2081317.4997

THE CITY OF SOUTH PITTSBURG

SEALED BY

ROBERT D. STIGALL
REGISTERED ENGINEER
AGRICULTURE
No. 19811
STATE OF TENNESSEE

7-14-14

STIGALL ENGINEERING ASSOCIATES, INC.

MARION COUNTY
GAS DEPARTMENT

GAS RELOCATION

STA. 0+77 TO STA. 13+74

SCALE: 1"=50'

(GREEN) REMOVAL OR ABANDONED
(YELLOW) EXISTING TO REMAIN
(RED) NEW INSTALLATION
(BLUE) TEMPORARY RELOCATION

TENNESSEE D.O.T.
DESIGN DIVISION
FILE NO.

(GREEN)	REMOVAL OR ABANDONED
(YELLOW)	EXISTING TO REMAIN
(RED)	NEW INSTALLATION
(BLUE)	TEMPORARY RELOCATION

TYPE	YEAR	PROJECT NO.	SHEET NO.
CONST.	2013	58015-2215-14	U4-11

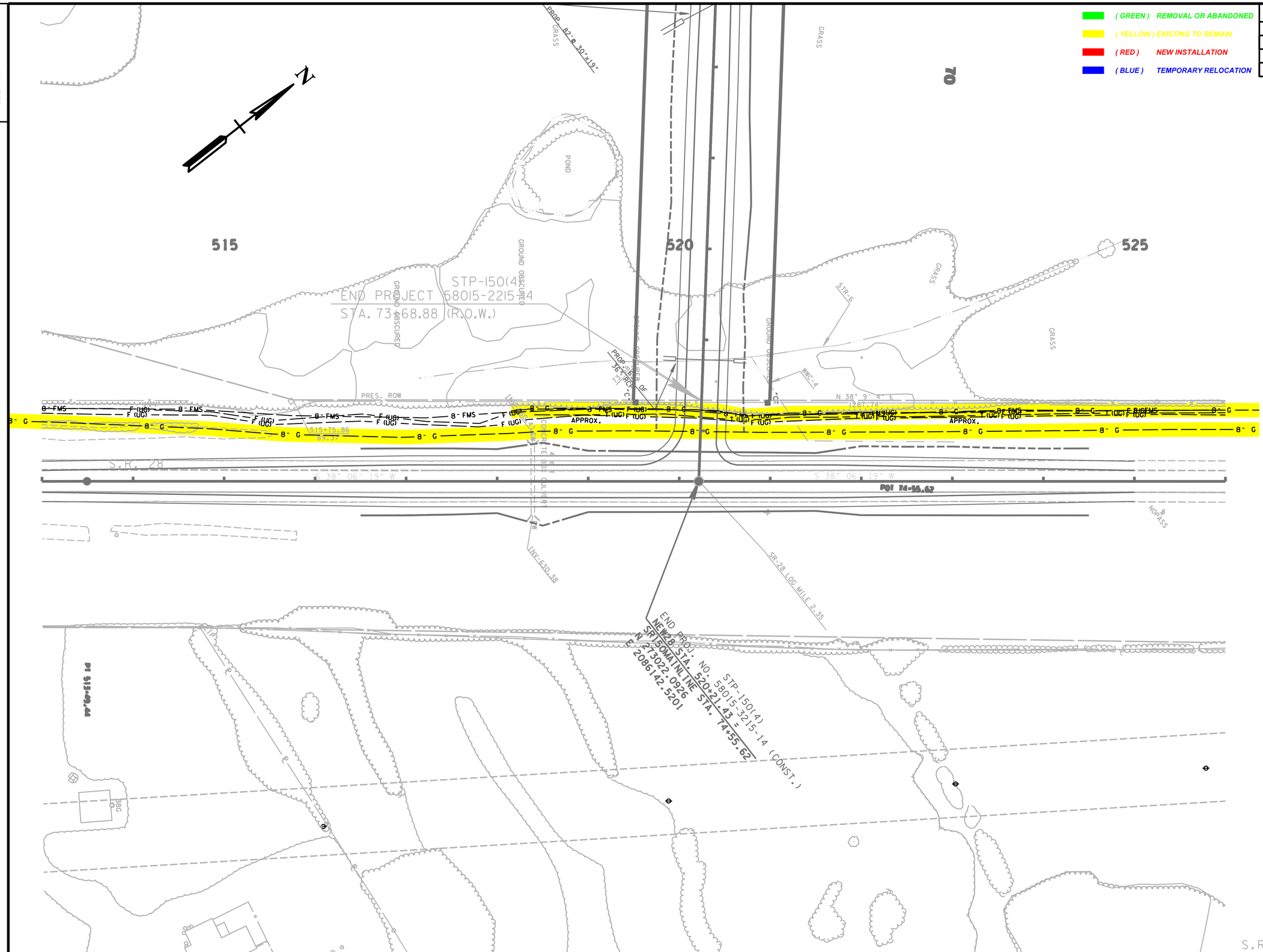

SEALED BY

ROBERT D. STIGALL
REGISTERED ENGINEER
AGRICULTURE
CIVIL
No. 19018
STATE OF TENNESSEE

7-14-14

STIGALL ENGINEERING ASSOCIATES, INC.

MARION COUNTY
GAS DEPARTMENT

GAS RELOCATION

STA. 513+00 TO STA. 526+00

SCALE: 1"=50'

TYPE	YEAR	PROJECT NO.	SHEET NO.
CONST.	2013	58015-2215-14	U4-12

TENNESSEE D.O.T.
DESIGN DIVISION

FILE NO.

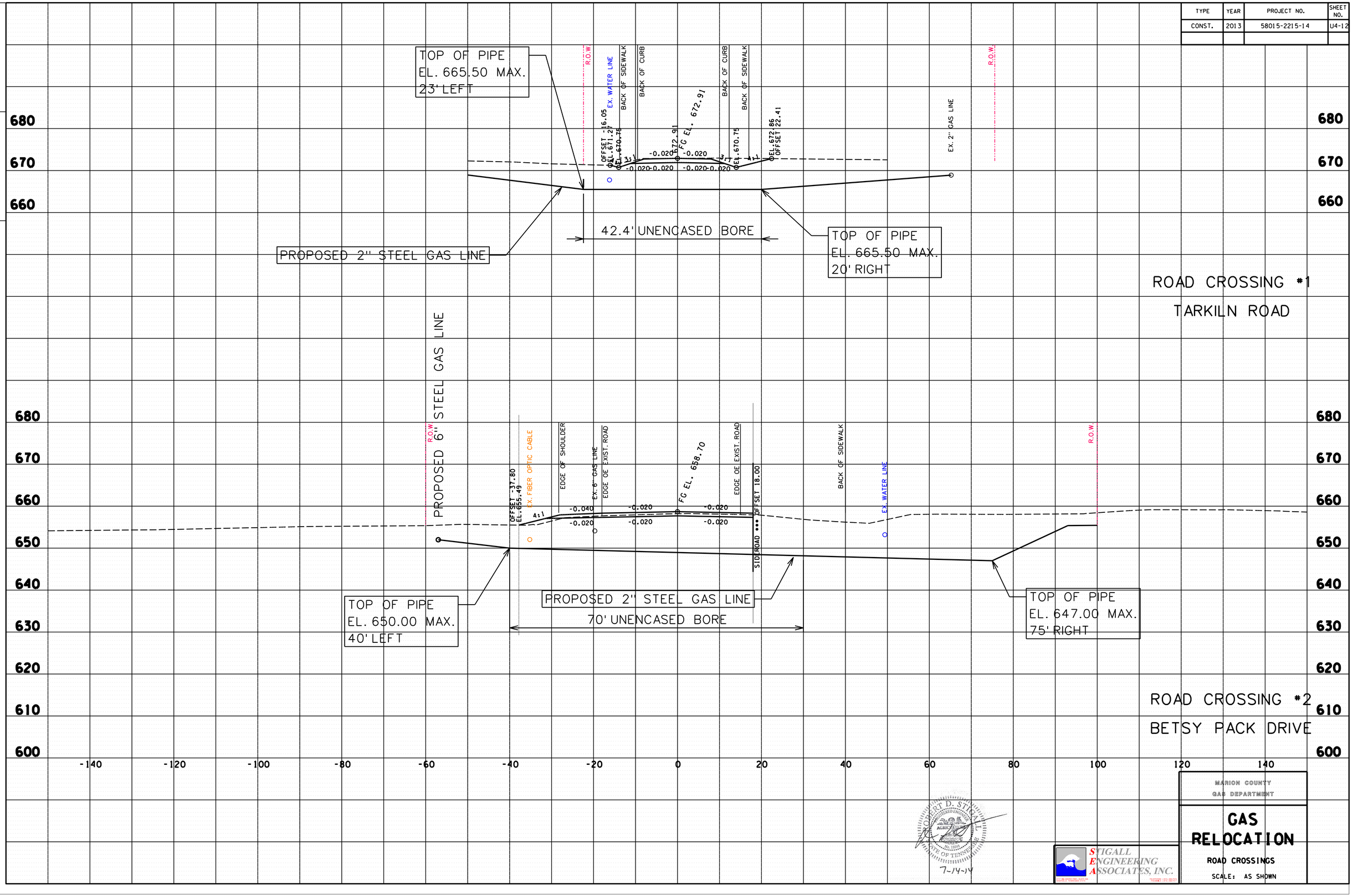

MARION COUNTY
GAS DEPARTMENT

GAS RELOCATION

ROAD CROSSINGS

SCALE: AS SHOWN

ROBERT D. STIGALL
REGISTERED ENGINEER
AGRICULTURE
No. 19891
STATE OF TENNESSEE
7-14-14

STIGALL ENGINEERING ASSOCIATES, INC.

TYPE	YEAR	PROJECT NO.	SHEET NO.
CONST.	2013	58015-2215-14	U4-13

FILE NO.

TENNESSEE D.O.T.
DESIGN DIVISION

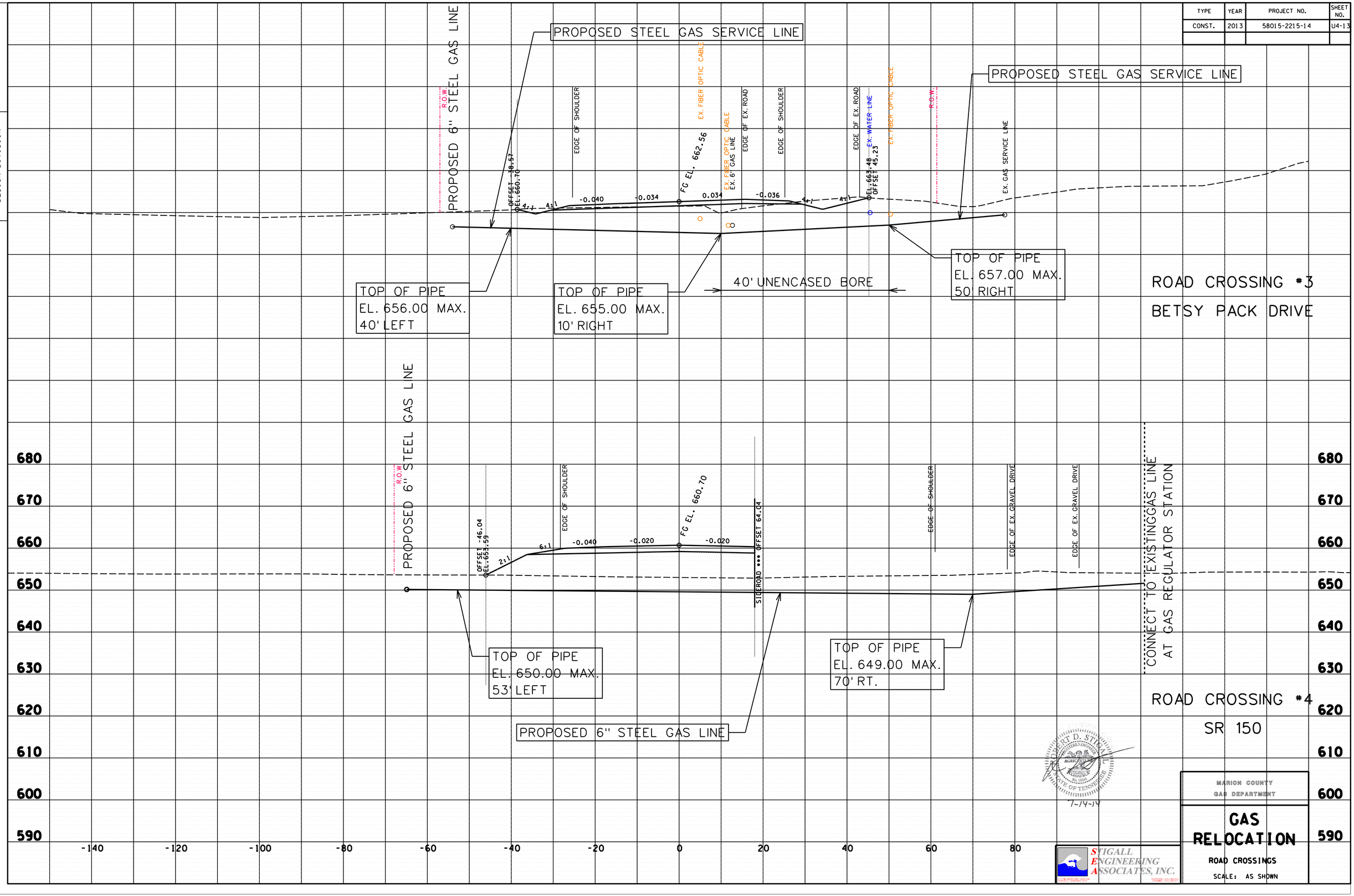

ROBERT D. STIGALL
REGISTERED ENGINEER
AGRICULTURE
No. 18881
STATE OF TENNESSEE
7-14-14

MARION COUNTY
GAS DEPARTMENT

GAS RELOCATION

ROAD CROSSINGS

SCALE: AS SHOWN

STIGALL ENGINEERING ASSOCIATES, INC.

TENNESSEE D.O.T.
DESIGN DIVISION
FILE NO.

TYPE	YEAR	PROJECT NO.	SHEET NO.
CONST.	2013	58015-2215-14	U4-14

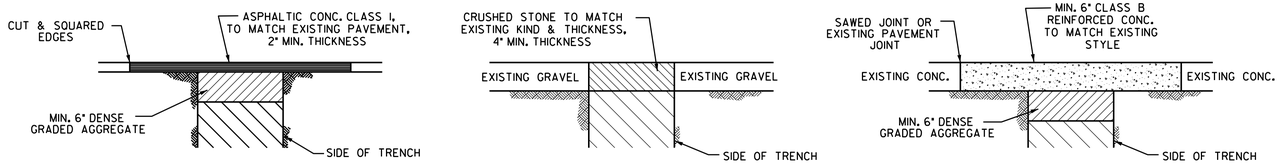

PAVEMENT REPLACEMENT DETAILS

NO SCALE

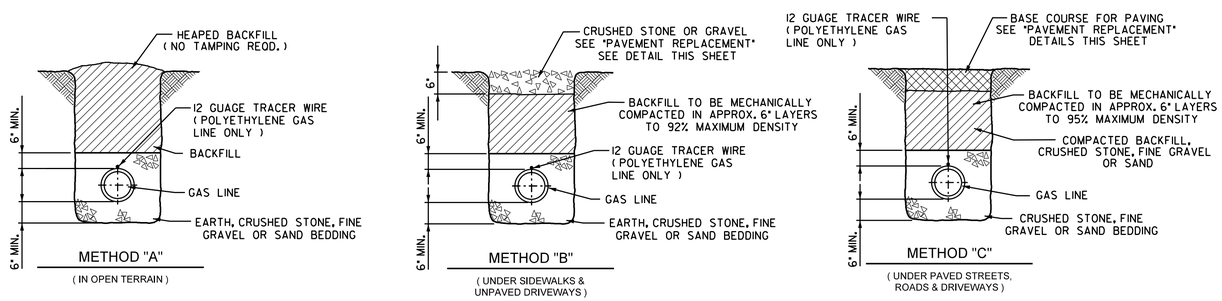

PIPE BEDDING & BACKFILLING DETAILS FOR POLYETHYLENE PIPE

NO SCALE

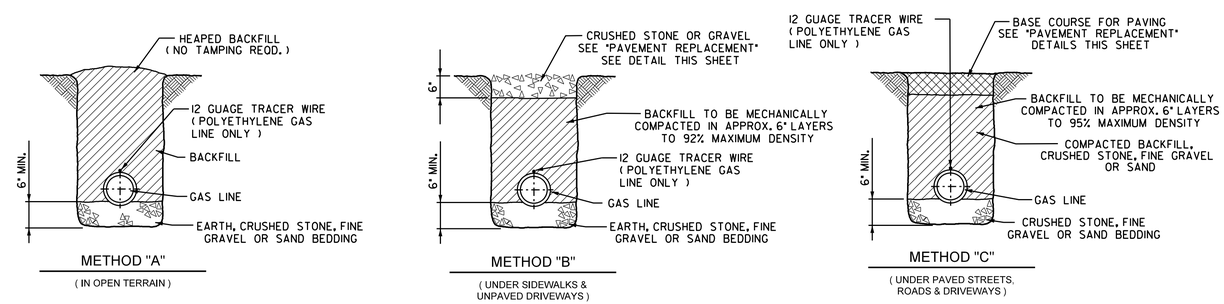

PIPE BEDDING & BACKFILLING DETAILS FOR STEEL PIPE

NO SCALE

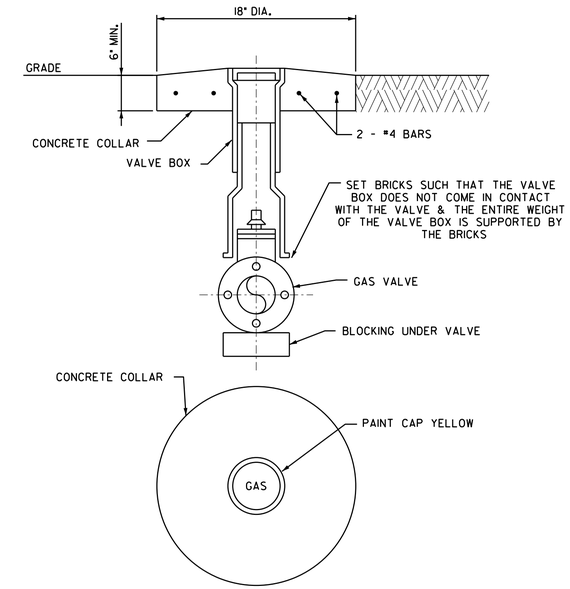

TYPICAL VALVE BOX SETTING DETAIL

NO SCALE

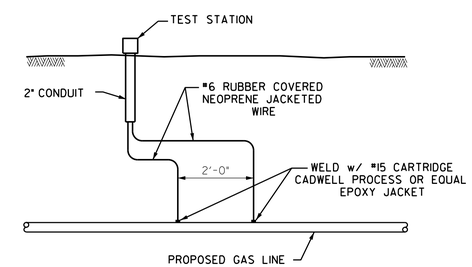

TEST STATION DETAIL

NO SCALE

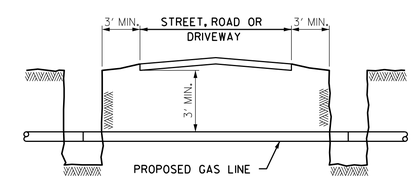

TYPICAL UNCASED BORE DETAIL

NO SCALE

SEALED BY

7-14-14

STIGALL ENGINEERING ASSOCIATES, INC.

MARION COUNTY
GAS DEPARTMENT

GAS RELOCATION

GAS DETAILS

SCALE: AS SHOWN

TENNESSEE D.O.T.
DESIGN DIVISION
FILE NO.

CTI PROJECT: C06089-12 Highway 41/SR 27 Water Line Relocations, DRAWING: COVER SHEET (350875v4/1/9/13 1:31PM), LAYOUT: U2-1

DATE OF PRINT: 1/9/2013 1:34 PM

$$$SYTIME$$$$$$
$$$DGNSPEC$$

TYPE	YEAR	PROJECT NO.	SHEET NO.
R.O.W.	2013	STP-1-50(4)	U2-1

State Project No.: 58015-2210-14
Route: From Existing SR-150 to SR-28 NORTH OF JASPER
County: Marion
Submitted By: CTI Engineers Inc.
Utility Office Contact: Ed Freeman

ESTIMATED UTILITY QUANTITES

	ITEM NUMBER	DESCRIPTION	UNIT	QUANTITY
	WATER QUANTITIES		**100% PROJ.**	**0% UTILITY**
		Water Items		
(1)	795-01.05	8IN DIP RESTRAINED JOINT WATER LINE	L.F.	225
(1)	795-03.06	8IN PVC WATER LINE	L.F.	580
(2)	795-05.01	HDD 2IN HDPE CARRIER PIPE-UNCON	L.F.	200
(10)	795-05.65	BORE/JACK 16IN STEEL CASING PIPE-UNCON.	L.F.	220
(4)	795-07.05	8IN X 6IN TAPPING SLEEVE AND VALVE	EACH	2
(5)	795-08.04	6IN GATE VALVE ASSEMBLY	EACH	2
(5)	795-08.05	8IN GATE VALVE ASSEMBLY	EACH	7
	795-09.01	3/4IN WATER SERVICE METER ASSEMBLY	EACH	2
(7)	795-09.14	3/4IN HDPE SERVICE PIPE	L.F.	200
(6)	795-11.01	BLOW-OFF ASSEMBLY	EACH	2
	795-11.04	RECONNECT FIRE HYDRANT	EACH	1
	795-13.01	DUCTILE IRON FITTINGS	LBS	410
	795-13.03	PVC FITTINGS	LBS	170
(8)	795-14.02	CLASS B CONCRETE	C.Y.	10
	SEWER QUANTITIES		**100% PROJ.**	**0% UTILITY**
(1)	797-05.01	8IN DIP GRAVITY SEWER 0FT-6FT DEPTH.	L.F.	115
(1)	797-05.02	8IN DIP GRAVITY SEWER 6FT-12FT DEPTH	L.F.	80
(1)	797-05.51	8IN PVC GRAVITY SEWER 0FT-6FT DEPTH	L.F.	15
(1)	797-05.52	8IN PVC GRAVITY SEWER 6FT-12FT DEPTH	L.F.	580
(1)	797-05.53	8IN PVC GRAVITY SEWER 12FT-18FT DEPTH	L.F.	250
(10)	797-06.64	BORE/JACK 16IN STEEL CASING PIPE-UNCON.	L.F.	110
(4)	797-07.01	48IN MANHOLE 0FT-4FT DEPTH	EACH	1
(4)	797-07.02	48IN MANHOLE 4FT-6FT DEPTH	EACH	1
(4)	797-07.03	48IN MANHOLE 6FT-8FT DEPTH	EACH	1
(4)	797-07.04	48IN MANHOLE 8FT-10FT DEPTH	EACH	2
(4)	797-07.05	48IN MANHOLE 10FT-12FT DEPTH	EACH	2
(4)	797-07.06	48IN MANHOLE 12FT-14FT DEPTH	EACH	2
(3)	797-10.02	CONNECT 8IN SEWER TO EXIST. MANHOLE	EACH	1
(3)	797-10.09	CONNECT EX. 8IN SEWER TO NEW MANHOLE	EACH	1
(12)	797-11.25	RETIREIN PLACE 48" MANHOLE	EACH	1
(9)	797-11.31	RETIREIN PLACE EXISTING SEWER 8IN-14IN	L.F.	1
	797-11.40	RESTORE ASPHALT	S.Y	2

WATER ITEMS FOOTNOTES

(1) INCLUDES ALL MATERIALS, LABOR, EQUIPMENT FOR COMPLETE INSTALLATION OF PIPE INCLUDING BUT NOT LIMITED TO TRAFFIC CONTROL, MATERIALS, EQUIPMENT, EXCAVATION IN BOTH UNCONSOLIDATED AND ROCK, REMOVAL AND REPLACEMENT OF UNSUITABLE SOIL, ENVELOPE/BEDDING MATERIAL, BACKFILLING, FLOWABLE FILL, THRUST BLOCKING, CONCRETE DEADMAN, PIPE FUSION, TRACER WIRE, WARNING TAPE, APPURTENANCES, TEMPORARY/PERMANENT SHORING, MAINTAINING THE TRENCH, TESTING, FLUSHING, DISINFECTION, BACTERIOILOGICAL SAMPLING, TEMPORARY/PERMANENT SURFACE RESTORATION, AND ANY OTHER LABOR OR MATERIAL REQUIRED TO COMPLETE THE WORK AS SPECIFIED ON THE PLANS.

(2) INCLUDES ALL MATERIALS, LABOR, EQUIPMENT, AND TRAFFIC CONTROL, INCLUDING BUT NOT LIMITED TO FLUID CONTAINMENT FOR COMPLETE HORIZONTAL DIRECTIONAL DRILLING INSTALLATION OF CASING PIPE OR UNCASED CARRIER PIPE IN BOTH UNCONSOLIDATED SOIL OR ROCK. IF CASING PIPE HAS CARRIER PIPE, THE CARRIER PIPE SHALL BE PAID AT THE OPEN CUT ITEM.

(10) INCLUDES ALL MATERIALS, LABOR AND EQUIPMENT INCLUDING BUT NOT LIMITED TO CASING PIPE, PIPE SPACERS, CASING END SEALS, FITTINGS, TRACER WIRE, WARNING TAPE, UTILITY LINE MARKERS AND TRAFFIC CONTROL. IF CASING PIPE HAS CARRIER PIPE, THE CARRIER PIPE SHALL BE PAID AT THE OPEN CUT ITEM.

(4) INCLUDES ALL MATERIALS, LABOR AND EQUIPMENT INCLUDING BUT NOT LIMITED TO TAPPING SLEEVE, VALVE, VALVE BOX, BOX ADJUSTMENT, VALVE BOX COLLAR, VALVE MARKER, EXCAVATION, BEDDING, BACKFILL, BLOCKING AND RESTRAINT, TAP OF EXISTING LINE, AND TRAFFIC CONTROL.

(5) INCLUDES ALL MATERIALS, LABOR AND EQUIPMENT INCLUDING BUT NOT LIMITED TO FITTINGS, VALVE, VALVE STEM EXTENSIONS, VALVE BOX AND COVER, BOX ADJUSTMENT, VALVE BOX COLLAR, VALVE MARKER, EXCAVATION, BEDDING, BACKFILL, BLOCKING, AND TRAFFIC CONTROL.

(7) INCLUDES ALL MATERIALS, LABOR AND EQUIPMENT FOR COMPLETE INSTALLATION OF SERVICE LINE OR CASING FOR SERVICE LINE ON LONG SIDE AND SHORT SIDE OF MAIN.

(6) INCLUDES ALL MATERIALS, LABOR AND EQUIPMENT INCLUDING BUT NOT LIMITED TO MACHINERY, TOOLS OR APPARATUS NECESSARY FOR INSTALLATION OF ASSEMBLIES AS DESCRIBED IN THE PLANS AND SPECS EXCEPT FOR SERVICE LINE WHICH IS PAID SEPERATELY FOR EACH FOOT INSTALLED.

(8) INCLUDES ALL MATERIALS, LABOR AND EQUIPMENT FOR COMPLETE INSTALLATION OF UNIT OR LUMP SUM ITEM AS SPECIFIED ON BID FORM.

SEWER ITEMS FOOTNOTES

(1) INCLUDES ALL MATERIALS, LABOR AND EQUIPMENT FOR COMPLETE EXCAVATION INCLUDING BUT NOT LIMITED TO BEDDING, BACKFILLING, THRUST BLOCKING, PIPE FUSION, APPURTENANCES, FLOWABLE FILL, MAINTAINING THE TRENCH, TESTING, CHECK DAMS, AND ANY OTHER LABOR OR MATERIAL REQUIRED TO COMPLETE FOR GRAVITY SEWER LINES OR FORCE MAINS AS SPECIFIED ON THE PLANS. DUCTILE IRON PIPE GRAVITY SEWER LINES SHALL BE EPOXY LINED.

(10) INCLUDES ALL MATERIALS, LABOR AND EQUIPMENT INCLUDING BUT NOT LIMITED TO CASING PIPE, PIPE SPACERS, CASING END SEALS, ANY OTHER APPURTENANCE TO COMPLETE THE WORK AS SPECIFIED ON THE PLANS, AND TRAFFIC CONTROL. IF CASING PIPE HAS CARRIER PIPE, THE CARRIER PIPE SHALL BE PAID AT THE OPEN CUT ITEM.

(4) INCLUDES ALL MATERIALS, LABOR AND EQUIPMENT NECESSARY FOR INSTALLATION OF PRECAST MANHOLE BOTH PREFORMED BASE OR OPEN BOTTOM (DOGHOUSE), INCLUDING BUT NOT LIMITED TO VENT ASSEMBLY (WHERE REQUIRED), CRUSHED STONE, PIPE TO MANHOLE CONNECTORS, EXCAVATION, BACKFILL, BUTYL RESIN GASKET, MANHOLE STEPS, ASPHALTIC WATERPROOFING, FRAME AND COVER, AND TRAFFIC

(3) INCLUDES ALL MATERIALS, LABOR, AND EQUIPMENT NECESSARY FOR CONNECTING TO AN EXISTING FORCE MAIN, SEWER LINE, PUMP STATION, OR MANHOLE AS SPECIFIED ON PLANS, INCLUDING TRAFFIC CONTROL.

(12) INCLUDES ALL LABOR, EQUIPMENT, DISPOSAL OF WASTE MATERIAL, DRILLING HOLES IN BASE FOR PROPER DRAINAGE, REMOVAL OF NECESSARY BARRAL SECTIONS FOR PROPER GRADE AND STONE BACKFILL.

(9) INCLUDES ALL MATERIALS, LABOR, AND EQUIPMENT FOR RETIRE IN PLACE OR REMOVE ITEMS AS SPECIFIED ON THE BID FORM INCLUDING TRAFFIC CONTROL.

Index of Sheets

SHEET NO. — DESCRIPTION

U2-1 ....COVER SHEET
U2-2 ....PRESENT LAYOUT
U2-3 ....PRESENT LAYOUT
U2-4 ....SEWER PROFILE
U2-5 ....STANDARD WATER DETAILS
U2-6 ....STANDARD WATER DETAILS
U2-7 ....STANDARD SEWER MANHOLE DETAILS
U2-8 ....STANDARD SEWER DETAILS
U2-9 ....STANDARD SEWER DETAILS

GREGORY BRIAN SCOTCHIE
REGISTERED ENGINEER
AGRICULTURE COMMERCE
No. 114331
STATE OF TENNESSEE
1-9-2013

COVER SHEET

NOT TO SCALE

TDOT PROJ.# 58015-2210-14
PROPOSED SEWER AND WATER LAYOUT

JOB NUMBER:

DWG U2-1 OF U2-9

UTILITY INFORMATION
TOWN OF JASPER
4460 MAIN STREET
JASPER, TN 37347
CONTACT: Ed Freeman
PHONE: 423 942 3180
FAX: 423-942-3110

STATE OF TENNESSEE
DEPARTMENT OF TRANSPORTATION

CTI ENGINEERS, INC.
1122 RIVERFRONT PARKWAY
CHATTANOOGA, TN 37402
423-267-7613

WATER & SEWER COVER SHEET

TYPE	YEAR	PROJECT NO.	SHEET NO.
R.O.W.	2012	STP-150(4)	U2-2

LEGEND

- PROPOSED UTILITY LINE
- EXISTING UTILITY TO BE ABANDONED OR REMOVED
- EXISTING UTILITY TO REMAIN

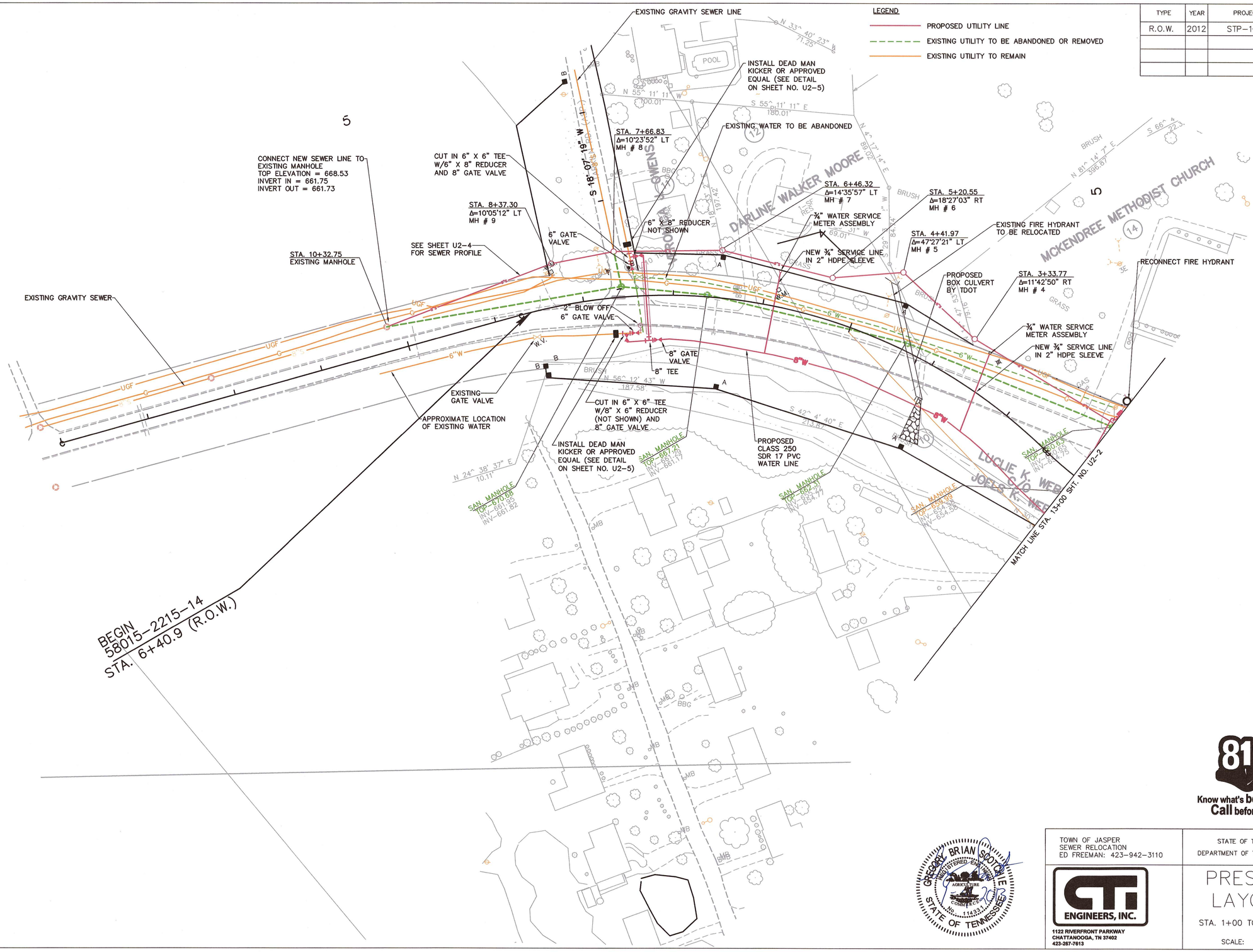

811
Know what's below.
Call before you dig.

GREGORY BRIAN SCOTTLINE
REGISTERED ENGINEER
AGRICULTURE
COMMERCE
NO. 114331
STATE OF TENNESSEE

TOWN OF JASPER
SEWER RELOCATION
ED FREEMAN: 423-942-3110

STATE OF TENNESSEE
DEPARTMENT OF TRANSPORTATION

CTI ENGINEERS, INC.
1122 RIVERFRONT PARKWAY
CHATTANOOGA, TN 37402
423-267-7013

PRESENT LAYOUT

STA. 1+00 TO STA. 13+00

SCALE: 1"= 50'

TENNESSEE D.O.T.
DESIGN DIVISION
FILE NO.

CTI PROJECT: C06089-12 Highway 41/SR 27 Water Line Relocations, DRAWING: UPDATED UTILITY PLANS (351386v7/1/9/13 12:41PM), LAYOUT: SHEET 4

DATE OF PRINT: 1/9/2013 1:14 PM

$$$$SYTIME$$$$$$$
$$$$DGNSPEC$$$$

TENNESSEE D.O.T.
DESIGN DIVISION

FILE NO.

CTI PROJECT: C06089-12 Highway 41/SR 27 Water Line Relocations, DRAWING: UPDATED UTILITY PLANS (351386v7/1/9/13 12:41PM), LAYOUT: SHEET 5

DATE OF PRINT: 1/9/2013 1:31 PM

TYPE	YEAR	PROJECT NO.	SHEET NO.
R.O.W.	2012	STP-150(4)	U2-3

LEGEND

- PROPOSED UTILITY LINE
- EXISTING UTILITY TO BE ABANDONED OR REMOVED
- EXISTING UTILITY TO REMAIN

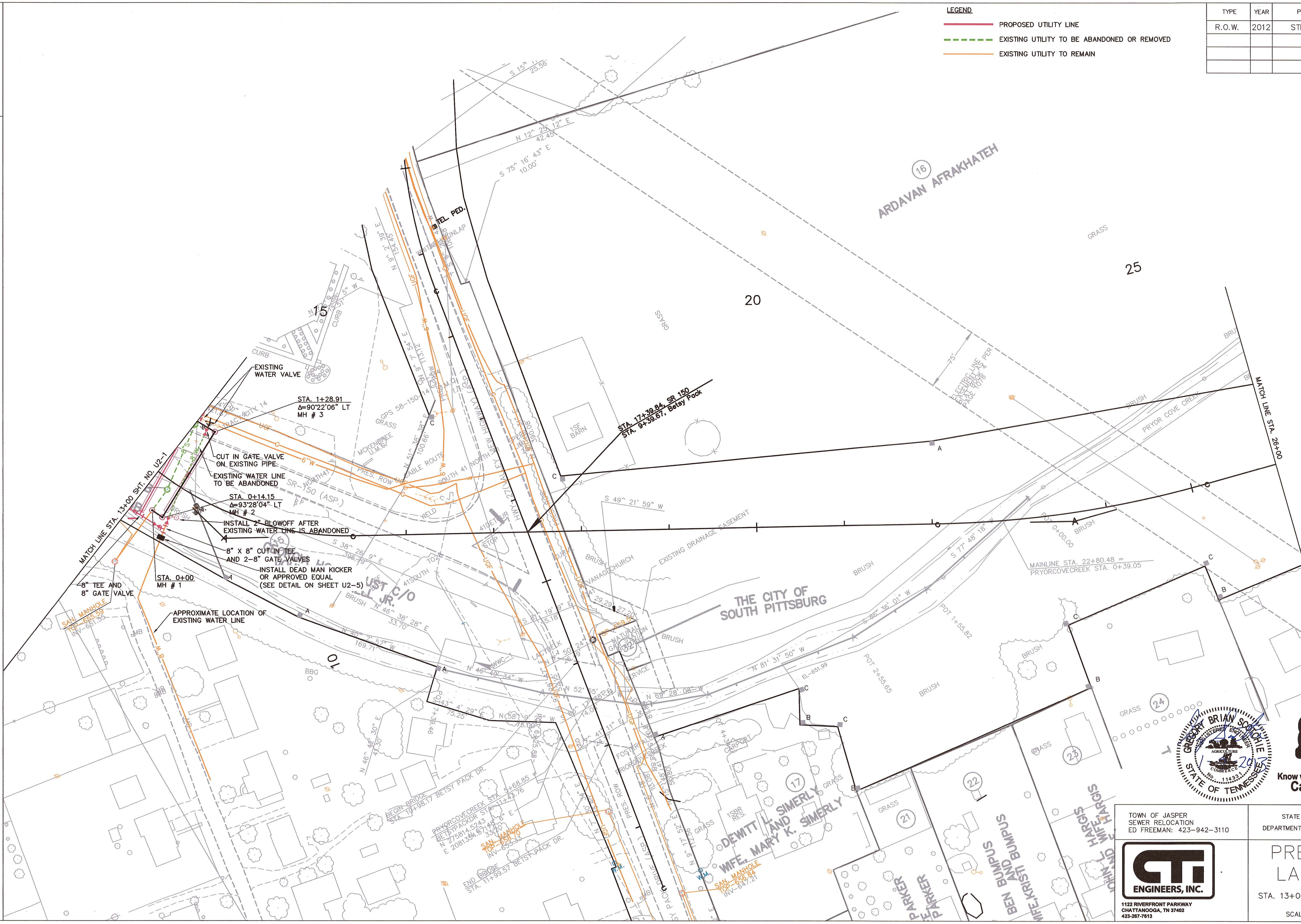

GREGORY BRIAN SCHOHIE
REGISTERED ENGINEER
AGRICULTURE COMMERCE
No. 114331
STATE OF TENNESSEE
1-9-2013

811
Know what's below.
Call before you dig.

TOWN OF JASPER
SEWER RELOCATION
ED FREEMAN: 423-942-3110

STATE OF TENNESSEE
DEPARTMENT OF TRANSPORTATION

CTI ENGINEERS, INC.
1122 RIVERFRONT PARKWAY
CHATTANOOGA, TN 37402
423-267-7613

PRESENT LAYOUT

STA. 13+00 TO STA. 26+00

SCALE: 1"= 50'

TYPE	YEAR	PROJECT NO.	SHEET NO.
R.O.W.	2012	STP-150(4)	U2-4

TENNESSEE D.O.T.
DESIGN DIVISION
FILE NO.

CTI PROJECT: C06089-12 Highway 41/SR 27 Water Line Relocations, DRAWING: UPDATED UTILITY PLANS (351386v7/1/9/13 12:41PM), LAYOUT: PROFILE

DATE OF PRINT: 1/9/2013 1:13 PM

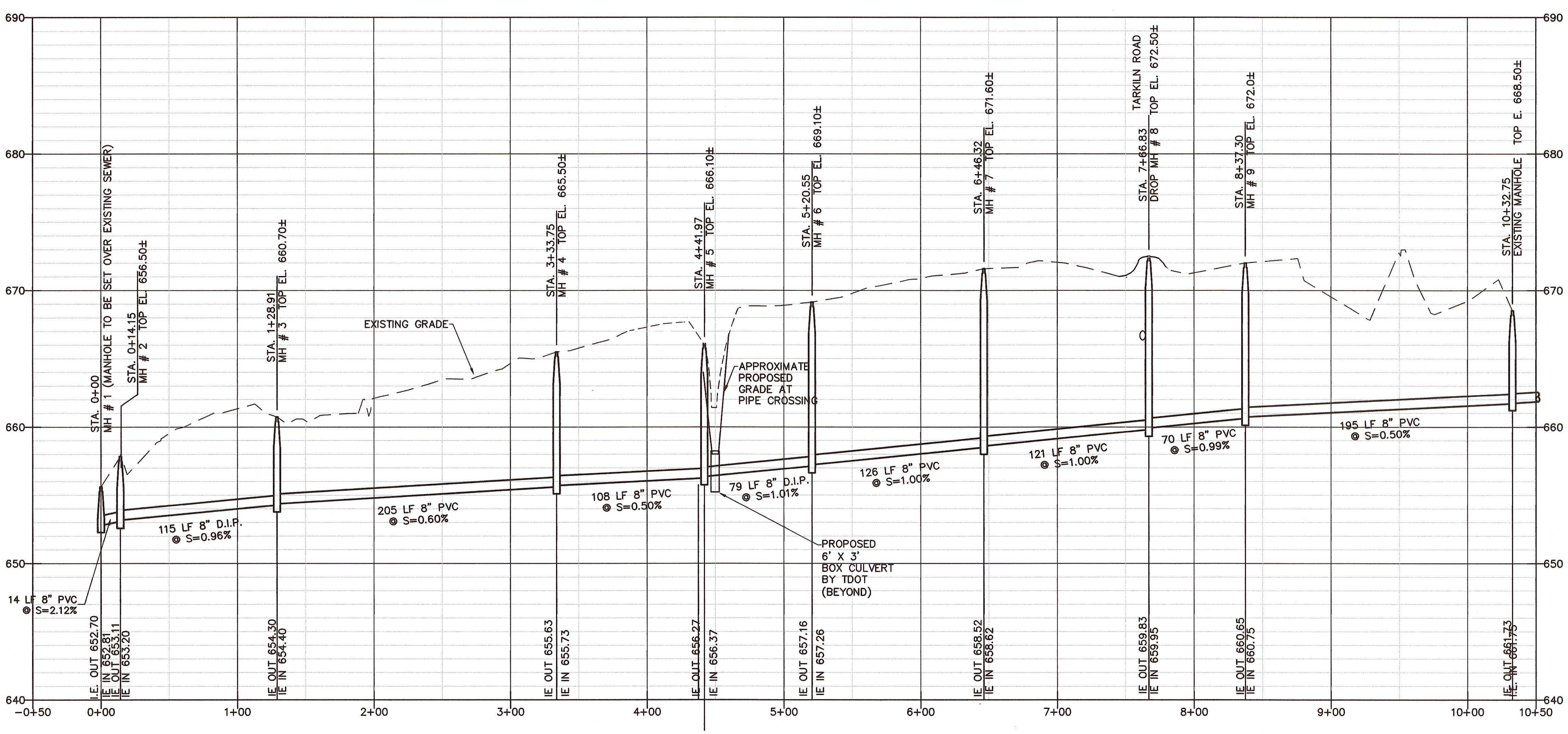

PROFILE
SCALE: 1"=50' HORIZ.
1"=5' VERT.

811 Know what's below. Call before you dig.

GREGORY BRIAN SCOTCHIE
REGISTERED ENGINEER
AGRICULTURE COMMERCE
No. 114331
STATE OF TENNESSEE

TOWN OF JASPER
SEWER RELOCATION
ED FREEMAN: 423-942-3110

STATE OF TENNESSEE
DEPARTMENT OF TRANSPORTATION

CTI ENGINEERS, INC.
1122 RIVERFRONT PARKWAY
CHATTANOOGA, TN 37402
423-267-7613

SEWER PROFILE

SCALE: 1"= 50'

TYPE	YEAR	PROJECT NO.	SHEET NO.
R.O.W.	2012	STP–150(4)	U2–5

TENNESSEE D.O.T.
DESIGN DIVISION
FILE NO.

CTI PROJECT: C06089–12 Highway 41/SR 27 Water Line Relocations, DRAWING: ALL DETAILS (350736v11/1/9/13 12:23PM), LAYOUT: W1

DATE OF PRINT: 1/9/2013 1:12 PM

$$$$SYTIME$$$$$$
$$$DGNSPEC$$

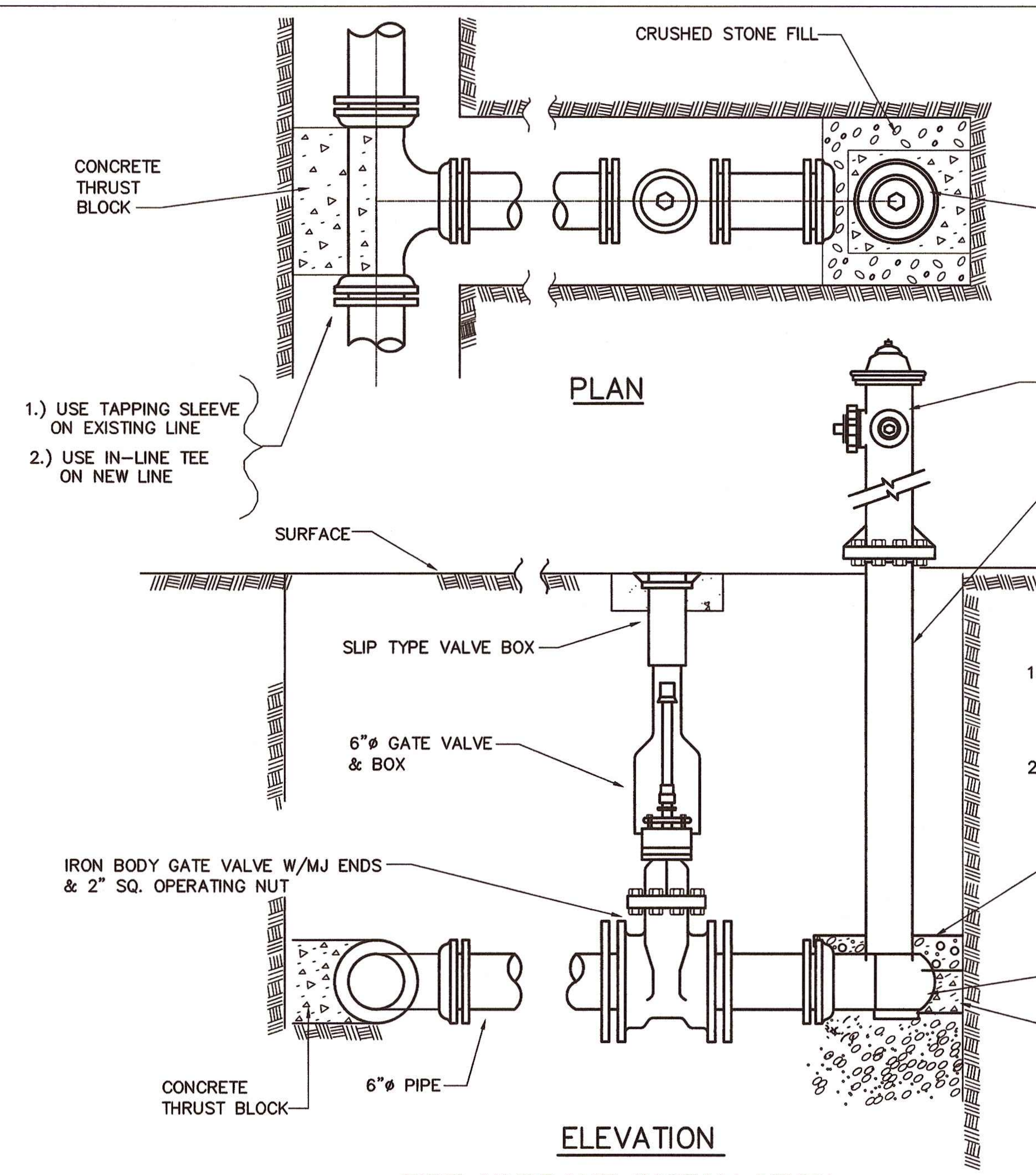

NOTES:

1. TEE, GATE VALVE AND BOX, HYDRANT, THRUST BLOCKING, 6" DIA. PIPING AS WELL AS ALL OTHER WORK NECESSARY TO COMPLETE THE INSTALLATION SHALL BE INCLUDED IN THE UNIT PRICE BID FOR FIRE HYDRANTS.
2. BLOCK MAY BE POURED UNDER THE BEND WITH THE BEND STRAPPED TO ANCHOR IF MORE PRACTICAL.

FIRE HYDRANT INSTALLATION
NTS

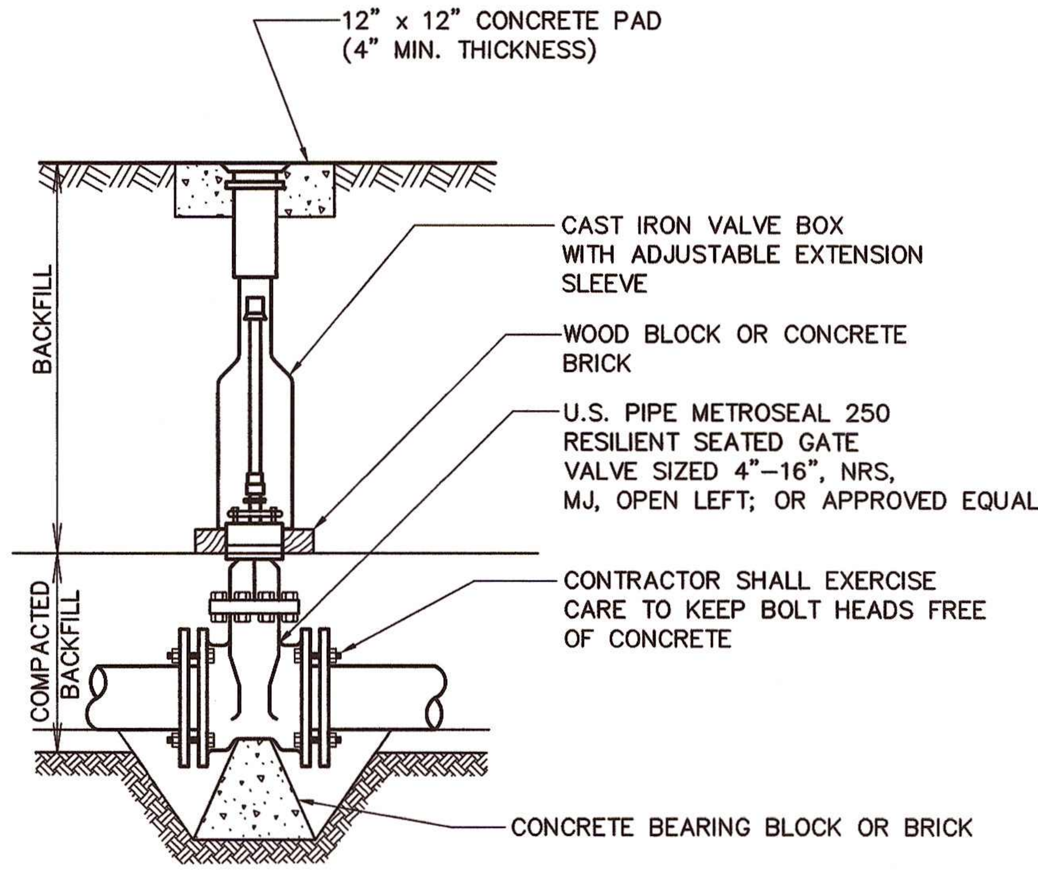

GATE VALVE INSTALLATION DETAIL
NTS

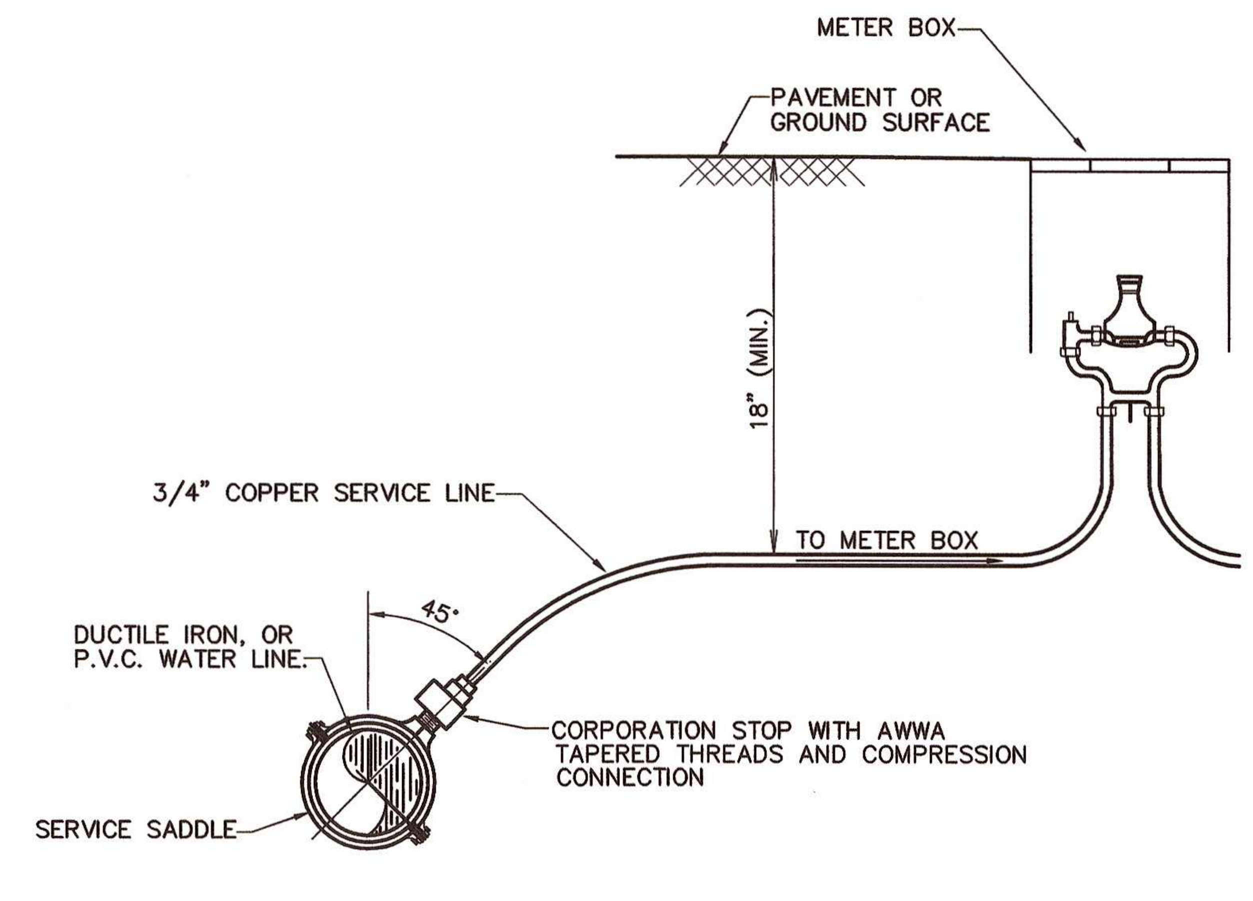

SERVICE INSTALLATION DETAIL
(METERS 1" AND SMALLER)
NTS

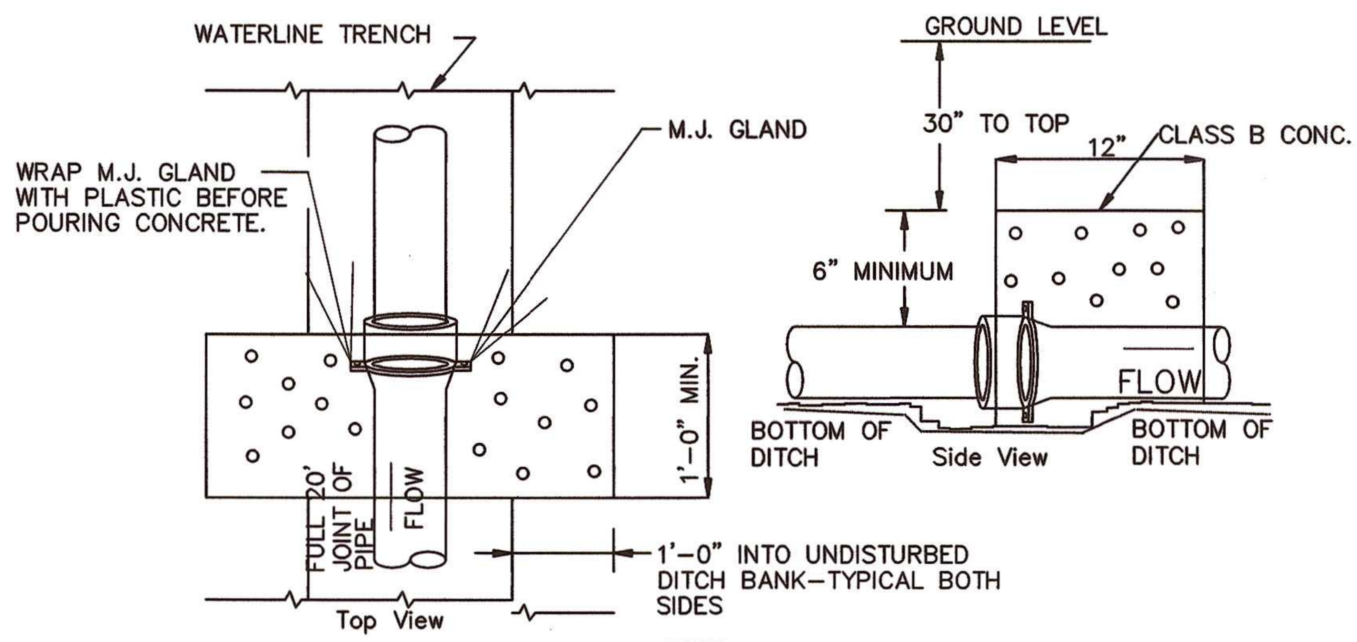

NOTE: A single M.J. Gland should slide up on the bell end.

CONCRETE ANCHOR BLOCK DETAIL
FOR WATERLINE INSTALLATION
N.T.S.

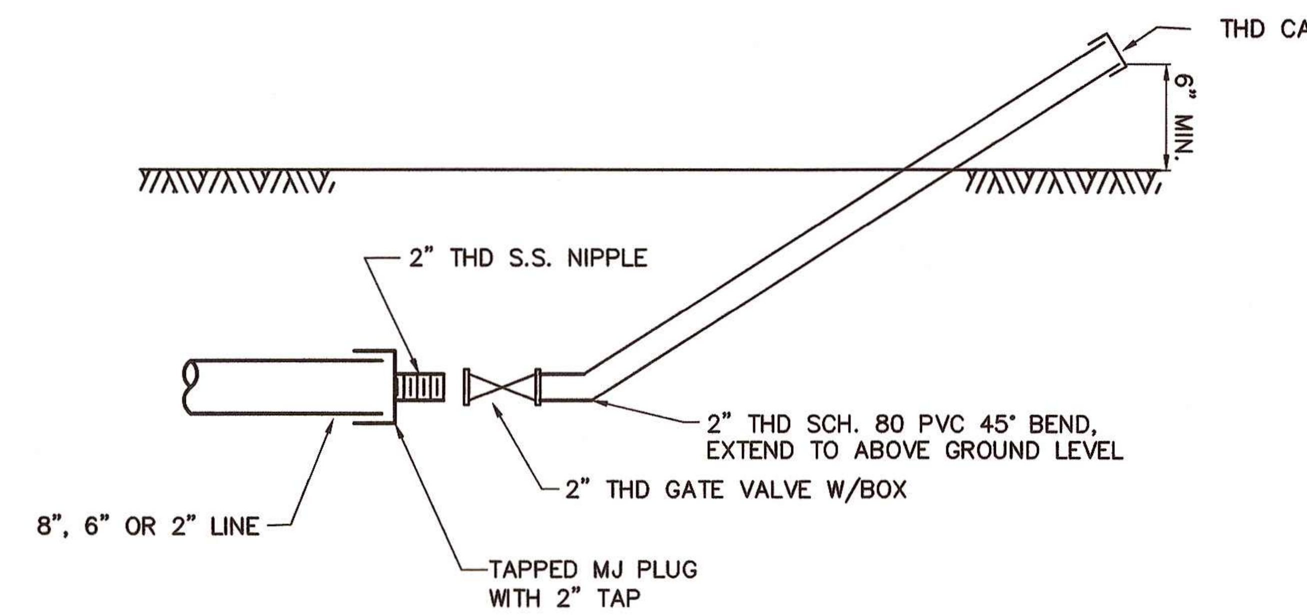

CONVENTIONAL BLOW–OFF

(AT END OF DEAD–END LINE
OR AS DIRECTED BY ENGINEER)

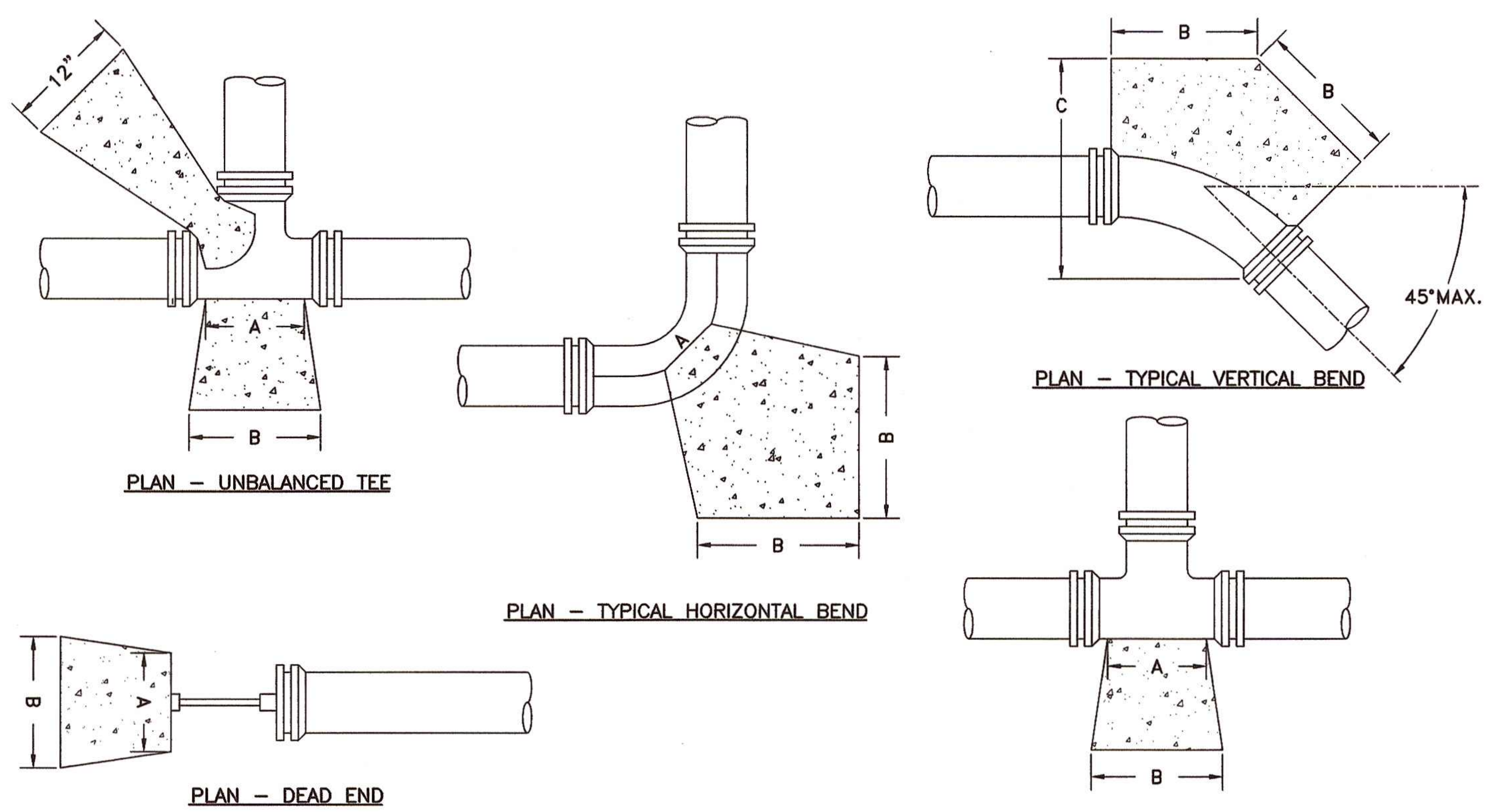

SIZE OF PIPE	TEE A	TEE B	TEE C	DEAD END A	DEAD END B	DEAD END C	90° BEND & UNBAL. TEE A	90° BEND & UNBAL. TEE B	90° BEND & UNBAL. TEE C	45° BEND A	45° BEND B	45° BEND C	22 1/2° BEND A	22 1/2° BEND B	22 1/2° BEND C	11 1/4° BEND A	11 1/4° BEND B	11 1/4° BEND C
1–1/2" to 4"	12"	24"	12"	4"	10"	11"	9"	12"	12"	9"	12"	12"	9"	7"	12"	6"	12"	4"
6"	12"	30"	18"	5"	15"	17"	12"	15"	24"	9"	12"	18"	9"	10"	12"	9"	12"	6"
8"	18"	36"	24"	7"	20"	21"	12"	24"	24"	9"	18"	20"	9"	12"	16"	9"	12"	8"
10"	21"	48"	27"	9"	24"	28"	16"	26"	36"	9"	24"	21"	9"	15"	18"	9"	12"	12"
12"	48"	56"	18"	11"	30"	31"	18"	36"	36"	12"	30"	24"	12"	18"	21"	12"	14"	15"
16"	54"	66"	18"	12"	36"	36"	21"	42"	42"	12"	51"	24"	12"	28"	24"	12"	16"	16"

CONCRETE THRUST BLOCK

NOTES:

1. TABLE DIMENSIONS ARE BASED ON SOIL RESISTANCE FOR UNDISTURBED SAND–GRAVEL CEMENTED WITH CLAY. FOR OTHER SOIL CONDITIONS, THE DIMENSIONS SHALL BE INCREASED BY THE FOLLOWING FACTORS:

   SAND 2
   SAND & GRAVEL 1.33
   SHALE 0.4

2. WHEN EXCAVATION OCCURS IN SOFT CLAY, PEAT, OR MUCK, CONTRACTOR SHALL USE RESTRAINED JOINTS.
3. CONCRETE THRUST BLOCKS SHALL BE 300psi CLASS B AND POURED AGAINST UNDISTURBED EARTH.

TOWN OF JASPER UTILITY RELOCATION
ED FREEMAN: 423–942–3110

CTI PROJECT NO. C06089–12

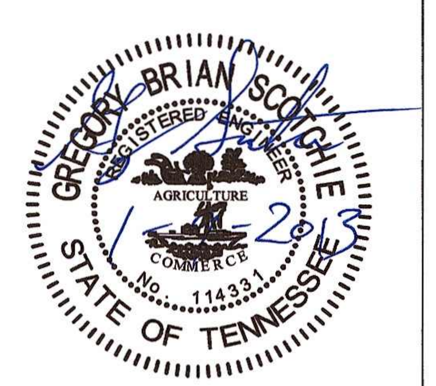

CTI ENGINEERS, INC.
1122 RIVERFRONT PARKWAY
CHATTANOOGA, TN 37402
423-267-7613

TOWN OF JASPER
UTILITY RELOCATION

STANDARD WATER
DETAILS
SHEET 1 OF 2

TENNESSEE D.O.T.
DESIGN DIVISION
FILE NO.

CTI PROJECT: C06089-12 Highway 41/SR 27 Water Line Relocations, DRAWING: ALL DETAILS (350736v11/1/9/13 12:23PM), LAYOUT: W2

DATE OF PRINT: 1/9/2013 1:12 PM

$$$$SYTIME$$$$$$
$$$$DGNSPEC$$

TYPE	YEAR	PROJECT NO.	SHEET NO.
R.O.W.	2012	STP-150(4)	U2-6

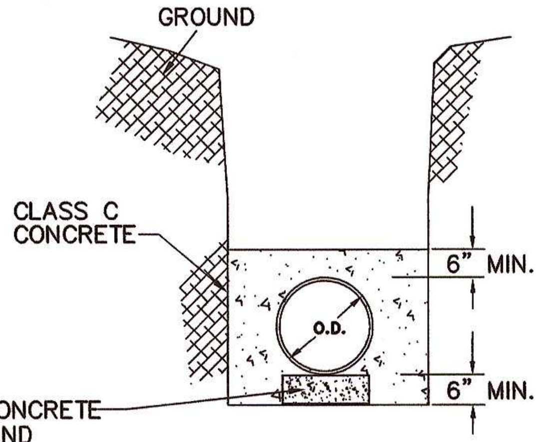

CONCRETE ENCASEMENT
NTS

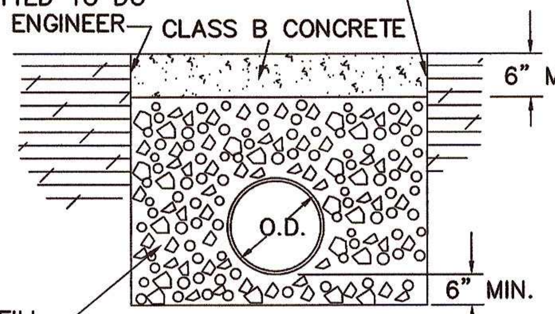

NOTE:
INSTALL CONCRETE CAP WHERE DIRECTED BY ENGINEER OR AS SHOWN IN PLANS. GENERALLY, CAP SHALL BE IN CREEKS TO RESTORE CREEK ROCK BOTTOM AND PREVENT PIPE WASHOUT.

CONCRETE CAP
NTS

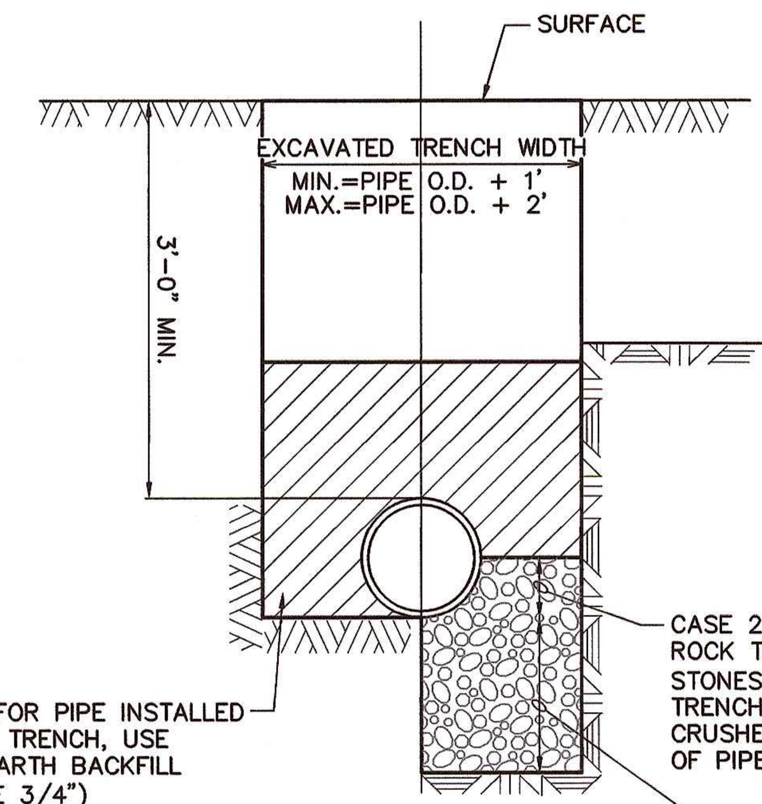

DUCTILE IRON PIPE INSTALLATION DETAIL
NTS

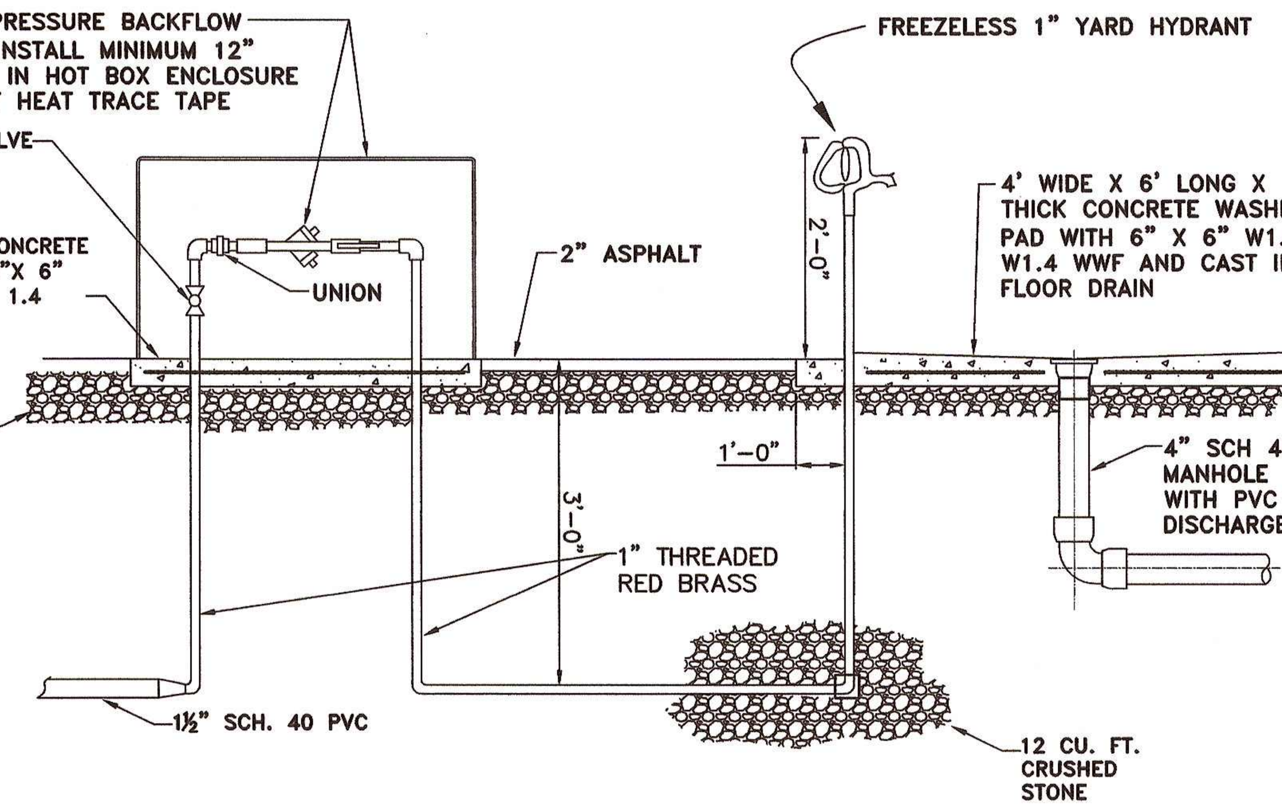

WATER HYDRANT ASSEMBLY DETAIL
NOT TO SCALE

FOR DUCTILE IRON PIPE

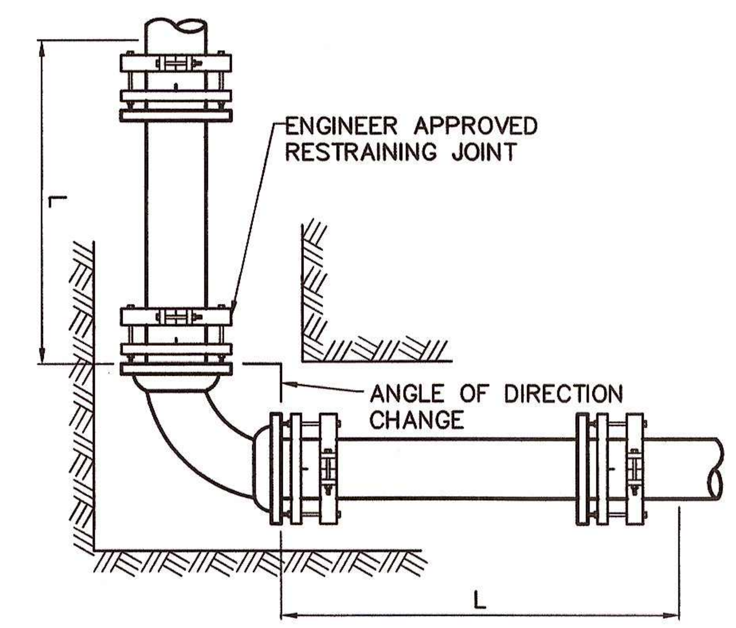

PLAN

NOTES:

1. THE FOLLOWING JOINTS MUST BE RESTRAINED IN ALL APPLICATIONS:

BENDS	CAPS
TEES	PLUGS
WYES	HYDRANTS
OFFSET	REDUCERS

2. MECHANICAL JOINTS SHALL BE RESTRAINED WITH EBBA MEG-A-LUG SERIES 1100, UNI-FLANGE SERIES 1400, OR APPROVED EQUAL.
PUSH-ON JOINTS SHALL BE RESTRAINED WITH EBBA MEG-A-LUG SERIES 1700, U.S. PIPE FIELD LOK 350 GASKET (WITH U.S. PIPE TYTON PIPE OR FITTINGS), AMERICAN DUCTILE IRON PIPE'S FAST GRIP GASKET (WITH STANDARD AMERICAN DUCTILE IRON FASTITE PIPE), OR APPROVED EQUAL.

3. RESTRAIN ONE JOINT BEYOND THE MINIMUM LENGTH FOR ALL LENGTHS OVER 10 FEET FROM THE LAST RESTRAINED JOINT.

MECHANICALLY RESTRAINED JOINT DETAIL
NOT TO SCALE

L = MINIMUM LENGTH TO BE RESTRAINED ON EACH SIDE OF FITTING (FEET)

TEST PRESSURE - 150 psi					
NOM. PIPE SIZE (IN.)	ELBOWS (DEGREES)				TEES, VALVES, DEAD-ENDS
	11¼	22½	45	90	
6	4	7	15	36	31
12	7	14	28	68	59

COMMENTS AND ASSUMPTIONS:

THE TABULATED VALUES SHOWN WERE GENERATED USING THE DIPRA COMPUTER PROGRAM.
SOIL TYPE: CON-GRAN

TRENCH TYPE: 2 (FLAT-BOTTOM TRENCH BACKFILL LIGHTLY CONSOLIDATED TO CENTERLINE OF PIPE).

DEPTH OF COVER TO TOP OF PIPE: 2.5 FEET
SAFETY FACTOR: 1.5

TOWN OF JASPER UTILITY RELOCATION
ED FREEMAN: 423-942-3110

CTI PROJECT NO. C06089-12

1122 RIVERFRONT PARKWAY
CHATTANOOGA, TN 37402
423-267-7613

TOWN OF JASPER
UTILITY RELOCATION

STANDARD WATER
DETAILS
SHEET 2 OF 2

TENNESSEE D.O.T.
DESIGN DIVISION
FILE NO.

CTI PROJECT: C06089-12 Highway 41/SR 27 Water Line Relocations, DRAWING: ALL DETAILS (350736v11/1/9/13 12:23PM), LAYOUT: S1

DATE OF PRINT: 1/9/2013 1:12 PM

$$$$SYTIME$$$$$$
$$$DGNSPEC$$$

TYPE	YEAR	PROJECT NO.	SHEET NO.
R.O.W.	2012	STP-150(4)	U2-7

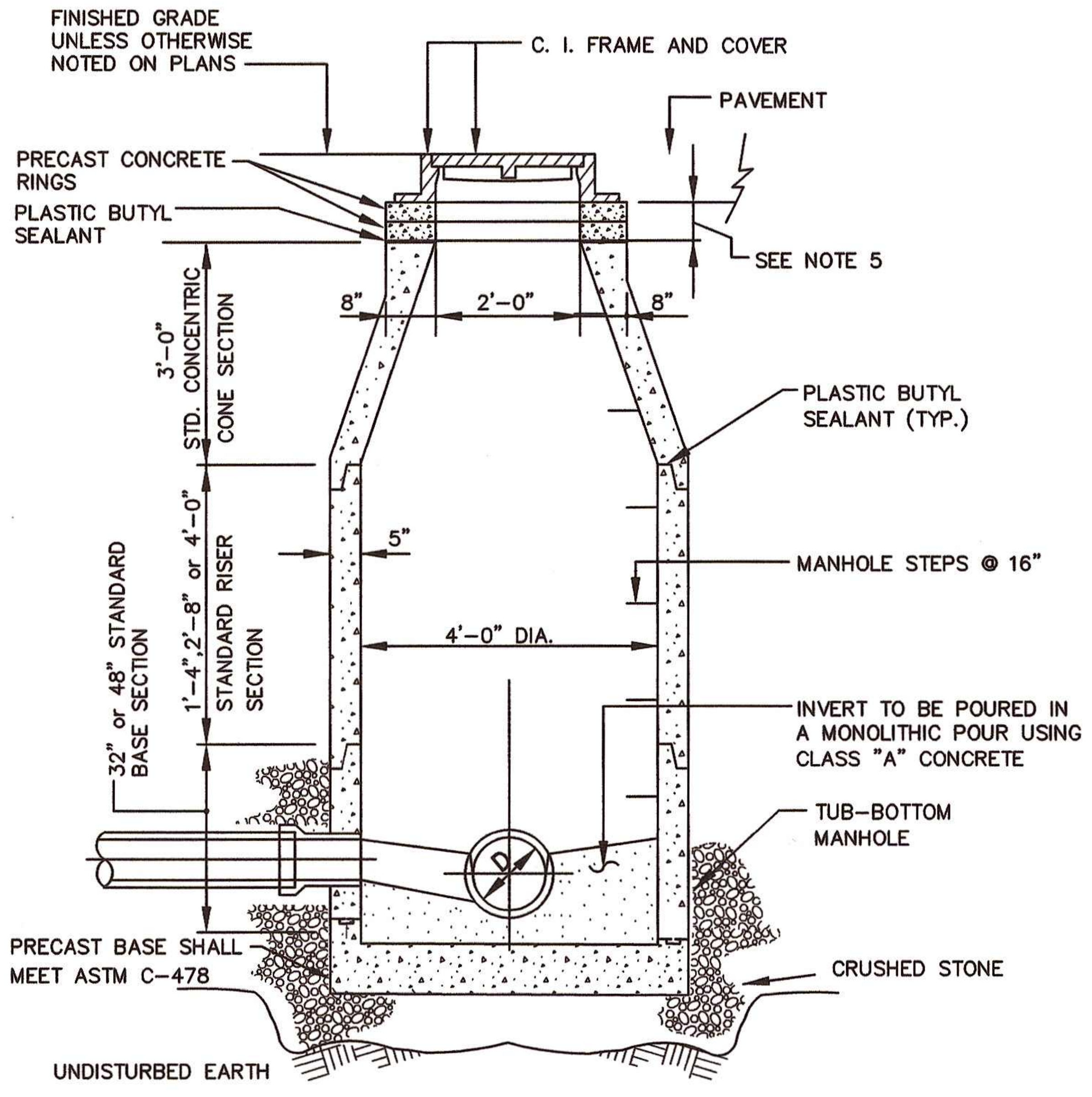

SECTION (A / C200)
NOT TO SCALE

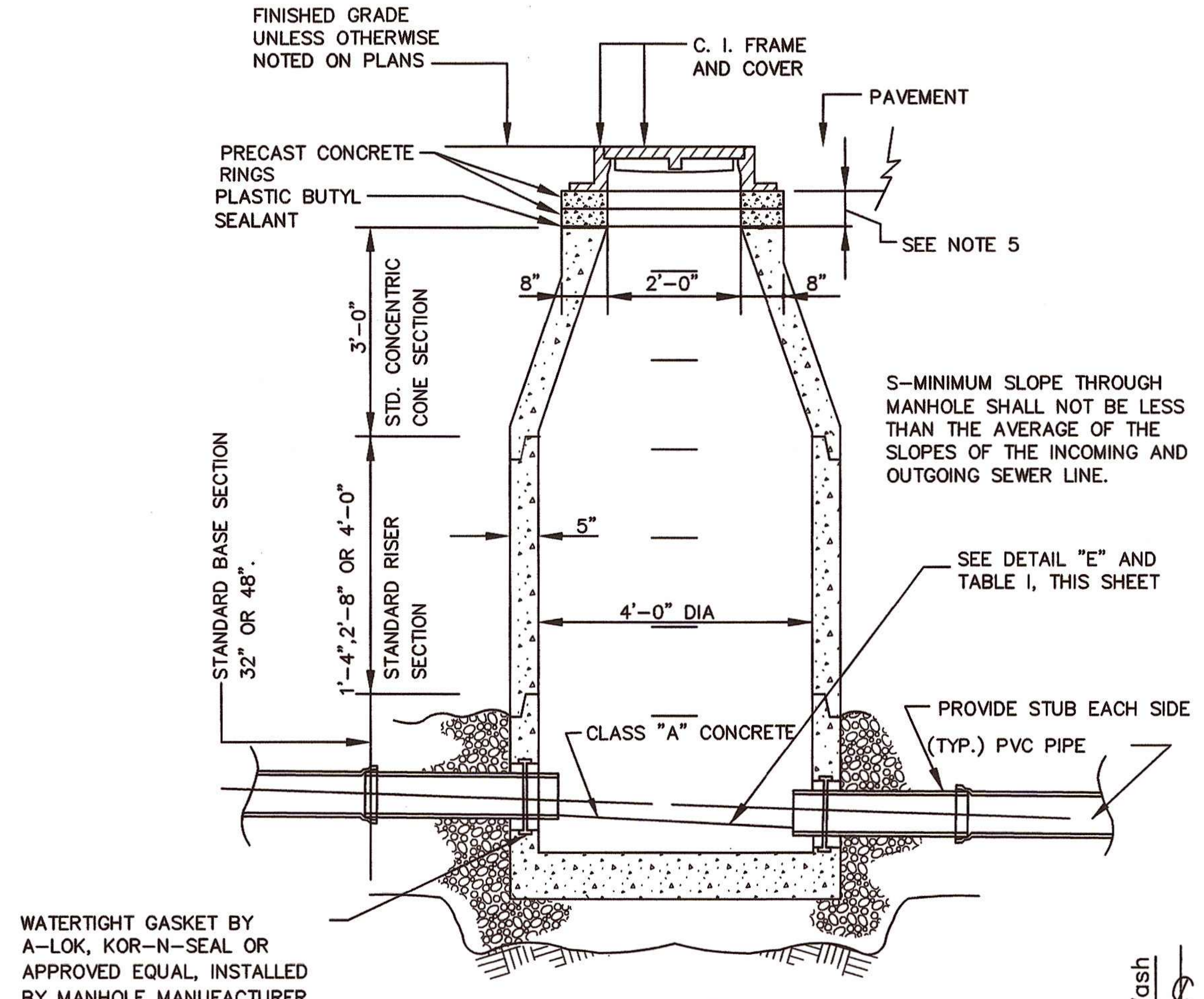

SECTION (B / C200)
NOT TO SCALE

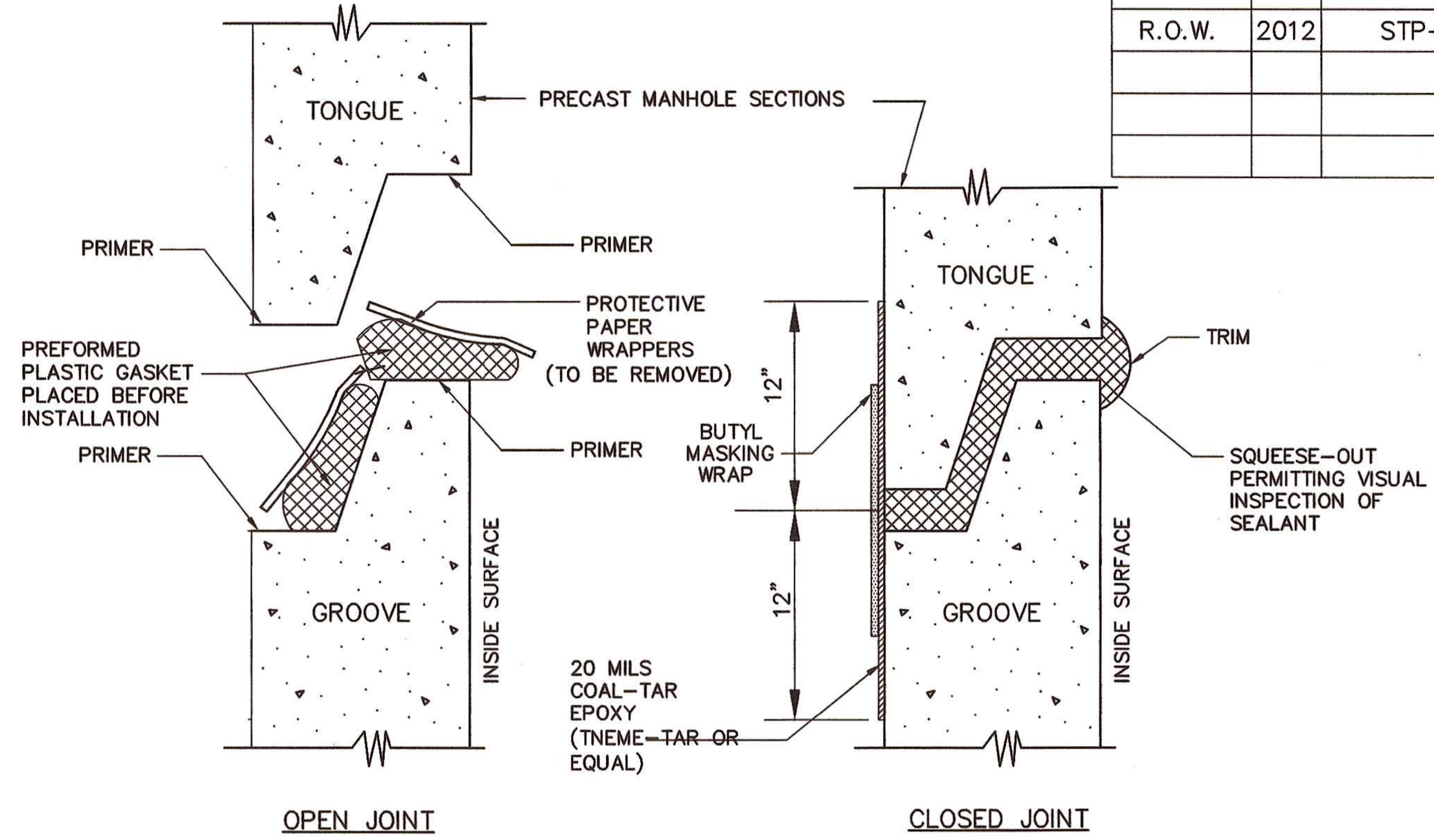

JOINT AND GASKET FOR PRECAST MANHOLE SECTIONS
NOT TO SCALE

NOTE:
"H" & "T" dimensions apply at both the upstream & downstream edge of M.H.

TABLE I		
"D"	"T"	"H"
Inside Dia. pipe	Vertical Tangent	Height of Wa. Table
8"	2 1/2"	6 1/2"
10"	3"	8"
12"	3 1/2"	9 1/2"

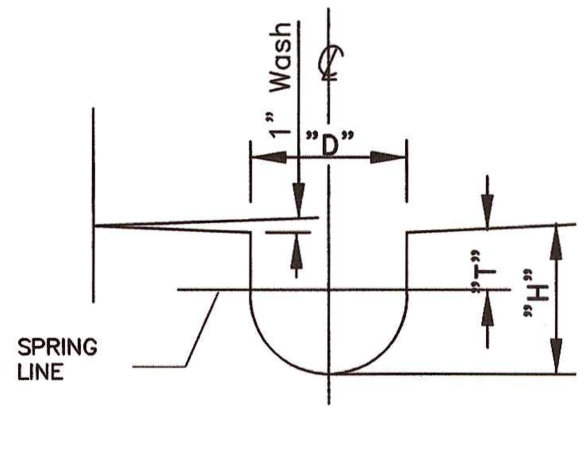

DETAIL E
NOT TO SCALE

TABLE II GOVERNING DIMENSIONS FOR MANHOLES			
D-PIPE SIZE	△ ANGLE	BASE DIAMETER	"R" *
8" - 12"	0° TO 90°	4'	1' - 6"
15"	0° TO 60°	4'	1' - 10"
15"	60° TO 90°	4'	1' - 10"

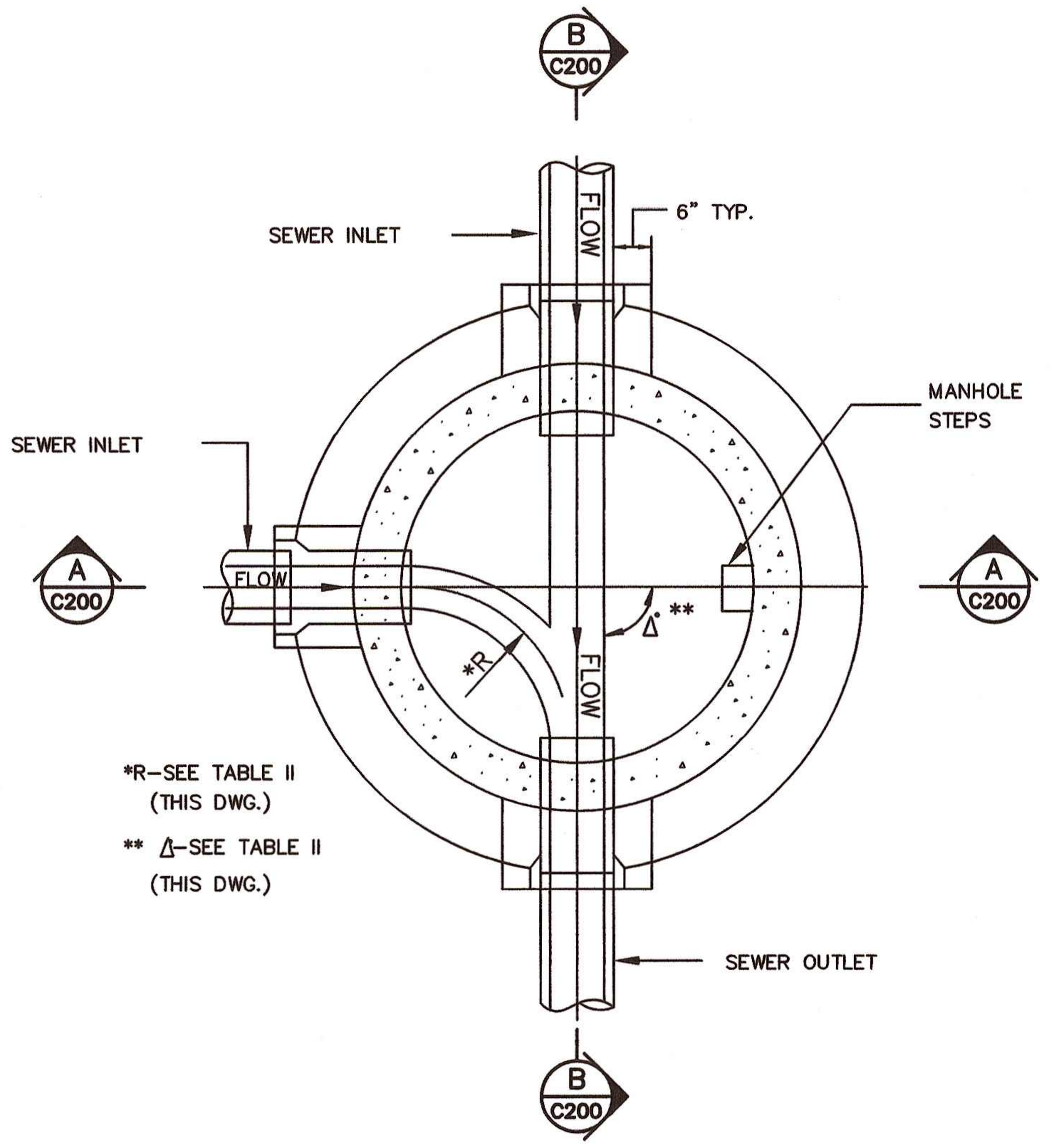

SECTIONAL PLAN
STANDARD PRECAST 4'-0" DIAMETER MANHOLE
NOT TO SCALE

NOTE: 5'-0" & 6'-0" DIAMETER MANHOLES MAY BE SIMILAR DESIGN IF APPROVED BY THE ENGINEER.

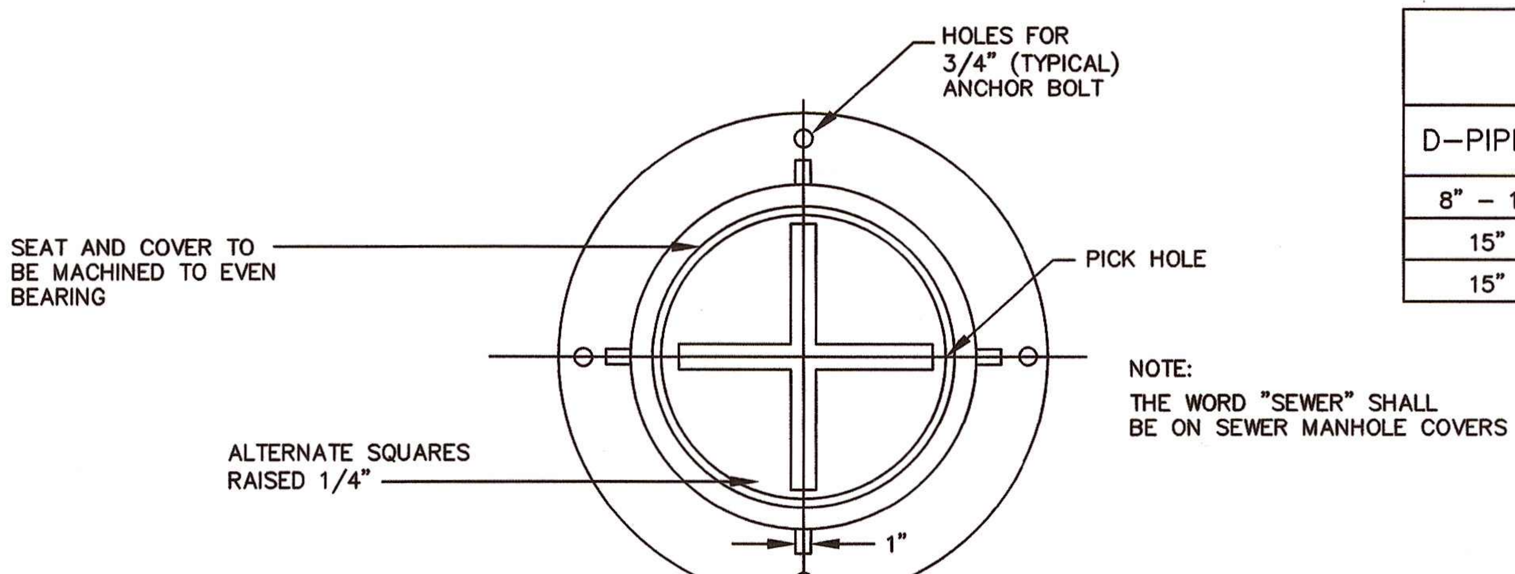

NOTE:
THE WORD "SEWER" SHALL BE ON SEWER MANHOLE COVERS

PLAN

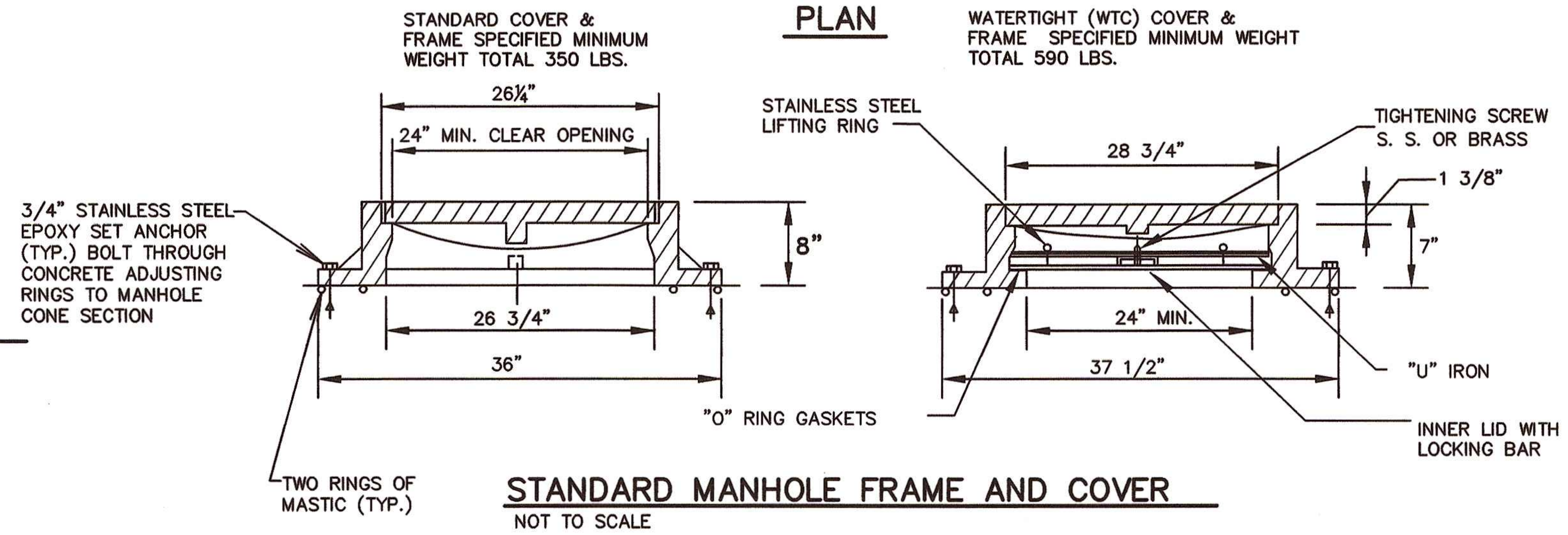

STANDARD MANHOLE FRAME AND COVER
NOT TO SCALE

STD. FRAME AND COVER TO BE ACHESON FOUNDRY # A-2024-81H, OR EQUAL
WATER TIGHT MANHOLE FRAME AND COVER TO BE ACHESON FOUNDRY A-2624-71H

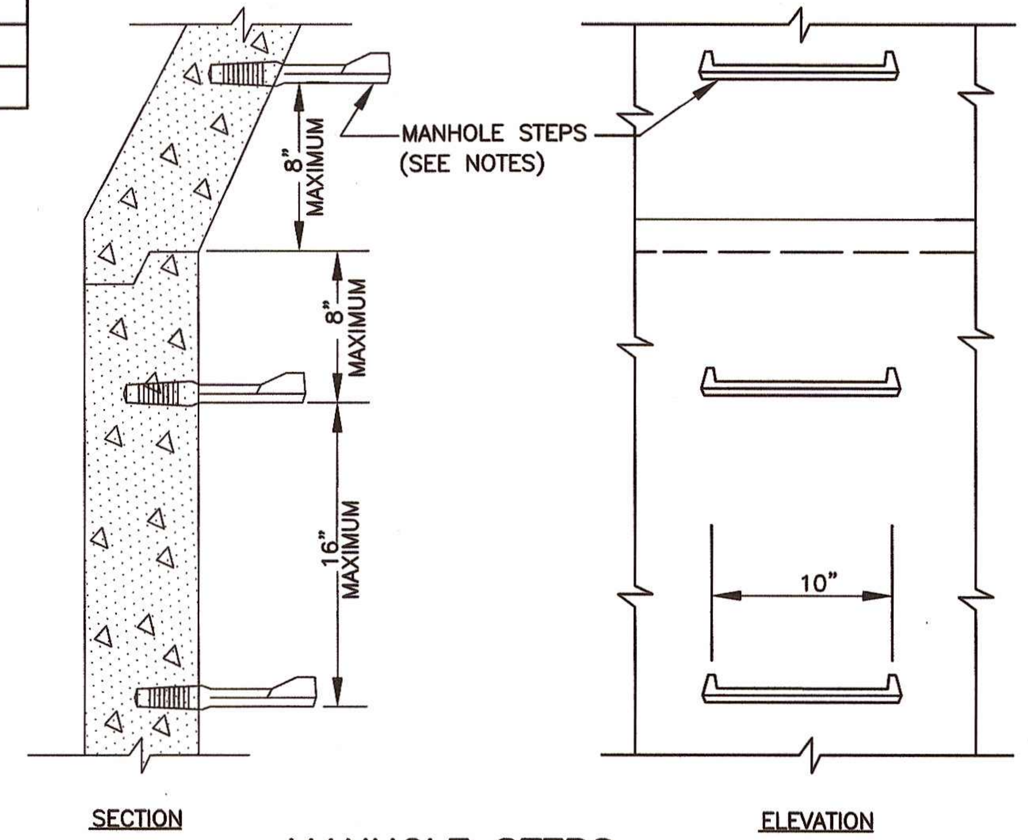

MANHOLE STEPS
NOT TO SCALE

GENERAL NOTES:

1. WHERE LATERAL SEWERS ARE SHOWN FOR FUTURE CONSTRUCTION, INSTALL A PLUGGED STUB OR DROP CONNECTION WITH PLUGGED STUB AS CALLED FOR ON PLAN AND PROFILE DRAWINGS.
2. MANHOLE STEPS SHALL BE ACHESON FOUNDRY CO. NO. A-1984-D (STEEL REINFORCED RUBBER) OR EQUAL.
3. RISER SECTIONS SHALL BE SET SO THAT STEPS ALIGN VERTICALLY.
4. FOR BRINGING MANHOLE FRAME AND COVER TO GRADE, USE PRECAST CONCRETE OR CAST IRON RINGS.
5. PLASTIC BUTYL SEALANT TO BE FURNISHED AND INSTALLED BETWEEN MANHOLE CONE AND FRAME AND LEVELING RINGS COST TO BE INCLUDED IN THE UNIT PRICE BID FOR MANHOLES 0.0' TO 6.0' DEEP. NO SEPARATE PAYMENT ALLOWED.
6. ALL MANHOLES SHALL USE STANDARD CONCENTRIC CONES.
7. ALL MANHOLES SHALL BE VACUUM TESTED AFTER INSTALLATION.
8. PROVIDE PIPE JOINTS AT OUTSIDE FACE OF MANHOLES AS SHOWN.

TOWN OF JASPER UTILITY RELOCATION
ED FREEMAN: 423-942-3110

CTI PROJECT NO. C06089-12

GREGORY BRIAN SCOTCHIE
REGISTERED ENGINEER
AGRICULTURE COMMERCE
No. 114331
STATE OF TENNESSEE
1-9-2013

CTI ENGINEERS, INC.
1122 RIVERFRONT PARKWAY
CHATTANOOGA, TN 37402
423-267-7613

TOWN OF JASPER
UTILITY RELOCATION

STANDARD SEWER
MANHOLE DETAILS
SHEET 1 OF 1

TYPE	YEAR	PROJECT NO.	SHEET NO.
R.O.W.	2012	STP–150(4)	U2–8

TENNESSEE D.O.T.
DESIGN DIVISION
FILE NO.

CTI PROJECT: C06089–12 Highway 41/SR 27 Water Line Relocations, DRAWING: ALL DETAILS (350736v11/1/9/13 12:23PM), LAYOUT: S2

DATE OF PRINT: 1/9/2013 1:11 PM

$$$$SYTIME$$$$$$
$$$$DGNSPEC$$

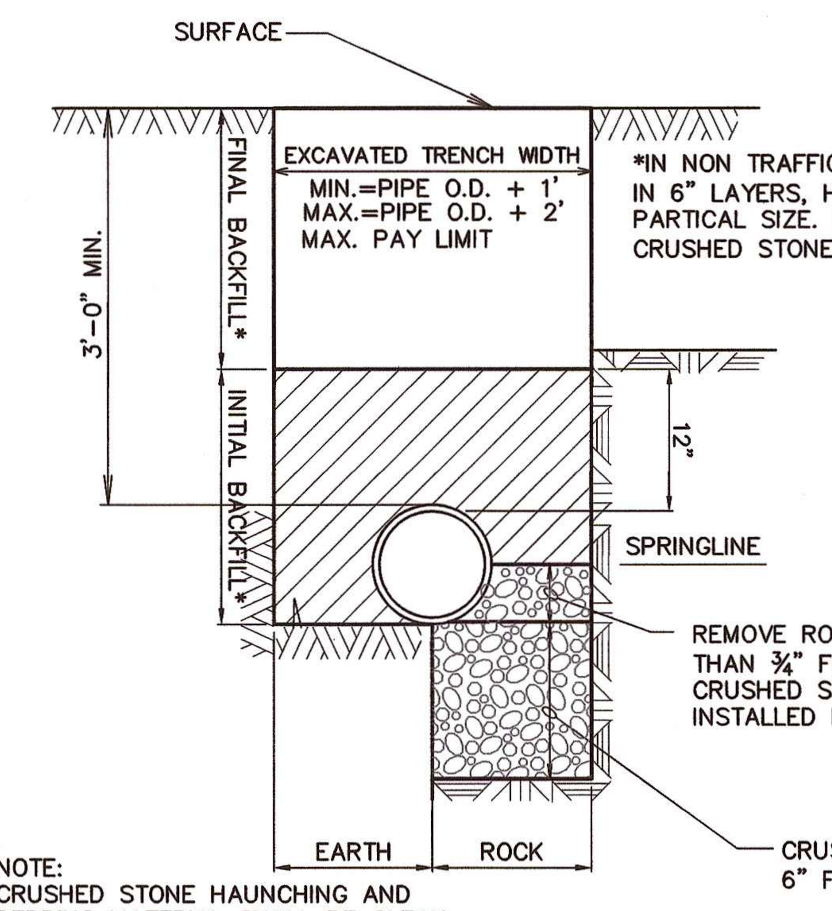

*IN NON TRAFFIC AREA USE SELECT EARTH BACKFILL IN 6" LAYERS, HAND COMPACTED WITH MAX ¾" PARTICAL SIZE. IN TRAFFIC AREAS USE FULL DEPTH CRUSHED STONE ¾".

REMOVE ROCK OR STONES LARGER THAN ¾" FROM TRENCH PLACE CRUSHED STONE BEDDING FOR PIPE INSTALLED IN ROCK TRENCH

CRUSHED STONE ROCK TRENCH BEDDING. 6" FOR PIPE 6" OR LESS, 8" FOR LARGER PIPE

NOTE:
CRUSHED STONE HAUNCHING AND BEDDING MATERIAL SHALL BE CLEAN GRADED CRUSHED ROCK, SIZE 7 (½" TO NO.4)

DUCTILE IRON PIPE INSTALLATION DETAIL

NOT TO SCALE

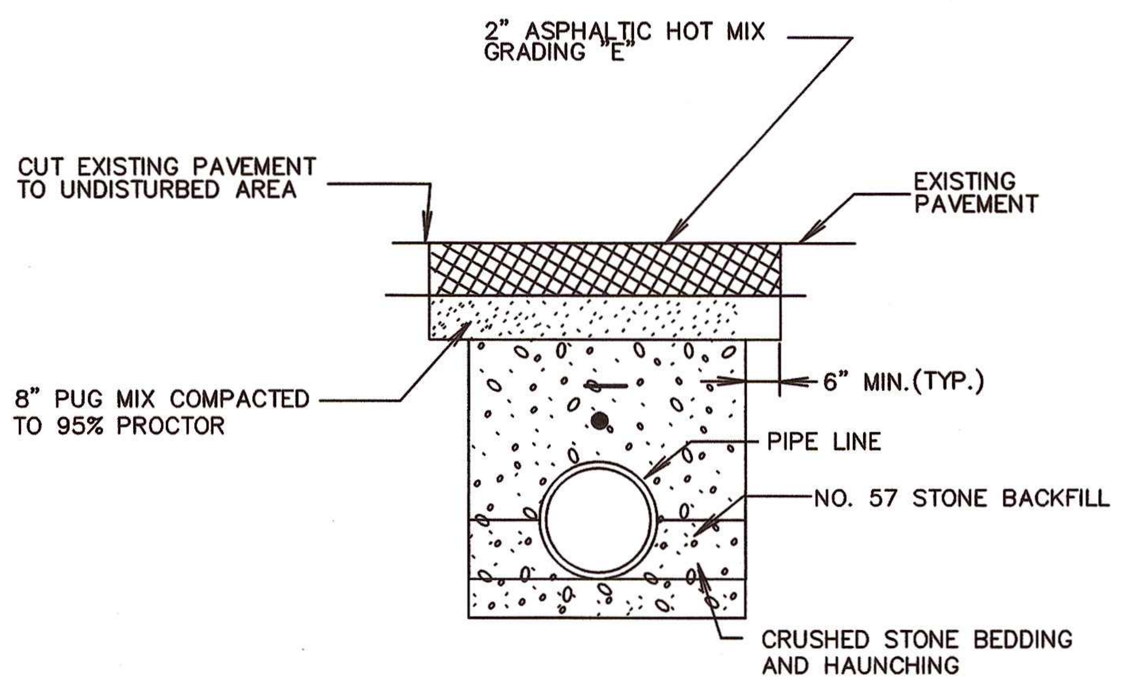

1. TO BE USED ON HOT MIX PAVED DRIVEWAYS AND PARKING AREAS AND ELSEWHERE AS DESIGNATED BY THE ENGINEER. COST OF SAW CUTTING, COMPACTING, PUG MIX, HOT MIX, ETC. TO BE INCLUDED IN THE UNIT PRICE FOR HOT MIX PAVEMENT IN THE BID SCHEDULE, AND SHALL BE PAID FOR ON A LINEAR FOOT BASIS, COMPLETE IN PLACE.

2. IT IS THE INTENTION OF THE OWNER TO INSTALL ALL LINES OUT OF PAVEMENT IF POSSIBLE, IN ROAD SHOULDERS OR DITCHES; IF LINE IS INSTALLED UNDER PAVEMENT FOR CONVENIENCE OF CONTRACTOR, NO SEPARATE PAYMENT WILL BE MADE FOR EXTRA PAVEMENT AND CRUSHED ROCK BACKFILL REQUIRED.

PAVEMENT REPLACEMENT DETAIL–TYPE "8" (ASPHALT DRIVEWAYS AND PARKING APRONS)

NOT TO SCALE

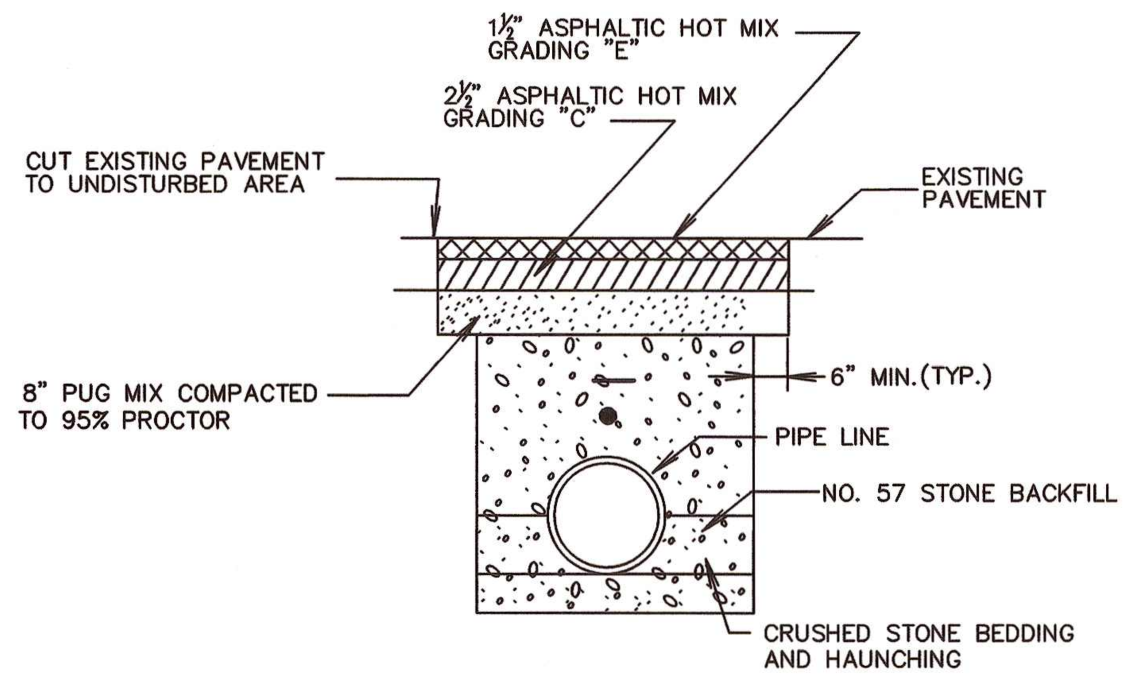

1. TO BE USED ON HOT MIX PAVED COUNTY ROADS AND ELSEWHERE AS DESIGNATED BY THE ENGINEER. COST OF SAW CUTTING, COMPACTING, PUG MIX, HOT MIX, ETC. TO BE INCLUDED IN THE UNIT PRICE FOR HOT MIX PAVEMENT IN THE BID SCHEDULE, AND SHALL BE PAID FOR ON A LINEAR FOOT BASIS, COMPLETE IN PLACE.

2. IT IS THE INTENTION OF THE OWNER TO INSTALL ALL LINES OUT OF PAVEMENT IF POSSIBLE, IN ROAD SHOULDERS OR DITCHES; IF LINE IS INSTALLED UNDER PAVEMENT FOR CONVENIENCE OF CONTRACTOR, NO SEPARATE PAYMENT WILL BE MADE FOR EXTRA PAVEMENT AND CRUSHED ROCK BACKFILL REQUIRED.

3. CONTRACTOR IS RESPONSIBLE FOR OBTAINING ROAD CUT PERMITS PRIOR TO CUTTING ROADWAY PAVEMENTS.

PAVEMENT REPLACEMENT DETAIL–TYPE "6" (CITY AND COUNTY ROADS)

NOT TO SCALE

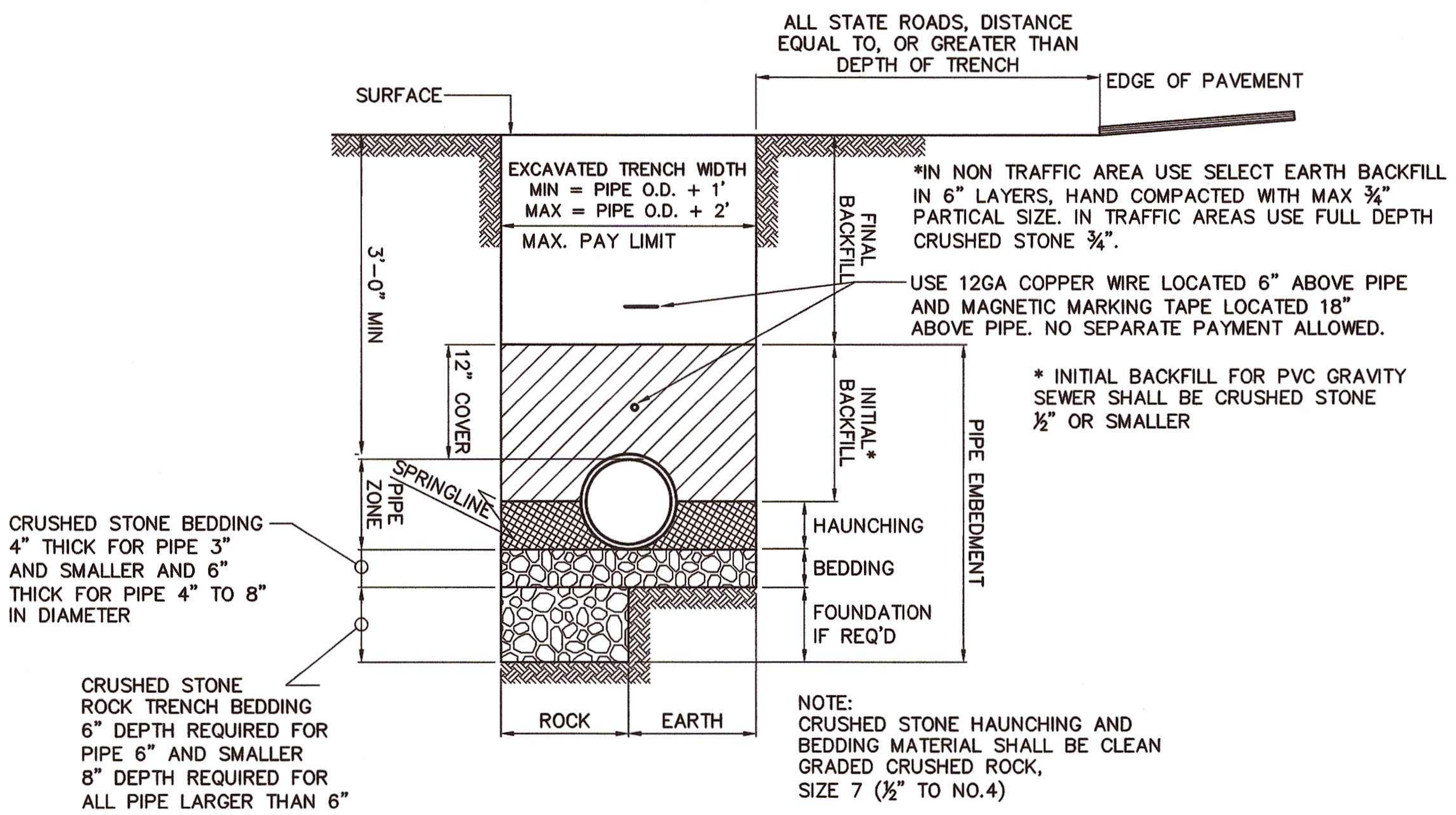

*IN NON TRAFFIC AREA USE SELECT EARTH BACKFILL IN 6" LAYERS, HAND COMPACTED WITH MAX ¾" PARTICAL SIZE. IN TRAFFIC AREAS USE FULL DEPTH CRUSHED STONE ¾".

USE 12GA COPPER WIRE LOCATED 6" ABOVE PIPE AND MAGNETIC MARKING TAPE LOCATED 18" ABOVE PIPE. NO SEPARATE PAYMENT ALLOWED.

* INITIAL BACKFILL FOR PVC GRAVITY SEWER SHALL BE CRUSHED STONE ½" OR SMALLER

CRUSHED STONE BEDDING 4" THICK FOR PIPE 3" AND SMALLER AND 6" THICK FOR PIPE 4" TO 8" IN DIAMETER

CRUSHED STONE ROCK TRENCH BEDDING 6" DEPTH REQUIRED FOR PIPE 6" AND SMALLER 8" DEPTH REQUIRED FOR ALL PIPE LARGER THAN 6"

NOTE:
CRUSHED STONE HAUNCHING AND BEDDING MATERIAL SHALL BE CLEAN GRADED CRUSHED ROCK, SIZE 7 (½" TO NO.4)

PVC PIPE INSTALLATION DETAIL

NOT TO SCALE

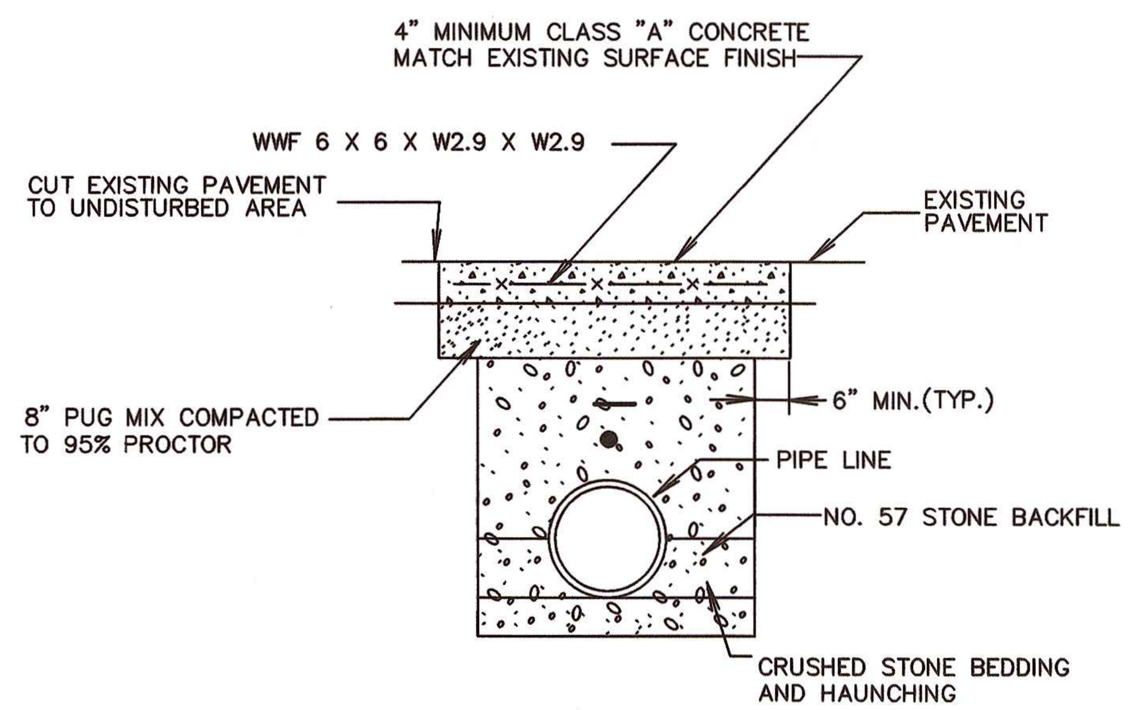

1. TO BE USED ON CONCRETE DRIVEWAYS AND PARKING AREAS AND ELSEWHERE AS DESIGNATED BY THE ENGINEER. COST OF SAW CUTTING, COMPACTING, PUG MIX, CONCRETE, ETC. TO BE INCLUDED IN THE UNIT PRICE FOR CONCRETE PAVEMENT IN THE BID SCHEDULE, AND SHALL BE PAID FOR ON A LINEAR FOOT BASIS, COMPLETE IN PLACE.

2. IT IS THE INTENTION OF THE OWNER TO INSTALL ALL LINES OUT OF PAVEMENT IF POSSIBLE, IN ROAD SHOULDERS OR DITCHES; IF LINE IS INSTALLED UNDER PAVEMENT FOR CONVENIENCE OF CONTRACTOR, NO SEPARATE PAYMENT WILL BE MADE FOR EXTRA PAVEMENT AND CRUSHED ROCK BACKFILL REQUIRED.

PAVEMENT REPLACEMENT DETAIL–TYPE "5" (CONCRETE DRIVEWAYS AND PARKING APRONS)

NOT TO SCALE

TOWN OF JASPER UTILITY RELOCATION
ED FREEMAN: 423–942–3110

CTI PROJECT NO. C06089–12

CTI ENGINEERS, INC.
1122 RIVERFRONT PARKWAY
CHATTANOOGA, TN 37402
423-267-7613

TOWN OF JASPER UTILITY RELOCATION

STANDARD SEWER DETAILS
SHEET 1 OF 2

TENNESSEE D.O.T.
DESIGN DIVISION

FILE NO.

CTI PROJECT: C06089-12 Highway 41/SR 27 Water Line Relocations, DRAWING: ALL DETAILS (350736v11/1/9/13 12:23PM), LAYOUT: S3

DATE OF PRINT: 1/9/2013 1:12 PM

$$$SYTIME$$$$$$

$$$DGNSPEC$$

TYPE	YEAR	PROJECT NO.	SHEET NO.
R.O.W.	2012	STP-150(4)	U2-9

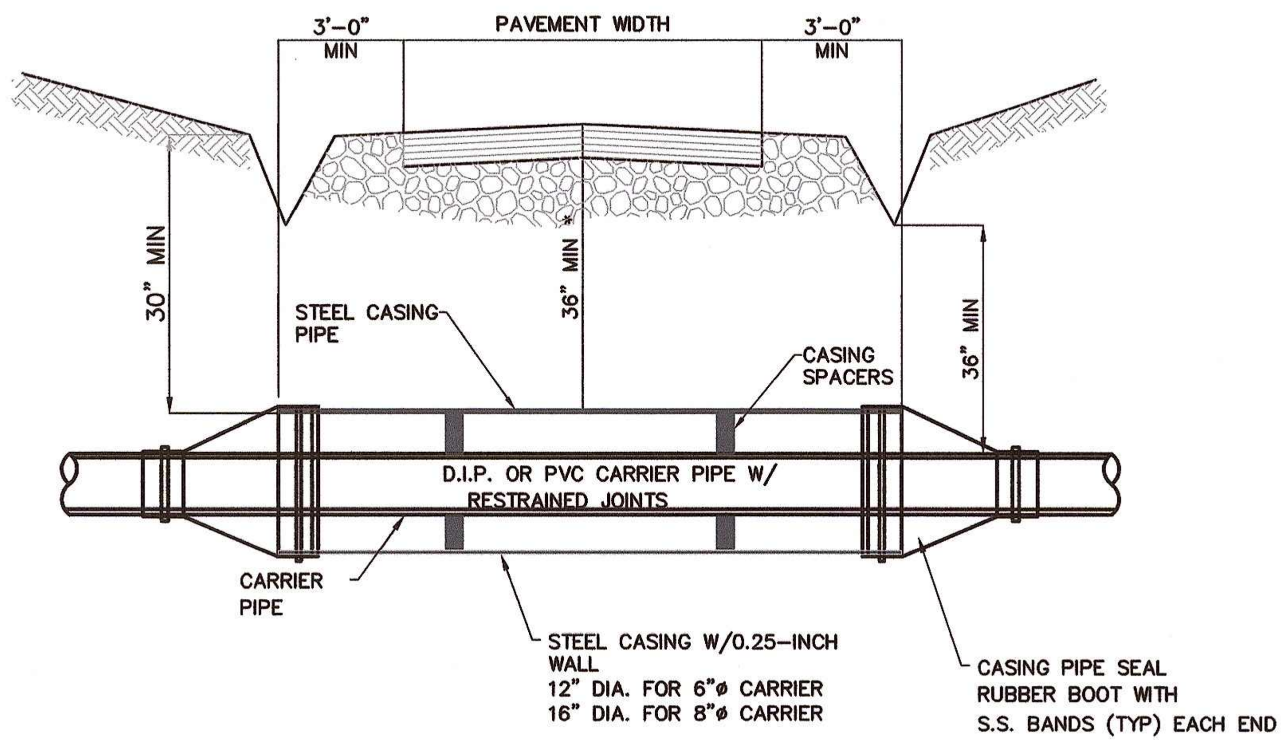

HIGHWAY CROSSING DETAIL

NOT TO SCALE

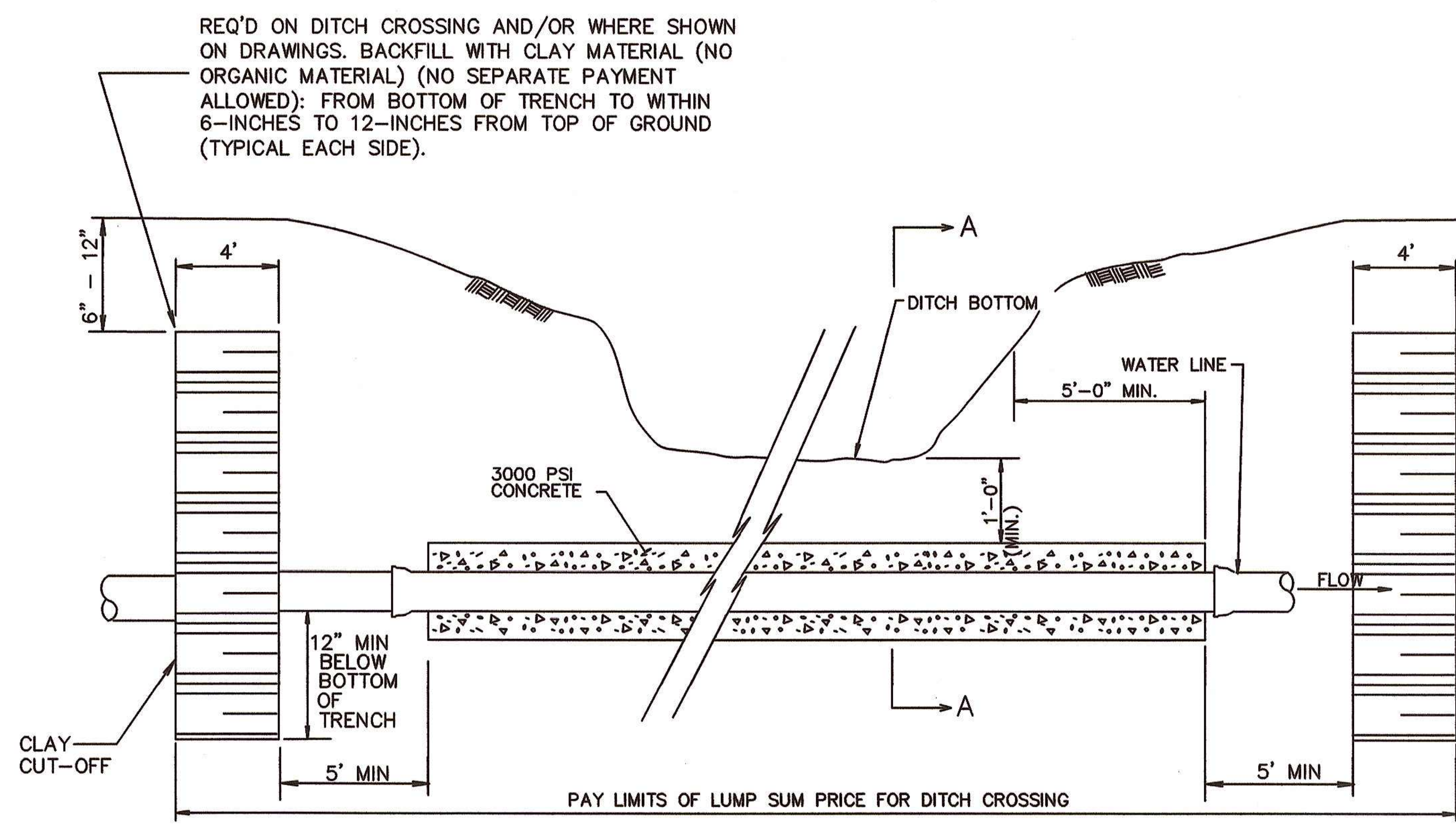

DITCH CROSSING DETAIL

NOT TO SCALE

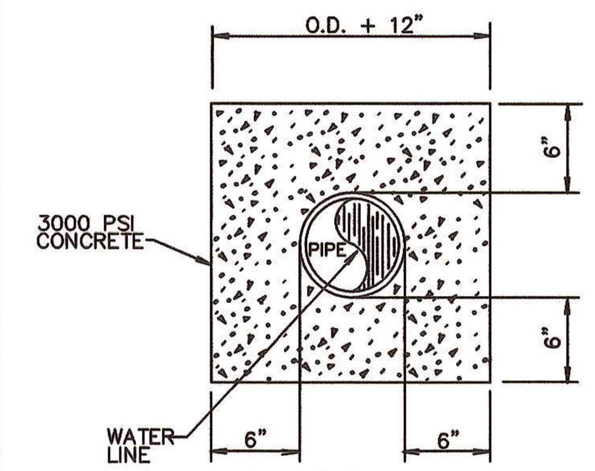

SECTION A-A

NOT TO SCALE

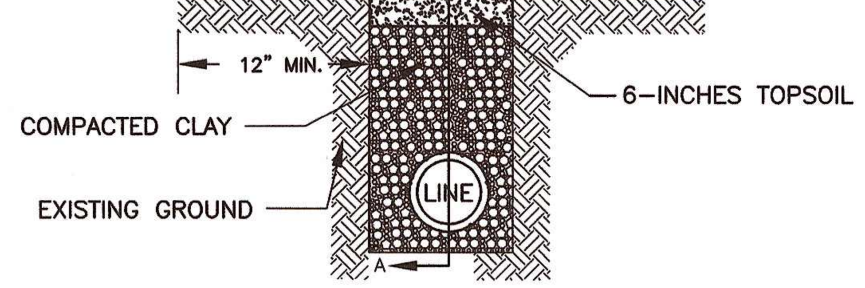

TYPICAL SECTION IN TRENCH CHECK DAM

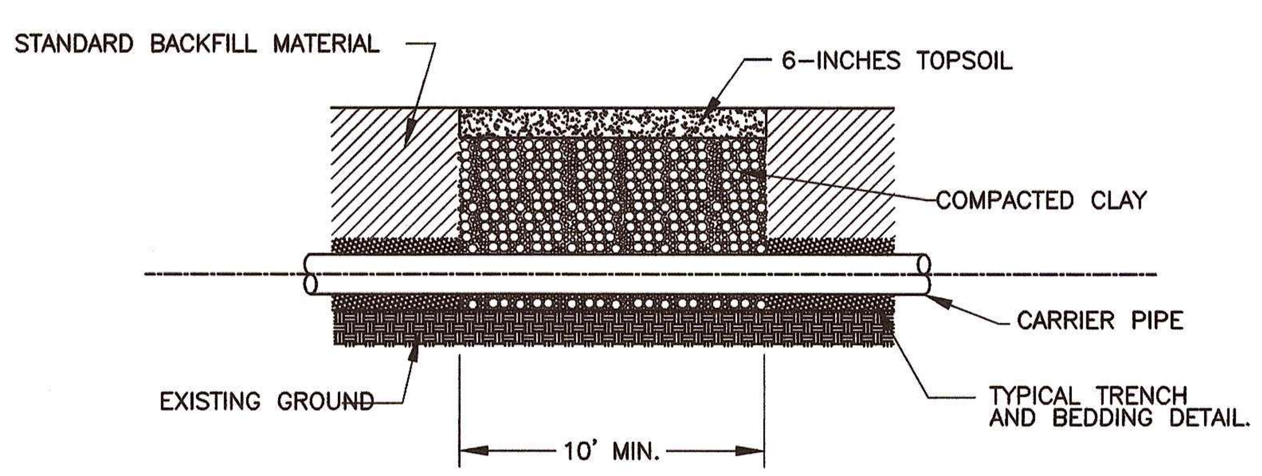

SECTION A – A

TRENCH CHECK DAM

REQUIRED AT INTERVALS OF 200 FEET
ON STEEP GRADES AND OTHERWASE
WHERE DIRECTED BY ENGINEER

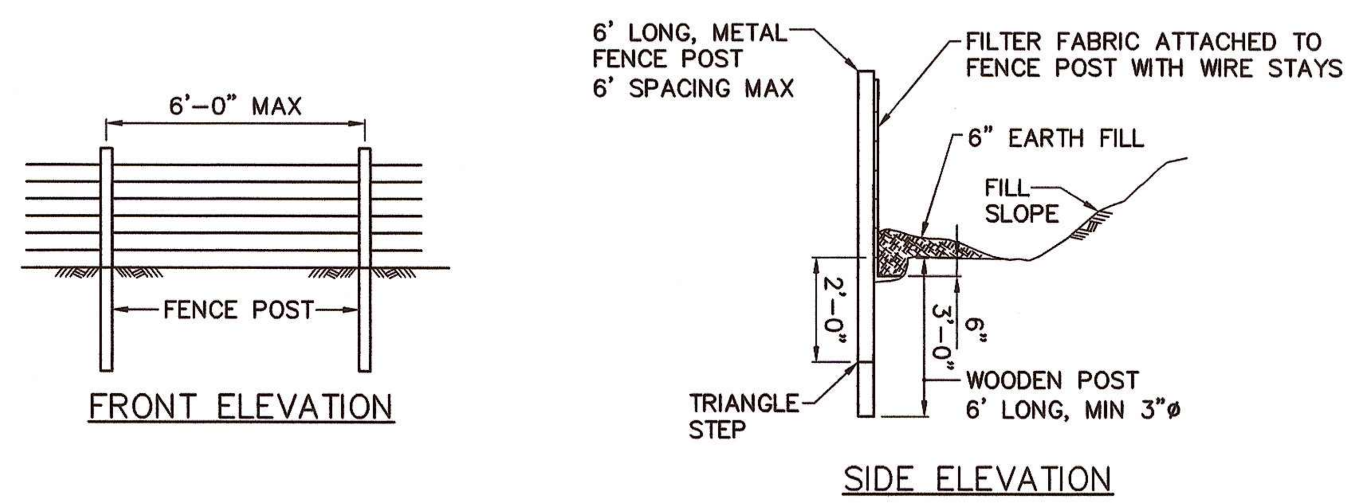

TYPICAL SILT FENCE SF DETAIL

NTS

TOWN OF JASPER UTILITY RELOCATION
ED FREEMAN: 423-942-3110

CTI PROJECT NO. C06089-12

CTI ENGINEERS, INC.

1122 RIVERFRONT PARKWAY
CHATTANOOGA, TN 37402
423-267-7613

TOWN OF JASPER
UTILITY RELOCATION

STANDARD SEWER
DETAILS
SHEET 2 OF 2