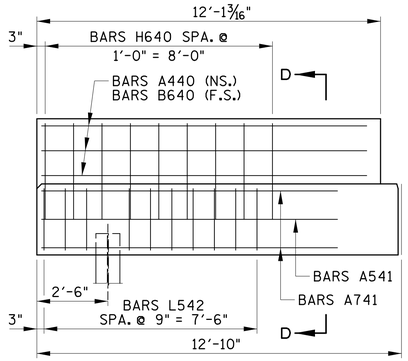

ELEVATION A-A

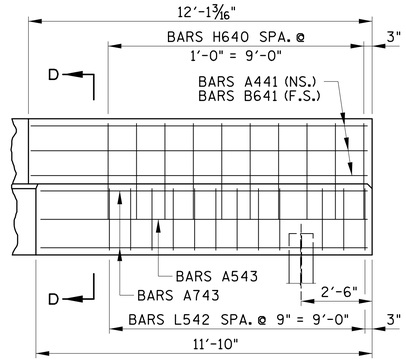

ELEVATION B-B

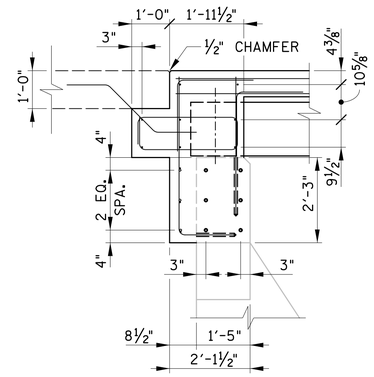

SECTION B-B

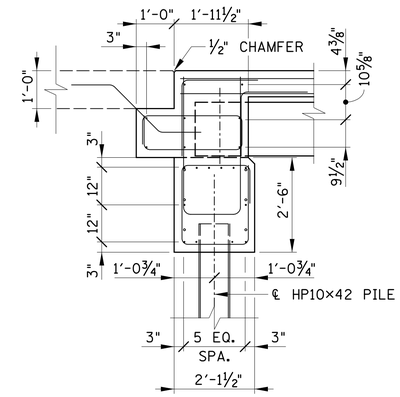

SECTION C-C

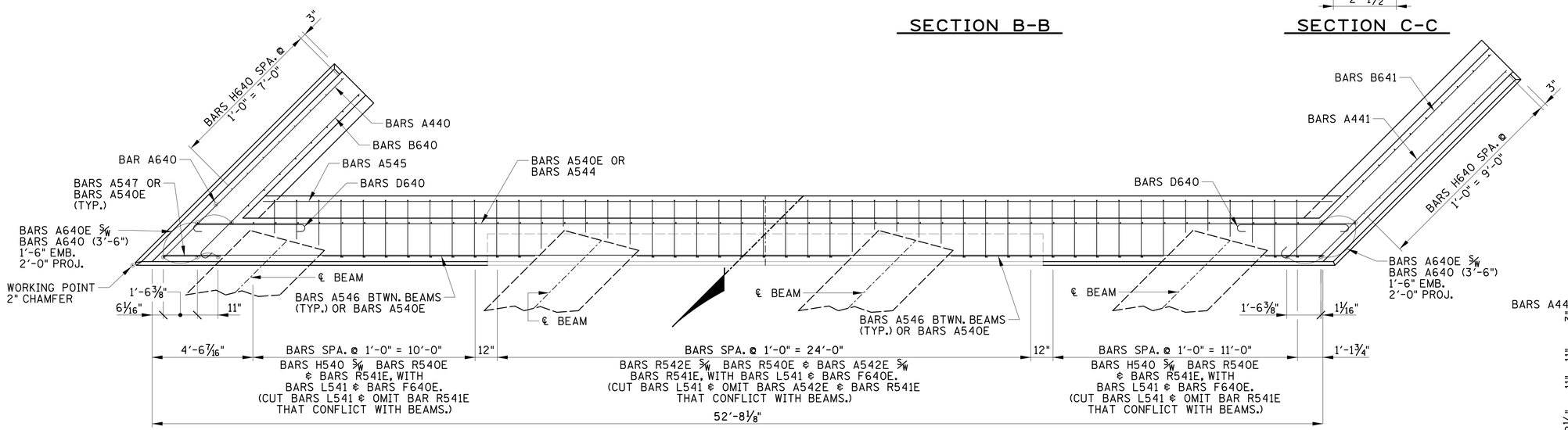

SECTION A-A

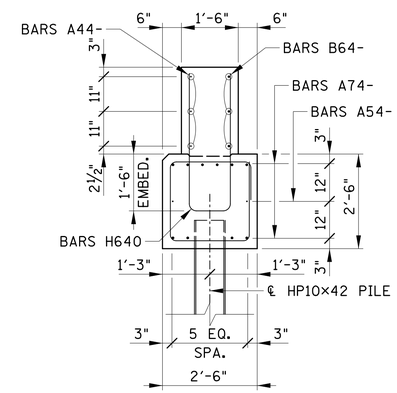

SECTION D-D

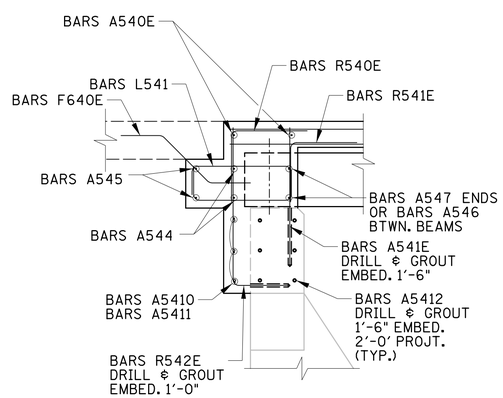

SECTION B-B

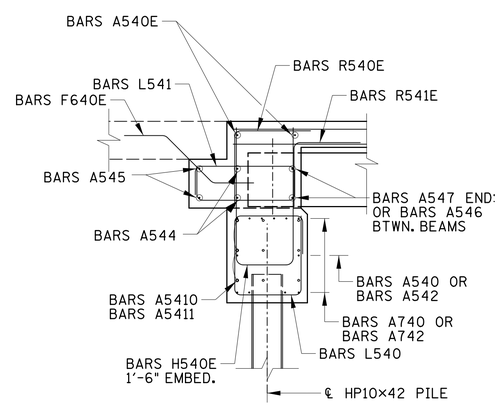

SECTION C-C

CONST. NO.		
PROJECT NO.	YEAR	SHEET NO.
85008-4206-04	2015	

REVISIONS

NO.	DATE	BY	BRIEF DESCRIPTION
1	8-25-15	TAK	REV. DETAILS

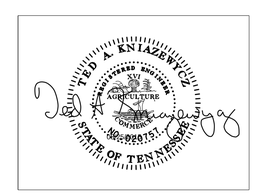

STATE OF TENNESSEE
DEPARTMENT OF TRANSPORTATION

1

ABUTMENT NO. 1 & 2 DETAILS
STATE ROUTE 260
OVER
LITTLE GOOSE CREEK
BR. NO. 85-SR260-05.58
TROUSDALE COUNTY
2015

BR-118- 53

PIN NO. 120027.00

DESIGNED BY	GRESHAM SMITH & PARTNERS	DATE	7/2014
DRAWN BY	R. PALMER	DATE	7/2014
SUPERVISED BY	T. KNIAZEWYCZ	DATE	7/2014
CHECKED BY		DATE	

GS&P
GRESHAM SMITH AND PARTNERS

gyoun
P:\2807119\b\8071b19a3.sht
8/25/2015
PRF