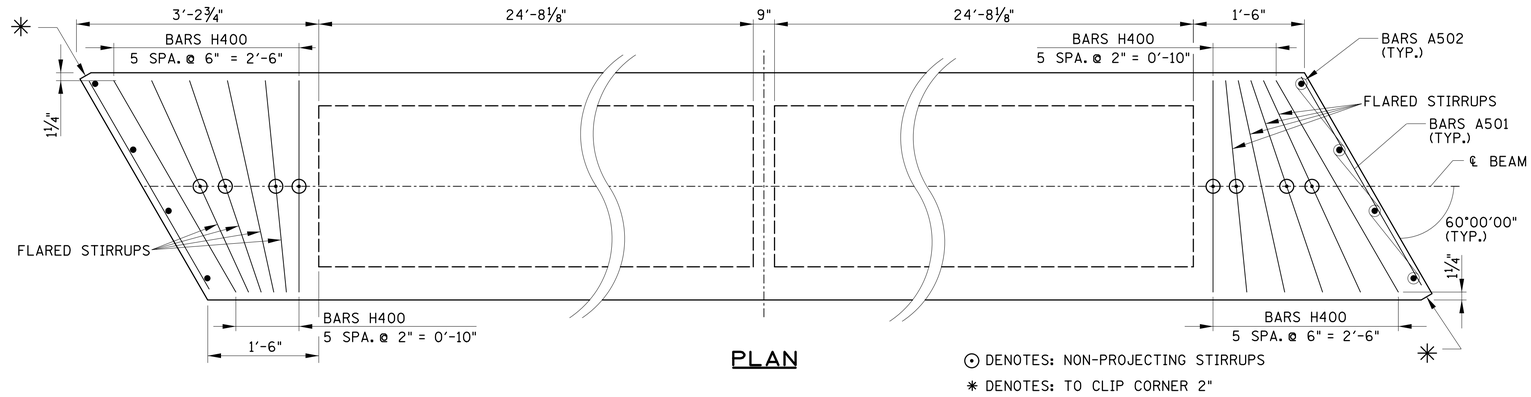

PLAN

⊙ DENOTES: NON-PROJECTING STIRRUPS

✳ DENOTES: TO CLIP CORNER 2"

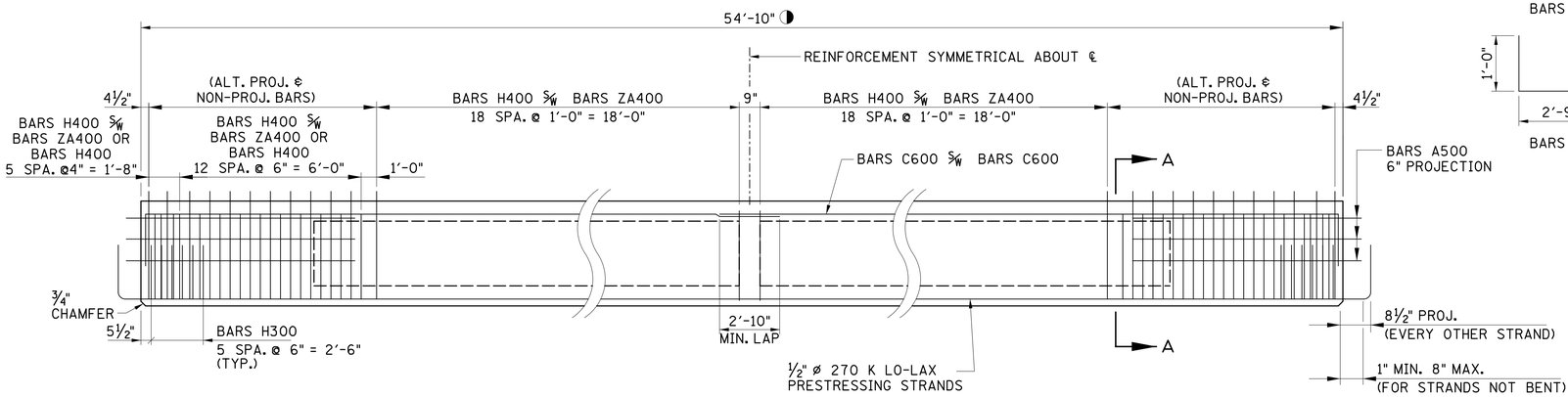

ELEVATION

(SHOWING STIRRUP BAR SPACING ALONG ℄ OF BEAM)

◑ NOTE: CONTRACTOR TO VERIFY BEAM LENGTHS PRIOR TO SHOP DRAWING SUBMISSION. DESIGN IS ADEQUATE FOR BEAMS UP TO 1'-0" LONGER OR SHORTER THAN LENGTHS SHOWN ON THIS DRAWING. EQUALLY ADJUST SPACING OF CENTER GROUPING OF STIRRUPS AS NEEDED.

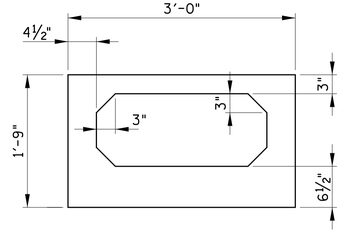

SECTION A-A SHOWING PROPERTIES

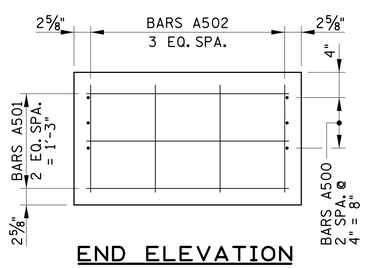

END ELEVATION

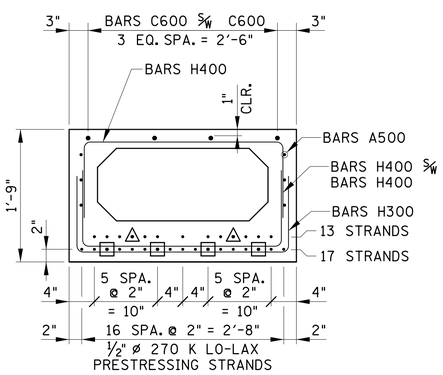

SECTION A-A SHOWING REINFORCEMENT

(NON-PROJECTING STIRRUPS)

△ DENOTES: DEBOND 4'-0" FROM EACH END

⊡ DENOTES: DEBOND 6'-0" FROM EACH END

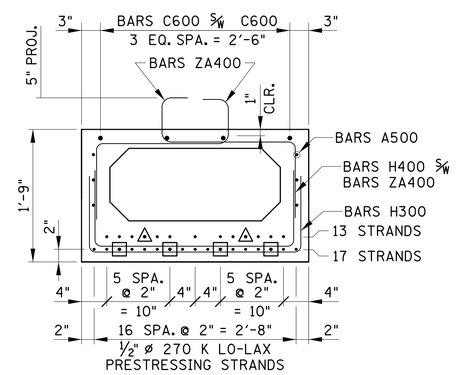

SECTION A-A SHOWING REINFORCEMENT

(PROJECTING STIRRUPS)

△ DENOTES: DEBOND 4'-0" FROM EACH END

⊡ DENOTES: DEBOND 6'-0" FROM EACH END

BILL OF STEEL- PER BEAM

BAR	NO. REQ'D.	LENGTH
A500	12	5'-0"
A501	6	2'-8"
A502	8	1'-10"
C600	8	29'-4"
H300	12	4'-9½"
H400	76	4'-0"
ZA400	72	3'-10"

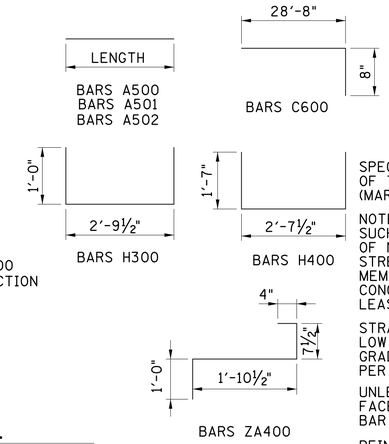

CONST. NO.		
PROJECT NO.	YEAR	SHEET NO.
85008-4206-04	2015	

REVISIONS

NO.	DATE	BY	BRIEF DESCRIPTION

GENERAL NOTES

SPECIFICATIONS: STANDARD ROAD AND BRIDGE SPECIFICATIONS OF THE TENNESSEE DEPARTMENT OF TRANSPORTATION (MARCH 1, 2006 EDITION)

NOTE: THE CONCRETE FOR THIS CONSTRUCTION SHALL BE OF SUCH PROPERTIES AS TO ATTAIN A COMPRESSIVE STRENGTH OF NOT LESS THAN 9,000 psi AT THE AGE OF 28 DAYS AND STRESS TRANSFER SHALL NOT BE MADE TO THE BRIDGE MEMBER UNTIL THE TEST SPECIMENS INDICATE THAT THE CONCRETE HAS REACHED A COMPRESSIVE STRENGTH OF AT LEAST 7,500 psi.

STRANDS: 7 WIRE, UNCOATED, STRESS RELIEVED LOW RELAXATION PRESTRESSING STRAND. ½" DIA. ASTM GRADE 270K, THE INITIAL TENSION APPLIED SHALL BE 31,003 lbs. PER STRAND. As= 0.1531 in²

UNLESS OTHERWISE NOTED, MINIMUM CLEAR DISTANCE FROM THE FACE OF CONCRETE TO ANY REINFORCING BAR IS (1) ONE INCH. BAR SPACING DIMENSIONS ARE CENTER TO CENTER.

REINFORCING STEEL: TO BE ASTM A615 GRADE 60. MINIMUM LAP SPLICE FOR #6 BARS IS 2'-9".

IF BEAMS ARE NOT INSTALLED DIRECTLY FROM DELIVERY TRUCKS, THEY SHALL BE STORED AND HANDLED IN SUCH MANNER AS TO AVOID EXCESSIVE BENDING STRESSES, CRACKING, SPALLING, OR OTHER INJURY. THE BEAMS SHALL BE MAINTAINED IN AN UPRIGHT POSITION, AND KEPT CLEAN OF MUD AND DIRT.

THE TOP OF ALL BEAMS TO BE ROUGH FLOATED, AT APPROXIMATELY THE TIME OF INITIAL SET, THE TOP OF THE BEAM WILL ALSO BE SCRUBBED TRANSVERSELY WITH A COARSE WIRE BRUSH TO REMOVE ALL LAITANCE AND PRODUCE A ROUGH SURFACE. WHERE PRECAST DECK PANELS ARE TO BE USED AND SET ON PADS. THE OUTER (2) TWO INCHES OF THE TOP FLANGE MAY BE TROWELED.

SEE STD. DWG. STD-14-3 FOR ADDITIONAL DETAILS.

PRESTRESSED BEAM DESIGN DATA (PER BEAM):

LLDFm = 0.890 LANES / BEAM

LLDFv = 1.048 LANES / BEAM

COMPOSITE DEAD LOAD: 502.5 LB/FT

COMPOSITE SLAB DESIGN STRENGTH: f'c = 3000 psi

ESTIMATED QUANTITIES PER BEAM

NO. BEAMS REQ'D.	CLASS "A" CONCRETE C.Y.	REINFORCING STEEL LB.	PRESTRESSING STRANDS (LOW RELAXATION) LB.
4	7.0	856	887

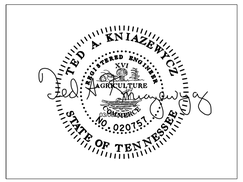

STATE OF TENNESSEE
DEPARTMENT OF TRANSPORTATION

BOX BEAM DETAILS 21"×36" (SPAN 2) STATE ROUTE 260 OVER LITTLE GOOSE CREEK BR. NO. 85-SR260-05.58 TROUSDALE COUNTY 2015

BR-118- 51

PIN NO. 120027.00

DESIGNED BY	GRESHAM SMITH & PARTNERS	DATE	7/2014
DRAWN BY	R. PALMER	DATE	7/2014
SUPERVISED BY	T. KNIAZEWYCZ	DATE	7/2014
CHECKED BY		DATE	

GRESHAM SMITH AND PARTNERS

gyoun
P:\2807119\b\807lb19g2.sht
3/4/2015
PRF