CONST. NO.

PROJECT NO.	YEAR	SHEET NO.
85008-4206-04	2015	

REVISIONS

NO.	DATE	BY	BRIEF DESCRIPTION
1	8-25-15	TAK	REV. DETAILS

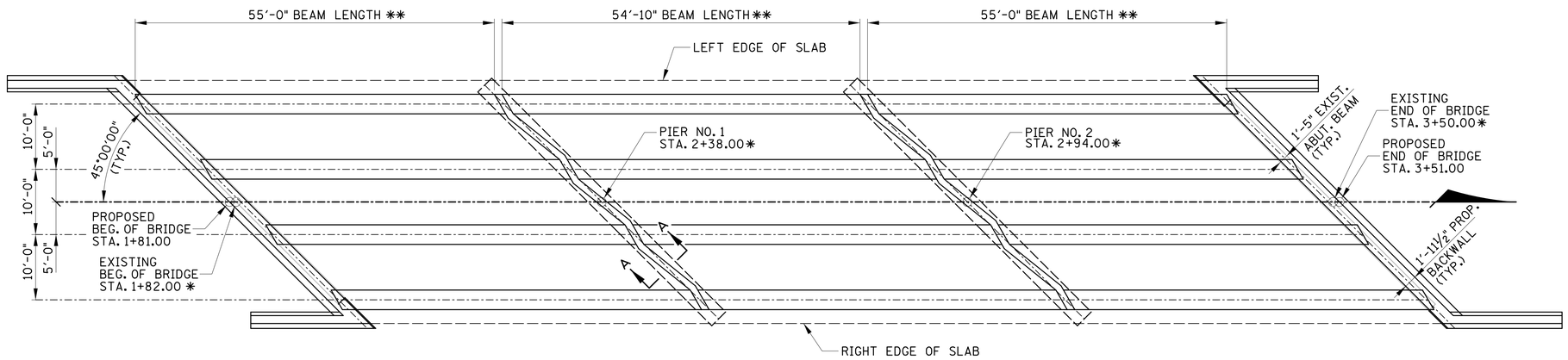

FRAMING PLAN

* NOTE: STATIONING BASED ON EXISTING PLANS

** DENOTES: THEORETICAL BEAM LENGTH BASED ON EXISTING PLANS CONTRACTOR SHALL VERIFY SPAN AND BEAM LENGTH PRIOR TO SHOP DRAWING SUBMISSION.

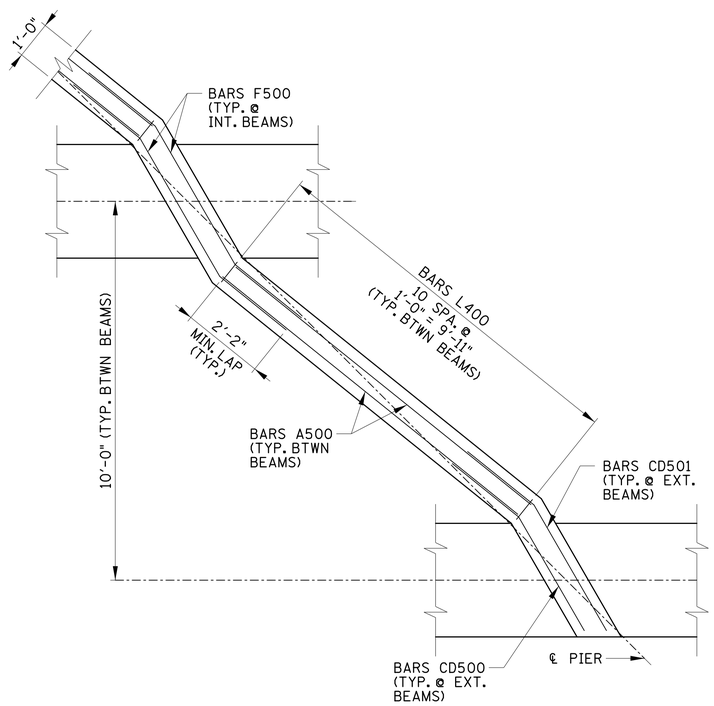

PLAN OF DIAPHRAGM

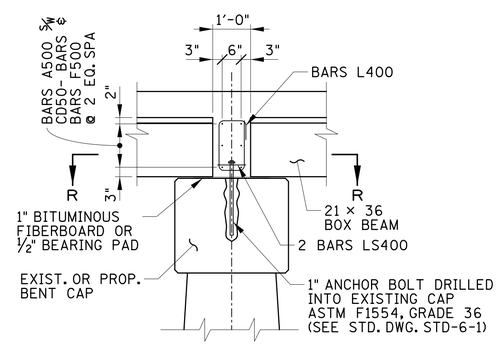

SECTION A-A

SPECIAL NOTE: FOR ANCHOR BOLTS AT BENT EXCEPT AS OTHERWISE NOTED, ANCHOR BOLTS ASSEMBLIES AT BENT SHALL BE IN ACCORDANCE WITH STANDARD DRAWING STD-6-1 WITH HOOK OMITTED. (24 REQUIRED)

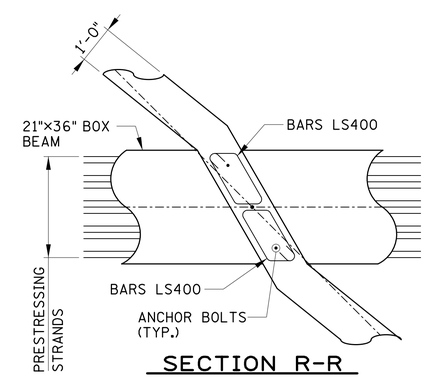

SECTION R-R

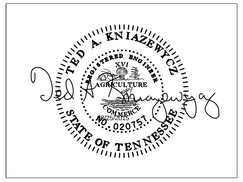

STATE OF TENNESSEE
DEPARTMENT OF TRANSPORTATION

SUPERSTRUCTURE DETAILS
FRAMING PLAN
STATE ROUTE 260
OVER
LITTLE GOOSE CREEK
BR. NO. 85-SR260-05.58
TROUSDALE COUNTY
2015

PIN NO. 120027.00

DESIGNED BY	GRESHAM SMITH & PARTNERS	DATE	7/2014
DRAWN BY	R. PALMER	DATE	7/2014
SUPERVISED BY	T. KNIAZEWYCZ	DATE	7/2014
CHECKED BY		DATE	

GRESHAM SMITH AND PARTNERS

gyoun
P:\2807119\b\807lb19s3.sht
8/25/2015
PRF