CONST. NO.		
PROJECT NO.	YEAR	SHEET NO.
85008-4206-04	2015	

REVISIONS

NO.	DATE	BY	BRIEF DESCRIPTION
1	8-25-15	TAK	REV. DETAILS

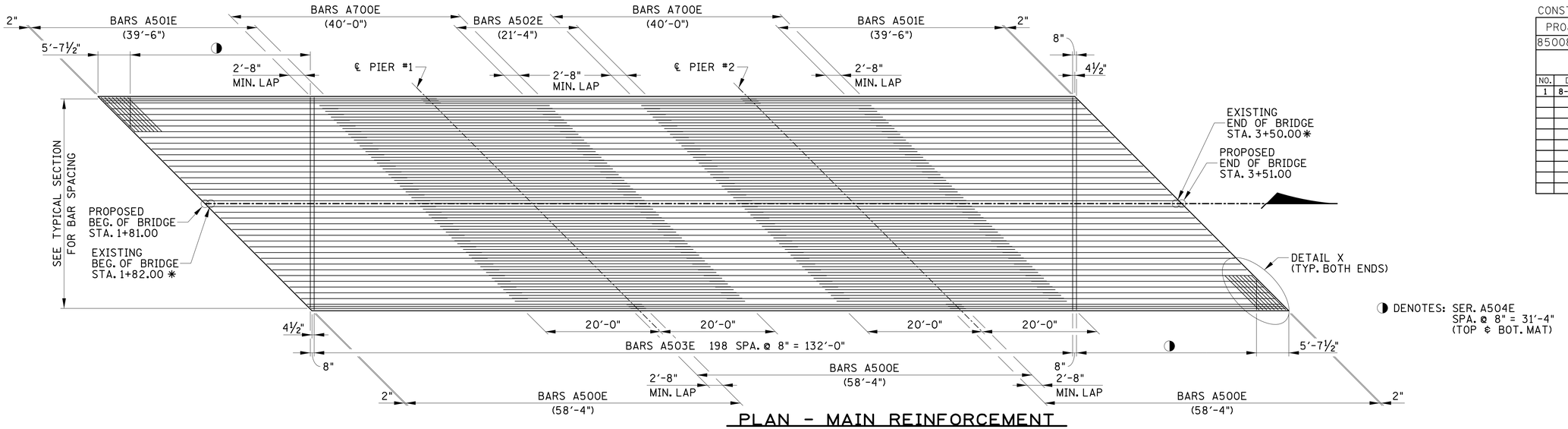

◑ DENOTES: SER. A504E
SPA. @ 8" = 31'-4"
(TOP & BOT. MAT)

PLAN - MAIN REINFORCEMENT

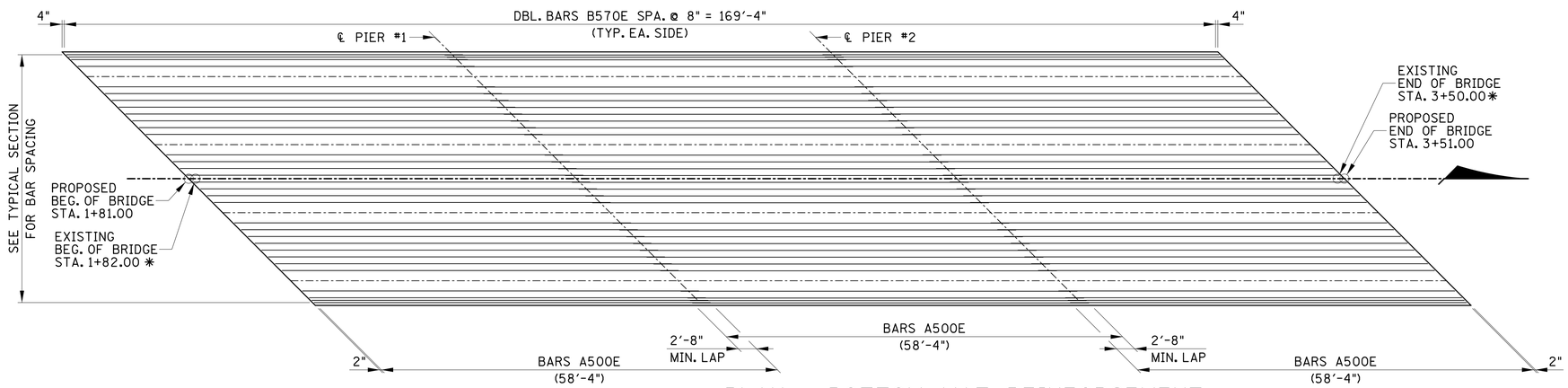

PLAN - BOTTOM MAT REINFORCEMENT

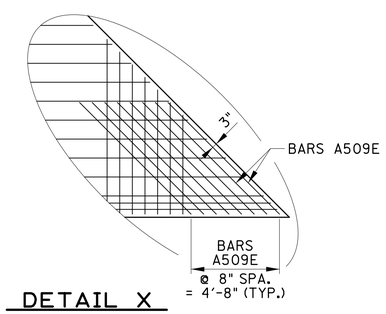

DETAIL X

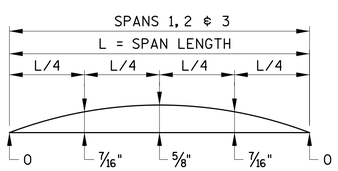

DEAD LOAD CORRECTION CURVE

DEAD LOAD CORRECTION CURVE: THIS CURVE IS FOR DEAD LOAD SLAB AND ALL DEAD LOADS THAT ARE APPLIED AFTER SLAB IS IN PLACE AND SHOULD BE CORRECTED TO COMPENSATE FOR THE EFFECTS DUE TO VERTICAL CURVE.

NOTE: IF PRESTRESSED DECK PANELS ARE USED AND THE BEAMS ARE PROFILED AFTER PANELS ARE IN PLACE, REDUCE THE DEAD LOAD CORRECTION VALUES SHOWN BY 25%.

ALL SLAB CONSTRUCTION JOINTS SHALL BE IN ACCORDANCE WITH THE SLAB CONSTRUCTION JOINT DETAIL SHOWN BELOW.

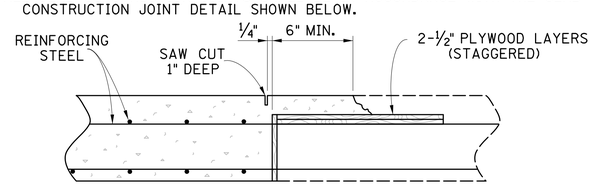

SLAB CONSTRUCTION JOINT DETAIL

(N.T.S.)

DECK CONCRETE POURING SEQUENCE: SLAB CONSTRUCTION JOINTS MAY BE LOCATED AT THE CONTRACTOR'S OPTION SUBJECT TO THE FOLLOWING:

1) NO CONSTRUCTION JOINT MAY BE LOCATED CLOSER THAN 10 FEET OR FURTHER THAN 15 FEET FROM AN INTERIOR SUPPORT.

2) THE SLAB IN THE MIDDLE SECTION OF BOTH ADJACENT SPANS MUST BE POURED TO WITHIN AT LEAST 15 FEET OF THE SUPPORTS EITHER PRIOR TO OR CONCURRENTLY WITH THE SLAB OVER AN INTERIOR SUPPORT.

PIN NO. 120027.00

DESIGNED BY	GRESHAM SMITH & PARTNERS	DATE	7/2014
DRAWN BY	R. PALMER	DATE	7/2014
SUPERVISED BY	T. KNIAZEWYCZ	DATE	7/2014
CHECKED BY		DATE	

GRESHAM SMITH AND PARTNERS

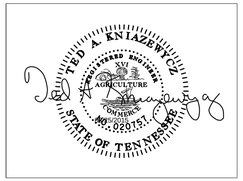

STATE OF TENNESSEE
DEPARTMENT OF TRANSPORTATION

1 SUPERSTRUCTURE DETAILS
SLAB PLAN
STATE ROUTE 260
OVER
LITTLE GOOSE CREEK
BR. NO. 85-SR260-05.58
TROUSDALE COUNTY
2015

BR-118- 48

gyoun
P:\2807119\b\8071b19s2.sht
8/25/2015
PRF