TYPE	YEAR	PROJECT NO.	SHEET NO.
CONST.	2015	43009-4407-04	2E

TENNESSEE D.O.T.
DESIGN DIVISION
FILE NO.

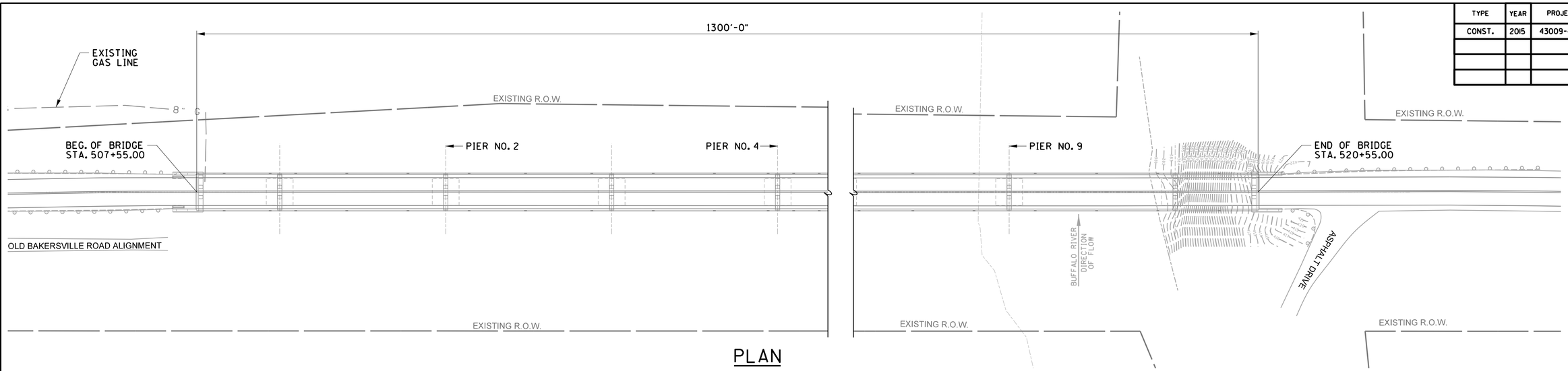

PLAN

NOTE: WORK ZONE UNDER BRIDGE AT ABUTMENT NO. 2.

ITEM NO. 712-06 SIGNS

DESIGNATION	LEGEND	SIZE	NO. REQ'D.	SQ. FT.
G20-2	END ROAD WORK	36" x 18"	2	9
W20-1	ROAD WORK 1 MILE	48" x 48"	2	32
W20-1	ROAD WORK ½ MILE	48" x 48"	2	32
W20-1	ROAD WORK 1500 FT	48" x 48"	2	32
W20-1	ROAD WORK AHEAD	48" x 48"	2	32
			TOTAL	137

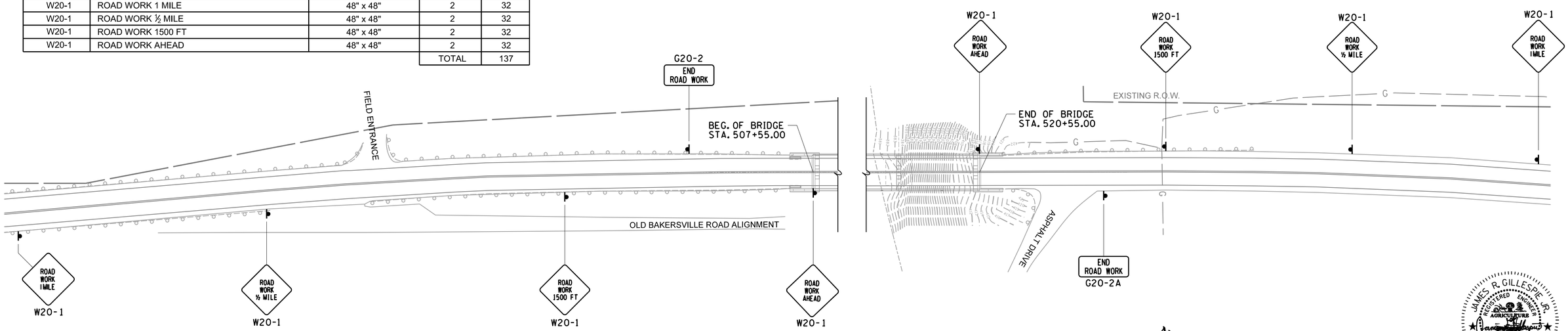

ADVANCE WARNING SIGNAGE DETAIL

NOTE: CONTRACTOR SHALL REFER TO STD. DWG. T-WZ-10 FOR ADVANCE WARNING SIGNAGE.

NOTE: ADDITIONAL SIGNAGE AND FLAGGERS MAY BE REQUIRED IN THE EVENT TEMPORARY LANE CLOSURES ARE REQUIRED IN ASSOCIATION WITH BRIDGE DECK JACKING. SEE STD. DWG. T-WZ-36 FOR ADDITIONAL DETAIL.

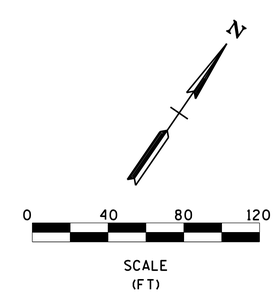

JAMES R. GILLESPIE JR.
REGISTERED ENGINEER
AGRICULTURE
COMMERCE
No. 102930
STATE OF TENNESSEE
06/10/2015

STATE OF TENNESSEE
DEPARTMENT OF TRANSPORTATION

BRIDGE NO. 43-910-4.10
BAKERSVILLE ROAD
OVER BUFFALO RIVER
HUMPHREYS COUNTY
2015

ROADWAY DETAILS