CONST. NO. _____

PROJECT NO.	YEAR	SHEET NO.
43009-4407-04	2015	

REVISIONS

NO.	DATE	BY	BRIEF DESCRIPTION

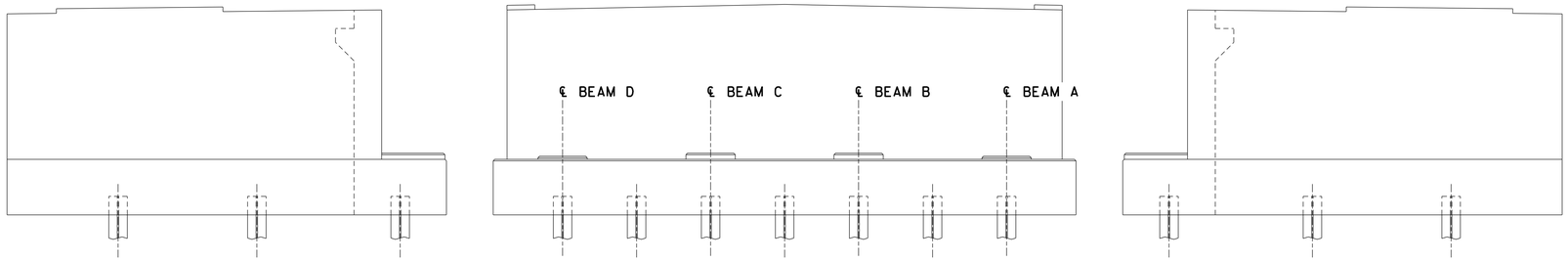

ABUTMENT NO. 1
(LOOKING BACK ON SURVEY)

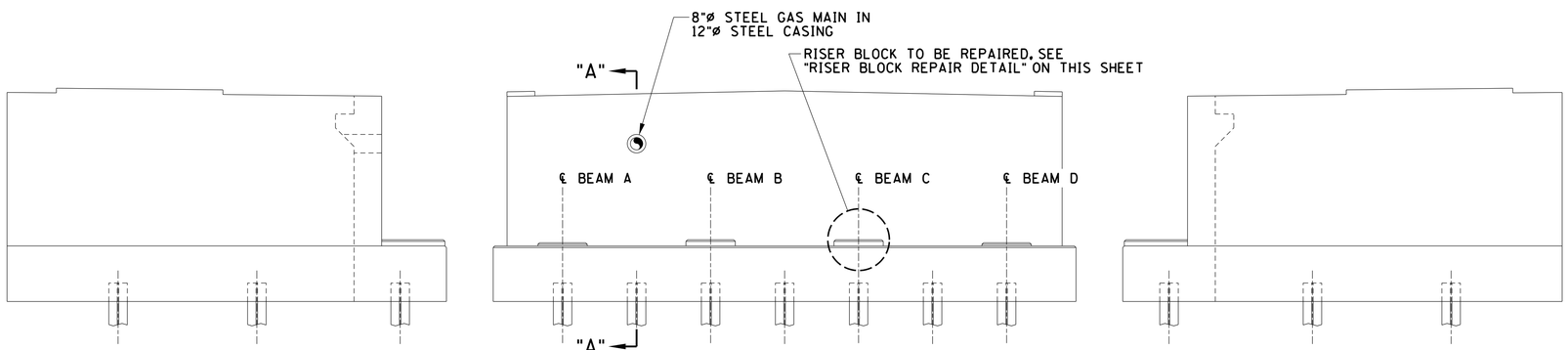

ABUTMENT NO. 2
(LOOKING FORWARD ON SURVEY)

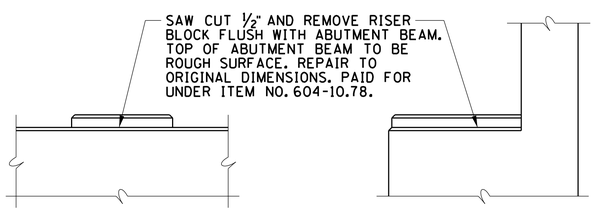

RISER BLOCK REPAIR DETAIL
(NOT TO SCALE)

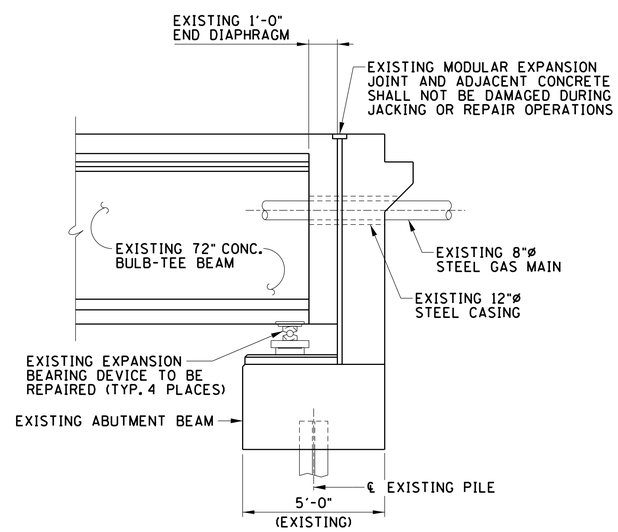

SECTION "A-A"
(AT ABUTMENT NO. 2)
(NOT TO SCALE)

EXPANSION BEARING DEVICE REPAIR:

1. CONTRACTOR SHALL REPAIR ALL EXPANSION BEARING DEVICES AT ABUTMENT NO. 2 (4 TOTAL DEVICES). ALL COSTS TO BE INCLUDED IN ITEM NO. 602-10.12, BEARING DEVICE (REPAIRS), L.S. REPAIR SHALL CONSISTS OF THE FOLLOWING:

   I. EACH BEARING DEVICE SHALL BE REMOVED, INSPECTED WITH TDOT ENGINEER FOR DAMAGE, CLEANED, LUBRICATED, REASSEMBLED AND MADE OPERABLE. ANY DAMAGED COMPONENTS IN BEARING DEVICE SHALL BE REPLACED WITH NEW, APPROVED COMPONENTS.

   II. REMOVAL OF ANY BENT ANCHOR BOLTS AND THE DRILLING AND GROUTING OF NEW 1¼"ø × 3'-10" ASTM A307 ANCHOR BOLTS TO REPLACE THE BENT ANCHOR BOLTS REMOVED. ANCHOR BOLT PROJECTION = 10 INCHES.

   III. BEARING PLATE CAST IN END OF CONCRETE BEAM SHALL BE WELDED TO THE 1" THICK TOP PLATE OF THE BEARING DEVICE WITH A 5/16" FILLET WELD AS INDICATED ON M-485-7 DATED 2007. BEAM END REPAIRS NOTED ON BR-119-63 SHALL BE COMPLETE AND JACKS REMOVED AND LOAD TRANSFERRED BACK TO THE BEARING DEVICES PRIOR TO WELDING BEAM BEARING PLATE TO THE BEARING DEVICE.

2. THE NEW POSITION OF EACH EXPANSION BEARING DEVICE IS TO BE DETERMINED AT THE TIME OF REPAIR.
3. WELDING SHALL BE PERFORMED BY AN AWS CERTIFIED WELDER - SEE STANDARD SPECIFICATION SECTION 602.
4. ALL BEARING REPAIR PROCEDURES SHALL BE SUBMITTED TO THE TDOT BRIDGE REPAIR OFFICE PRIOR TO STARTING WORK.
5. FOR ADDITIONAL INFORMATION ON EXISTING BEARING DEVICES AND ANCHOR BOLTS, SEE DRAWING M-485-7, DATED 2007.
6. SEE "NOTES CONCERNING JACKING OPERATIONS (BR. NO. 43-910-4.10)" ON SHEET BR-119-62.

DAVID W. THOMPSON
REGISTERED ENGINEER
AGRICULTURE
COMMERCE
NO. 19232
STATE OF TENNESSEE
6/10/2015
STATE OF TENNESSEE
DEPARTMENT OF TRANSPORTATION

ABUTMENT REPAIRS

BRIDGE NO. 43-910-4.10
BAKERSVILLE ROAD OVER BUFFALO RIVER
HUMPHREYS COUNTY
2015

DESIGNED BY D. THOMPSON/D. KEATON DATE _____
DRAWN BY ANGELA MOORE DATE _____
SUPERVISED BY DARRELL JAMES DATE _____
CHECKED BY JAMIE GILLESPIE DATE _____

JACOBS ASSOCIATES INC