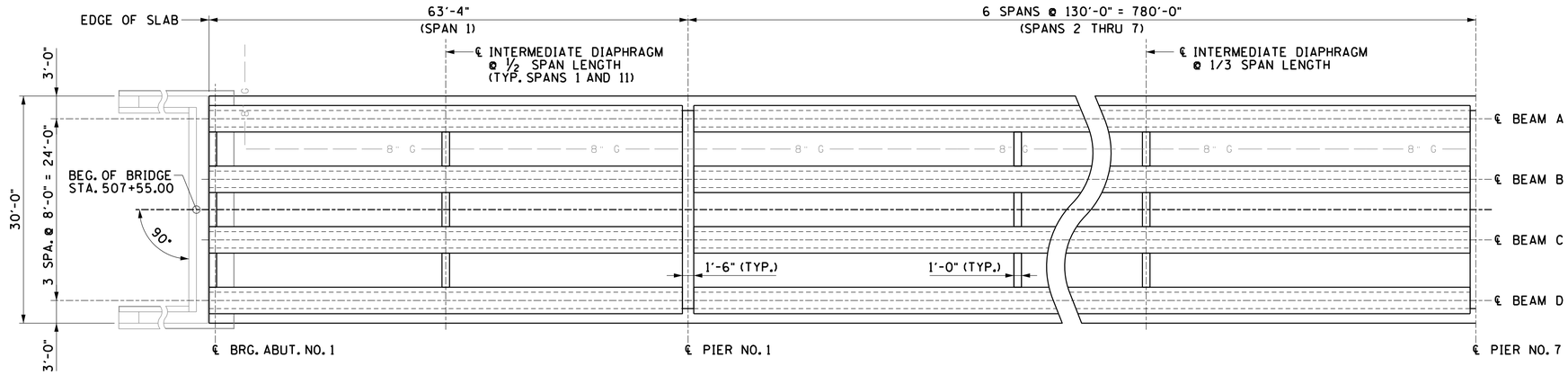

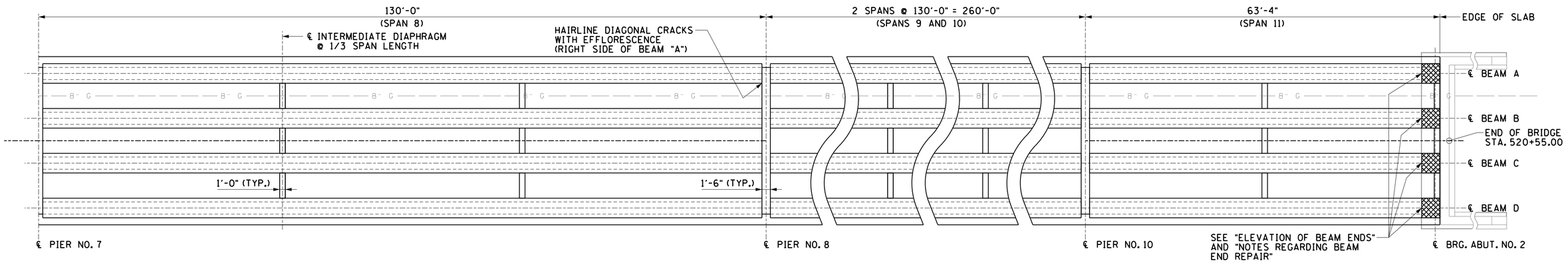

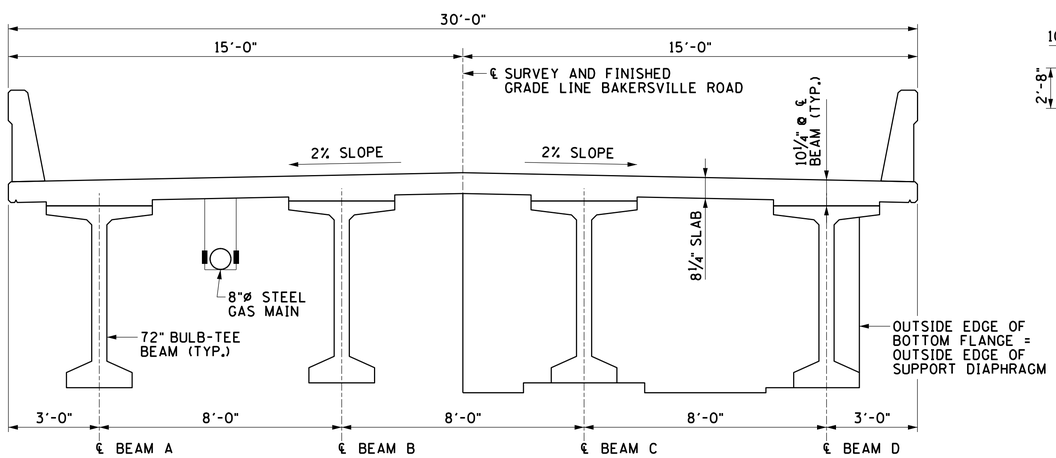

TYPICAL CROSS SECTION

(LOOKING FORWARD ON SURVEY)

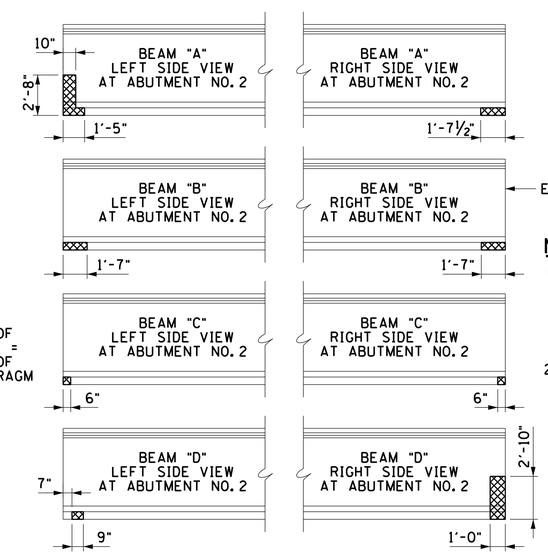

ELEVATION OF BEAM ENDS

(AT SPAN NO. 11 OVER ABUTMENT NO. 2)

DENOTES: DEFICIENT CONCRETE. SEE BR-119-68 "CONCRETE REPAIR DETAILS" FOR ESTIMATED REPAIR QUANTITIES. ALL REPAIR AREAS SHALL BE DESIGNATED BY THE BRIDGE REPAIR OFFICE OR THE TDOT ENGINEER AND SHALL BE INCLUDED IN ITEM NO. 604-10.05 OR ITEM NO. 604-10.54. DIMENSIONS PROVIDED ON THESE PLANS ARE FOR ESTIMATING PURPOSES ONLY.

NOTES REGARDING BEAM END REPAIR

1. BEAMS WITH EXPOSED SHEAR STUDS: AN ADEQUATE AMOUNT OF BEAM AND DIAPHRAGM CONCRETE SHALL BE REMOVED FROM AREA AROUND THE SHEAR STUDS IN ORDER TO PROPERLY EMBED THE STUDS WHEN THE NEW CONCRETE IS PLACED. COST SHALL BE INCLUDED IN ITEM NO. 604-10.05.
2. FOR BEAMS THAT HAVE EXPERIENCED A SHIFT OF THE BEARING PLATE, ADEQUATE CONCRETE SHALL BE REMOVED FROM THE BEAM AND DIAPHRAGM IN ORDER TO MOVE THE BEARING PLATE TO ITS ORIGINAL POSITION PRIOR TO PLACING NEW CONCRETE. BEARING PLATE SHEAR STUDS SHALL BE PROPERLY EMBEDDED IN NEW CONCRETE. COST SHALL BE INCLUDED IN ITEM NO. 604-10.05.

CONST. NO.

PROJECT NO.	YEAR	SHEET NO.
43009-4407-04	2015	

REVISIONS

NO.	DATE	BY	BRIEF DESCRIPTION

DAVID W. THOMPSON
REGISTERED ENGINEER
AGRICULTURE
COMMERCE
NO. 19232
STATE OF TENNESSEE

6/10/2015

STATE OF TENNESSEE
DEPARTMENT OF TRANSPORTATION

SUPERSTRUCTURE

BRIDGE NO. 43-910-4.10
BAKERSVILLE ROAD OVER BUFFALO RIVER
HUMPHREYS COUNTY
2015

DESIGNED BY D. THOMPSON/D. KEATON DATE
DRAWN BY ANGELA MOORE DATE
SUPERVISED BY DARRELL JAMES DATE
CHECKED BY JAMIE GILLESPIE DATE

JACOBS ASSOCIATES INC.

BR-119-63