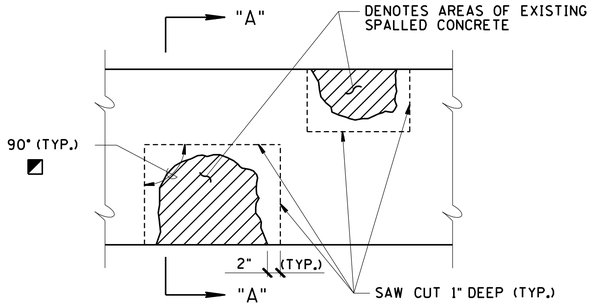

DETAIL SHOWING AREAS OF EXISTING SPALLED CONCRETE SURFACES TO BE REMOVED AND REPAIRED

◒ DENOTES: LIMITS AND LOCATION OF REPAIRS DESIGNATED ON THE CONCRETE REPAIR SHEETS AND SUPERSTRUCTURE SHEET.

◪ DENOTES: SAW CUT EXISTING CONCRETE SURFACES SO AS TO OBTAIN SQUARED CORNERS.

NOTE: THE COST OF REMOVING PORTIONS OF THE EXISTING CONCRETE WITHIN THE LIMITS SHOWN, SAW CUTTING, COMPLETELY CLEANING EXISTING REINFORCING STEEL, CONCRETE, FORMING, LABOR AND ALL MISCELLANEOUS MATERIAL, INCLUDING REINFORCING STEEL, NECESSARY TO COMPLETE THE REPAIRS AS SHOWN SHALL BE INCLUDED IN PRICE BID FOR ITEM NO. 604-10.54, CONCRETE REPAIRS, S.F.

1. THE ENGINEER SHALL DESIGNATE ALL CONCRETE REPAIR AREAS IN THE FIELD. QUANTITIES GIVEN ARE APPROXIMATE. ITEM NO. 604-10.05 AND ITEM NO. 604-10.54 MAY BE INCREASED, DECREASED, OR ELIMINATED BY THE ENGINEER.
2. THE CONTRACTOR SHALL BE RESPONSIBLE FOR THE STABILITY OF THE STRUCTURE DURING CONSTRUCTION. DESIGN CALCULATION AND DETAILS OF TEMPORARY SUPPORT SYSTEM OR FALSEWORK REQUIRED SHALL BE SUBMITTED TO THE ENGINEER FOR REVIEW AND SHALL MEET WITH THE FULL SATISFACTION OF THE ENGINEER BEFORE ANY DEMOLITION IS BEGUN. COST OF STABILIZING THE STRUCTURE SHALL BE INCLUDED IN ITEM NO. 602-10.05, BRACING REPAIRS, L.S..
3. THE ENGINEER SHALL HAVE THE OPTION OF DESIGNATING A SPALL AREA TO BE REPAIRED UNDER ITEM NO. 604-10.05 OR ITEM NO. 604-10.54. PATCHING MATERIAL FOR ITEM NO. 604-10.05 SHALL BE 3,000 PSI CONCRETE. PATCHING MATERIAL FOR ITEM NO. 604-10.54 SHALL BE A POLYMER MODIFIED CEMENTITIOUS STRUCTURAL PATCHING MATERIAL. SEE QUALIFIED PRODUCTS LIST 13, SECTION B.6.
4. EXTREME CARE SHALL BE TAKEN WHEN REMOVING THE EXISTING SPALLED CONCRETE SO AS NOT TO DAMAGE THE EXISTING REINFORCING STEEL. ALL EXPOSED REINFORCING STEEL SHALL RECEIVE A COMPLETE CLEANING TO REMOVE ALL RUST. ALL EXISTING REINFORCEMENT SHALL REMAIN IN PLACE. ALL WORK MUST MEET WITH THE FULL APPROVAL OF THE ENGINEER.
5. POWER DRIVEN HAND TOOLS USED FOR REMOVAL OF UNSOUND CONCRETE ARE SUBJECT TO THE FOLLOWING RESTRICTIONS:
   A. PNEUMATIC HAMMERS HEAVIER THAN 35 LB. CLASS SHALL NOT BE USED.
   B. CHIPPING HAMMERS OF THE 15 LB. CLASS SHALL BE USED TO REMOVE CONCRETE FROM BEHIND REINFORCING STEEL AND BEAM END REPAIRS.

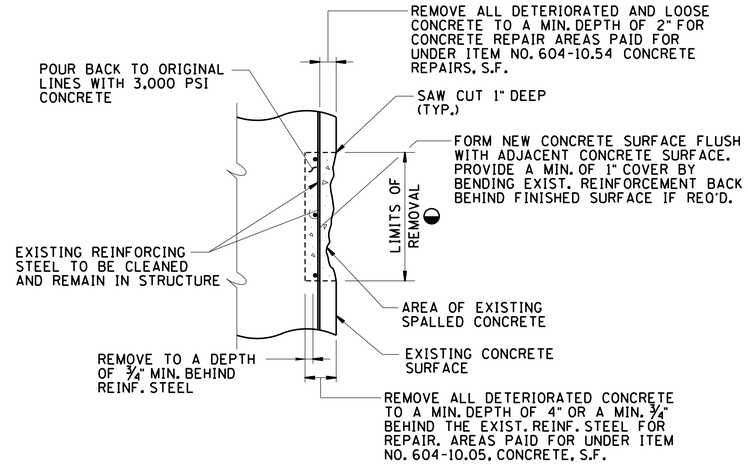

SECTION "A-A"

BRIDGE NO. 43-910-4.10	
ESTIMATED QUANTITIES	
ABUTMENT NO. 1	
ITEM NO. 604-10.05 CONCRETE S.F.	ITEM NO. 604-10.54 CONCRETE REPAIRS S.F.
0	0
PIER NO. 1	
ITEM NO. 604-10.05 CONCRETE S.F.	ITEM NO. 604-10.54 CONCRETE REPAIRS S.F.
0	0
PIER NO. 2	
ITEM NO. 604-10.05 CONCRETE S.F.	ITEM NO. 604-10.54 CONCRETE REPAIRS S.F.
0	0
PIER NO. 3	
ITEM NO. 604-10.05 CONCRETE S.F.	ITEM NO. 604-10.54 CONCRETE REPAIRS S.F.
0	0
PIER NO. 4	
ITEM NO. 604-10.05 CONCRETE S.F.	ITEM NO. 604-10.54 CONCRETE REPAIRS S.F.
0	0
PIER NO. 5	
ITEM NO. 604-10.05 CONCRETE S.F.	ITEM NO. 604-10.54 CONCRETE REPAIRS S.F.
0	5
PIER NO. 6	
ITEM NO. 604-10.05 CONCRETE S.F.	ITEM NO. 604-10.54 CONCRETE REPAIRS S.F.
0	0

BRIDGE NO. 43-910-4.10	
ESTIMATED QUANTITIES	
PIER NO. 7	
ITEM NO. 604-10.05 CONCRETE S.F.	ITEM NO. 604-10.54 CONCRETE REPAIRS S.F.
0	0
PIER NO. 8	
ITEM NO. 604-10.05 CONCRETE S.F.	ITEM NO. 604-10.54 CONCRETE REPAIRS S.F.
0	0
PIER NO. 9	
ITEM NO. 604-10.05 CONCRETE S.F.	ITEM NO. 604-10.54 CONCRETE REPAIRS S.F.
0	0
PIER NO. 10	
ITEM NO. 604-10.05 CONCRETE S.F.	ITEM NO. 604-10.54 CONCRETE REPAIRS S.F.
0	0
ABUTMENT NO. 2	
ITEM NO. 604-10.05 CONCRETE S.F.	ITEM NO. 604-10.54 CONCRETE REPAIRS S.F.
0	0
CONCRETE BEAM REPAIRS	
ITEM NO. 604-10.05 CONCRETE S.F.	ITEM NO. 604-10.54 CONCRETE REPAIRS S.F.
25	5
TOTAL FOR ITEM NO. 604-10.05 CONCRETE S.F.	TOTAL FOR ITEM NO. 604-10.54 CONCRETE REPAIRS S.F.
25	10

CONST. NO. _____

PROJECT NO.	YEAR	SHEET NO.
43009-4407-04	2015	

REVISIONS

NO.	DATE	BY	BRIEF DESCRIPTION

DAVID W. THOMPSON REGISTERED ENGINEER AGRICULTURE COMMERCE NO. 19235 STATE OF TENNESSEE

6/10/2015

STATE OF TENNESSEE
DEPARTMENT OF TRANSPORTATION

CONCRETE REPAIR DETAILS

BRIDGE NO. 43-910-4.10
BAKERSVILLE ROAD OVER BUFFALO RIVER
HUMPHREYS COUNTY
2015

BR-119-68

DESIGNED BY D. THOMPSON/D. KEATON DATE _____
DRAWN BY ANGELA MOORE DATE _____
SUPERVISED BY DARRELL JAMES DATE _____
CHECKED BY JAMIE GILLESPIE DATE _____

JAMES & ASSOCIATES, INC.