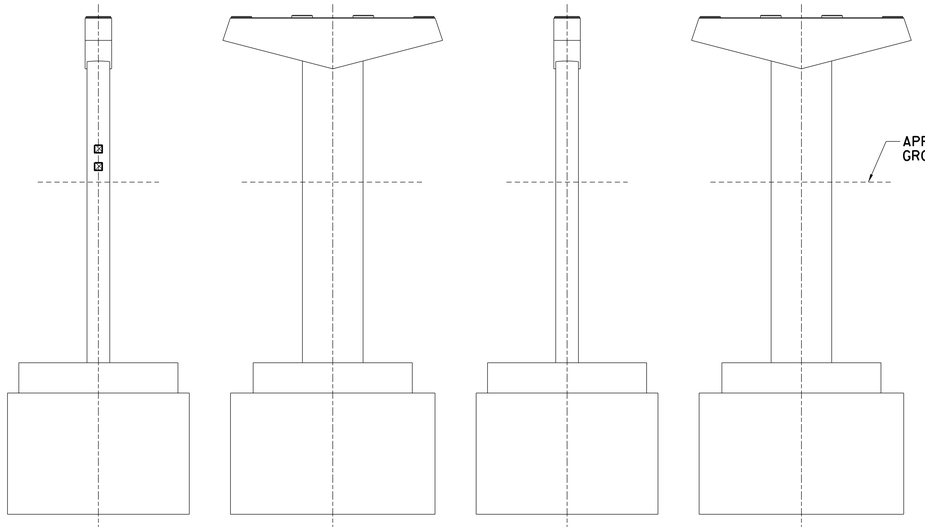

LOOKING NORTHWEST LOOKING NORTHEAST LOOKING SOUTHEAST LOOKING SOUTHWEST

PIER NO. 5

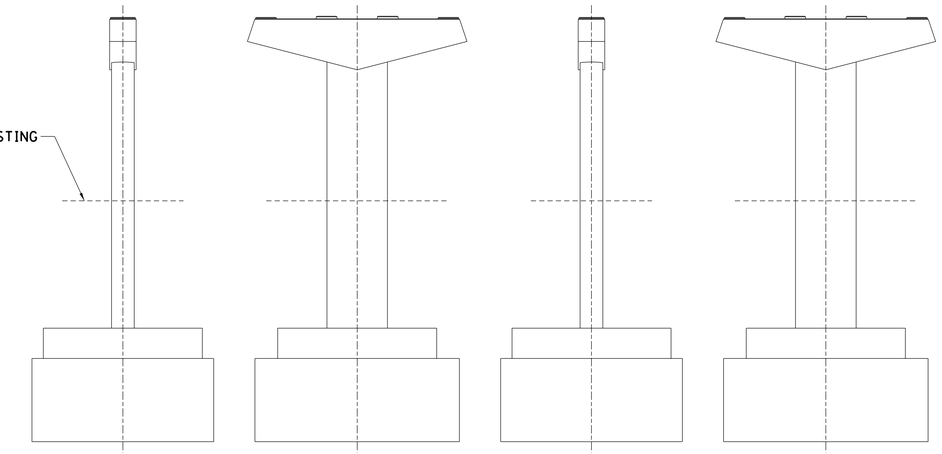

LOOKING NORTHWEST LOOKING NORTHEAST LOOKING SOUTHEAST LOOKING SOUTHWEST

PIER NO. 6

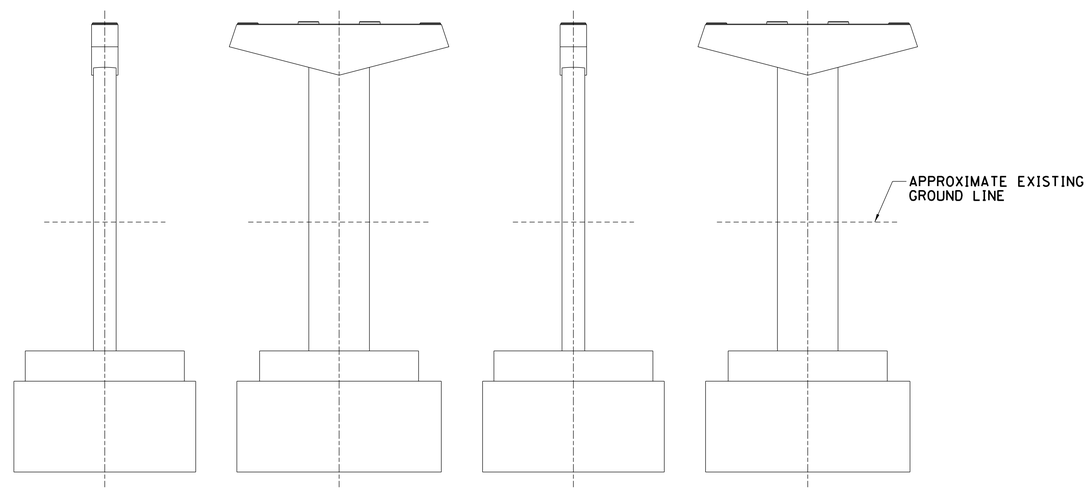

LOOKING NORTHWEST LOOKING NORTHEAST LOOKING SOUTHEAST LOOKING SOUTHWEST

PIER NO. 7

CONST. NO. _____

PROJECT NO.	YEAR	SHEET NO.
43009-4407-04	2015	

REVISIONS

NO.	DATE	BY	BRIEF DESCRIPTION

NOTE: INFORMATION AND DIMENSIONS FOR CONCRETE REPAIRS ARE PROVIDED FOR ESTIMATING ONLY. TDOT ENGINEER SHALL DELINEATE ACTUAL AREAS TO BE REPAIRED.

LEGEND

SPALLED SURFACES

WATER LEVEL

APPROXIMATE EXISTING GROUND LINE

NOTES:

(1) ALL AREAS THAT CONTAIN CALCIUM DEPOSITS SHALL BE REMOVED. ANY CONCRETE THAT HAS DETERIORATED BEHIND THE DEPOSITS SHALL BE REPAIRED.

(2) SEE BR-119-68 "CONCRETE REPAIR DETAILS" FOR ESTIMATED REPAIR QUANTITIES FOR ABUTMENTS. ALL REPAIR AREAS SHALL BE DESIGNATED BY THE BRIDGE REPAIR OFFICE AS STATED IN NOTE NO. 1 ON BR-119-68 AND SHALL BE INCLUDED IN ITEM NO. 604-10.05 OR ITEM NO. 604-10.54.

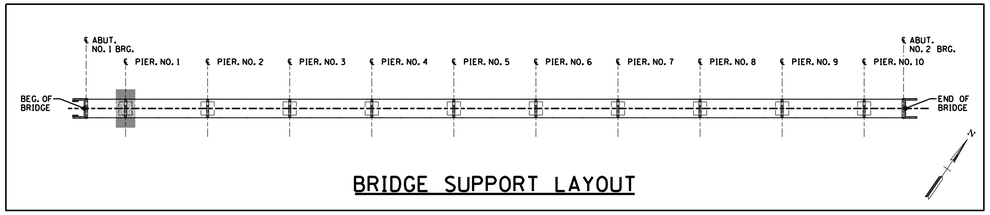

BRIDGE SUPPORT LAYOUT

DESIGNED BY D. THOMPSON/D. KEATON DATE _____
DRAWN BY ANGELA MOORE DATE _____
SUPERVISED BY DARRELL JAMES DATE _____
CHECKED BY JAMIE GILLESPIE DATE _____

JACOBS ASSOCIATES INC.

DAVID W. THOMPSON REGISTERED ENGINEER AGRICULTURE & COMMERCE NO. 19232 STATE OF TENNESSEE

6/10/2015

STATE OF TENNESSEE
DEPARTMENT OF TRANSPORTATION

CONCRETE REPAIRS
PIER NOS. 5 THRU 7

BRIDGE NO. 43-910-4.10
BAKERSVILLE ROAD OVER BUFFALO RIVER
HUMPHREYS COUNTY
2015

BR-119-66