Date of Last Revision 11-10-27

FED. ROAD DIST. NO.	STATE	FED. AID PROJ. NO.	FISCAL YEAR	SHEET NO.	TOTAL SHEETS
8	TENN.	234 A		25	105

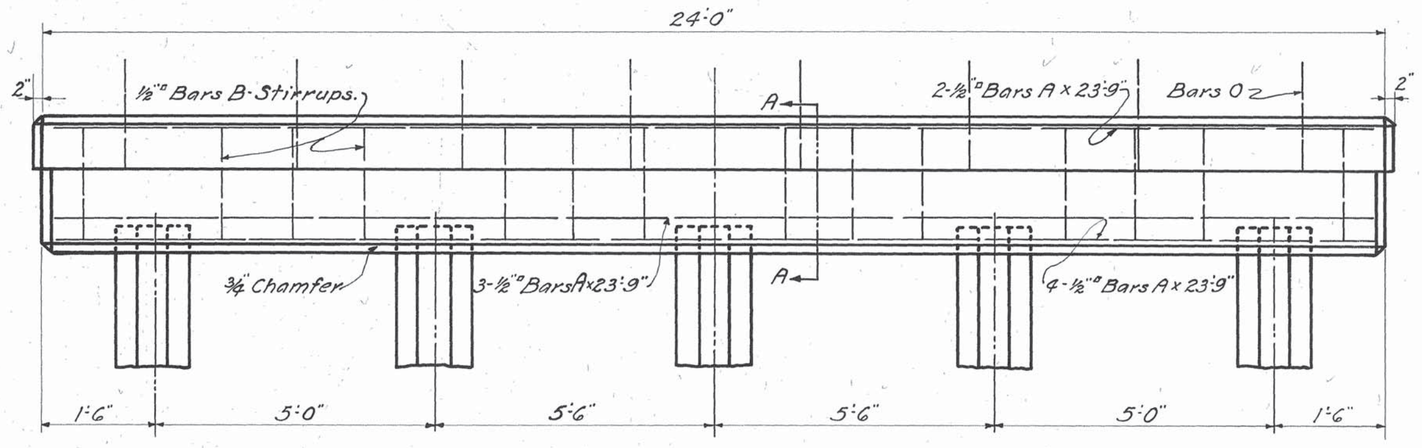

DETAIL OF BENT.
20'-0" ROADWAY.

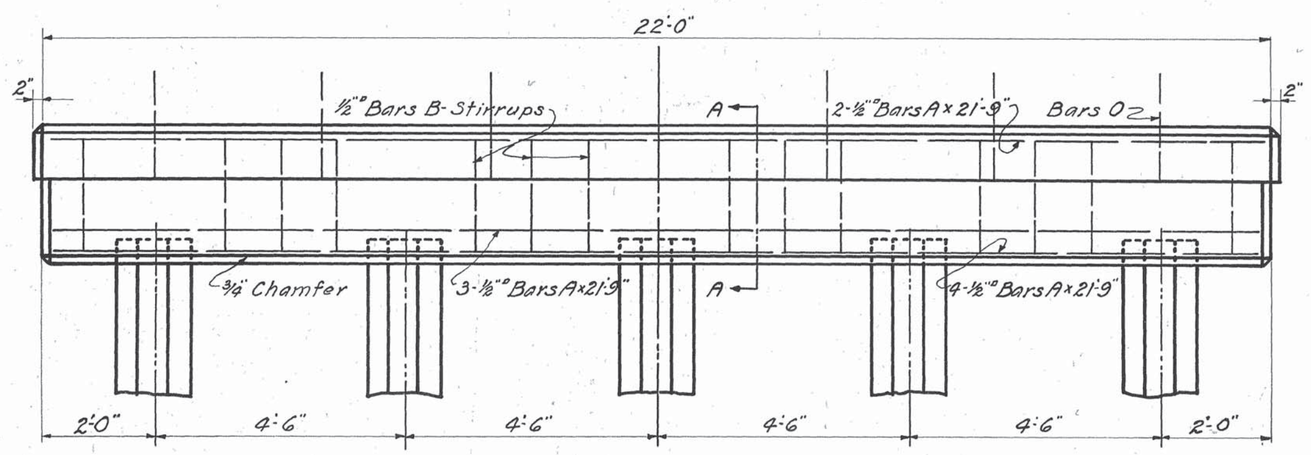

DETAIL OF BENT.
18'-0" ROADWAY.

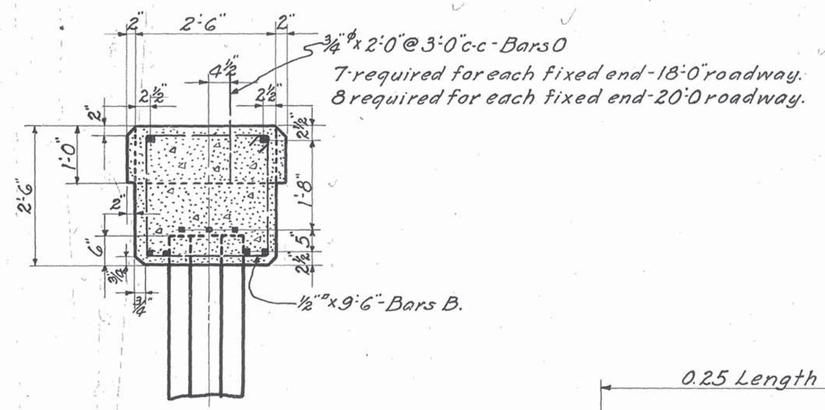

SECTION A-A.

TYPE "A".

Length of Pile.	Long. Reinforcement	Wgt. of Steel per ft	Wgt. of Pile per ft.
UP to 35'	4 - 3/4" ϕ	7.34 Lbs.	204 Lbs.
Over 35 to 40'	4 - 7/8" ϕ	9.52 Lbs.	207 Lbs.
Over 40 to 45'	4 - 1" ϕ	12.02 Lbs.	210 Lbs.
Over 45 to 50'	4 - 1" ϕ	14.94 Lbs.	213 Lbs.
Over 50 to 55'	8 - 1 1/8" ϕ	35.76 Lbs.	226 Lbs.
Over 55 to 60'	8 - 1 1/4" ϕ	43.84 Lbs.	231 Lbs.

GENERAL NOTES:

Specifications: Standard Road and Bridge Specifications of the Tennessee Department of Highways and Public Works.
Piling to be Class "S" concrete, with Class "A" aggregate.
Cap beam to be Class "A" concrete with Class "A" aggregate.
Reinforcing Steel: See Specifications.
Forms and Finish: See Specifications.
The distance from bottom of Cap to surface of ground shall not exceed 15'-0"

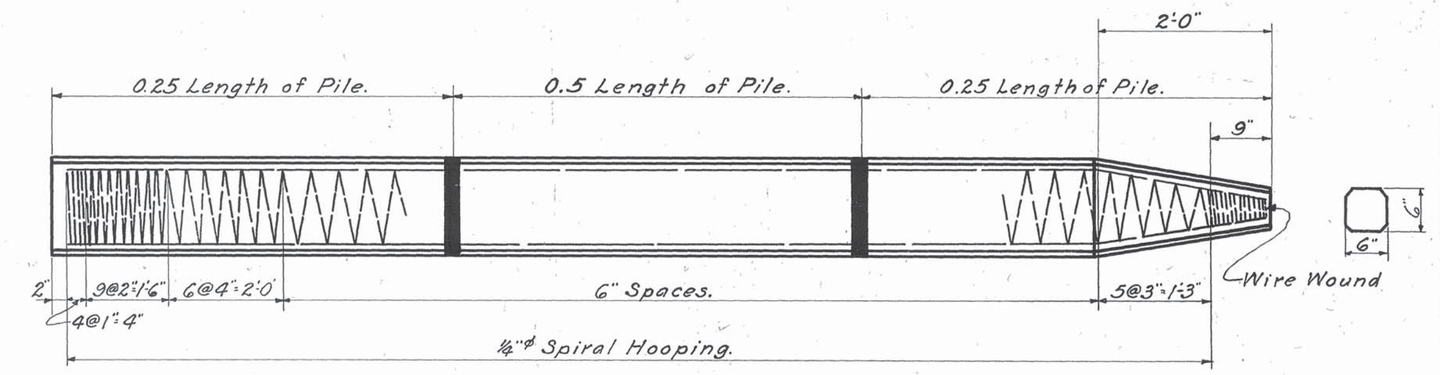

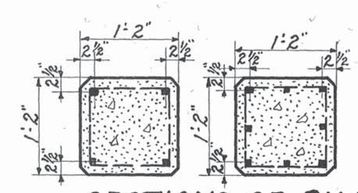

DETAIL OF PRECAST CONCRETE PILE.
TYPE "A"

SECTIONS OF PILES.
For length up to 50' For lengths 50' to 60'

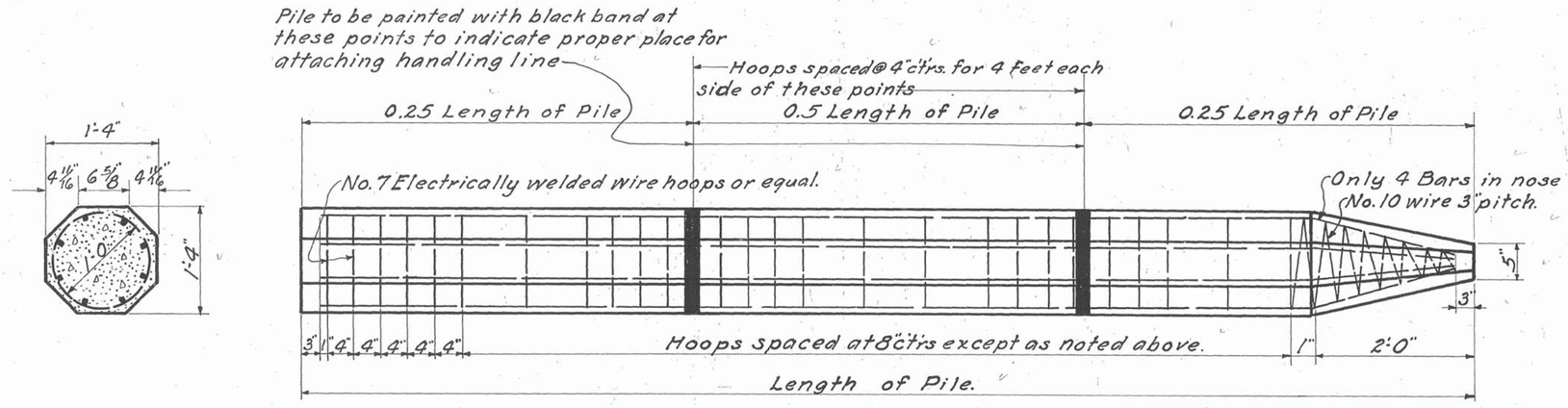

DETAIL OF PRECAST CONCRETE PILE.
TYPE "B".

TYPE "B".

Length of Pile	Long. Reinforcement.	Wgt. of Steel per ft.	Wgt. of Pile per ft.
20 to 25 Ft.	8 - 1/2" ϕ Bars.	5.3 Lbs.	225 Lbs.
26 to 30 Ft.	8 - 1/2" ϕ Bars	6.8 Lbs.	227 Lbs.
31 to 35 Ft.	8 - 5/8" ϕ Bars	8.4 Lbs.	228 Lbs.
36 to 40 Ft.	8 - 3/4" ϕ Bars	12.0 Lbs.	231 Lbs.
41 to 45 Ft.	8 - 7/8" ϕ Bars	16.4 Lbs.	236 Lbs.
46 to 50 Ft.	8 - 7/8" ϕ Bars	16.4 Lbs.	236 Lbs.
51 to 55 Ft.	8 - 1" ϕ Bars	21.4 Lbs.	241 Lbs.
56 to 60 Ft.	8 - 1" ϕ Bars.	27.2 Lbs.	247 Lbs.

SPECIAL NOTE:

For Location of plates required at expansion ends see "Layout Sheet" for the bridge in question. These bolts and plates are to be set at the time the Cap Beam is poured and the top of the bottom plates shall be flush with the top of the beam. Plates to be set with back edges in line on the ℄ of Cap.

NOTE:

In handling the piles, they shall be supported at the quarter points. Piles to be picked up by pulling on both lines uniformly. End of pile not to touch ground unless pile is inclined 1 1/2:1 or steeper.

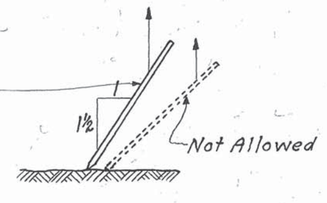

ESTIMATED QUANTITIES.

18'-0" ROADWAY.

ITEM	Steel Reinforcement - All bars 1/2" ϕ					Concrete.
	Bars A		Bars B		Weight	Class "A"
	No.	Length	No.	Length	Total Lbs.	Total Cu. Yds.
Cap	9	21'-9"	14	9'-6"	279	5.26

For each fixed end add for Bars O 21 Lbs. of Steel to above.

20'-0" ROADWAY.

ITEM	Steel Reinforcement - All bars 1/2" ϕ					Concrete
	Bars A		Bars B		Weight	Class "A"
	No.	Length	No.	Length	Total Lbs.	Total Cu. Yds.
Cap	9	23'-9"	14	9'-6"	295	5.74

For each fixed end add for Bars O 24 Lbs of Steel to above.

STATE OF TENNESSEE
DEPARTMENT OF HIGHWAYS AND PUBLIC WORKS
NASHVILLE
STANDARD

CONCRETE PILE BENTS

PRECAST PILES. 18' & 20' ROADWAY

1925.

CORRECT: L. N. Rindlaub — BRIDGE ENGINEER
APPROVED: C. M. McCanless — STATE HIGHWAY ENGINEER

D-4-92.

DESIGNED BY ..... DATE .....
DRAWN BY ..... DATE .....
RETRACED BY Culp ..... DATE Mar. 1932
CHECKED BY ..... DATE .....

11-10-27 Revised Concrete Classification.
Added: Sect for Piles 50'-60' Length Type "A" 7-23-27
Spacing of Piles for 20'-0 roadway bent revised 12-4-25

MICROFILMED