BP1124F.DGN

CONST. 79011-3266-94

PROJECT NO.	YEAR	SHEET NO.
BR-STP-1(283)	2015	

REVISIONS

NO.	DATE	BY	BRIEF DESCRIPTION

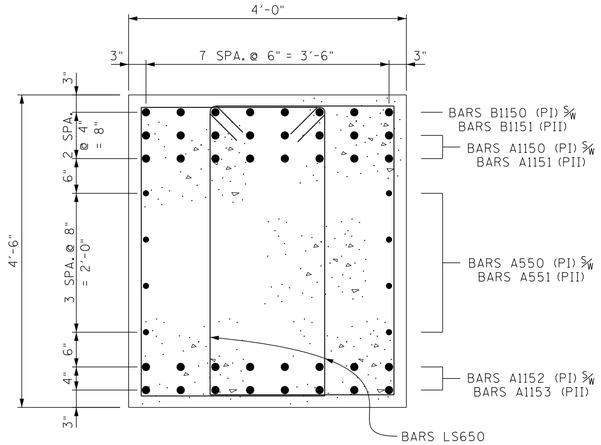

SECTION "A"-"A"

PI DENOTES: PHASE I
PII DENOTES: PHASE II

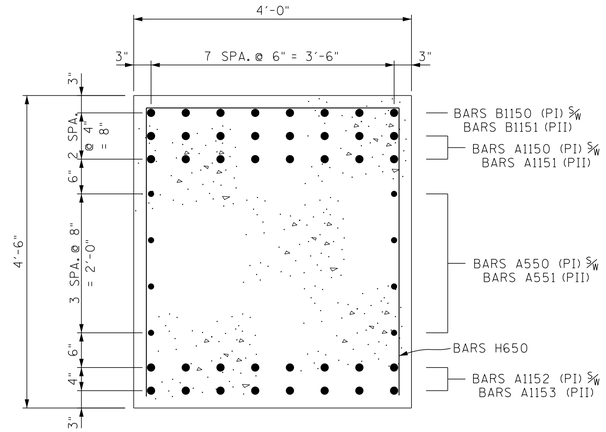

SECTION "B"-"B"

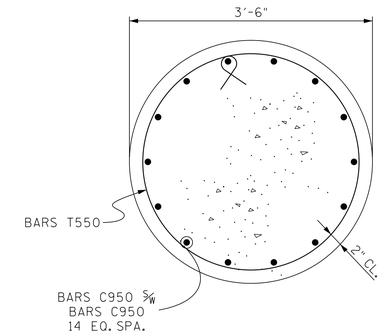

SECTION "C"-"C"

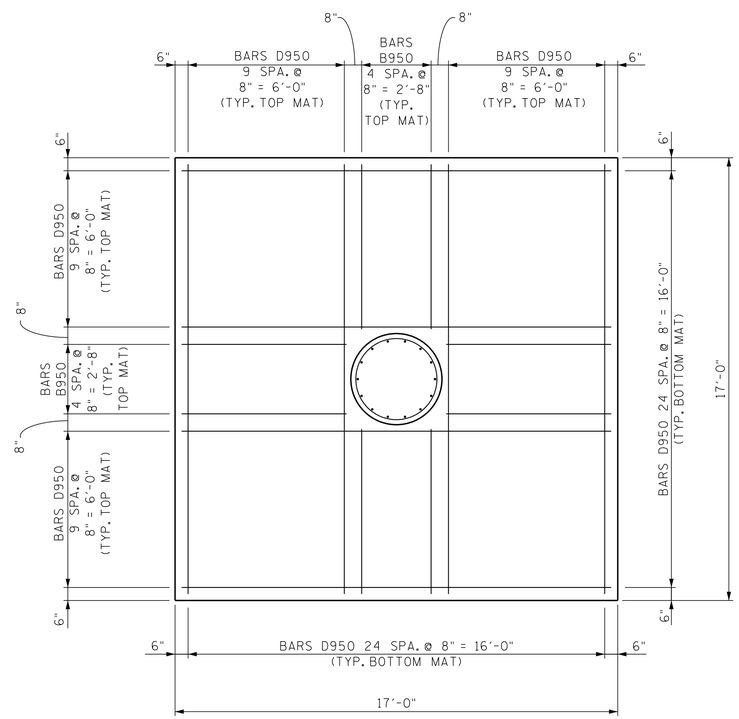

PLAN OF FOOTING

(SHOWING REINFORCEMENT)
(TYP. ALL FOOTINGS)

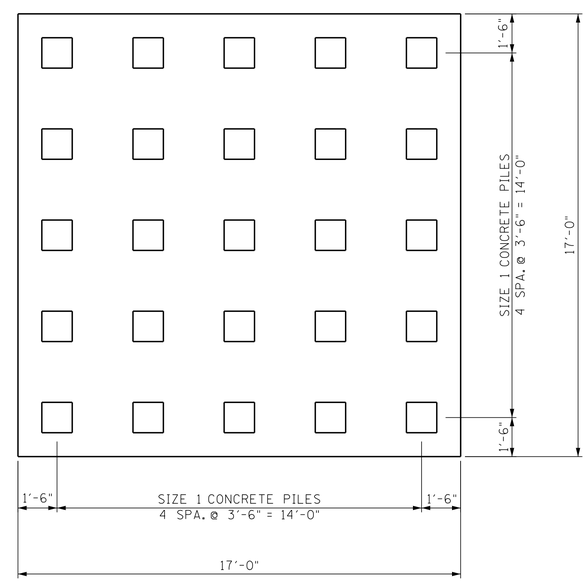

PLAN OF FOOTING

(SHOWING PILES)
(TYP. ALL FOOTINGS)

STATE OF TENNESSEE
DEPARTMENT OF TRANSPORTATION
BENT NOS. 1, 2 & 3 DETAILS
STATE ROUTE 1
OVER
LOOSAHATCHIE RIVER
STATION 1197+55.00
SHELBY COUNTY
2015

CABRINA M. DIETERS
LICENSED PROFESSIONAL ENGINEER
AGRICULTURE
STATE OF TENNESSEE
06/01/2015

CORRECT Wayne G. Sieger
ENGINEER OF STRUCTURES

U-56-138

DESIGNED BY	ADAM PRICE	DATE	06-14
DRAWN BY	CHRIS STAPLER	DATE	01-15
SUPERVISED BY	C.M.D./J.W.F.	DATE	01-15
CHECKED BY	ADAM PRICE	DATE	04-15

$$$$$$$$$$dgnspec$$$$$$$$$$
$$$$$$$$$$cnc$$$$$$$$$$