FED ROAD DIST NO	STATE	FED AID PROJ NO	FISCAL YEAR	SHEET NO	TOTAL SHEETS
3	TENN		19		

Quantities For Cast Curb
Both Sides

Clear Span	Concrete Cu Yds	Reinf Steel Lbs	No Of Bars D1	No Of Bars C2	No Of Bars C1
14	36	206	24	22	12
16	40	235	28	26	12
18	45	265	30	28	12
20	49	294	34	32	12
22	54	324	36	34	12
24	58	353	40	38	12
26	63	382	42	40	12
28	67	412	46	44	12
30	71	441	48	46	12
32	76	470	52	50	12
34	80	500	54	52	12
36	85	529	58	56	12
38	89	559	60	58	12
40	94	588	62	60	12
42	98	617	66	64	12
44	103	647	68	66	12
46	107	676	72	70	12
48	112	706	74	72	12
50	116	735	78	76	12
52	121	764	80	78	12
54	125	794	84	82	12
56	130	823	86	84	12
58	134	853	90	88	24
60	138	882	92	90	24
62	143	911	96	94	24
64	147	941	98	96	24
66	152	970	102	100	24
68	156	1000	106	104	24
70	163	1029	110	108	24
72	167	1058	112	110	24
74	172	1088	116	114	24
76	176	1117	118	116	24
78	181	1147	122	120	24
80	185	1176	124	122	24

NOTE Above Quantities Apply To All Skews
For Skewed Bridge Less Than 90° Curb Bars To Be Flared At Each End Of Span
NOTE Bars D1 To Be Included In Unit Price Bid For Girders

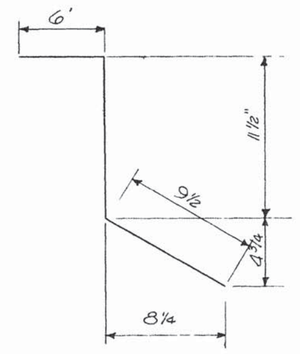

Bars D1 (To Be ½" ϕ)
Total Length = 23

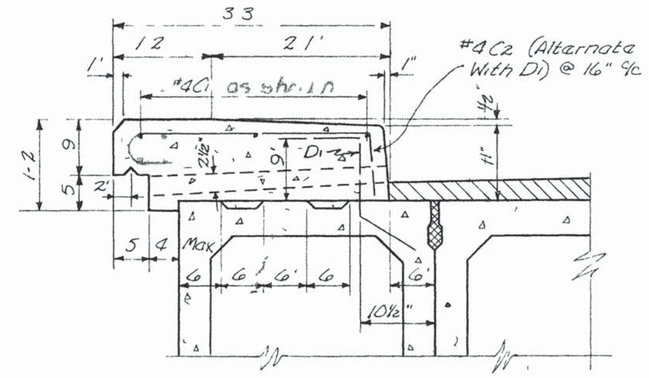

Typical Section For Curb And Exterior Box

NOTE Curb To Be Cast In Place Provisions May Be Made In The Fascia Of Ext Units For Approved Inserts To Facilitate Forming Of Curbs

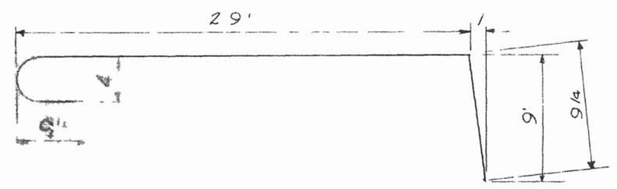

Bars C2
Total Length = 4

NOTE Length Of Longitudinal Bars C1 To Be Total Span Length Minus 6 Also Lap Bars C1 10' When Splice Is Required

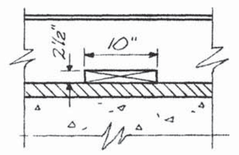

Locate Drain Slots @ Center Of Every Other Railing Panel

Drainage Slot Detail

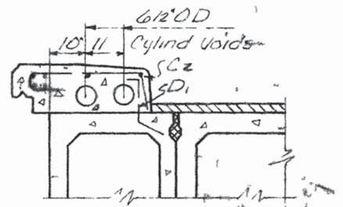

NOTE Cylind Voids To Be Continuo Except They Are Stopped @ 3" On Either Side Of Drainage Slots

Alternate Curb

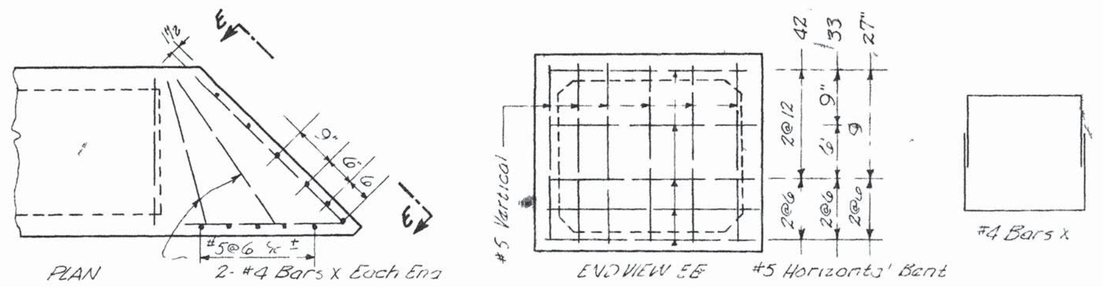

Sketch Showing Additional Reinforcement To Be Placed In Acute Corners Of Prestressed Box Beam

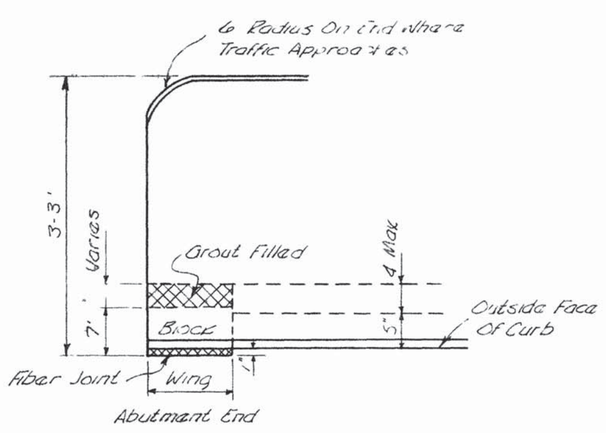

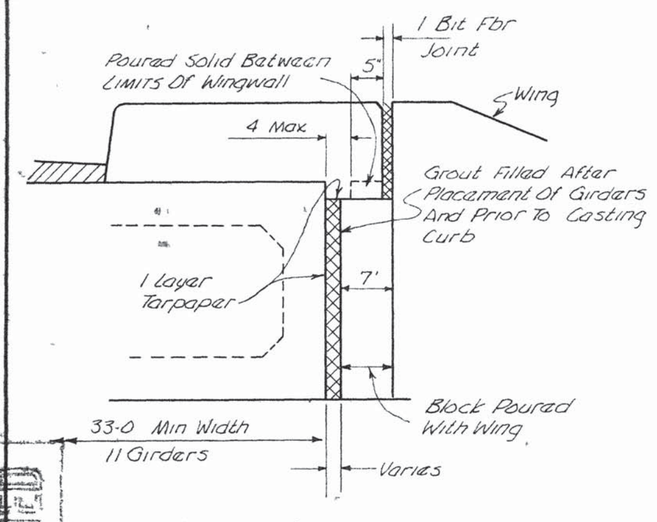

Sketch Showing Curb Detail At Abutment End

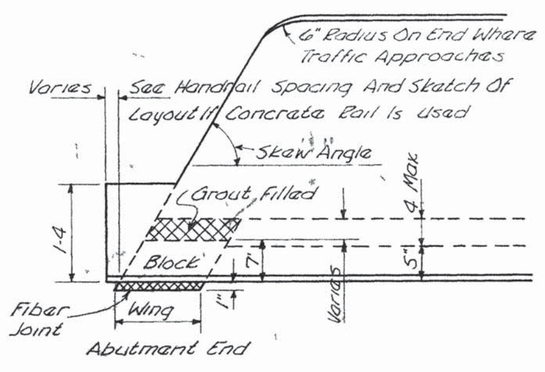

DESIGNED BY		DATE	6-28-57
DRAWN BY	A. Burke	DATE	8-30-60
TRACED BY	B. Brauman & Q. Parker	DATE	
CHECKED BY		DATE	

Revised 6-15-60 Varied 1½ Acute Corner
Revised 4-17-58 Bar D1 Deducted From Reinf Steel Quantities
Revised 3-30-57 Bar Designation changed

MICROFILMED

STATE OF TENNESSEE
DEPARTMENT OF HIGHWAYS AND PUBLIC WORKS
NASHVILLE

STANDARD

PRESTRESSED CONCRETE BRIDGE

PRETENSIONED

CLEAR SPANS 14'-0" - 80'-0"

28'-0" ROADWAY - WITH SAFET CURBS

1957

CORRECT: Fred Prime
BRIDGE ENGINEER

APPROVED: [illegible]
CHIEF HIGHWAY ENGINEER

F-10-85

With Std. Dwg. F-10-84 & F-10-85A