Revised: 12-17 Blocks at Abutment
Revised: 11-5 Concrete 1:2:4 changed to Class "A"
Revised: 2-7-27 NOTE re curb bar type
Revised: 12-17-26 Wt. of structural steel
Revised: 12-11-25 Notes re curb bar and finishing surface. ck. [illegible]

PROJECT NO.		YEAR	SHEET NO.
REVISIONS			
NO.	DATE	BY	BRIEF DESCRIPTION

PRO. ROCS DIST. NO	STATE	FED. AID PROJ. NO	FISCAL YEAR	SHEET NO	TOTAL SHEETS
8	TENN				

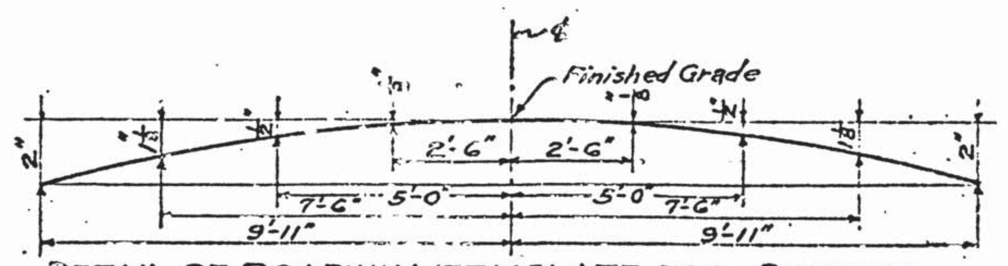

DETAIL OF ROADWAY TEMPLATE FOR GIRDERS

NOTE:
For location and number of these bars see HANDRAIL STANDARD

NOTE:
Curb bar type to be approved by Bridge Engineer.

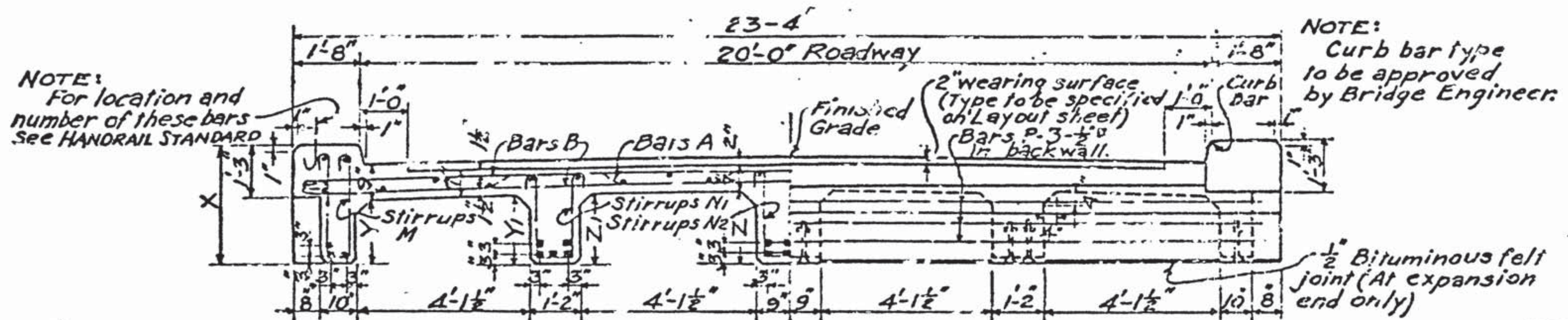

HALF SECTION A-A | HALF END ELEVATION

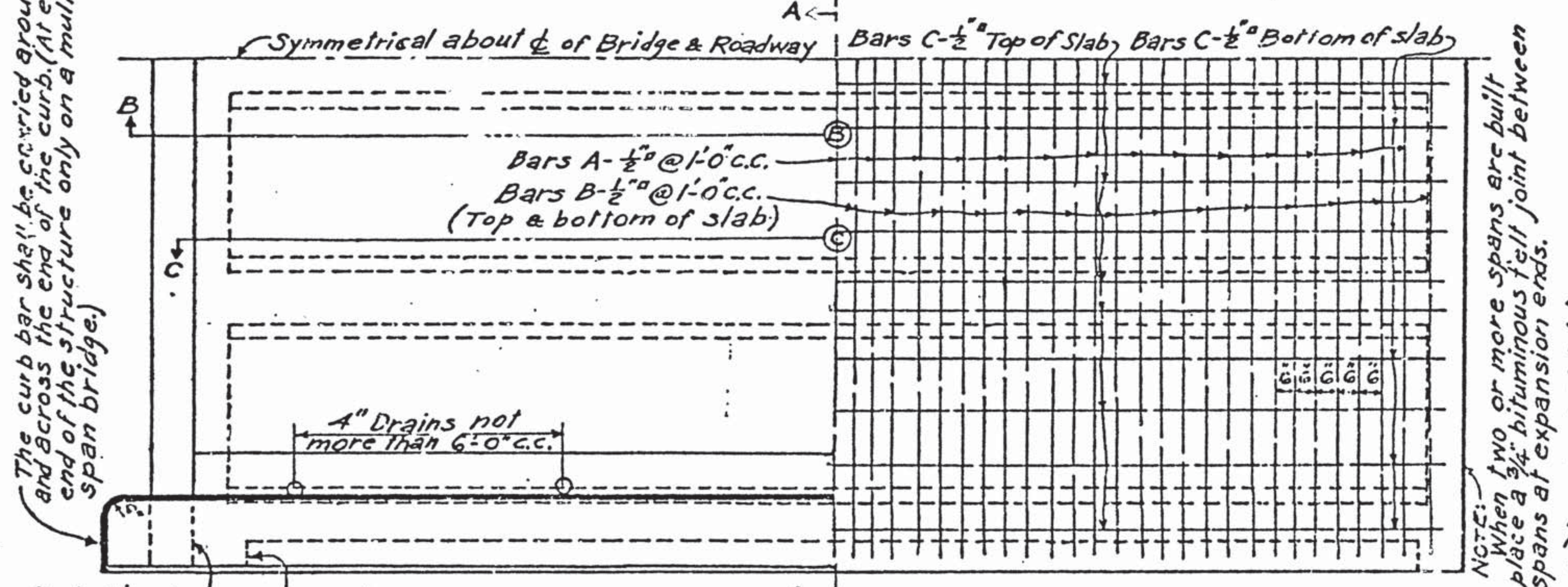

QUARTER PLAN
Note: Edge of this block to be flush with face of abutment wingwall.

QUARTER PLAN
(Showing Slab Reinforcement)

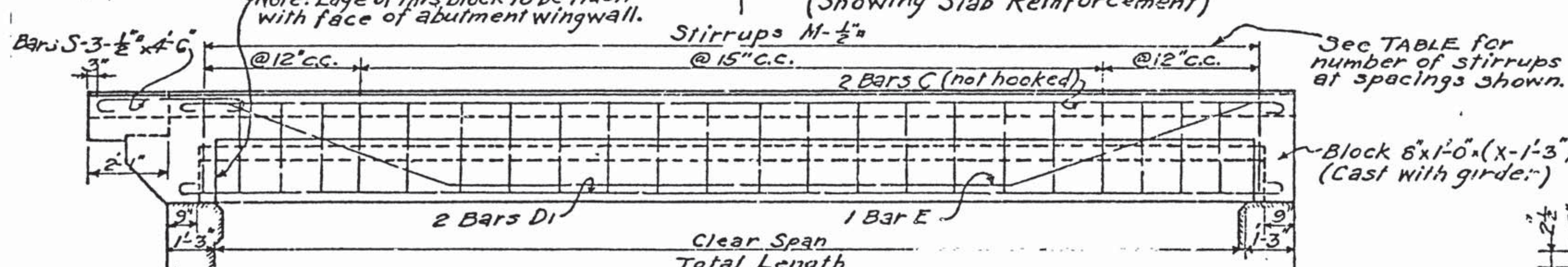

ABUTMENT END | SIDE ELEVATION | AT PIER

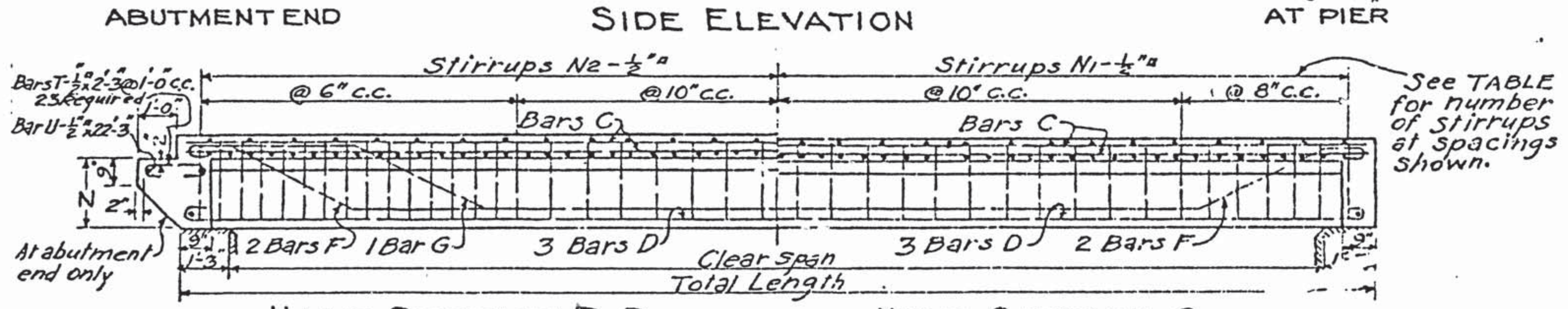

HALF SECTION B-B | HALF SECTION C

NOTE:
In finishing the concrete wearing surface the float shall be operated from bridges resting on the outside curb forms. The surface shall not vary more than ⅛ in 10 ft. when tested with a 10 ft. straight edge applied longitudinally and lapped one-half its length as testing proceeds. The testing shall be done after the water has disappeared from the surface and before initial set takes place.

INTERIOR BEAM | INTERIOR BEAM | EXTERIOR BEAM

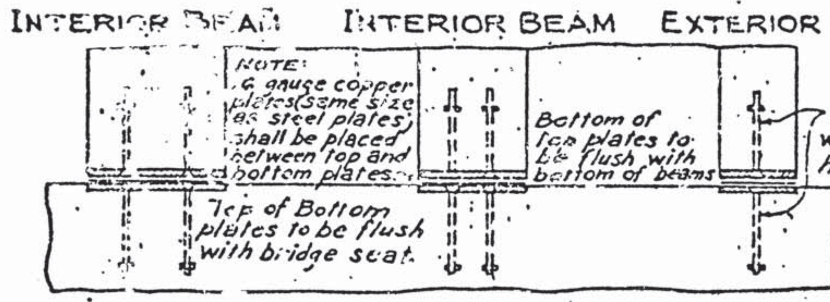

NOTE:
Countersunk holes for ¾" bolts in plates
All plates ½" thick.

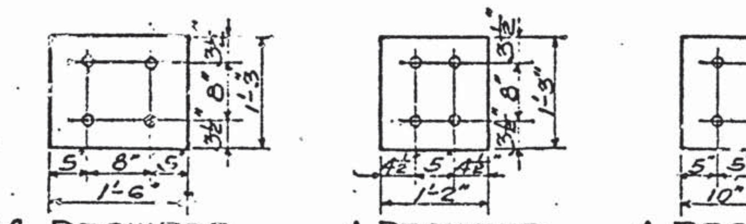

2 REQUIRED | 4 REQUIRED | 4 REQUIRED

DETAILS OF STEEL PLATES FOR EXPANSION END

SPECIAL NOTE:
16 gauge copper plates (same size as steel plates) to be used between top and bottom plates. 5 required each expansion end.

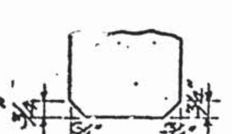

NOTE:
Chamfer all exposed ends thus unless otherwise indicated.

NOTE:
The top of the driveway slab shall always be struck to a template and when the wearing surface is concrete, such surface shall be poured of Class "A" mixture integral with the supporting slab and to the thickness indicated in addition to being struck to a template this surface shall be finished with a long handle float so that it will be free from open or rough places, depressions or projections.
Line and grade of top of curb shall be checked immediately after the pouring of the curb has been completed and any irregularities adjusted at once.
Before the concrete has received its permanent set the top of the curb shall be struck to a true plane and all excess material removed. The curb adjacent to bevels shall be carefully troweled so as to secure true lines and sharp edges.
When pouring curb, provision shall be made for handrail.

DIMENSIONS AND ESTIMATED QUANTITIES

CLEAR SPAN FEET	TOTAL LENGTH FT.-IN.	X	Y	Y1	Z1	Z	STIRRUP SPACING: EXTERIOR BEAM STIRRUPS M	INTERIOR BEAM STIRRUPS N1	INTERIOR BEAM STIRRUPS N2	CONCRETE CU. YDS.	REINF. STEEL LBS.	STRUC. STEEL LBS.
16	18'-6"	2'-5"	1'-1"	1'-2¼"	1'-2½"	1'-3"	3 spaces @ 12", 9 @ 15", 3 @ 12"	26 spaces @ 8"	10 spaces @ 6", 9 @ 10", 10 @ 6"	16.97*	3572*	332
18	20'-6"	2'-7"	1'-3"	1'-4¼"	1'-4½"	1'-5"	4 @ 12", 9 @ 15", 4 @ 12"	29 @ 8"	11 @ 6", 10 @ 10", 11 @ 6"	19.55*	3981*	332
20	22'-6"	2'-8"	1'-4"	1'-5¼"	1'-5½"	1'-6"	4 @ 12", 10 @ 15", 4 @ 12"	32 @ 8"	11 @ 6", 12 @ 10", 11 @ 6"	21.79*	4851*	332
22	24'-6"	2'-9"	1'-5"	1'-6¼"	1'-6½"	1'-7"	4 @ 12", 12 @ 15", 4 @ 12"	6 @ 8", 16 @ 10", 6 @ 8"	12 @ 6", 13 @ 10", 12 @ 6"	24.11*	5247*	332
24	26'-6"	2'-10"	1'-6"	1'-7¼"	1'-7½"	1'-8"	4 @ 12", 14 @ 15", 4 @ 12"	6 @ 8", 21 @ 10", 6 @ 8"	14 @ 6", 13 @ 10", 14 @ 6"	26.48*	6338*	332
26	28'-6"	2'-11"	1'-7"	1'-8¼"	1'-8½"	1'-9"	4 @ 12", 15 @ 15", 4 @ 12"	6 @ 6", 23 @ 10", 6 @ 8"	15 @ 6", 15 @ 10", 15 @ 6"	28.94*	6811*	332

NOTE:
* See TABLES OF ADDITIONAL ESTIMATED QUANTITIES below

SPECIAL NOTE:
The cost of C.I. Drains, curb bars & bituminous felt joints shall be included in price per cu. yd. of Class "A" concrete.
Cost of copper plates shall be included in cost per pound of structural steel.

BILL OF STEEL

CLEAR SPAN FEET	BARS A-½" Slab Reinf. NO.	LENGTH	BARS B-½" Slab Reinf. NO.	LENGTH	BARS C-½" Spacing Bar NO.	LENGTH	BARS D Ext. & Int. Bm. Reinf. NO.	SIZE	LENGTH	BARS E Exterior Bm. Reinf. NO.	SIZE	LENGTH	BARS F Interior Bm. Reinf. NO.	SIZE	LENGTH	BARS G Interior Bm. Reinf. NO.	SIZE	LENGTH	BARS M-½" Stirrups Ex. B. NO.	LENGTH	BARS N1-½" Stirrups Int. B. NO.	LENGTH	BARS N2-½" Stirrups Int. B. NO.	LENGTH	BARS P-½" Backwall NO.	LENGTH
16	17	24'-6"	36	23'-8"	26	18'-0"	13	1"	19'-8"	2	1"	20'-6"	6	1"	20'-2"	1	1"	20'-2"	32	5'-6"	54	4'-7"	30	5'-1"	6	23'-0"
18	19	24'-6"	40	23'-8"	26	20'-0"	13	1"	21'-8"	2	1"	22'-6"	6	1"	22'-3"	1	1"	22'-3"	35	5'-10"	60	4'-11"	33	5'-5"	6	23'-0"
20	21	24'-6"	44	23'-8"	26	22'-0"	13	1⅛"	23'-10"	2	1⅛"	24'-7"	6	1⅛"	24'-5"	1	1⅛"	24'-5"	38	6'-0"	66	5'-1"	35	5'-7"	6	23'-0"
22	23	24'-6"	48	23'-8"	26	24'-0"	13	1¼"	25'-10"	2	1¼"	26'-7"	6	1¼"	26'-6"	1	1¼"	26'-6"	42	6'-2"	62	5'-3"	38	5'-9"	6	23'-0"
24	25	24'-6"	52	23'-8"	26	26'-0"	13	1¼"	28'-0"	2	1¼"	28'-10"	6	1¼"	28'-9"	1	1¼"	28'-9"	45	6'-4"	68	5'-5"	42	5'-11"	6	23'-0"
26	27	24'-6"	56	23'-8"	26	28'-0"	13	1¼"	30'-0"	2	1¼"	30'-10"	6	1¼"	30'-8"	1	1¼"	30'-8"	48	6'-6"	72	5'-7"	46	6'-1"	6	23'-0"

STEEL BENDING TABLE

CLEAR SPAN FEET	BAR D f	BARS E a	b	c	d	e	BARS F a	b	c	d	e	BARS G a	b	c	d	e	BARS M h	BAR N1 h	BAR N2 h
16'-0"	18'-0"	1'-0"	3'-6"	9'-0"	1'-3"	3'-10"	1'-0"	1'-9"	12'-6"	1'-0"	2'-0"	2'-9"	1'-9"	9'-0	1'-0	2'-0"	2'-1"	1'-5½"	1'-6½"
18'-0"	20'-0"	1'-0"	4'-0"	10'-0"	1'-10"	4'-4"	1'-0"	2'-0	14'-0	1'-2	2'-3¾	3'-0"	2'-0	10'-0	1'-2"	2'-3¾	2'-3"	1'-7½"	1'-8½"
20'-0"	22'-0	1'-0	4'-6	11'-0	1'-11"	4'-10½	1'-0"	2'-3	15'-6	1'-3	2'-6¾	3'-3"	2'-3"	11'-0	1'-3	2'-6¾	2'-4"	1'-8½"	1'-9½"
22'-0	24'-0	1'-0	5'-0"	12'-0	2'-0	5'-3"	1'-0"	2'-6	17'-0	1'-4	2'-10	3'-6"	2'-6	12'-0	1'-4	2'-10	2'-5	1'-9½"	1'-10½"
24'-0	26'-0	1'-0	5'-6	13'-0	2'-1"	5'-10	1'-0	2'-9"	18'-6	1'-5"	3'-1"	3'-9	2'-9"	13'-0	1'-5	3'-1"	2'-6"	1'-10½"	1'-11½"
26'-0"	28'-0	1'-0	6'-0	14'-0	2'-2	6'-4½	1'-0"	3'-0"	20'-0	1'-6"	3'-4½	4'-0"	3'-0	14'-0	1'-6"	3'-4½	2'-7"	1'-11½"	2'-0½"

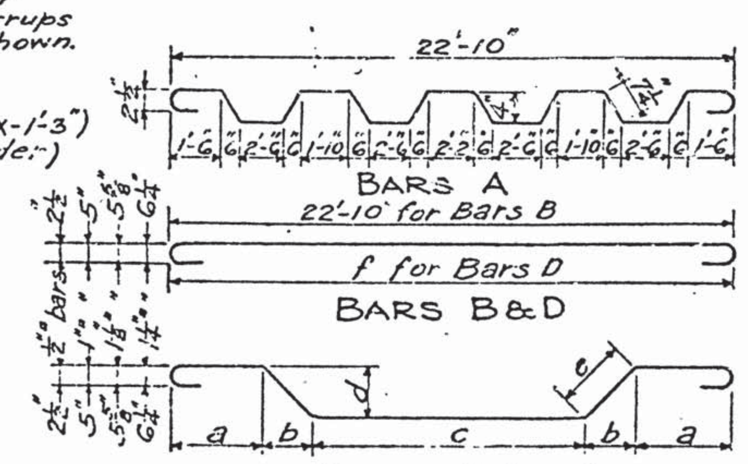

BARS A
BARS B & D
BARS E, F & G
BENDING DIAGRAMS

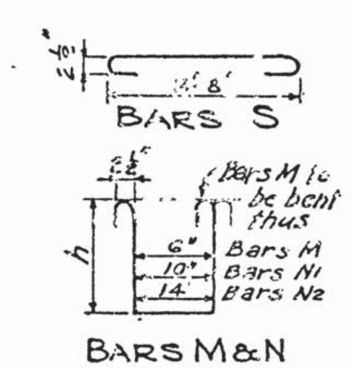

BARS S
BARS M & N

General Notes
Specifications: Standard Road & Bridge Specifications of the Tennessee Department of Highways & Public Works.
Concrete shall be Class "A" with Class "A" aggregate.
Curbs, slabs and beam-stems must be poured at same time allowing no time for initial set to take place between them.
Reinforcing steel shall be deformed bars of structural steel or intermediate grade made by the O.H. process.
All dimensions relating to reinforcement are to centers of bars.
Where splicing of reinforcement is necessary all bars are to be lapped 40 diameters.
Forms: See Specifications.
Finish: See Specifications.

ADDITIONAL ESTIMATED QUANTITIES REQUIRED AT EACH ABUTMENT

CLEAR SPAN	CURB PROJECTION AND ADDITIONAL IN BLOCKS AT ABUTMENT: CONCRETE CU. YDS.	STEEL LBS.
16'-0"	.338	23
18'-0"	.340	23
20'-0"	.341	23
22'-0"	.342	23
24'-0"	.343	23
26'-0"	.344	23

ESTIMATED QUANTITIES FOR ONE BRACKET AT END OF BRIDGE

CLEAR SPAN	CONCRETE CU. YDS.	STEEL LBS.
16'-0"	.87	63
18'-0"	.94	63
20'-0"	.97	63
22'-0"	1.01	63
24'-0"	1.05	63
26'-0"	1.08	63

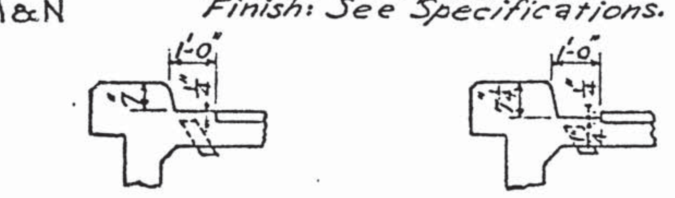

DETAIL OF GUTTER FOR CONCRETE WEARING SURFACE | DETAIL OF GUTTER FOR BITUMINOUS WEARING SURFACE

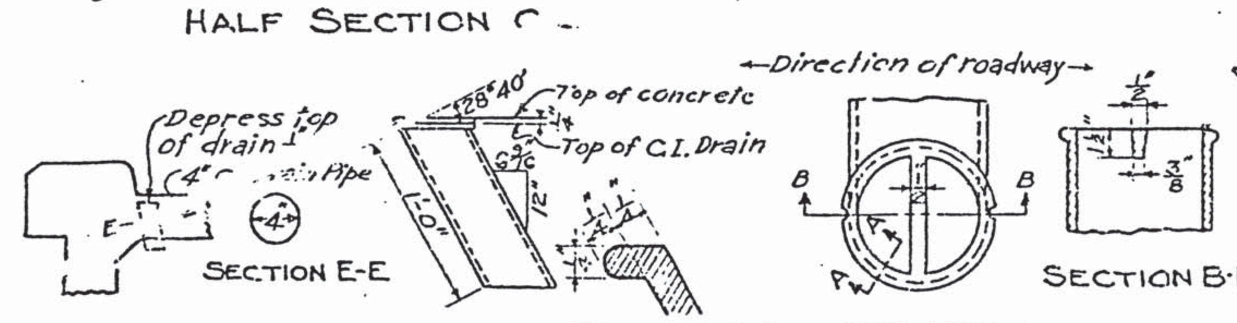

SECTION E-E | SECTION A-A | TOP VIEW | SECTION B-B

DETAIL OF 4" CAST IRON DRAIN PIPE

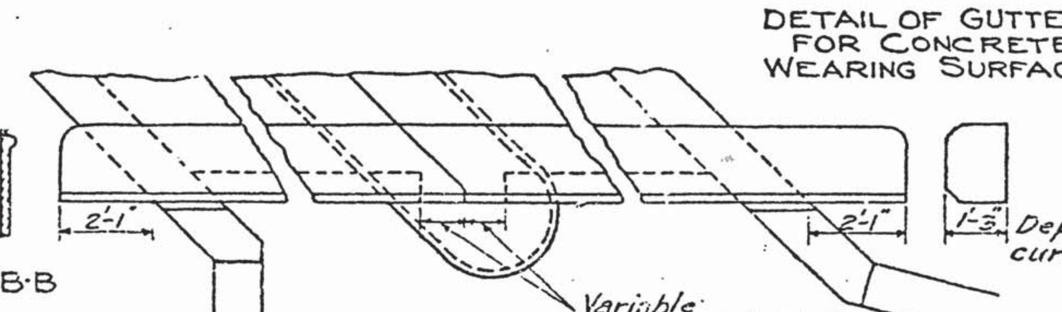

DETAIL OF CURB FOR SKEWED GIRDERS

STATE OF TENNESSEE
DEPARTMENT OF HIGHWAYS AND PUBLIC WORKS
NASHVILLE

STANDARD
CONCRETE DECK GIRDER BRIDGES
SPANS 16' TO 26' ROADWAY 20'-0"
1925

CORRECT Fred Grau(?) BRIDGE ENGINEER
APPROVED [signature] STATE HIGHWAY ENGINEER

DESIGNED BY ______ DATE ______
DRAWN BY ______ DATE ______
SUPERVISED BY ______ DATE ______
CHECKED BY ______ DATE ______

D-4-75