BP1124F.DGN

CONST. 79011-3266-94

PROJECT NO.	YEAR	SHEET NO.
BR-STP-1(283)	2015	

REVISIONS

NO.	DATE	BY	BRIEF DESCRIPTION

DENOTES: 60" (±1") INSIDE DIAMETER STEEL REINFORCED HIGH-DENSITY POLYETHYLENE PIPE. USE DUROMAXX OR APPROVED EQUIVALENT.

DENOTES: VOID TO BE FILLED WITH WATER ACTIVATED FLEXIBLE POLYURETHANE FOAM INJECTION RESIN. USE PRIME FLEX 940 OR APPROVED EQUIVALENT. CONTRACTOR SHALL BE RESPONSIBLE FOR FOLLOWING ALL MANUFACTURER'S DIRECTIONS AND SAFETY PRECAUTIONS.

DENOTES: 60" (±1") INSIDE DIAMETER STEEL REINFORCED HIGH-DENSITY POLYETHYLENE PIPE. USE DUROMAXX OR APPROVED EQUIVALENT.

DENOTES: 4" OF CONCRETE (7"(±1") SLUMP) TO BE PLACED IN BOTTOM OF VOID PRIOR TO BACKFILLING AROUND COLUMN. APPROXIMATELY 0.125 CUBIC YARDS OF CONCRETE REQUIRED.

NOTE: CONTRACTOR SHALL TAKE ALL NECESSARY PRECAUTIONS SO AS TO NOT DAMAGE OR DISPLACE COLUMN CASING PIPES DURING BACKFILL OPERATIONS. ANY PIPE DAMAGE OR DISPLACEMENT SHALL BE REPAIRED AT THE CONTRACTOR'S EXPENSE.

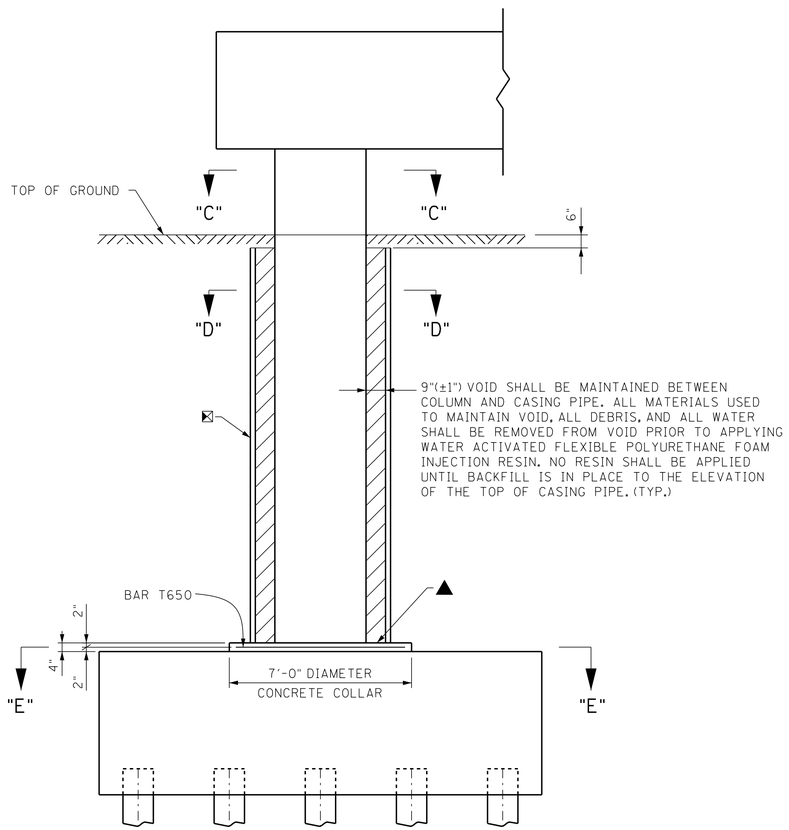

COLUMN ENCASEMENT DETAILS

(FOR SECTION "C"-"C" SEE DWG. NO. U-56-138)
(COLUMN REINFORCEMENT NOT SHOWN FOR CLARITY)

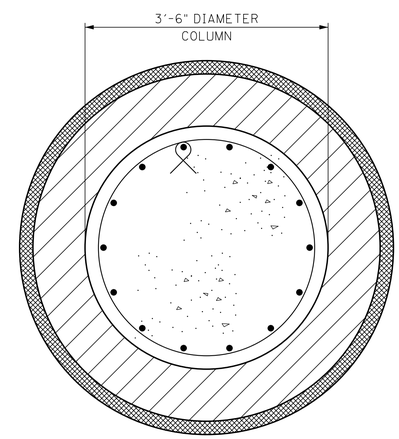

SECTION "D"-"D"

(FOR BAR SPACING AND DESIGNATIONS
SEE SECTION "C"-"C" ON DWG. NO. U-56-138)

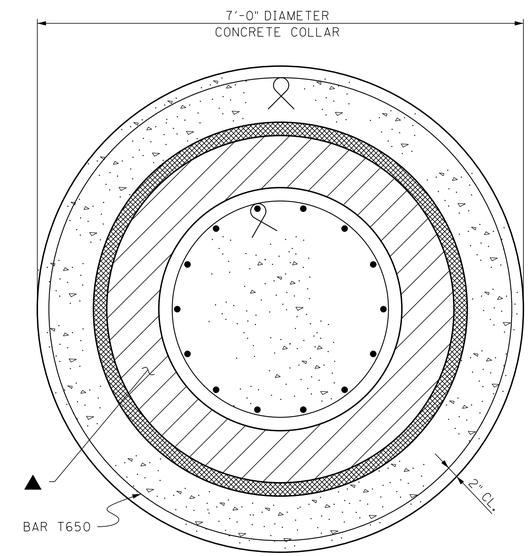

SECTION "E"-"E"

(FOR BAR SPACING AND DESIGNATIONS
SEE SECTION "C"-"C" ON
DWG. NO. U-56-138)

STATE OF TENNESSEE
DEPARTMENT OF TRANSPORTATION

BENT NOS. 1, 2 & 3 DETAILS
STATE ROUTE 1
OVER
LOOSAHATCHIE RIVER
STATION 1197+55.00
SHELBY COUNTY
2015

CABRINA M. DIETERS
STATE OF TENNESSEE
AGRICULTURE
04-14-2015

CORRECT
ENGINEER OF STRUCTURES

DESIGNED BY	ADAM PRICE	DATE	06-14
DRAWN BY	CHRIS STAPLER	DATE	01-15
SUPERVISED BY	C.M.D./J.W.F.	DATE	01-15
CHECKED BY	ADAM PRICE	DATE	04-15

U-56-139