AB1128F.DGN

CONST. NO. 79011-3266-94

PROJECT NO.	YEAR	SHEET NO.
BR-STP-1(283)	2015	

REVISIONS

NO.	DATE	BY	BRIEF DESCRIPTION

NOTE: FOR SECTION D-D SEE DWG. NO. U-56-134.

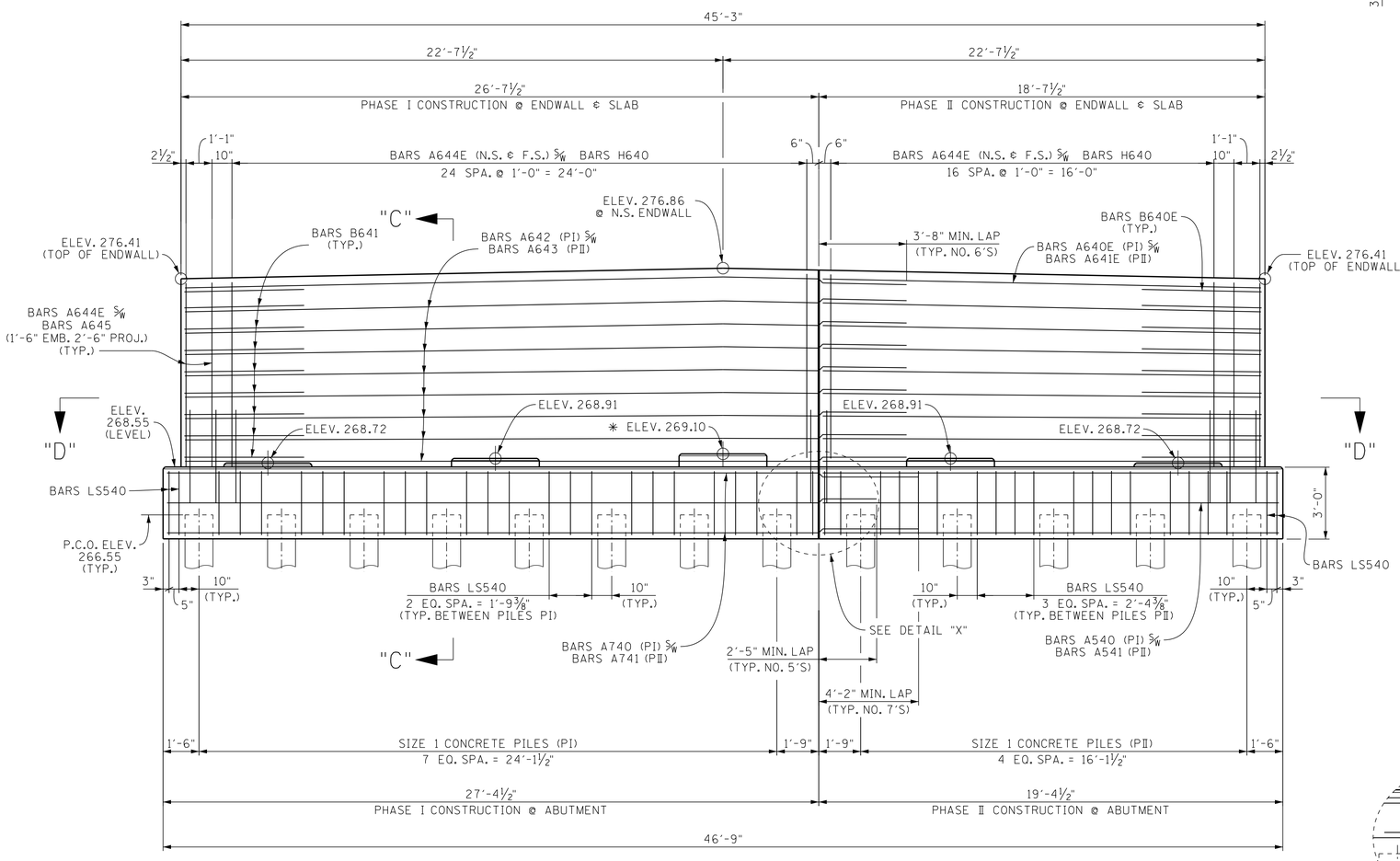

ELEVATION
(LOOKING FORWARD ON SURVEY)

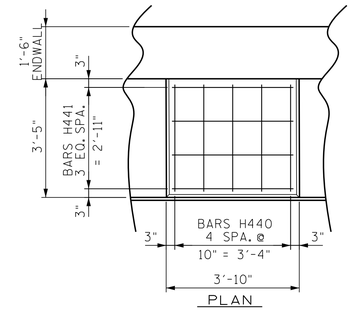

PLAN

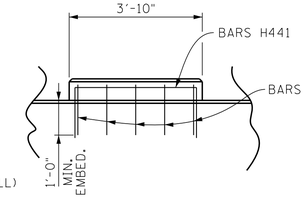

ELEVATION

REINFORCED RISER BLOCK DETAILS

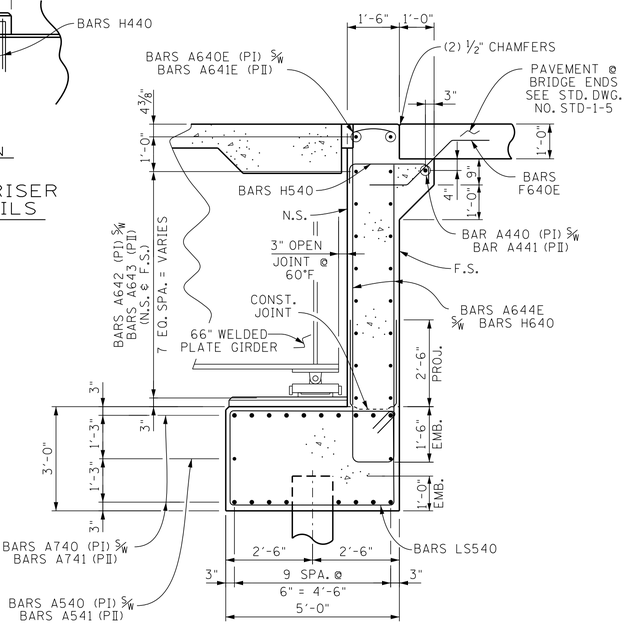

SECTION "C-C"

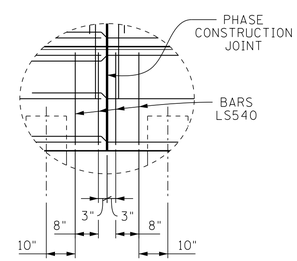

DETAIL "X"

* DENOTES: RISER BLOCK TO BE REINFORCED. SEE DETAILS THIS SHEET.

PI DENOTES: PHASE I CONSTRUCTION

PII DENOTES: PHASE II CONSTRUCTION

P.C.O. DENOTES: PILE CUT-OFF

N.S. DENOTES: NEAR SIDE.

F.S. DENOTES: FAR SIDE.

STATE OF TENNESSEE
DEPARTMENT OF TRANSPORTATION
ABUTMENT NO. 2 DETAILS
STATE ROUTE 1
OVER
LOOSAHATCHIE RIVER
STATION 1197+55.00
SHELBY COUNTY
2015

CABRINA M. DIETERS — STATE OF TENNESSEE

CORRECT Wayne J. Sejed
ENGINEER OF STRUCTURES

DESIGNED BY	ADAM PRICE	DATE	04-14
DRAWN BY	RODNEY CHANDLER	DATE	02-15
SUPERVISED BY	C.M.D. / J.W.F.	DATE	02-15
CHECKED BY	ADAM PRICE	DATE	04-15

U-56-133