FED. ROAD DIST. NO.	STATE	FED. AID PROJ. NO.	F. Y. YEAR	SHEET NO.	TOTAL SHEETS
3	TENN.		19		

PRINTED B.P.R. 3-28-65

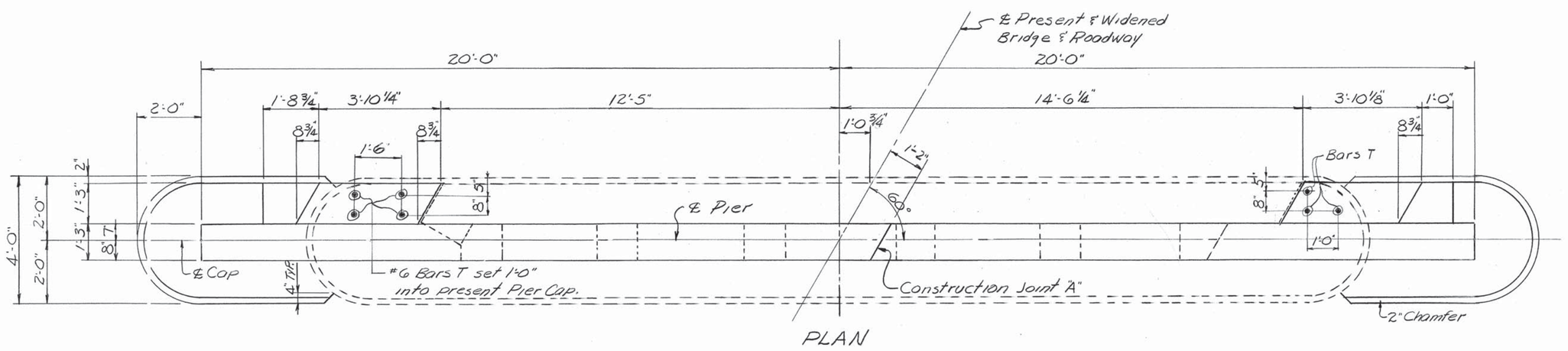

PLAN

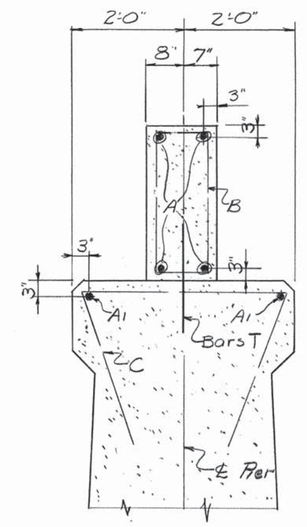

SECTION A-A

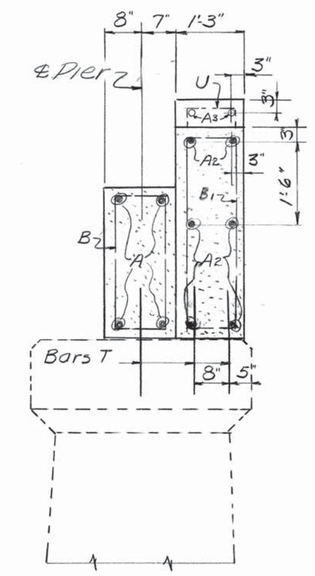

SECTION B-B

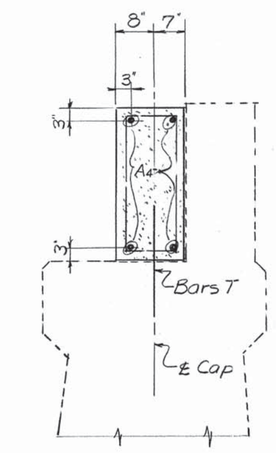

SECTION C-C

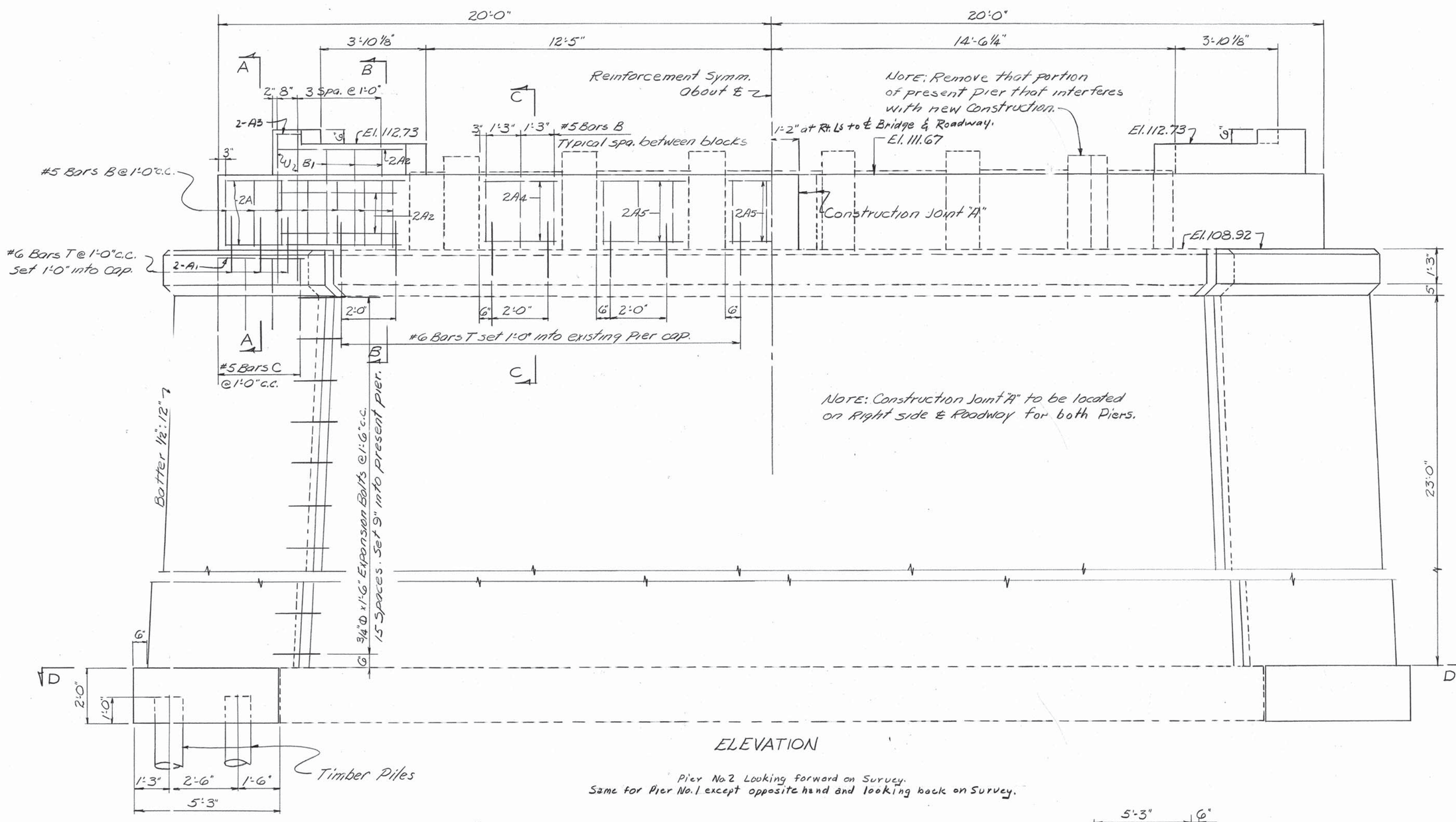

ELEVATION

Pier No. 2 Looking forward on Survey.
Same for Pier No. 1 except opposite hand and looking back on Survey.

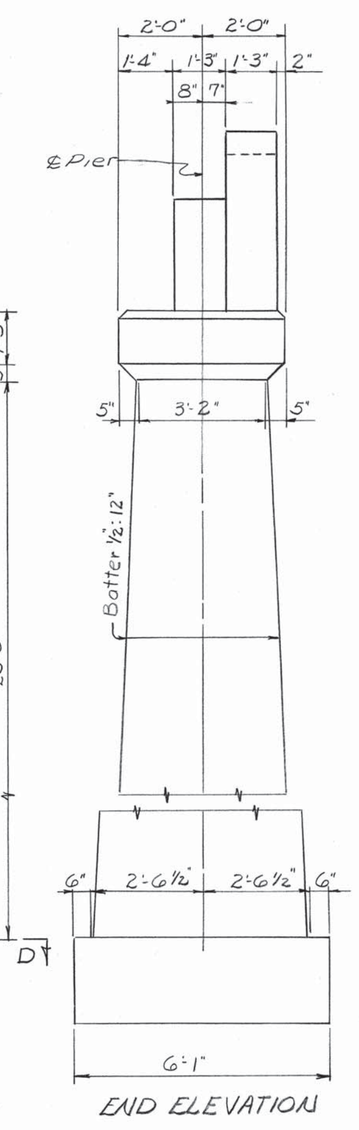

END ELEVATION

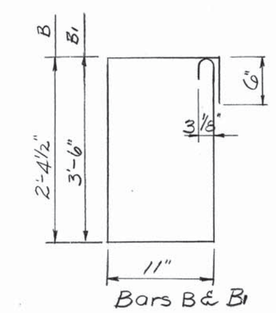

Bars B & B1

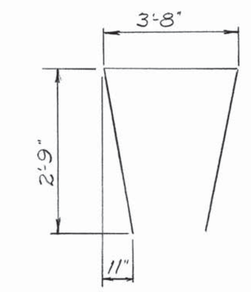

Bars C

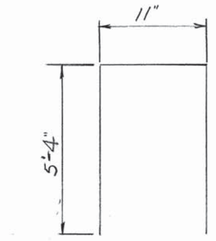

Bars U

BILL OF STEEL
For One Pier

Bar	No.	Size	Length
A	8	#5	7'-6"
A1	4	#5	3'-9"
A2	12	#5	4'-6"
A3	4	#5	0'-9"
A4	8	#5	2'-9"
A5	12	#5	3'-0"
B	29	#5	7'-7"
B1	6	#5	9'-10"
C	8	#5	9'-6"
B1	27	#6	9'-10"
U	4	#5	11'-7"

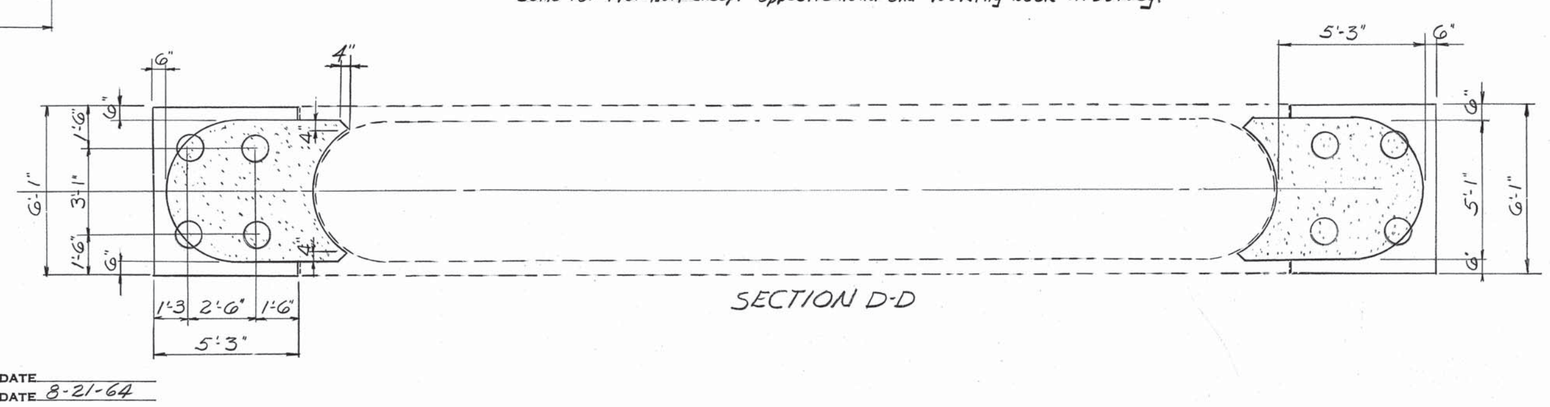

SECTION D-D

ESTIMATED QUANTITIES

ITEM	Concrete Class "A" Cu. Yds.	Reinforcing Steel Lbs.
Pier No. 1	49.0	1013
Pier No. 2	49.0	1013

Required: 32-¾"Φ x 1'-6" Expansion Bolts (Each Pier)

STATE OF TENNESSEE
DEPARTMENT OF HIGHWAYS
NASHVILLE

DETAILS OF BRIDGE WIDENING
PIERS NO. 1 & 2
STA. 1193+87.9
SHELBY CO.
1964

DESIGNED BY _____ DATE _____
DRAWN BY R. Bingham DATE 8-21-64
TRACED BY _____ DATE _____
CHECKED BY _____ DATE _____

CORRECT Fred Graves BRIDGE ENGINEER
APPROVED _____ STATE BRIDGE ENGINEER

K-43-

MICROFILMED