FED. ROAD DIST. NO.	STATE	FED. AID PROJ. NO.	FISCAL YEAR	SHEET NO.	TOTAL SHEETS
8	TENN.		19		

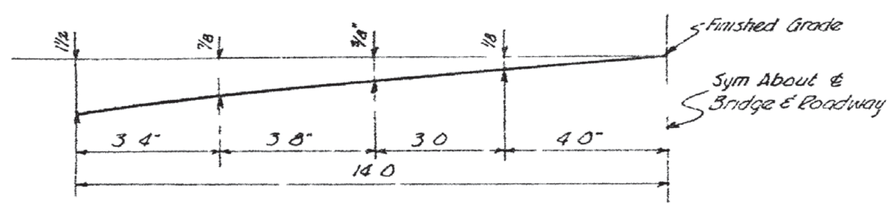

DETAIL OF ROADWAY TEMPLATE

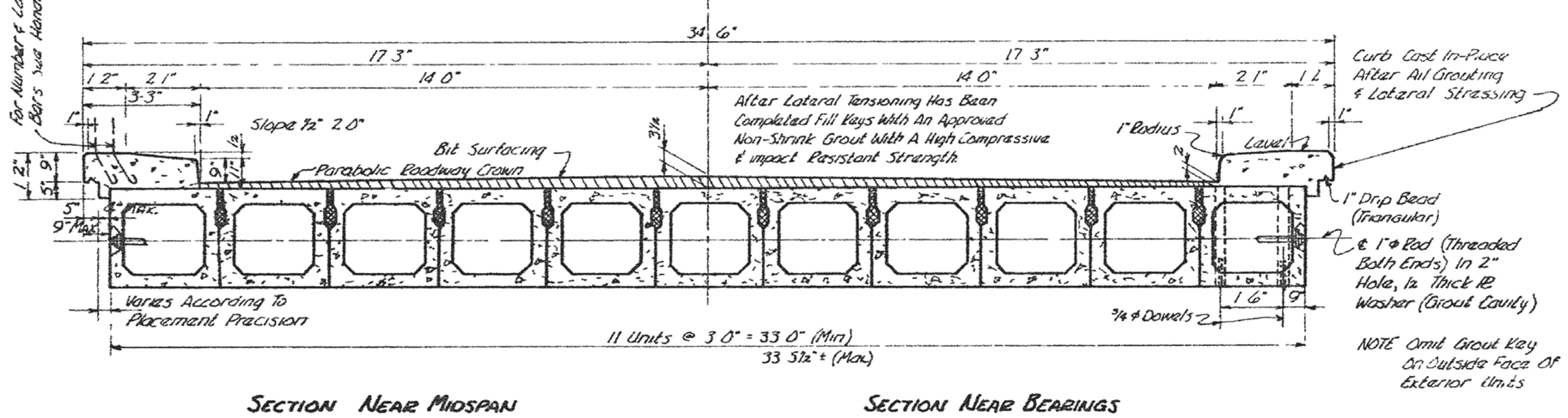

SECTION NEAR MIDSPAN

SECTION NEAR BEARINGS

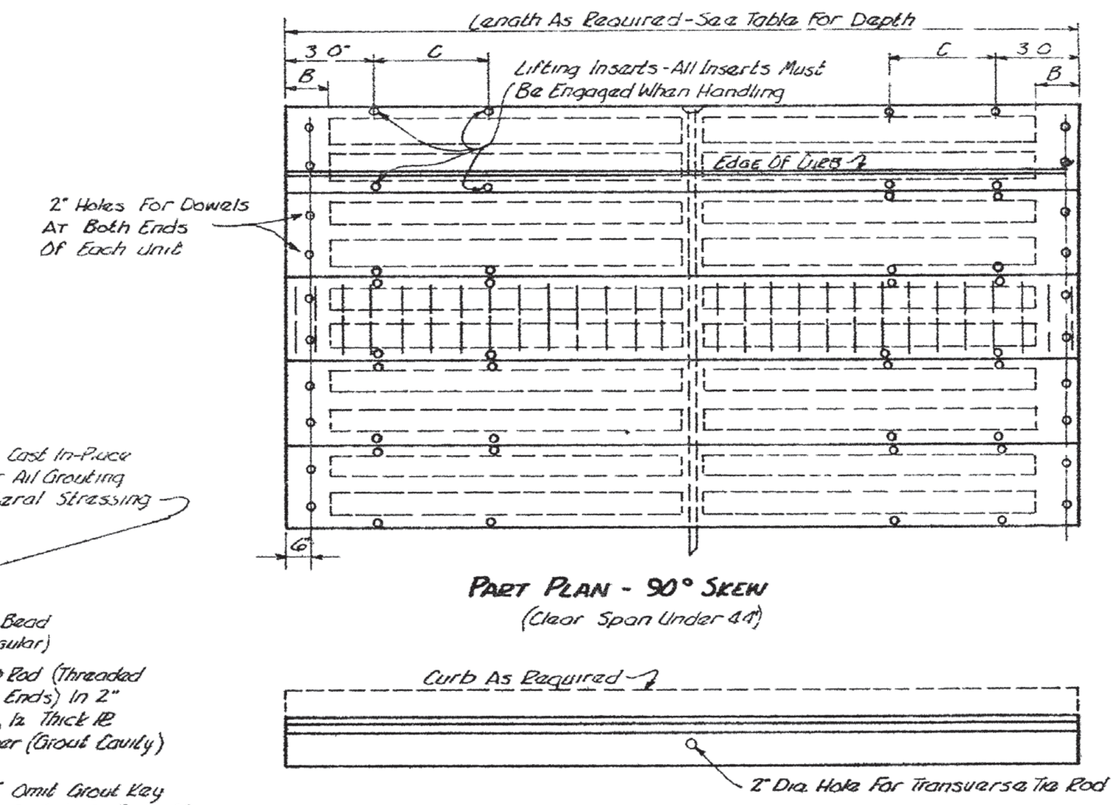

PART PLAN - 90° SKEW
(Clear Span Under 44')

ELEVATION

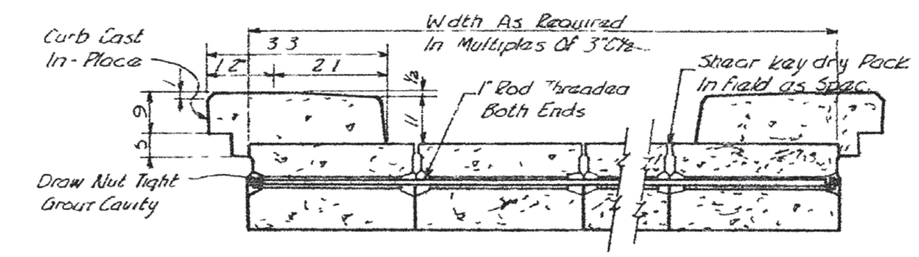

SECTION AT TRANSVERSE TIE
90° SKEW

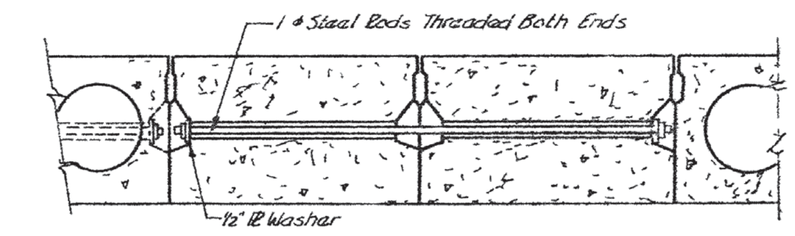

SECTION AT TRANSVERSE TIE
SKEW AS REQUIRED

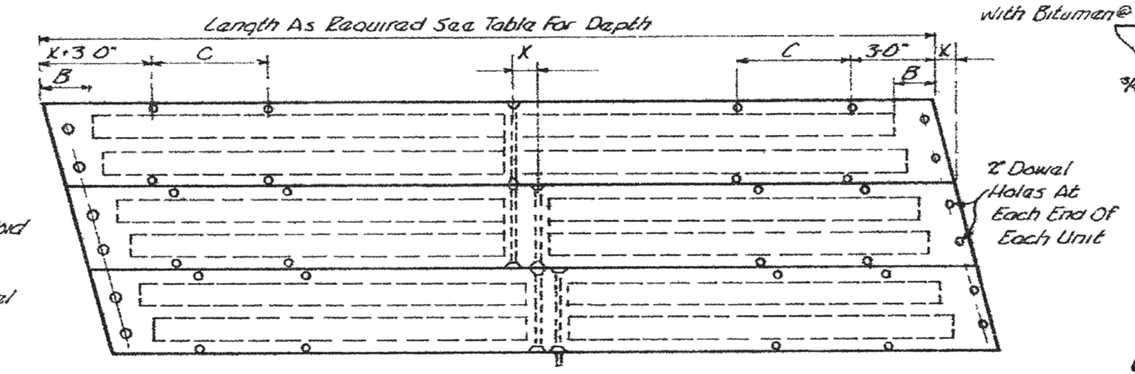

PART PLAN - SKEW AS REQUIRED

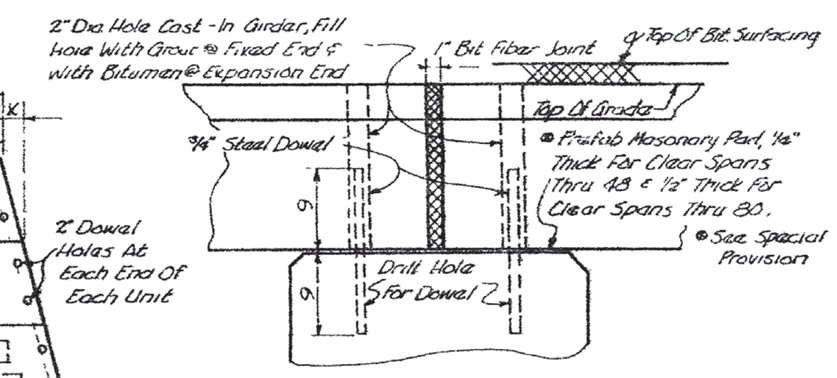

ELEVATION AT ABUTMENT - PIER OR BENT

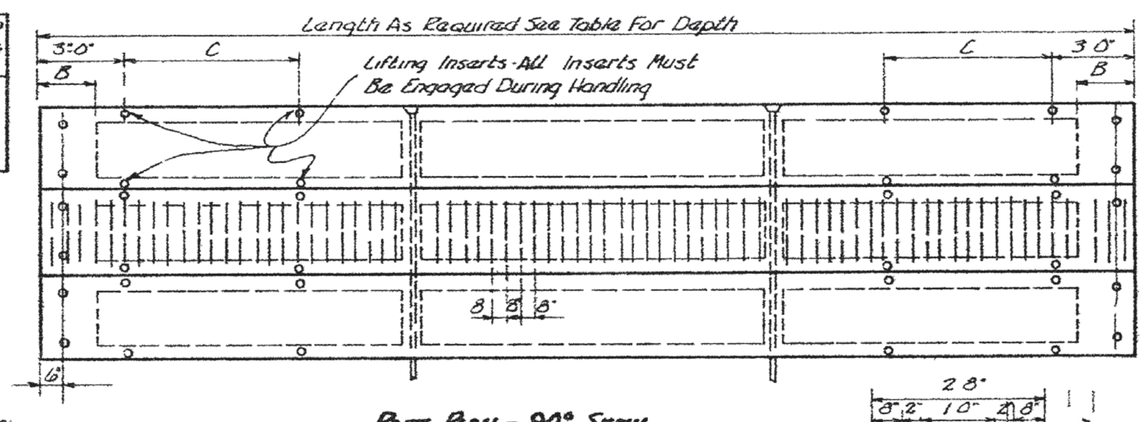

PART PLAN - 90° SKEW
(Clear Span Over 44')

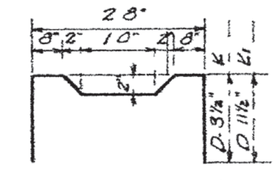

No 4 Bars Type K and L

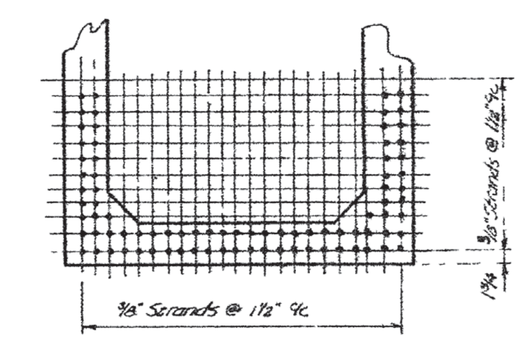

TYPICAL PATTERN FOR PRESTRESSING STEEL

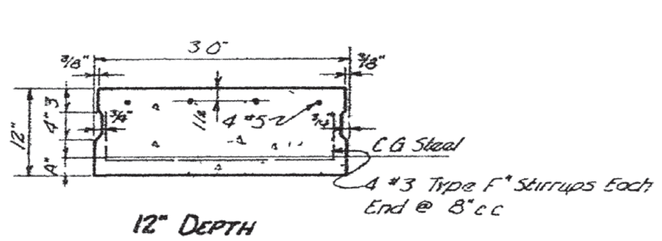

12" DEPTH

Clear Span Feet	A Inches	B Inches		Prestressed Steel Area	No. 3/8" Strands	Weight Basic Member	Suggested Bearing
14	225	Omit		0.96	12	7,350	12"
16	216	"		1.20	15	6,225	
18	244	"		1.52	19	8,200	
20	264	"		1.76	22	9,700	
22	284	"		2.08	26	10,600	

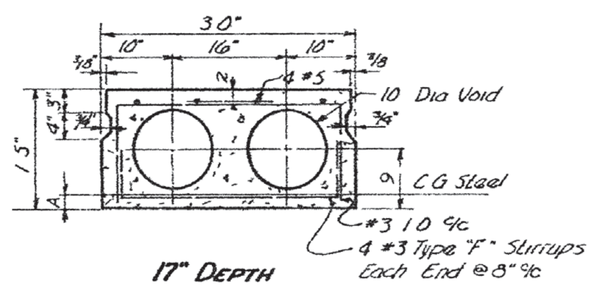

17" DEPTH

Clear Span Feet	A Inches	B Inches		Prestressed Steel Area	No 3/8" Strands	Weight Basic Member	Suggested Bearing
24	222	18		1.2[illegible]	[illegible]	12,20[illegible]	12"
26	220			1.36	17	13,950	
28	225			1.60	20	14,400	
30	230			1.76	22	15,350	
32	262			2.00	25	16,300	
34	275			2.16	27	17,250	

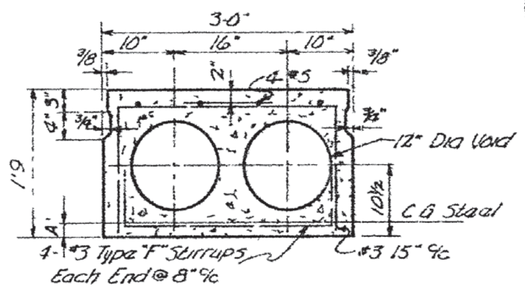

21" DEPTH

Clear Span Feet	A Inches	B Inches		Prestressed Steel Area	No 3/8" Strands	Weight Basic Member	Suggested Bearing
36	230	18		1.76	22	22,450	12"
38	231			1.92	24	23,200	
40	264			2.16	27	24,350	
42	320			2.48	31	25,500	

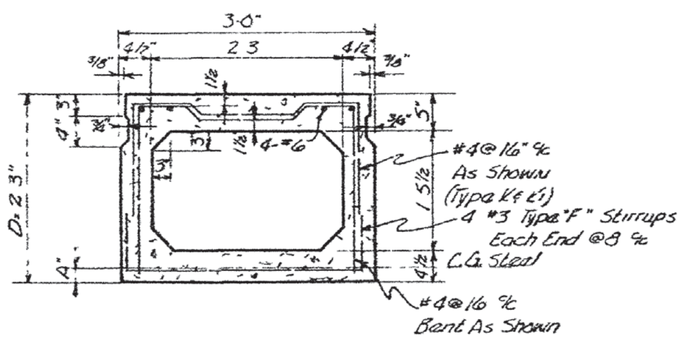

27" DEPTH

Clear Span Feet	A Inches	B Inches		Prestressed Steel Area	No. 3/8" Strands	Weight Basic Member	Suggested Bearing
44	230	18		1.76	22	27,100	12"
46	226			1.84	23	28,300	
48	227			2.00	25	29,300	
50	235			2.24	28	30,500	
52	263			2.40	30	31,600	
54	293			2.56	32	32,800	
56	323			2.80	35	33,900	

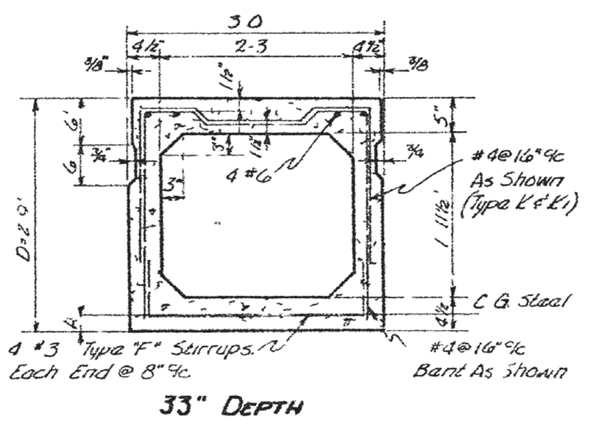

33" DEPTH

Clear Span Feet	A Inches	B Inches		Prestressed Steel Area	No. 3/8" Strands	Weight Basic Member	Suggested Bearing
58	247	18		2.32	29	39,900	12"
60	263			2.48	31	41,800	
62	303			2.64	33	42,600	
64	338			2.88	36	43,900	
66	363			3.04	38	45,200	
68	390			3.28	41	46,500	

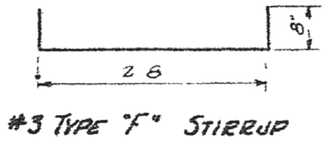

#3 TYPE "F" STIRRUP

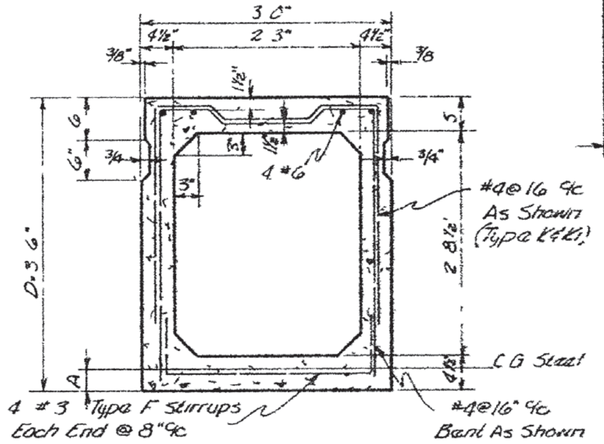

42" DEPTH

Clear Span Feet	A Inches	B Inches		Prestressed Steel Area	No 3/8" Strands	Weight Basic Member	Suggested Bearing
70	312	18		2.72	34	51,300	18" 12" Min
72	323			2.88	36	52,960	
74	369			3.04	38	54,620	
76	407			3.20	40	56,280	
78	432			3.36	42	57,940	
80	422			3.42	44	59,600	

GENERAL NOTES.

SPECIFICATIONS Standard Road & Bridge Specifications Of The Tennessee Department Of Highways
LOADING H20-S16-44
CONCRETE (Cast in Place) To Be Class "A"
PRECAST, PRETENSIONED CONCRETE See Specifications
REINFORCING STEEL See Specifications.
FORMS & FINISH See Specifications.
HANDLING PRE-TENSIONED DECK-UNIT See Specifications.
LATERAL TENSIONING Prior To Grouting Longitudinal, Keys Of In Place Deck Units, The Nuts Of The Transverse Rods Shall Be Given Two Full Turns From Hand Tight Position, To Develope A Stress Of 30,000 PSI, In Rods
PRETENSIONING STEEL: An Initial Force Of 14,000 Lbs. Shall Be Applied To Each Strand In All Beams
The Design Is Based On Federal Bureau Criteria & Special Provision.

STATE OF TENNESSEE
DEPARTMENT OF HIGHWAYS AND PUBLIC WORKS
NASHVILLE

STANDARD
PRESTRESSED CONCRETE BRIDGE
PRETENSIONED
CLEAR SPANS 14'-0" TO 80-0"
28'-0" ROADWAY WITH SAFETY CURBS
1957

CORRECT: Fred Groves
ASSISTANT ENGINEER
APPROVED: C. D. Long
STATE HIGHWAY ENGINEER

F-10-84

WITH STD. DWG. F-10-83 & 85

DESIGNED BY — DATE
DRAWN BY A. BUERS — DATE 6 26 57
EOTRACED BY B. BAUMAN — DATE 8 30 60
CHECKED BY — DATE

Revised 7/22/61 - Revising dowel Bars #4 to #5 added
Revised 4 17 58 (Size of Welds & Spacing of ⅜" ø Dowels Changed)
Revised 12 17 57 Spec. added For Fabricators
Revised 9 30 57 (Drip bead location changed)
Revised 9 11 57 - (Note 4" Stirrups & Dowel holes added)
Revised 8 22 57 (Rod & Washer Note added)

Rev. 4/14/61 - Lifting dowel Bars #4 to #5 added