BP1124F.DGN

CONST. NO. 79011-3266-94

PROJECT NO.	YEAR	SHEET NO.
BR-STP-1(283)	2015	

REVISIONS

NO.	DATE	BY	BRIEF DESCRIPTION

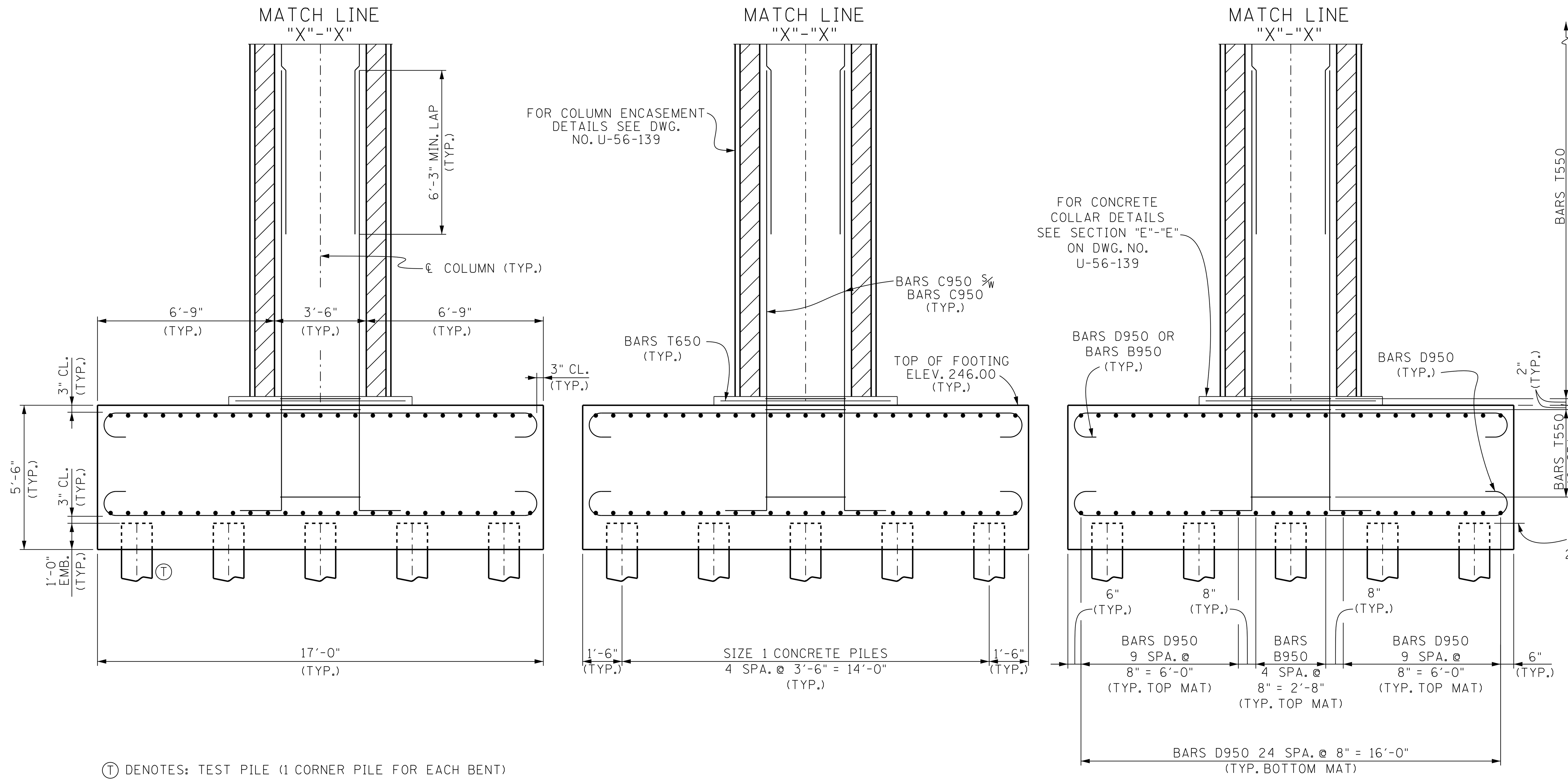

Ⓣ DENOTES: TEST PILE (1 CORNER PILE FOR EACH BENT)

P.C.O. DENOTES: PILE CUT-OFF

ELEVATION

(LOOKING FORWARD ON SURVEY)

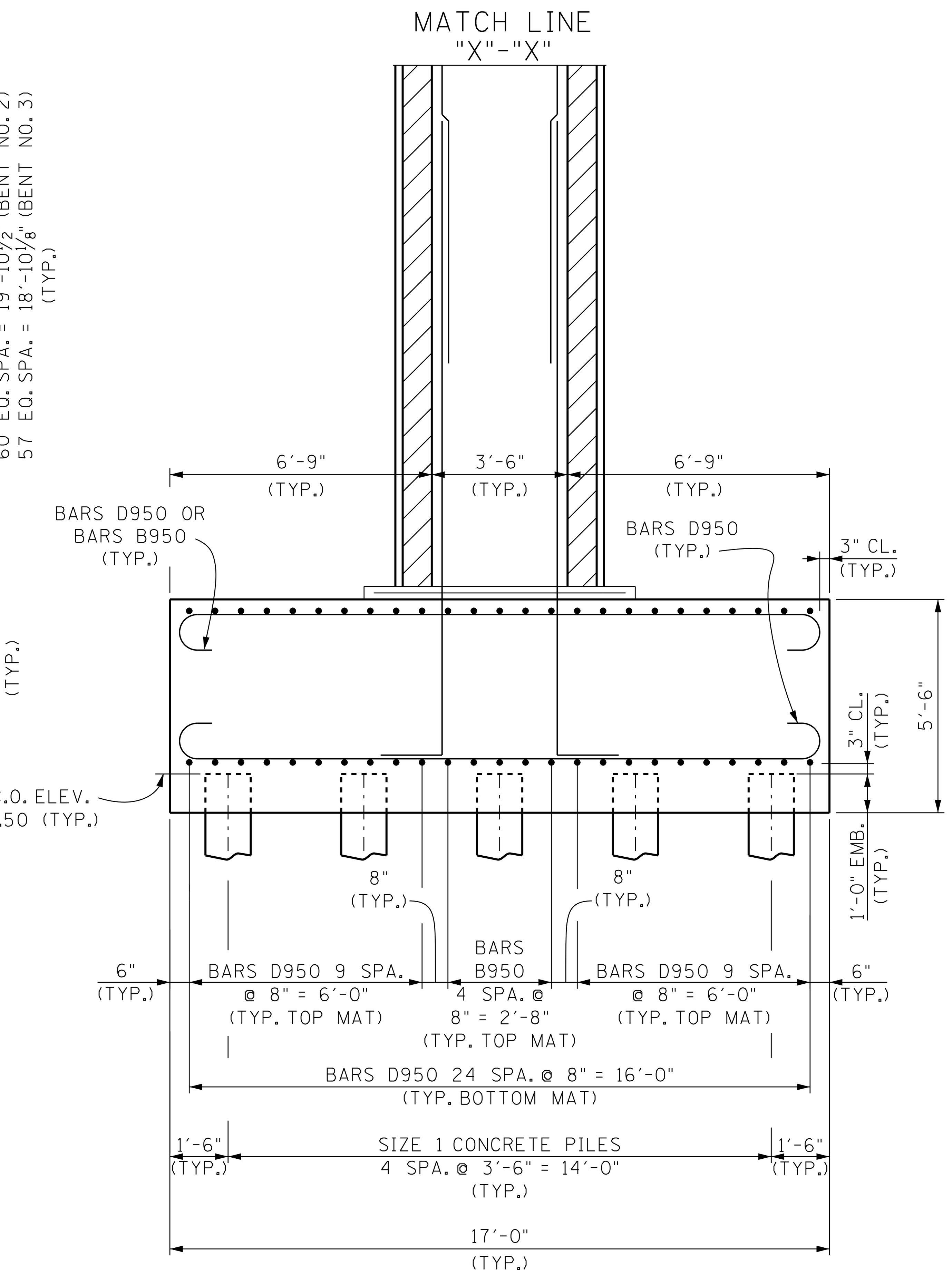

END ELEVATION

STATE OF TENNESSEE
DEPARTMENT OF TRANSPORTATION

BENT NOS. 1, 2 & 3 DETAILS
STATE ROUTE 1
OVER
LOOSAHATCHIE RIVER
STATION 1197+55.00
SHELBY COUNTY
2015

CABRINA M. DIETERS Registered Engineer XVI AGRICULTURE COMMERCE STATE OF TENNESSEE 05/01/2015

CORRECT ____________ ENGINEER OF STRUCTURES

DESIGNED BY ADAM PRICE DATE 06-14
DRAWN BY CHRIS STAPLER DATE 01-15
SUPERVISED BY C.M.D./J.W.F. DATE 01-15
CHECKED BY ADAM PRICE DATE 04-15

U-56-137