FED. ROAD DIST. NO.	STATE	FED. AID PROJ. NO.	FISCAL YEAR	SHEET NO.	TOTAL SHEETS
3	TENN.		19		

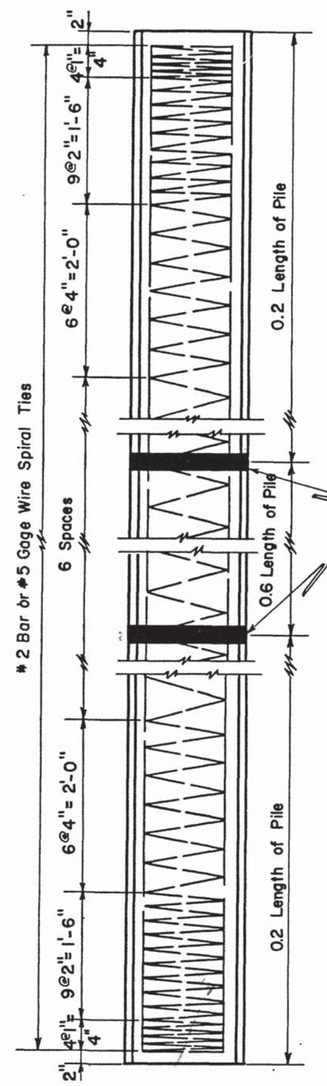

Piles To Be Painted With Black Bands At These Points To Indicate Proper Place For Attaching Handling Line.

PRECAST CONCRETE PILE

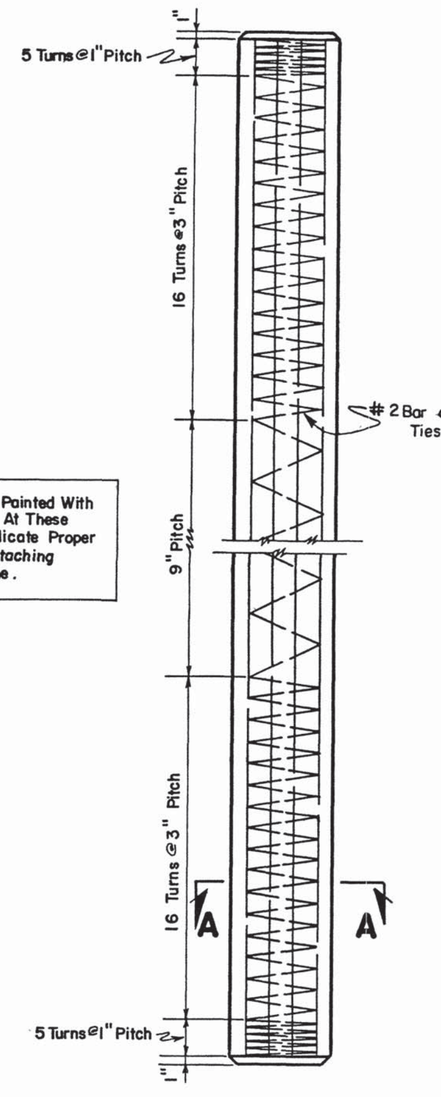

PRESTRESSED CONCRETE PILE

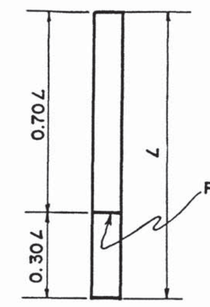

SINGLE POINT PICK-UP

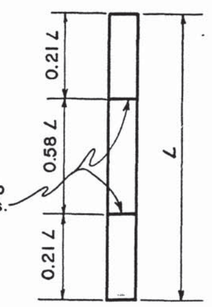

DOUBLE POINT PICK-UP

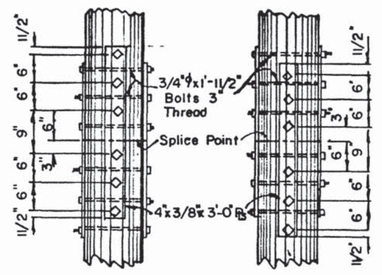

NOTES: (1.) Maximum Length Single Pick Up Point - 60'-0"
(2.) Maximum Length Double Pick Up Point - 85'-0"
(3.) Piles To Be Marked At These Points To Indicate Proper Place For Attaching Handling Lines.
(4.) For Greater Lengths Three Point Pick-up Is Required.

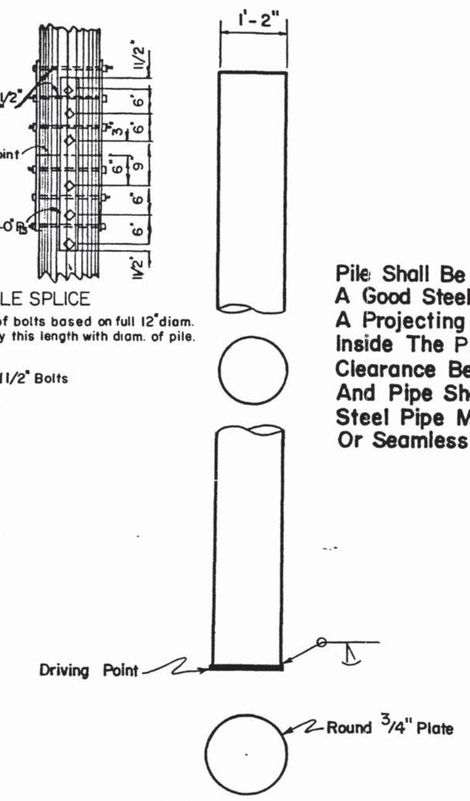

Pile Shall Be Driven With A Good Steel Head Having A Projecting Ring Fitting Inside The Pipe. Clearance Between Ring And Pipe Should Be 1/4". Steel Pipe May Be Welded Or Seamless Steel.

PIPE PILE

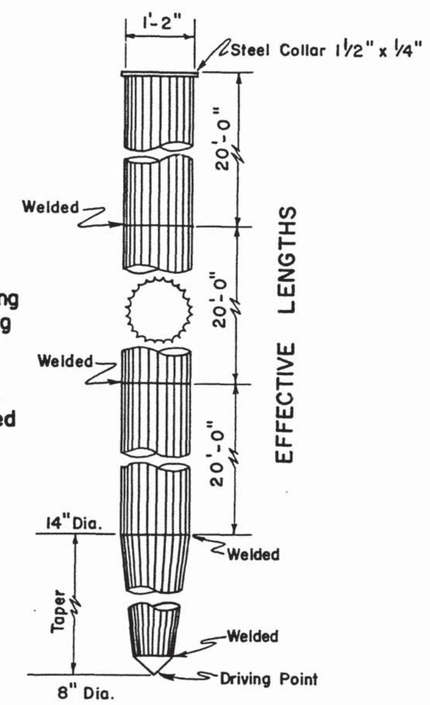

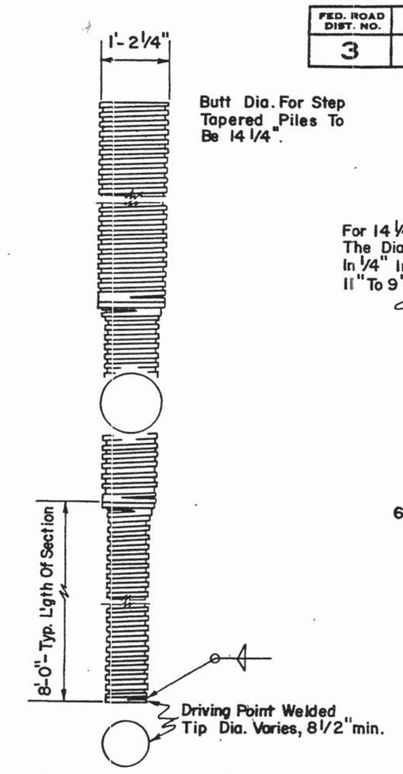

STEP TAPER PILE

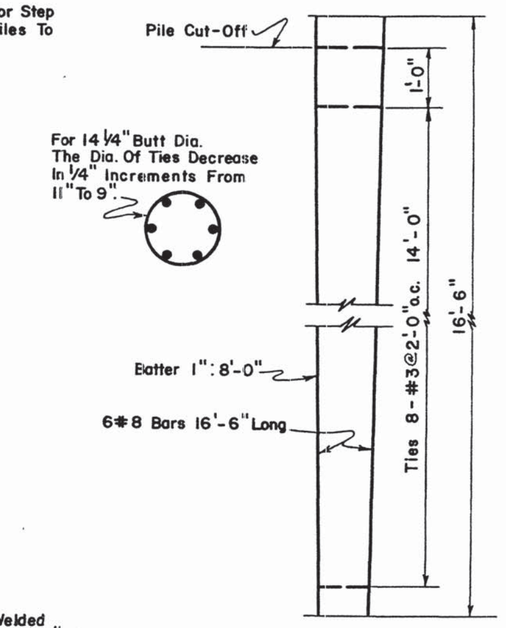

STEEL CAGE FOR MANDREL DRIVEN PILE.

CAST IN PLACE PILES

NOTE: Concrete In Cast In Place Piles To Be Class "A"

NOTE: If Additional Driving Is Necessary, Use 2" Pitch For Spiral Ties Within These Limits.

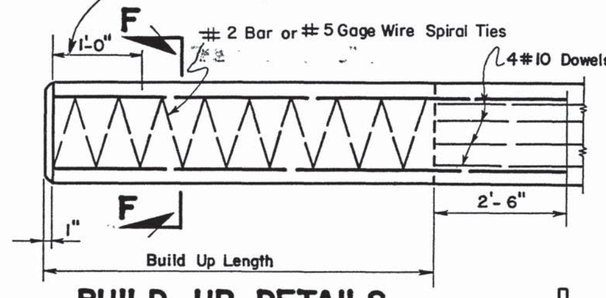

BUILD UP DETAILS

NOTE: Driving Of Built-Up Piles Shall Be Permitted Only At The Direction Of The Engineer.

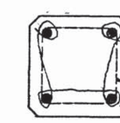

SECTION F-F

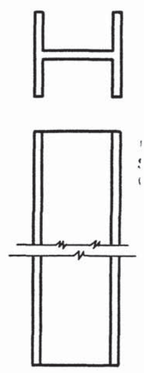

STEEL PILES

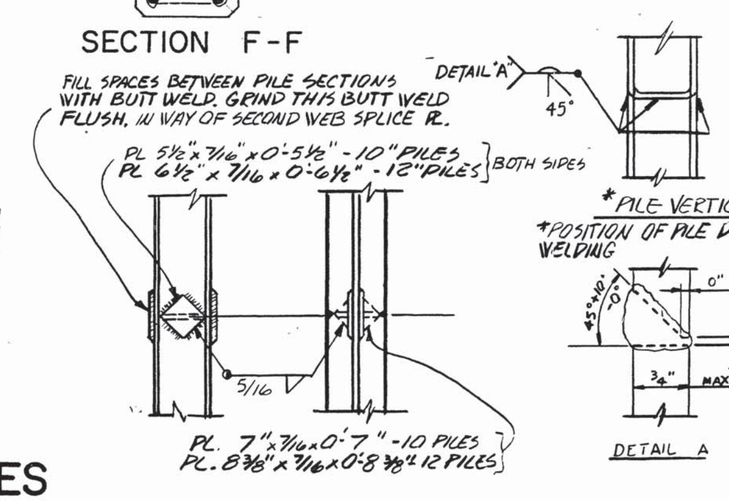

DETAIL OF PILE SPLICE

GENERAL NOTES

(1.) SPECIFICATIONS: Standard Road And Bridge Specifications Of The Tennessee Department Of Highways.

(2.) CHOICE OF PILES: To Be Specified On The Layout Sheet For Each Bridge.

(3.) CAST IN PLACE: Pile Shells Shall Have A Minimum Thickness As Follows:
1. Piles Driven Without Mandrel - 7 Gage.
2. Piles Driven With Mandrel Shall Be Of Sufficient Strength And Thickness To Hold Its Original Form And Show No Sign Of Distortion After The Core Has Been Withdrawn.
3. Steel Pipe Shall Be Welded Or Seamless Steel Conforming To ASTM Designation A-252 Grade 2 Welded And Seamless Steel Pipe Piles.

Steel Cage For All Mandrel Driver Piles Will Be Required.

The Contractor Shall Maintain On The Job At All Time Prior To And During The Filling Of The Shells, A Light Suitable For Their Inspection. Improperly Driven, Broken Or Otherwise Defective Shells Shall Be Removed And Replaced Or Otherwise Corrected To The Satisfaction Of The Engineer By Removal And Replacement Or The Driving Of An Additional Pile At No Extra Cost.

(4.) PRESTRESSED CONCRETE PILES: 1. Concrete Shall Have A Minimum 28 Day Strength Of 5000 PSI With A Release Strength Of 3500 PSI For 3/8"ϕ Strands.
2. Spiral Ties Shall Be Tied To Corner Strands At Intervals Adequate To Prevent Excessive Movement During Vibration. They May Be Manufactured From Stock Meeting Any Grade Of Reinforcing Steel Or Hard Drawn Wire.

(5.) PILE POINTS: All Cast In Place Piles Shall Be Equipped With A Steel Driving Point. Driving Points Shall Be Mill Welded To The Pile Shell. Driving Points May Be Either Structural Steel, Forged Steel Or Cast Steel. Steel Piles Shall Have A Square Cut End Only. No Driving Point Is Required Unless Shown On The Bridge Plans.

(6.) SPLICES: Splice Details For Cast In Place Piles Shall Be Made In Accordance With The Manufacturers Recommendations, Subject To The Approval Of The Engineer. Splice Details For Steel And Prestressed Concrete Piles Shall Be In Accordance With The Details Shown On This Sheet.

(7.) DRIVING FORMULA: Piles Shall Be Driven To A Minimum Capacity As Specified On The Layout Sheet As Determined By The Driving Formulas Stipulated In The Specifications.

(8.) MILL TEST REPORTS: Notarized Mill Test Reports Will Be Required For All Steel Piles And Cast In Place Pile Shells.

(9) WELDING SPECIFICATIONS: AWS for Bridges.

(10) STRUCTURAL STEEL: Structural Steel conforming to ASTM A-7 or ASTM A-36-62T will be acceptable.

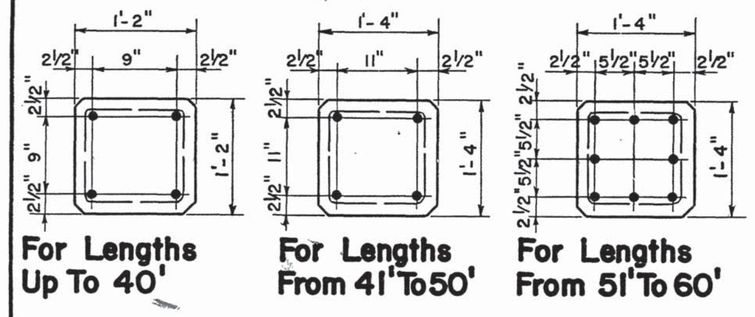

For Lengths Up To 40' | For Lengths From 41' To 50' | For Lengths From 51' To 60'

NOTE: If It Becomes Necessary To Use Size 2 Piles The Contractor Will Be Allowed An Increase In The Size 1 Bid Of 25%.

Length Of Of Pile	Longitudinal Reinforcing	Weight Of Steel Per Ft.	Weight Of Pile Per Ft.
Up To 35'	4 #7 Bars	9.6 #	205.3 #
36' To 40'	4 #8 Bars	12.2 #	205.3 #
41' To 45'	4 #9 Bars	15.1 #	265.3 #
46' To 50'	4 #10 Bars	18.8 #	265.3 #
51' To 55'	8 #9 Bars	28.9 #	265.3 #
56' To 60'	8 #10 Bars	36.2 #	265.3 #

NOTE: In Handling The Piles, They Shall Be Supported At The Points Indicated. Piles To Be Picked Up By Pulling On Both Lines Uniformly. End Of Pile Not To Touch Ground Unless Piles Inclined 1:2 Or Steeper.

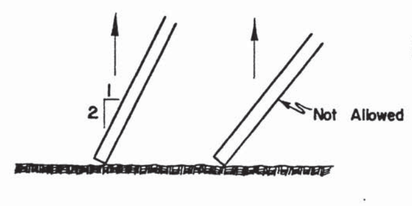

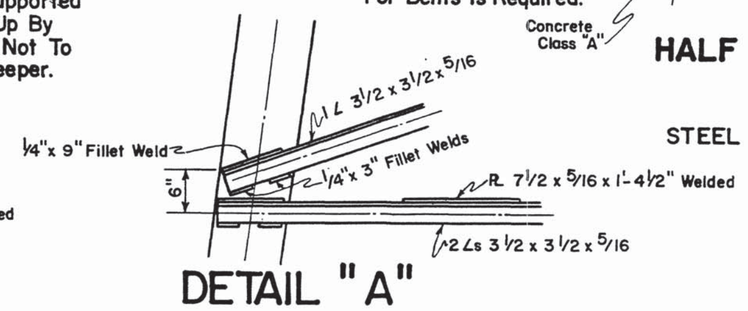

DETAIL "A"

Welds Typical For All End Joints And Intersections.

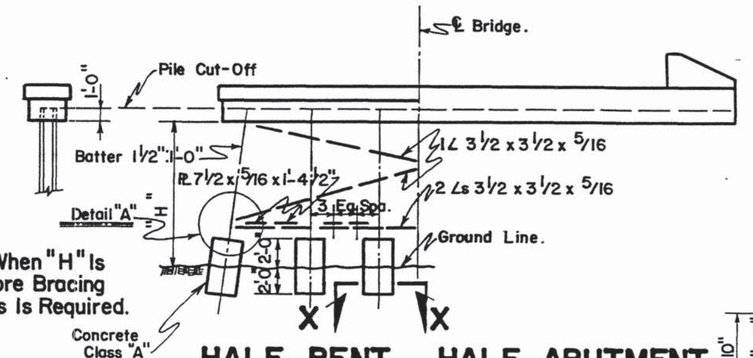

NOTE: When "H" Is 10' Or More Bracing For Bents Is Required.

HALF BENT HALF ABUTMENT

CASE I

STEEL FOR PRECAST CONCRETE

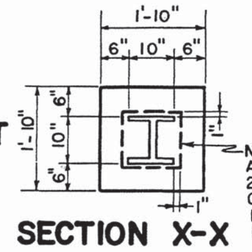

NOTE: Wrap Pile With American Welded Fabric 2"x2" No. 10 Wire. Cost of Wire Fabric to be Included in Unit Price Bid for Class "A" Concrete

SECTION X-X

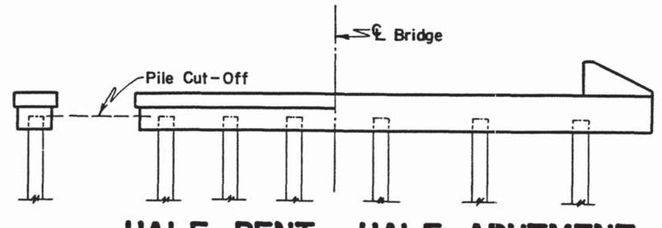

HALF BENT HALF ABUTMENT

CASE II

PRECAST CONCRETE FOR STEEL

Pile	2 Pls	4 Ls
10"	6"x 1/2"	3 1/2"x 3 1/2"x 1/2"
12"	7"x 1/2"	4"x 4"x 1/2"
14"	8"x 1/2"	5"x 5"x 1/2"

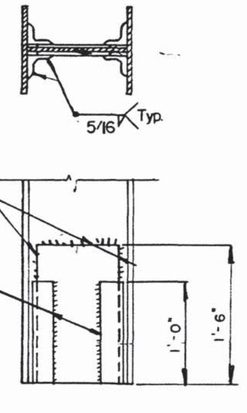

DETAIL OF PILE DRIVING POINT

NOTE Cost of driving point to be included in the unit price bid for steel piles

TYPICAL DETAILS

When The Substitution Of Steel For Precast Concrete Piles Or Precast Concrete For Steel Piles Is Permitted The Details Will Be As Shown Above. The Substitution Does Not Permit Changing The Number Of Piles In Either Case. Should The Contractor, When Permitted, Elect To Make The Substitution Of Case I, The Cost Of Encasing Blocks At Ground Lines And Bracing If Required Shall Be Included In The Price Per Lin. Ft. Of Piles.

REV. - FEB. 6, 1962	REV. - JULY 25, 1960
REV. - MAR. 1, 1961 BATTER ON PRESTRESSED PILE	REV. - DEC. 14, 1964 SPIRAL TIES
REV. - DEC. 8, 1960	REV. - JAN. 22, 1964 COST OF WIRE FABRIC
REV. - OCT. 27, 1960	REV. - FEB. 24, 1966 TIMBER PILE SPLICE, DETAIL OF PILE DRIVING POINT
REV. - SEPT. 27, 1960 DELETE PILE SUBSTITUTIONS	REV. - NOV. 27, 1973 ADDED ALT. SECTION A-A
	REV. - NOV. 12, 1982 DETAIL OF PILE SPLICE

DESIGNED BY _____ DATE _____
DRAWN BY J.W. SOUTHERLAND DATE 5-27-60
RETRACED BY JOE B. CANTRELL JR. DATE 2-6-62
CHECKED BY _____ DATE _____

STATE OF TENNESSEE
DEPARTMENT OF HIGHWAYS
NASHVILLE

STANDARD PILE DETAILS

VOID

CORRECT Fred Green BRIDGE ENGINEER

APPROVED Earl D. Long STATE HIGHWAY ENGINEER

H-5-III

SEE Std.-5-1 & 5-2