STEL1124F.DGN

CONST. NO. 79011-3266-94

PROJECT NO.	YEAR	SHEET NO.
BR-STP-1(283)	2015	

REVISIONS

NO.	DATE	BY	BRIEF DESCRIPTION

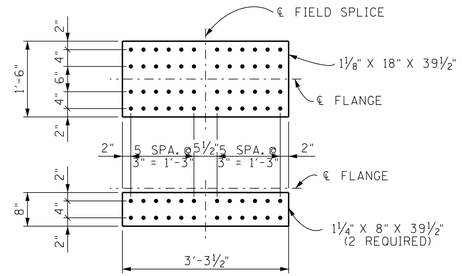

PLAN OF TOP FLANGE SPLICE PLATES

FIELD SPLICE NO'S. 3 AND 4

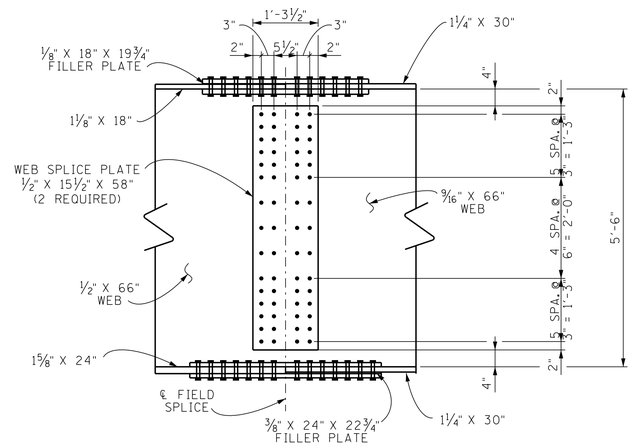

ELEVATION OF WEB SPLICE PLATE

FIELD SPLICE NO'S. 3 AND 4

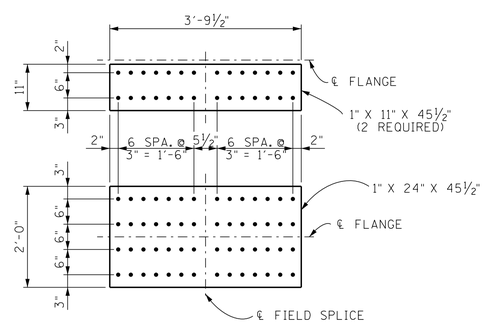

PLAN OF BOTTOM FLANGE SPLICE PLATES

FIELD SPLICE NO'S. 3 AND 4

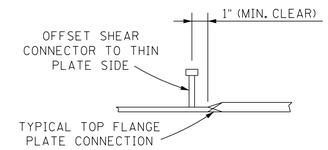

TYPICAL SHEAR CONNECTOR OFFSET

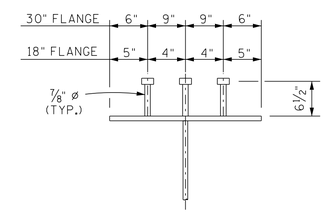

SHEAR CONNECTOR DETAIL

NOTE: SHEAR CONNECTOR MATERIAL TO BE ASTM A108.

STATE OF TENNESSEE
DEPARTMENT OF TRANSPORTATION

SUPERSTRUCTURE DETAILS
STATE ROUTE 1
OVER
LOOSAHATCHIE RIVER
STATION 1197+55.00
SHELBY COUNTY
2015

CABRINA M. DIETERS
REGISTERED ENGINEER
No. 115777
05-01-2015
STATE OF TENNESSEE

CORRECT Dwayne G. Segers
ENGINEER OF STRUCTURES

DESIGNED BY	ADAM PRICE	DATE	1-14
DRAWN BY	T.R. KIRK	DATE	12-14
SUPERVISED BY	FIELDS & DIETERS	DATE	12-14
CHECKED BY	ADAM PRICE	DATE	3-15

U-56-126