PC1124F.DGN

CONST. NO. 79011-3266-94

PROJECT NO.	YEAR	SHEET NO.
BR-STP-1(283)	2015	

REVISIONS

NO.	DATE	BY	BRIEF DESCRIPTION

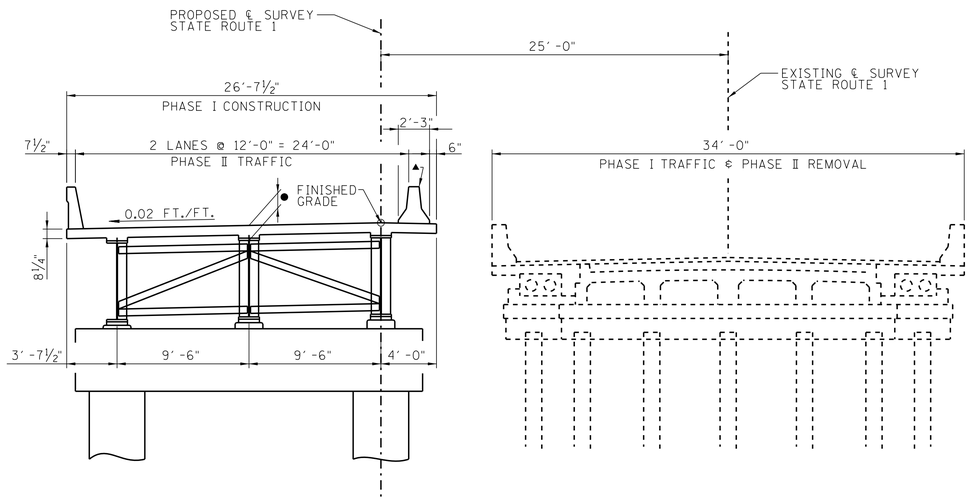

TRAFFIC PHASING DETAIL

(EXISTING APPROACH SPANS)
(LOOKING FORWARD ON SURVEY)

DASHED LINES INDICATE EXISTING BRIDGE.

●DENOTES: 1′-0¾" TOP OF SLAB TO TOP OF WEB (TYP.)

▲DENOTES: INTERCONNECTED PORTABLE BARRIER RAIL, SEE STD. DWG. STD-2-1 & 2.

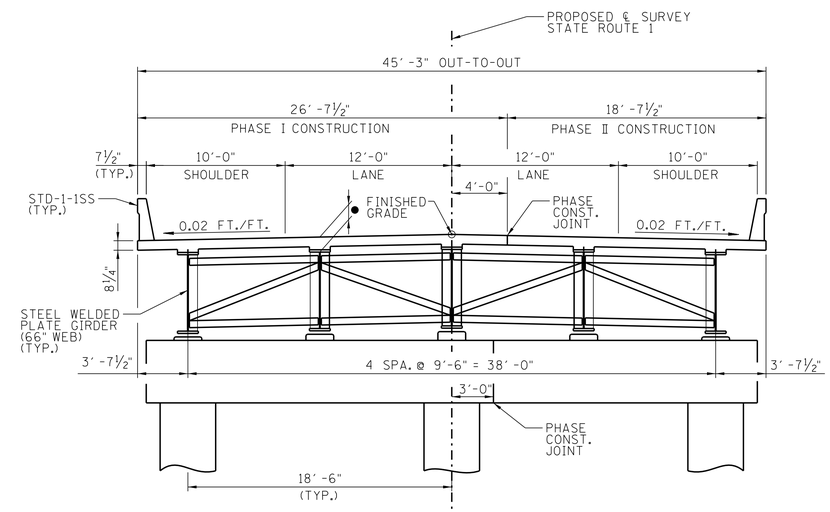

TYPICAL CROSS-SECTION

(LOOKING FORWARD ON SURVEY)

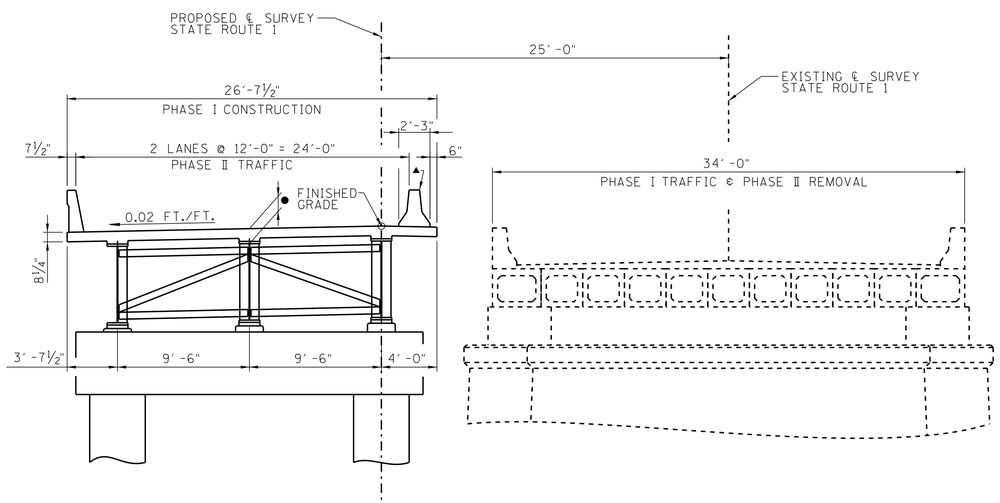

TRAFFIC PHASING DETAIL

(EXISTING MAIN SPAN)
(LOOKING FORWARD ON SURVEY)

STATE OF TENNESSEE
DEPARTMENT OF TRANSPORTATION

PHASE CONSTRUCTION DETAILS
STATE ROUTE 1
OVER
LOOSAHATCHIE RIVER
STATION 1197+55.00
SHELBY COUNTY
2015

CORRECT Wayne A. Sieper
ENGINEER OF STRUCTURES

U-56-110

DESIGNED BY	ADAM PRICE	DATE	01-14
DRAWN BY	G. W. KORNIKOSKI	DATE	12-14
SUPERVISED BY	J.W.F./C.M.D.	DATE	12-14
CHECKED BY	ADAM PRICE	DATE	04-15