GN1124F.DGN

CONST. NO. 79011-3266-94

PROJECT NO.	YEAR	SHEET NO.
BR-STP-1(283)	2015	

REVISIONS

NO.	DATE	BY	BRIEF DESCRIPTION

ESTIMATED QUANTITIES

	ITEM NO.	DESCRIPTION	UNIT	TOTAL	SUPERSTRUCTURE	ABUTMENT NO. 1	BENT NO. 1	BENT NO. 2	BENT NO. 3	ABUTMENT NO. 2
2	202-04.01	REMOVAL OF STRUCTURES (EXISTING BRIDGE NO. 79-SR001-30.36)	L.S.	1						
3	204-02.01	DRY EXCAVATION (BRIDGES)	C.Y.	2,318		136	626	710	710	136
	204-03.01	WET EXCAVATION	C.Y.	594			198	198	198	
	204-10.01	FOUNDATION PREPARATION (BENT NO. 1, STA. 1195+55.00)	L.S.	1			1			
	204-10.02	FOUNDATION PREPARATION (BENT NO. 2, STA. 1197+55.00)	L.S.	1				1		
	204-10.03	FOUNDATION PREPARATION (BENT NO. 3, STA. 1199+55.00)	L.S.	1					1	
9	303-01.02	GRANULAR BACKFILL (BRIDGES)	TON	38		19				19
5	602-04.01	STEEL STRUCTURES (WELDED PLATE GIRDER, 66" WEB)	L.S.	1						
	604-02.03	EPOXY COATED REINFORCING STEEL	LB.	353,626	349,762	1,932				1,932
	604-03.01	CLASS A CONCRETE (BRIDGES)	C.Y.	854		84	229	229	228	84
	604-03.02	STEEL BAR REINFORCEMENT (BRIDGES)	LB.	145,413		8,481	42,883	42,907	42,661	8,481
1	604-03.04	PAVEMENT AT BRIDGE ENDS	S.Y.	225						
	604-03.09	CLASS D CONCRETE (BRIDGE DECK)	C.Y.	898	898					
	604-04.01	APPLIED TEXTURE FINISH (NEW STRUCTURES)	S.Y.	2,168						
	604-05.31	BRIDGE DECK GROOVING (MECHANICAL)	S.Y.	3,484						
4 7	604-11.01	EXPANSION DEVICE (STRIP SEAL, 4" MOVEMENT)	L.F.	90		45				45
	606-09.01	TEST PILES (PRECAST CONCRETE, SIZE 1)	L.F.	160		35	35	25	25	40
	606-09.02	LOADING TEST (PRECAST CONCRETE, SIZE 1)	EA.	1		1				
	606-09.03	PRECAST CONCRETE PILES (SIZE 1)	L.F.	5,115		450	1,875	1,125	1,125	540
8	606-12.01	PILE ANCHORAGE SYSTEM (SEISMIC)	EA.	263		19	75	75	75	19
	620-05.01	CONCRETE PARAPET SINGLE SLOPE (STD-1-1SS)	L.F.	1,522						
6	710-09.01	6" PERFORATED PIPE WITH VERTICAL DRAIN SYSTEM	L.F.	152		76				76
	710-09.02	6" PIPE UNDERDRAIN	L.F.	52		26				26
	712-12.47	BRIDGE MOUNTED INTERCONNECTED PORTABLE BARRIER RAIL	L.F.	768						
10	920-10.04	COLUMN ENCASEMENT	EA.	9			3	3	3	

1 NOTE: PRIOR TO CONSTRUCTION OF THE PAVEMENT AT BRIDGE ENDS, THE CONTRACTOR SHALL SUBMIT A PROPOSED BILL OF STEEL TO THE ENGINEER FOR APPROVAL.

2 LUMP SUM: EXISTING BRIDGE NO. 79-SR001-30.36 CONSISTS OF 22 SPANS CONCRETE DECK GIRDERS AND 1 SPAN PRECAST CONCRETE BOX BEAMS WITH CONCRETE SUBSTRUCTURES. LENGTH = 682'-0". WIDTH = 34'-0".

3 NOTE: EXCAVATION BASED ON FINAL PROFILE AT ABUTMENTS AND BENTS.

4 NOTE: THE PRICE BID FOR ROADWAY EXPANSION DEVICES TO INCLUDE THE COST OF 74 S.Y. OF CONCRETE SEAL REQUIRED. SEE GENERAL NOTES FOR DESCRIPTION OF CONCRETE SEAL.

5 NOTE: LUMP SUM: TOTAL ESTIMATED WEIGHT OF 1,646,772 LB. OF STRUCTURAL STEEL INCLUDES GIRDER BEARING DEVICES, GIRDERS, FIELD SPLICES, SHEAR CONNECTORS, BOLTS, TAB CONNECTOR PLATES, STIFFENERS, AND CROSS-FRAMES. ALSO SEE TENNESSEE STANDARD SPECIFICATIONS SECTION 602.49 AND 602.50.

6 NOTE: COST OF POLYETHYLENE SHEETING AND ALL MISCELLANEOUS ITEMS NECESSARY FOR INSTALLATION TO BE INCLUDED IN THE UNIT PRICE BID FOR PERFORATED PIPE.

7 NOTE: THE EXPANSION JOINT AT ABUTMENT NO. 1 AND ABUTMENT NO. 2 SHALL BE IN ACCORDANCE WITH SECTION 623.03 OF THE STANDARD SPECIFICATIONS. THE TOTAL REQUIRED MOVEMENT IS 4 INCHES. SHOP DRAWINGS SHALL BE SUBMITTED TO THE ENGINEER OF STRUCTURES FOR APPROVAL.

8 NOTE: COST OF PREPARATION OF THE TOP OF PILE FOR SEISMIC REQUIREMENTS SHALL BE INCLUDED IN THE UNIT PRICE BID FOR ITEM NO. 606-12.01. SEE STANDARD DRAWING STD-6-1 FOR DETAILS. THE PILE AND TEST PILE LENGTHS SHOWN ON THE PLANS DO NOT INCLUDE THE 2 FEET REQUIRED FOR SEISMIC ATTACHMENT.

9 GRANULAR BACKFILL SHALL BE CLASS "A" GRADING "D" MATERIAL. SEE STANDARD DRAWING STD-10-1.

10 NOTE: THE PRICE BID FOR COLUMN ENCASEMENT SHALL INCLUDE THE COST OF STEEL REINFORCED HIGH DENSITY POLYETHYLENE PIPE, WATER ACTIVATED FLEXIBLE POLYURETHANE FOAM INJECTION RESIN, AND ALL MISCELLANEOUS ITEMS NECESSARY FOR INSTALLATION.

11 NOTE: THE COST OF BITUMINOUS-FIBERBOARD AND ALL MISCELLANEOUS JOINT MATERIAL TO BE INCLUDED IN THE UNIT PRICE BID FOR OTHER ITEMS.

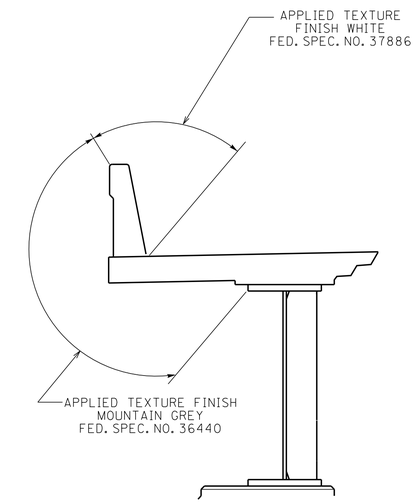

APPLIED TEXTURE FINISH SKETCH

NOTE: IN addition TO THE SURFACES SHOWN IN THE APPLIED TEXTURE FINISH SKETCH, ALL EXPOSED SURFACES OF THE WINGWALLS, ABUTMENT BEAMS, BENTS, AND EXTERIOR PORTIONS OF ENDWALLS ARE TO RECEIVE AN APPLIED TEXTURE FINISH (MOUNTAIN GREY, FED. SPEC. NO. 36440).

PILE DATA TABLE

LOCATION	DESIGN LOAD (TONS)	PILE CUT-OFF ELEV.	EST. PILE LENGTH (FT)	TEST PILE LENGTH (FT)	MIN. PILE TIP ELEV.
ABUT. NO. 1	100	267.74	25	35	N/A
ABUT. NO. 2	100	266.55	30	40	249.00
BENT NO. 1	120	241.50	25	35	N/A
BENT NO. 2	120	241.50	15	25	N/A
BENT NO. 3	120	241.50	15	25	N/A

STATE OF TENNESSEE
DEPARTMENT OF TRANSPORTATION

ESTIMATED QUANTITIES
STATE ROUTE 1
OVER
LOOSAHATCHIE RIVER
STATION 1197+55.00
SHELBY COUNTY
2015

CARMINA M. DIETERS
REGISTERED ENGINEER
No. 112777
STATE OF TENNESSEE
08/07/2015

DESIGNED BY ADAM PRICE DATE 06-14
DRAWN BY CHRIS STAPLER DATE 02-15
SUPERVISED BY C.M.D./J.W.F. DATE 02-15
CHECKED BY ADAM PRICE DATE 04-15

CORRECT Wayne J. Sieg
ENGINEER OF STRUCTURES

U-56-107