BP1124F.DGN

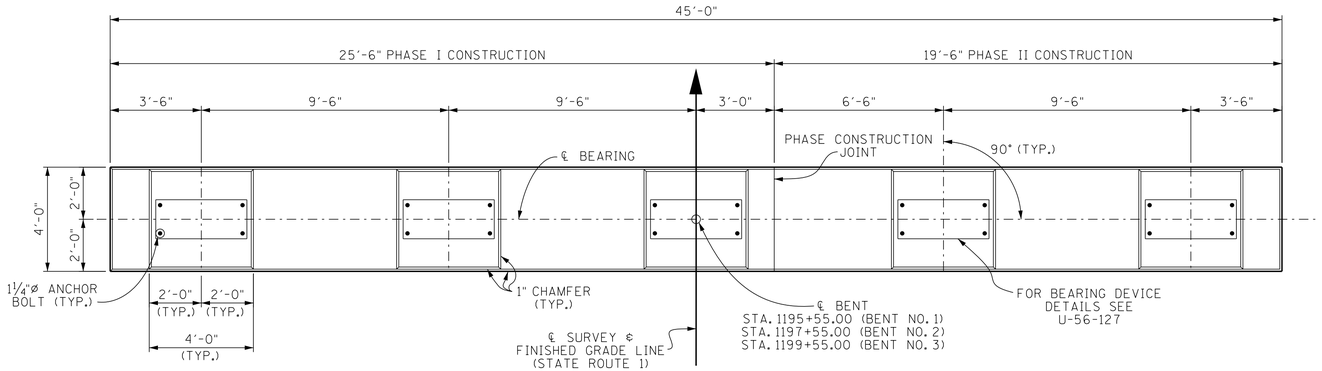

PLAN

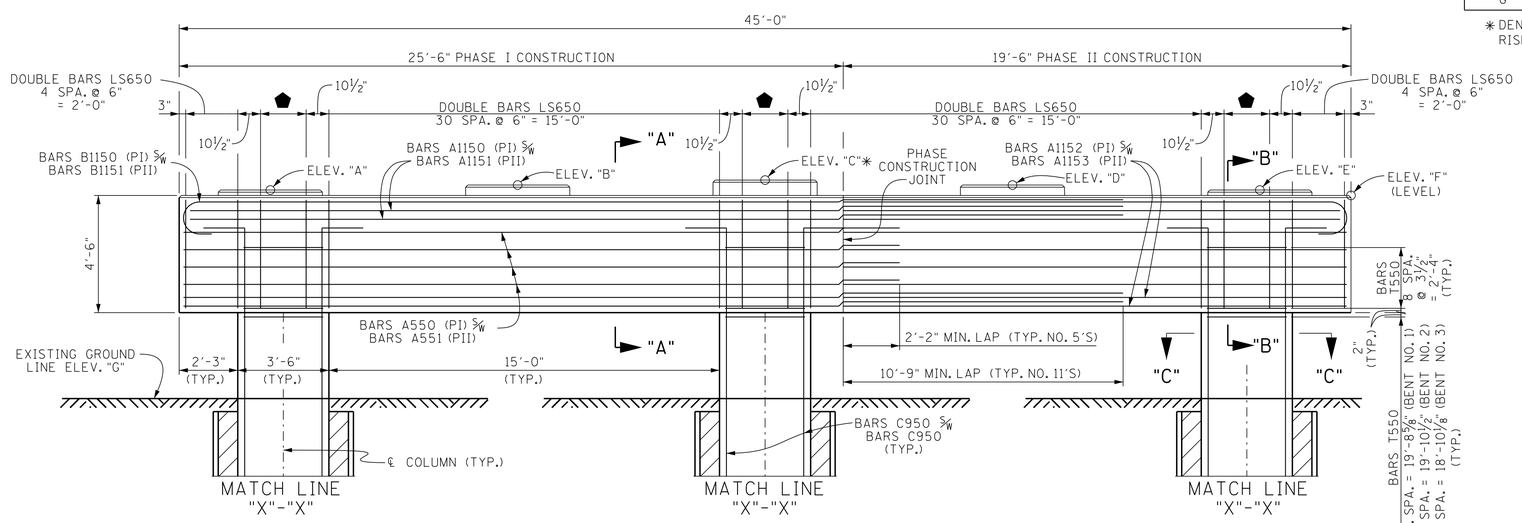

ELEVATION

(LOOKING FORWARD ON SURVEY)

DENOTES: BARS H650 2 SPA. @ 10½" = 1'-9"

PI DENOTES: PHASE I
PII DENOTES: PHASE II

NOTES:

NOTE: WHEN POURING CAP BEAM, PROVISIONS SHALL BE MADE FOR SETTING ANCHOR BOLTS. BOLT PROJECTION 6".

NOTE: RISER BLOCKS TO BE POURED MONOLITHICALLY WITH CAP BEAM.

COLUMN STEEL TO EXTEND 3'-3" INTO CAP BEAM.

NOTE: FOR SECTION "A"-"A", "B"-"B", "C"-"C", AND PLAN OF FOOTING SEE DWG NO. U-56-138.

NOTE: RISER BLOCK SURFACES SHALL BE LEVEL.

NOTE: SEE STANDARD DRAWING STD-6-1 FOR PILE DETAILS AND NOTES.

TABLE OF ELEVATIONS			
POINT	BENT NO. 1	BENT NO. 2	BENT NO. 3
"A"	270.76	270.92	269.89
"B"	270.95	271.11	270.08
"C"	271.14✱	271.30✱	270.27✱
"D"	270.95	271.11	270.08
"E"	270.76	270.92	269.89
"F"	270.55	270.71	269.68
"G"	268.00	267.50	267.00

✱ DENOTES: RISER BLOCK TO BE REINFORCED. SEE RISER BLOCK REINFORCING DETAIL ON THIS SHEET.

CONST. NO. 79011-3266-94

PROJECT NO.	YEAR	SHEET NO.
BR-STP-1(283)	2015	

REVISIONS

NO.	DATE	BY	BRIEF DESCRIPTION

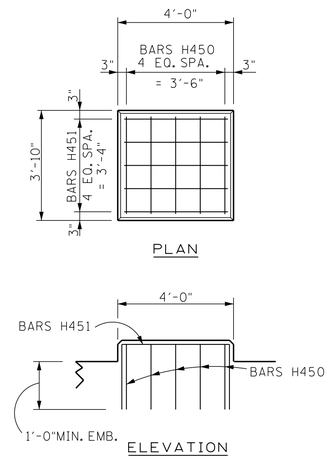

RISER BLOCK REINFORCING DETAIL

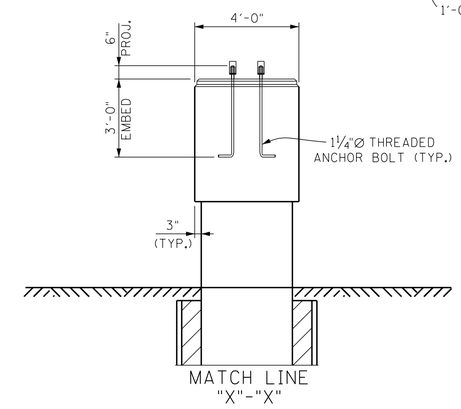

END ELEVATION

ESTIMATED QUANTITIES BENTS		
	CLASS "A" CONCRETE (BRIDGES) C.Y.	STEEL BAR REINFORCEMENT (BRIDGES) LB.
BENT NO. 1	229	42,883
BENT NO. 2	229	42,907
BENT NO. 3	228	42,661

STATE OF TENNESSEE
DEPARTMENT OF TRANSPORTATION
BENT NOS. 1, 2 & 3
STATE ROUTE 1
OVER
LOOSAHATCHIE RIVER
STATION 1197+55.00
SHELBY COUNTY
2015

CORRECT Wayne G. Sieger
ENGINEER OF STRUCTURES

U-56-136

DESIGNED BY ADAM PRICE DATE 06-14
DRAWN BY CHRIS STAPLER DATE 01-15
SUPERVISED BY C.M.D./J.W.F. DATE 01-15
CHECKED BY ADAM PRICE DATE 04-15