FED. ROAD DIST. NO.	STATE	FED. AID PROJ. NO.	FISCAL YEAR	SHEET NO.	TOTAL SHEETS
3	TENN.		19	24	124

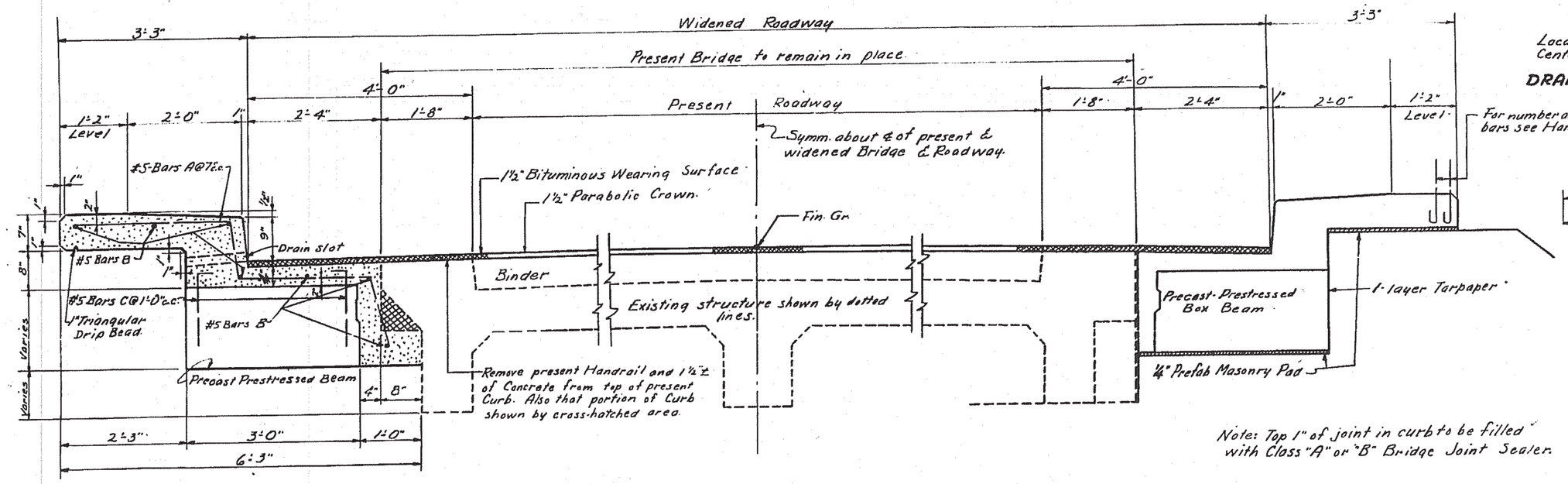

HALF SECTION A-A

HALF END ELEVATION
Abutment End

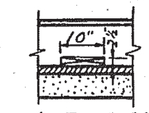

Locate Drain Slots @ Center of every other Railing.

DRAINAGE SLOT DETAIL

For number and location of these bars see Handrail Details.

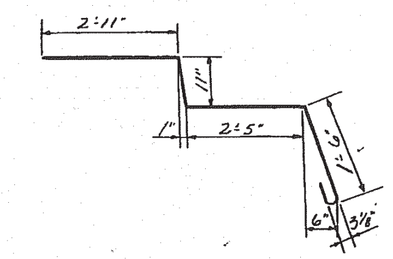

BARS A-75° SKEW

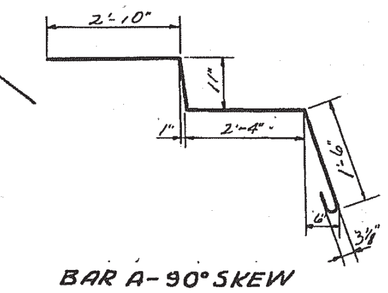

BAR A-90° SKEW

Note: Top 1" of joint in curb to be filled with Class "A" or "B" Bridge Joint Sealer.

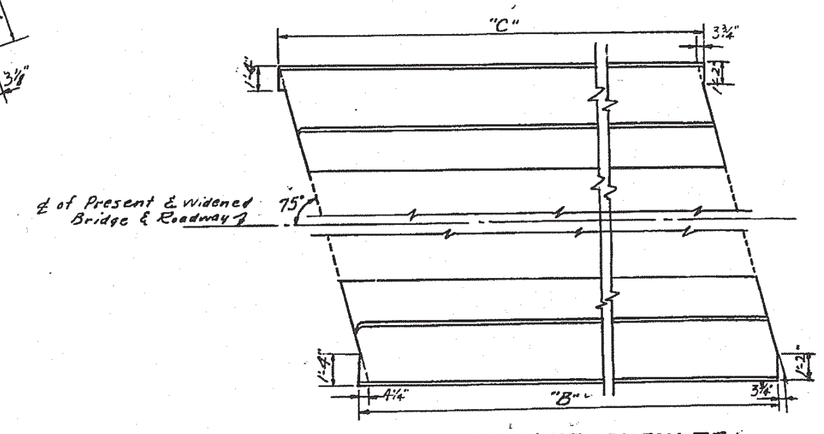

PLAN 75° SKEW RT.
End Span.
Reinf. Steel & Details not shown same as for 75° Skew Lt.

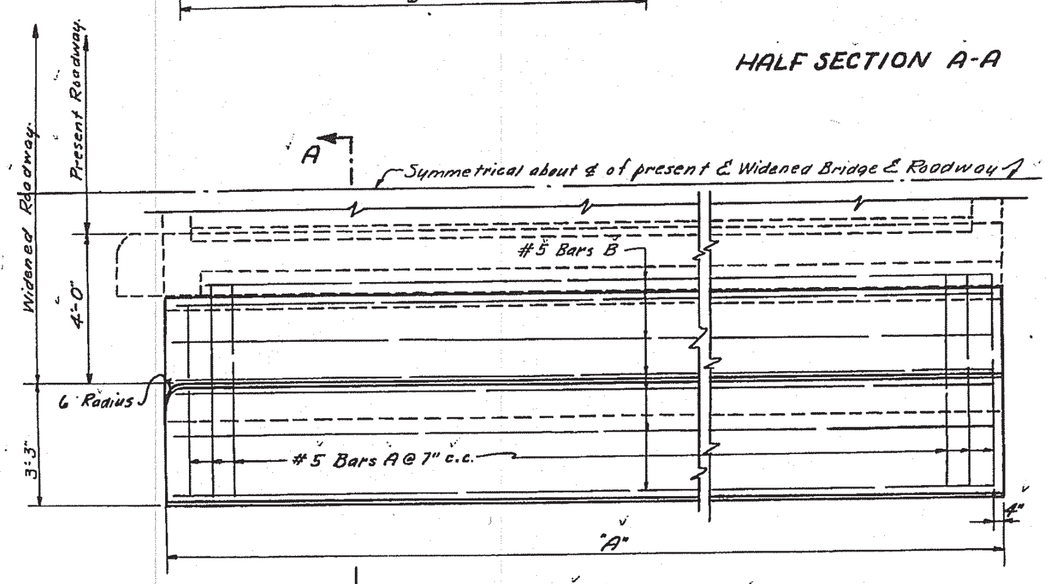

HALF PLAN 90° SKEW

Abut. End — Pier or Bent End

Note: Place a 1" Bituminous Fiber Joint between Spans.

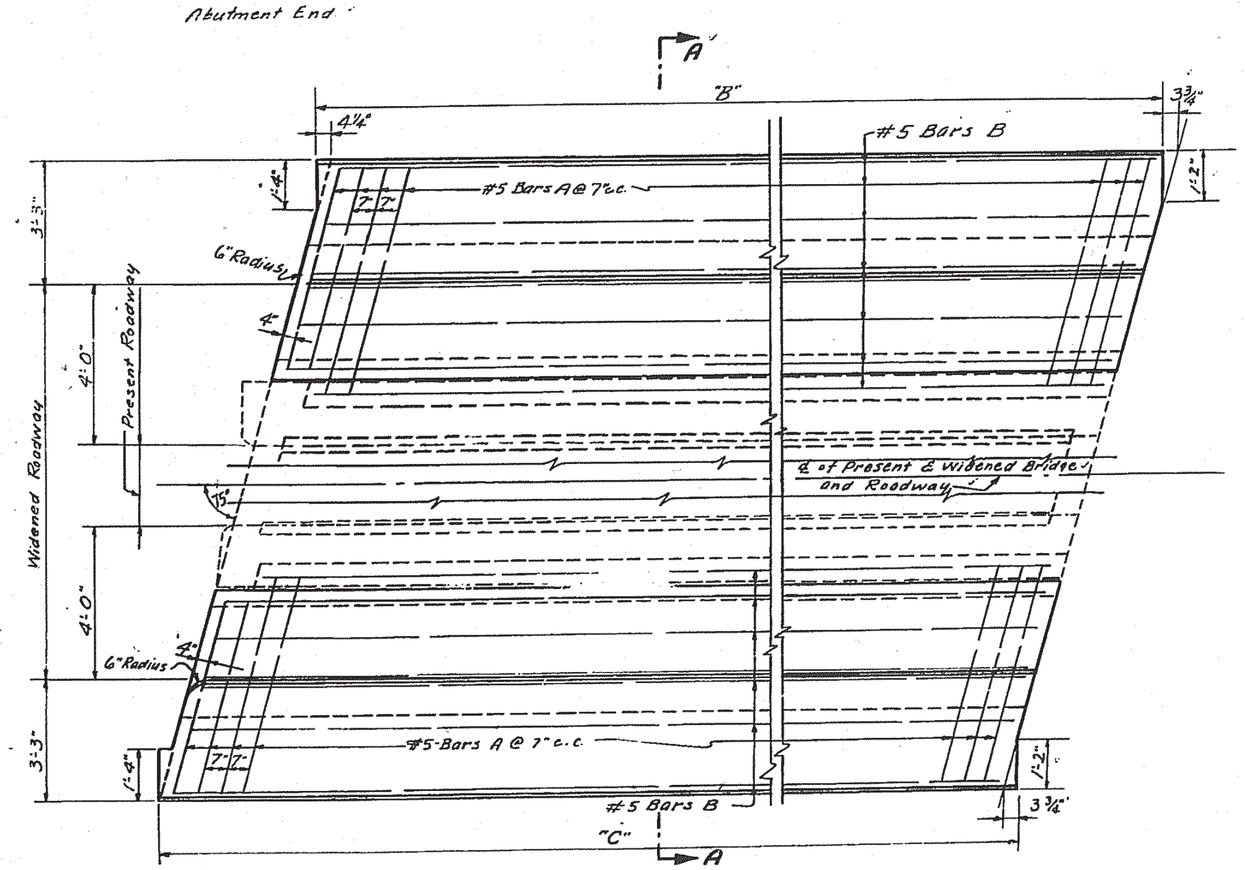

Abut. End — Pier or Bent End

PLAN 75° SKEW-Lt.
END SPAN

GENERAL NOTES:

SPECIFICATIONS: Standard Road & Bridge Specifications of the Tennessee Department of Highways.

LOADING: H20-S16-44.

CONCRETE: (Cast in place) To be Class "A".

REINFORCING STEEL: To be Intermediate or Hard Grade.

FORMS & FINISH: See Specifications.

JOINT SEALER: Class "A" or "B" Bridge Joint Sealer See Special Provisions.

DESIGN: AASHO Specifications 1961.

BILL OF STEEL & ESTIMATED QUANTITIES
90° SKEW- ONE SPAN

Clear Span Ft.	Bars A #5 x 8'-1" No.	Bars B. 14-#5 Length	Concrete Class "A" Cu. Yds. End Span	Concrete Class "A" Cu. Yds. Int. Span	Reinf. Steel Lbs.
20	76	22'-0"	7.4	7.5	962
22	84	24'-0"	8.1	8.2	1059
24	90	26'-0"	8.7	8.8	1139
26	98	28'-0"	9.4	9.5	1235
28	106	30'-6"	10.2	10.3	1339
30	112	32'-6"	10.9	11.0	1419
32	120	34'-6"	12.5	12.6	1516
34	126	36'-6"	13.2	13.3	1596
36	134	38'-6"	13.9	14.0	1692
38	140	40'-6"	16.2	16.3	1772
40	146	42'-6"	17.0	17.1	1852

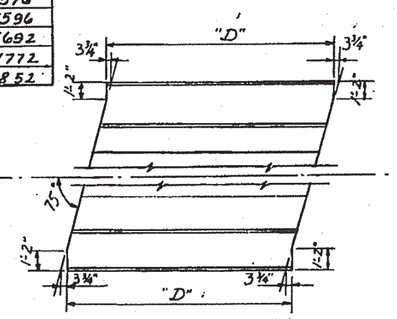

PLAN-75° SKEW Lt.
Intermediate Span

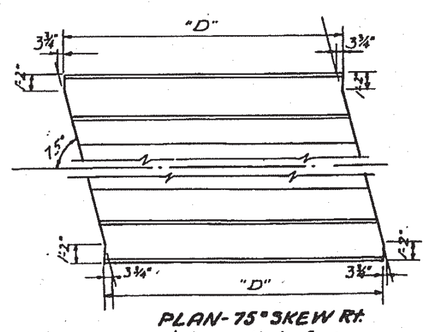

PLAN-75° SKEW Rt.
Intermediate Span

Note: Reinf. Steel & Details not shown same as for End Span, 75° SKEW- Lt.

BILL OF STEEL & ESTIMATED QUANTITIES
75° SKEW- ONE SPAN

Clear Span Ft.	Bars A #5 x 8'-3" No.	Bars B 14-#5 Length	Concrete Class "A" Cu. Yds End Span	Concrete Class "A" Cu. Yds Int. Span	Reinf. Steel Lbs.
20	76	22'-0"	7.4	7.5	975
22	84	24'-0"	8.1	8.2	1073
24	90	26'-0"	8.7	8.8	1154
26	98	28'-0"	9.4	9.5	1252
28	106	30'-6"	10.3	10.3	1357
30	112	32'-6"	10.9	11.0	1439
32	120	34'-6"	12.6	12.6	1537
34	126	36'-6"	13.3	13.4	1617
36	134	38'-6"	14.0	14.1	1715
38	140	40'-6"	16.2	16.3	1797
40	146	42'-6"	17.0	17.1	1877

STATE OF TENNESSEE
DEPARTMENT OF HIGHWAYS
NASHVILLE

STANDARD
SLAB PLAN
8'-0" WIDENING
SKEWS 90° & 75°
SPANS 20' TO 40'
OPEN TYPE ABUTMENTS
1962

CORRECT: Fred Greene — BRIDGE ENGINEER
APPROVED: [signature] — STATE HIGHWAY ENGINEER

WITH OKAS. K. 18-66

Revised 7-6-66 Joint Sealer
Tracing Chk. 11-13-62

DESIGNED BY		DATE	
DRAWN BY	E. L. Owen	DATE	10-25-62
TRACED BY	A. Kelley	DATE	11-5-62
CHECKED BY	U.G. Emge	DATE	10-31-62