FED. ROAD DIST. NO.	STATE	FED. AID PROJ. NO.	FISCAL YEAR	SHEET NO.	TOTAL SHEETS
3	TENN.		19		

PRINTED B.P.R. 3-28-67

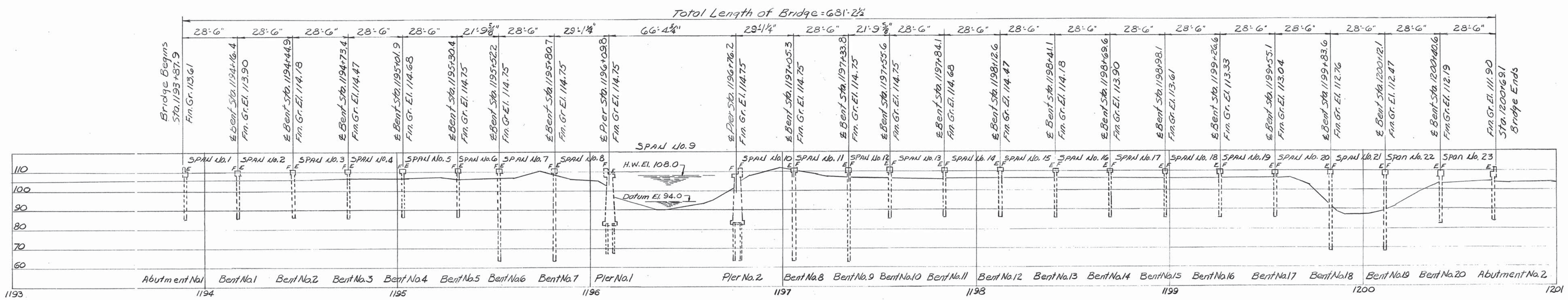

SECTION ALONG ℄ PRESENT & WIDENED BRIDGE & ROADWAY
Scale: 1" = 30'-0"

Note: E = Expansion End
F = Fixed End

Note: New Finished Grade is 6" above present finished grade.

Note: Fill of the ends of the bridge are to be in place and thoroughly compacted before driving abutment piles.

Note: One lane of traffic to be kept open at all times.

Note:
The Contractor shall have the Division Office of the State Highway Department check proposed length of the beams, in the field, before beams are fabricated.

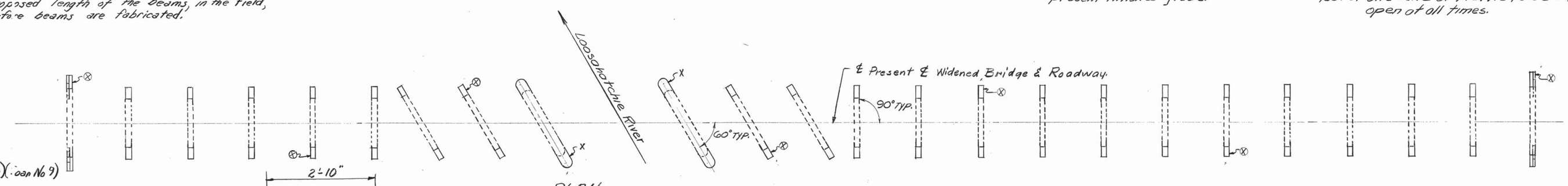

PLAN
⊗ Denotes Concrete test pile.
X Denotes timber test pile.

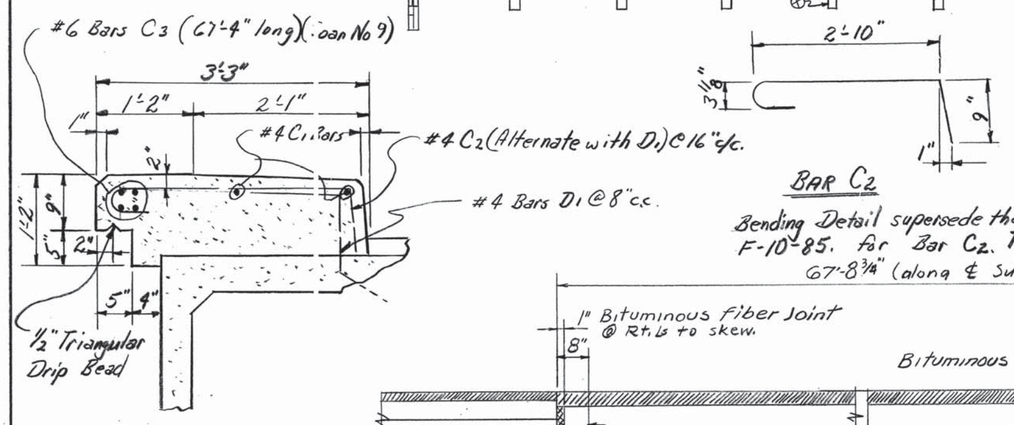

CURB DETAIL
This detail supersede that of Std. Dwg. F-10-84 & 85.

BAR C2
Bending Detail supersede that of Dwg. F-10-85. for Bar C2. Total Length = 4'-6"
67'-8¾" (along ℄ Survey)

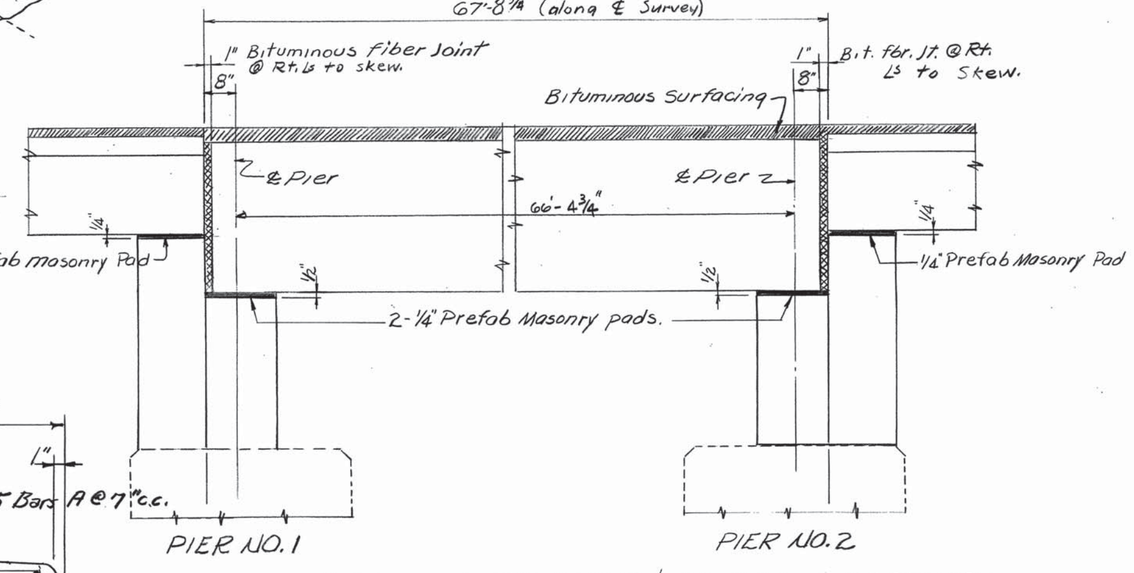

ELEVATION PARALLEL TO ℄ BRIDGE & ROADWAY
Showing masonry bearing pads and bituminous fiber joints.

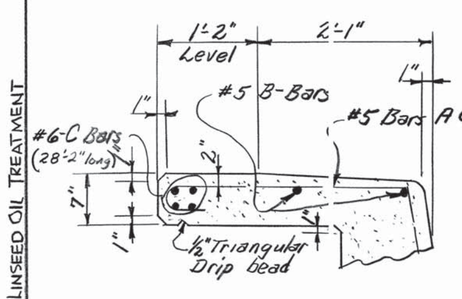

CURB DETAIL
This detail supersedes that of Std. Dwgs K-15-66-67-68 & 73.

TABLE OF PRESTRESSED CONCRETE BOX BEAMS

Span No.	Clear Span	No.	Type	Size	L	X	X1
1-5 & 13-23	26'-0"	32	A	17" x 36" x 28'-5"	28'-5"	—	—
GRT. & 12LT.	28'-0"	2	D	17" x 36" x 29'-6"	28'-7¾"	1'-8¾"	—
7, 8, 10 & 11	26'-0"	8	B	17" x 36" x 28'-5"	28'-5"	1'-8¾"	1'-8¾"

ESTIMATED QUANTITIES

ITEM	⊙ Concrete Class "A" Cu. Yds.	Reinforcing Steel Lbs.	Prestressed Conc. Box Bm. 17" x 36" x L" * No.	** Prestressed Conc. Box Bm. 17" x 36" x 13'-11½" No.	Prestressed Conc. Box Bm. 33" x 36" x 67'-6½" No.	Concrete Test Piles Lin. Ft.	Size #1 Precast Concrete Piles *** Lin. Ft.	Timber Test Pile Lin. Ft.	Size #1 Untreated Timber Piles Lin. Ft.	METAL BRIDGERAIL Lin. Ft.	LINSEED OIL TREATMENT SQ. YDS.
BRIDGERAIL										1343	660
16 @ 26'-0" Cl. 90° Sk. Span	151.8	23,821									
4 @ 26'-0" Cl. 60° Sk. Span	38.0	6,987									
2 @ 21'-9⅜" Special 60° 30" Sk.	14.8	2,083									
1 @ 66'-4¾" Span	15.2	9,00									
Abutment No. 1	4.1	403									
Bent No. 1	2.7	303									
Bent No. 2	2.7	303									
Bent No. 3	2.7	303									
Bent No. 4	2.7	303									
Bent No. 5	2.7	303									
Bent No. 6	2.8	302									
Bent No. 7	2.8	302									
Pier No. 1	49.0	1,013									
Pier No. 2	49.0	1,013									
Bent No. 8	2.8	302									
Bent No. 9	2.8	302									
Bent No. 10	2.7	303									
Bent No. 11	2.7	303									
Bent No. 12	2.7	303									
Bent No. 13	2.7	303									
Bent No. 14	2.7	303									
Bent No. 15	2.7	303									
Bent No. 16	2.7	303									
Bent No. 17	2.7	303									
Bent No. 18	2.7	303									
Bent No. 19	2.7	303									
Bent No. 20	2.7	303									
Abutment No. 2	4.1	403									
Totals	380.4	41,622	42	2	11	280	1480	60	420	1343	660

NOTE: The cost of the following items to be included in the unit price bid for Class "A" concrete: removal of present handrails, parts of present curbs, parts of present Abutments and Piers as indicated, furnishing and placing expansion bolts and bituminous fiber joints.

NOTE: Bituminous surfacing is included in the Roadway Quantities.

NOTE: Cost of excavation to be included in the items bid on.

Lump Sum: For shifting of present 65' steel truss as shown on Dwg. K-43-34 and complete removal of said truss as noted in Construction Schedule. All salvageable material to remain the property of the Contractor.

⊙ Cast-in-Place
* For Number and "L" see Table of Prestressed Box Beams.
** The fabricator shall have the option of using Precast reinforced box beams as shown on Dwg. K-43-33.
*** Contractor may substitute precast prestressed concrete piles.

REQUIRED: 240 - ¾"Φ x 1'-6" Expansion Bolts.

TEST PILE NOTE
Before any Concrete piles are ordered, a Concrete test pile 40' long shall be driven in its final location in the abutments and Bents designated on this sheet. From the results obtained, Concrete piles shall be ordered of such length as to provide a minimum bearing of 20 tons for the abutments and 34 tons for the Bents. A timber test pile 30' long shall be driven in its final location in Piers 1 & 2. From the results obtained timber piles shall be ordered of such length as to provide a minimum bearing of 16 tons.

BRIDGERAIL NOTE:
BUILD BRIDGERAIL ACCORDING TO DRAWING K-38-149 OR K-38-150. USE ENDPOST AS SHOWN ON DRAWING K-38-31. DIMENSIONS AS FOLLOWS:
ALUMINUM: (LEFT & RIGHT SIDES OF BRIDGE) X = 1'-3", "L" AND "NO. SPA." TO BE CONSECUTIVELY... 17 SPA @ 7'-9½", 1 SPA. @ 7'-6¾", 28 SPA. @ 7'-9½", 1 SPA. @ 7'-1¾", & 39 SPA. @ 7'-9½".
STEEL: (LEFT & RIGHT SIDES OF BRIDGE). X = 10" @ BEGINNING OF BRIDGE. "L" AND "NO. SPA." TO BE CONSECUTIVELY... 15 SPA. @ 8'-9¼" 1 SPA. @ 7'-4¼", 28 SPA. @ 8'-10", 1 SPA. @ 6'-10½", & 39 SPA. @ 8'-10⅞".
X = 1'-5¼" @ END OF BRIDGE.

GENERAL NOTES
SPECIFICATIONS: Standard Road & Bridge specifications of the Tennessee Department of Highways.
DESIGN: A.A.S.H.O specifications 1961.
LOADING: HS20-44
CONCRETE: To be Class "A" (Cast-in-place)
REINFORCING STEEL: To be intermediate or hard grade.
PREFAB MASONRY PADS: See special provisions.
CONCRETE PILES: To be precast.
PRESTRESSED CONCRETE PILES: See special provisions.
TIMBER PILES: To be untreated timber.
JOINT SEALER: Class "A" or "B" Bridge Joint Sealer; see special provisions.
BAR DIMENSIONS: Are c.c. of bars.

LIST OF DRAWINGS — DWG. NO.
BRIDGERAIL: THIS SHEET, K-38-31 & K-38-149 OR K-38-150
Superstructure
Spans No. 1-5 & 13-23, A = 28'-6", 90° Sk. — K-15-66, 67, 68
Spans No. 7 & 11, B = 28'-6", 60° Sk. Rt. — K-15-66, 67, 73
Spans No. 8 & 10, B = 28'-5¼", 60° Sk. Rt. — K-15-66, 67, 73
Span No. 6 & 12 ..... K-15-66 & 67 & K-43-33
Span No. 9 & Const. Schedule F-10-84 & 85 & K-43-34
Abutments No. 1 & 2 — K-15-76 & K-43-35
Bents No. 1-5 & 10-20 — K-15-76 & K-43-35
Bents No. 6, 7 & 8, 9 — K-43-35
Piers No. 1 & 2 — K-43-36
Piles — H-5-111

28'-0" ROADWAY WITH SAFETY CURBS

STATE OF TENNESSEE
DEPARTMENT OF HIGHWAYS
NASHVILLE

LAYOUT OF BRIDGE WIDENING
BRIDGE OVER LOOSAHATCHIE RIVER
STA. 1193+87.9 (79-1-31.29)
SHELBY COUNTY
1964

CORRECT — Fred Greene, Bridge Engineer
APPROVED — J. B. Dunlap, State Highway Engineer

K-43-32

DESIGNED BY — DATE
DRAWN BY R. Bingham — DATE 10-2-64
CHECKED BY WJE — DATE 10-8-64

✓ REVISED: 3/31/66 BRIDGERAIL & LINSEED OIL TREATMENT