FD1124F.DGN

SR1 LOOSAHATCHIE PRELIMINARY.DGN
GEOTECHNOLOGY PROJECT NO. J020304.07

CONST. NO. 79011-3266-94

PROJECT NO.	YEAR	SHEET NO.
BR-STP-1(283)	2015	

REVISIONS

NO.	DATE	BY	BRIEF DESCRIPTION

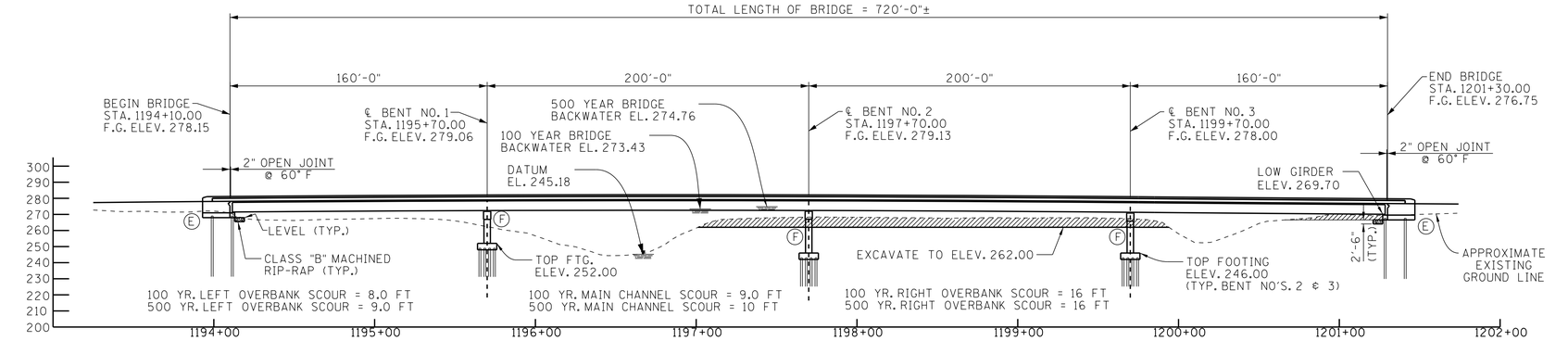

(F) DENOTES: FIXED
(E) DENOTES: EXPANSION

ELEVATION
(SCALE: 1" = 40')

DENOTES: AREA TO BE EXCAVATED AND PAID FOR UNDER ROADWAY ITEMS.

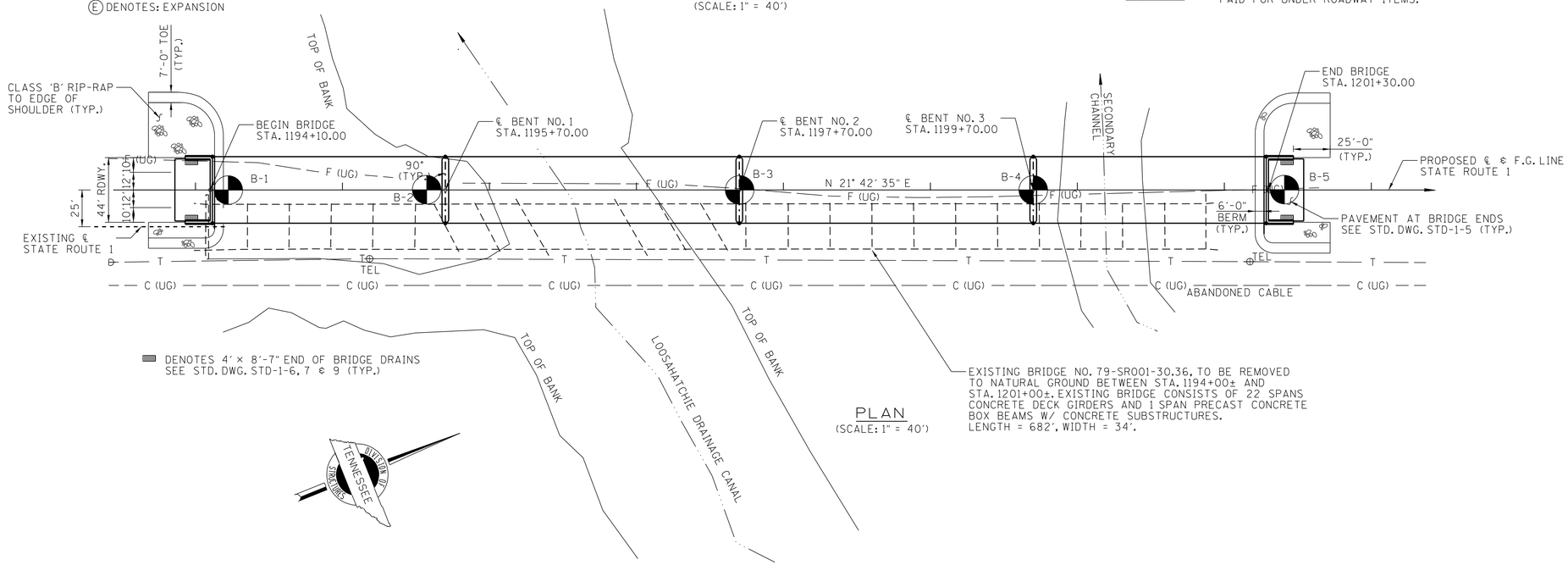

PLAN
(SCALE: 1" = 40')

REQUIRED:

1) SUFFICIENT GROUND AND CORING INFORMATION FOR BRIDGE FOUNDATIONS.
2) APPROXIMATE EXISTING GROUND LINE.

NOTES:

DESIGN SPECIFICATIONS: AASHTO LRFD 7TH EDITION 2014 WITH INTERIMS, AND THE 2011 AASHTO GUIDE SPECIFICATIONS FOR LRFD SEISMIC BRIDGE DESIGN, 2ND EDITION WITH INTERIMS. SEISMIC CATEGORY "C" WITH AS = 0.400, SDS = 0.839, SD1 = 0.359. (1000 YR. RETURN PERIOD.)

BENCHMARKS:

B.M. 5 - S14246
STA 1196+78.06, 16.90' RT.
N 376154.1621
E 883020.4901
ELEV. 278.69
USGS REFERENCE MARK ON TOP OF HANDRAIL ON UPSTREAM SIDE OF BRIDGE @ LOOSAHATCHIE RIVER.

B.M. 6 - S14247
STA 1198+81.36, 36.61' LT.
N 376362.8320
E 883045.9773
ELEV. 268.85
CPS IN SOUTH BASE OF 20" HICKORY.

XCP - S25
STA 1202+01.03, 20.16' LT.
N 376653.7391
E 883179.5138
ELEV. 272.15
ALUM DISK.

NOTE: THIS DRAWING IS FOR FOUNDATION DATA ONLY AND IS NOT TO BE USED AS A LAYOUT.

2034 ADT = 9220
44'-0" ROADWAY W/ STD-1-ISS PARAPETS
DESIGN SPEED = 55 MPH

BORING LOCATIONS*

BORING NO.	STATION	OFFSET	DEPTH	GROUND ELEV.
B-1	1194+20.00	0'	100'	270.00
B-2	1195+60.00	0'	120'	268.00
B-3	1197+70.00	0'	100'	267.50
B-4	1199+70.00	0'	100'	267.00
B-5	1201+40.00	0'	100'	274.00

*BORINGS WERE LOCATED IN THE FIELD BY REFERENCING EXISTING SITE FEATURES

STATE OF TENNESSEE
DEPARTMENT OF TRANSPORTATION

FOUNDATION LAYOUT
STATE ROUTE 1
OVER
LOOSAHATCHIE RIVER
BRIDGE I.D. NO. 79SR0010039
STATION 1197+55.00
SHELBY COUNTY
2015

DESIGNED BY	D. SHIKE	DATE	01-14
DRAWN BY	D. SHIKE	DATE	01-14
SUPERVISED BY	KDM (JKZ)	DATE	01-14
CHECKED BY	ADAM PRICE	DATE	04-15

CORRECT Wayne G. Sieger
ENGINEER OF STRUCTURES

U-56-108