FED. ROAD DIV. NO.	STATE	FED. AID PROJ. NO.	FISCAL YEAR	SHEET NO.	TOTAL SHEETS
3	TENN.		19	31	173

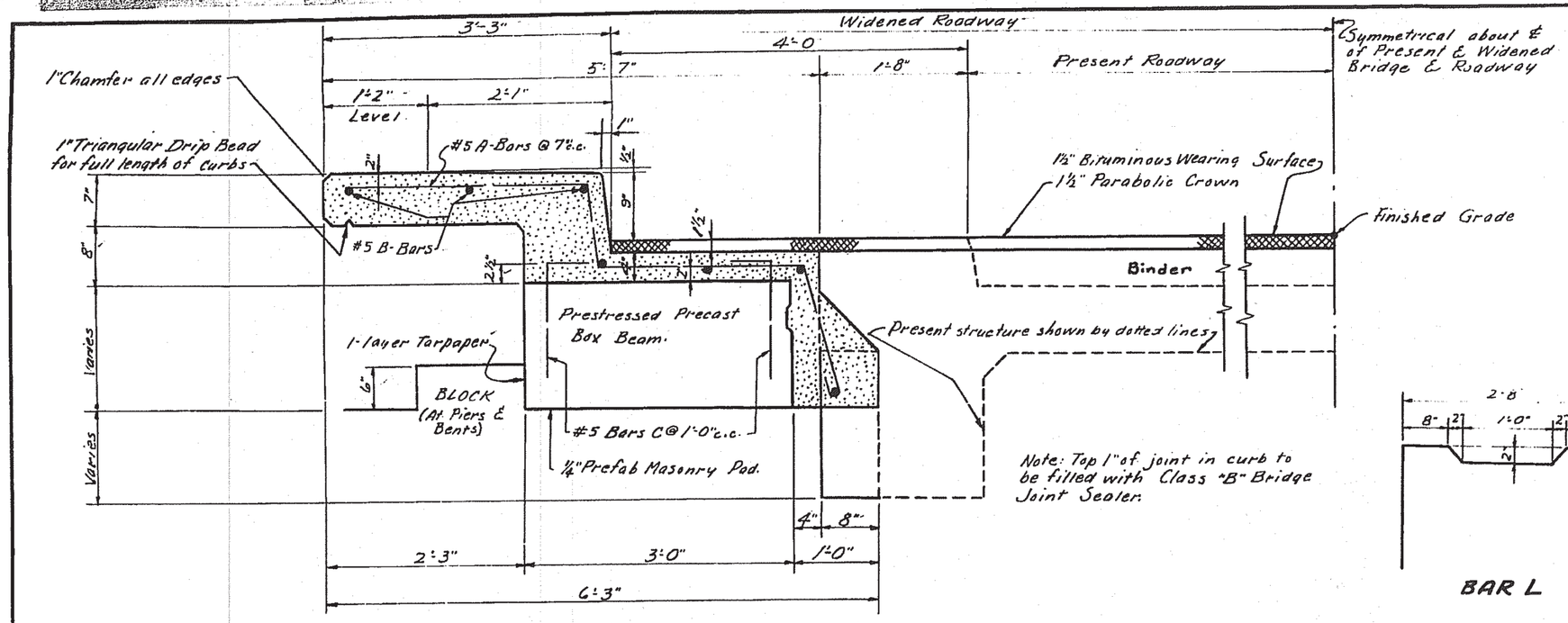

PART SECTION

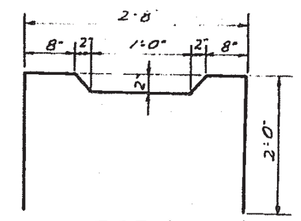

BAR L

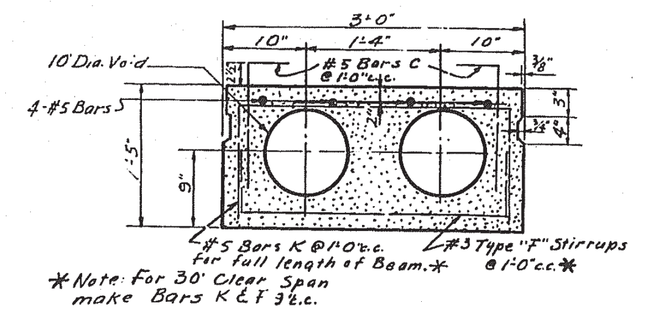

*Note: For 30' Clear Span make Bars K & F 3½" c.c.

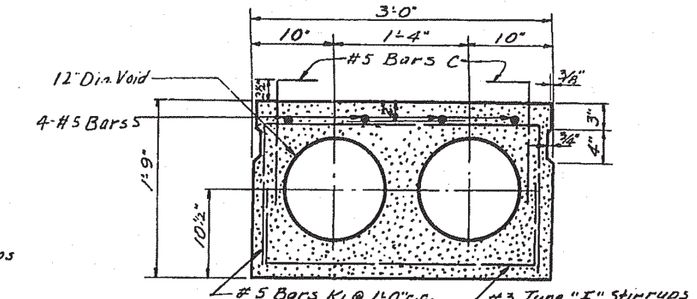

*Note: for 36' Clear Span make Bars K1 & F 9" c.c.

17" DEPTH

Clear Span Feet	Prestressed Steel Area	No. 7/16" Strands	Weight Basic Member	Class "A" Concrete Cu. Yds.	Reinf. Steel Lbs±
20'	1.42	13	11,200	2.74	321
22'	1.63	15	12,250	3.02	350
24'	1.85	17	13,150	3.25	379
26'	2.30	21	14,100	3.48	408
28'	2.72	25	15,100	3.73	436

21" DEPTH

Clear Span Feet	Prestressed Steel Area	No. 7/16" Strands	Weight Basic Member	Class "A" Concrete Cu. Yds.	Reinf. Steel Lbs±
30'	2.29	21	18,920	4.67	485
32'	2.61	24	20,100	4.96	516
34'	2.94	27	21,200	5.23	545
36'	3.81	35	22,300	5.51	669

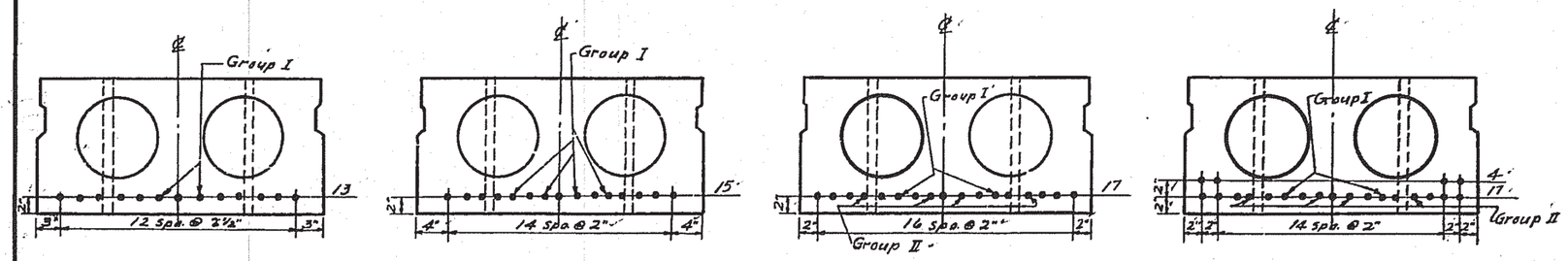

17" Depth - 20' Clear Span 13 Strands

17" Depth - 22' Clear Span 15 Strands

17" Depth - 24' Clear Span 17 Strands

17" Depth - 26' Clear Span 21 Strands

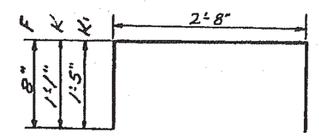

BARS K & K1 & F

Note: for overall length of Beams see Layout Sheet for each Bridge.

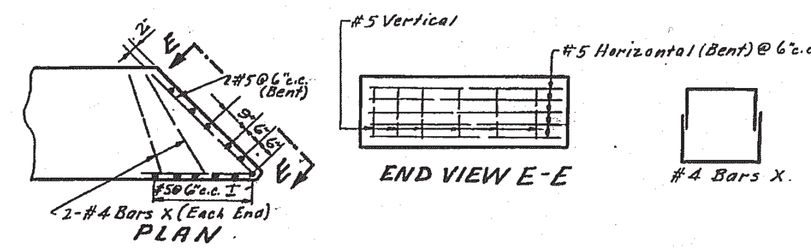

SKETCH SHOWING ADDITIONAL REINFORCEMENT TO BE PLACED IN ACUTE CORNERS OF PRESTRESSED BOX BEAM.

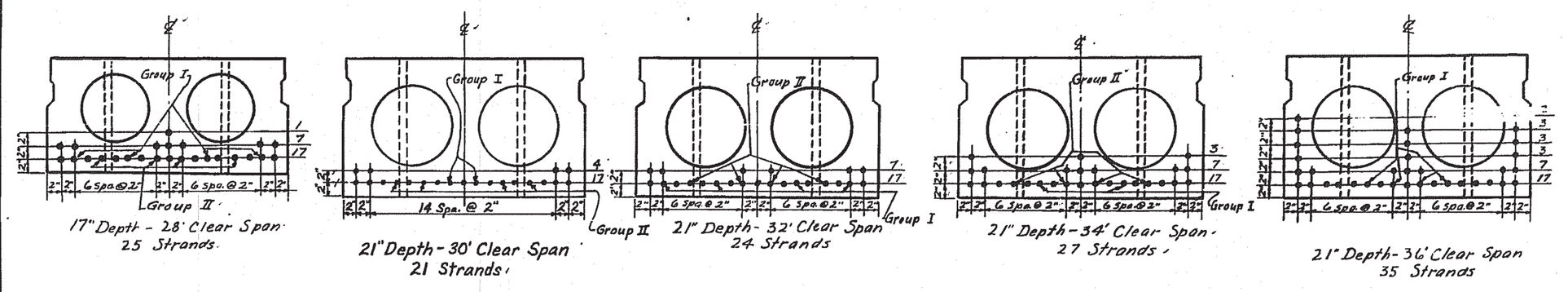

17" Depth - 28' Clear Span 25 Strands

21" Depth - 30' Clear Span 21 Strands

21" Depth - 32' Clear Span 24 Strands

21" Depth - 34' Clear Span 27 Strands

21" Depth - 36' Clear Span 35 Strands

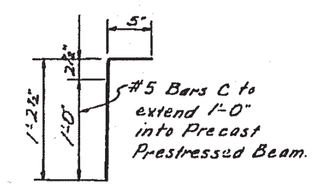

BARS C

Note: Top of Box to be rough floated. At approximately the time of initial set the top of the Box shall be scrubbed transversely with a coarse wire brush to remove all laitance and to produce a rough surface.

GENERAL NOTES:

SPECIFICATIONS: Standard Road & Bridge Specifications of the Tennessee Department of Highways.

LOADING: H20-S16-44.

CONCRETE: (CAST-IN-PLACE) To Be Class "A."

PRECAST, PRESTRESSED CONCRETE: See Specifications.

REINFORCING STEEL: To be Intermediate or Hard Grade.

FORMS & FINISH: See Specifications.

HANDLING PRESTRESSED DECK UNIT: See Specifications.

PRETENSIONING STEEL: An initial force of 18,900 Lbs. shall be applied to each strand in all Beams.

DESIGN: AASHO Specifications 1961.

JOINT SEALER: Class "B" Bridge Joint Sealer: See Special provisions.

PRESTRESSING STRANDS: To be 7/16 ϕ 7 wire uncoated stress relieved prestressing strands.

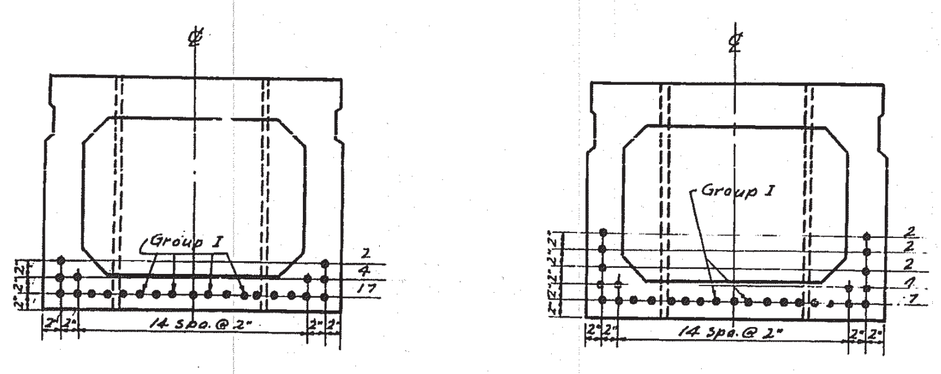

27" Depth - 38' Clear Span 23 Strands

27" Depth - 40' Clear Span 27 Strands

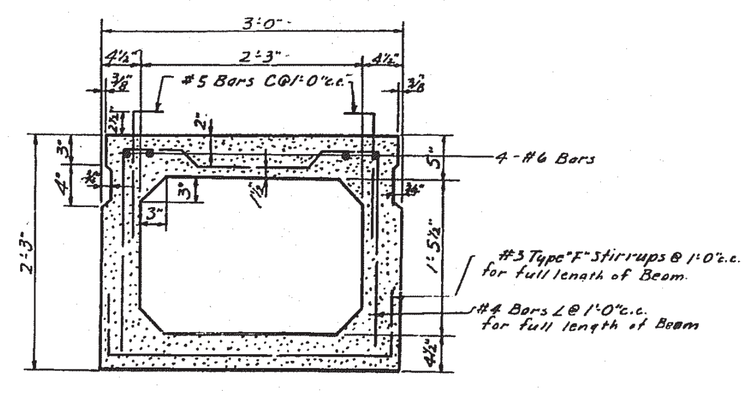

27" DEPTH

Clear Span Feet	Prestressed Steel Area	No 7/16" Strands	Weight Basic Member	Class "A" Concrete Cu Yds.	Reinf. Steel Lbs±
38'	2.50	23	23,650	5.84	631
40'	2.94	27	24,750	6.11	663

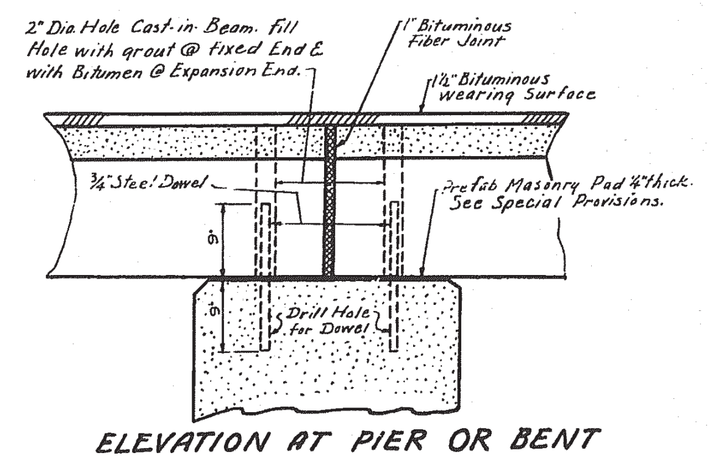

ELEVATION AT PIER OR BENT

Revised: 7-20-65 Std. for 17" Box Beam.
Revised: 12-4-64 Wt. Reinforcing Steel for 30', 32', 34', 36', & 40' Clear Span.
Revised: 12-4-64 30' Clear Span Beam Depth changed.
Revised: 11-25-64 Wt. Reinforcing Steel for 36' Clear Span.
REVISED: 8-24-64 - Prestressing Strand Data.
Revised: 8-14-63 - F-Bar Spacing for 30' & 36' Clear Spans.

DESIGNED BY		DATE
DRAWN BY	El. Owen & John Towry	DATE 10-19-62
TRACED BY	B. Kelley	DATE 11-19-62
CHECKED BY	L. G. Emde	DATE 11-19-62

STATE OF TENNESSEE
DEPARTMENT OF HIGHWAYS
NASHVILLE

STANDARD
BRIDGE WIDENING
PRESTRESSED BOX BEAMS
SPANS 20' TO 40'
FOR 8'-0" WIDENING
1962

CORRECT Fred Graves
APPROVED Chas. D. Kemp
WITH K-15-67