FED ROAD DIST No	STATE	FED AID PROJ No	FISCAL YEAR	SHEET No	TOTAL SHEETS
8	TENN	36-B	19		

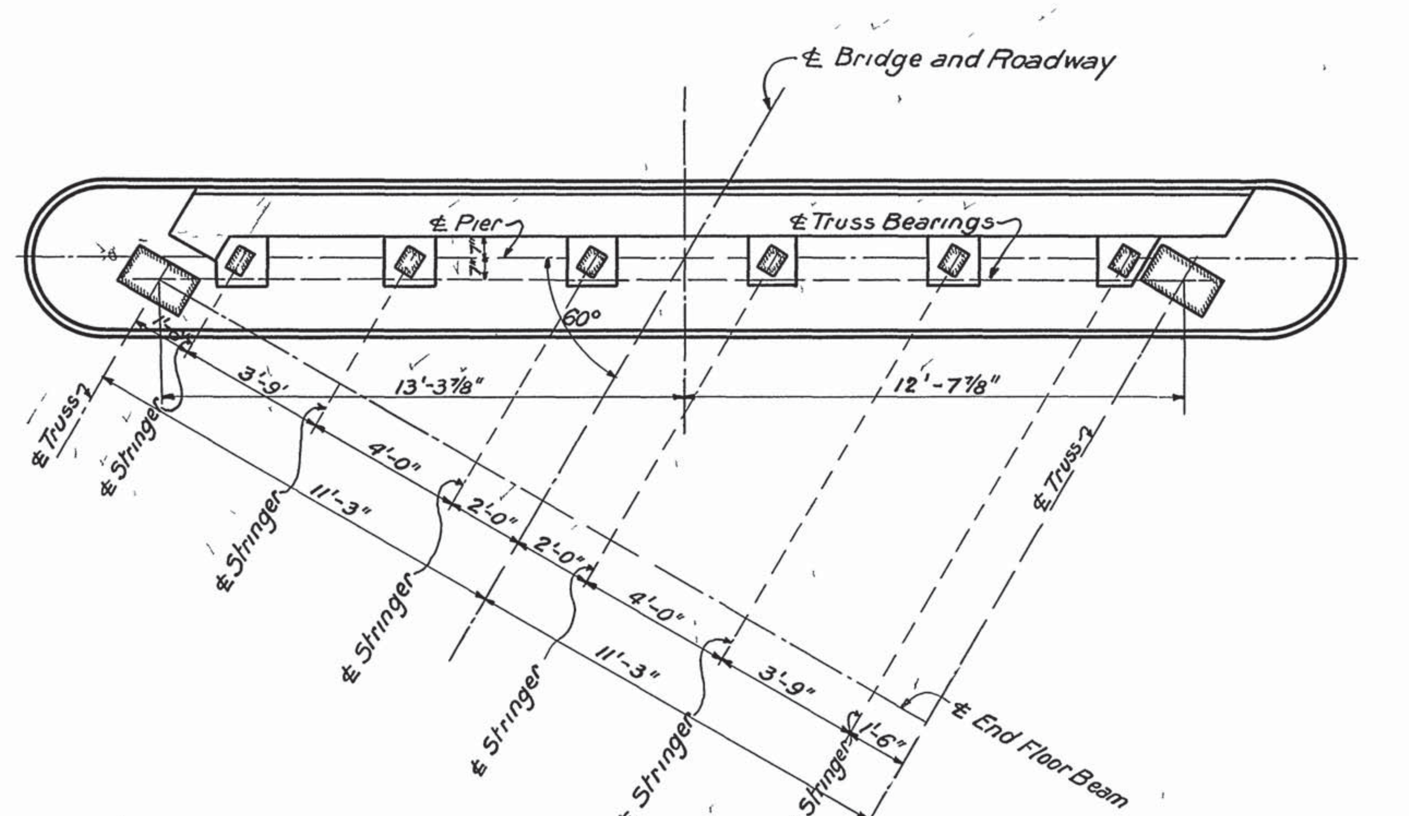

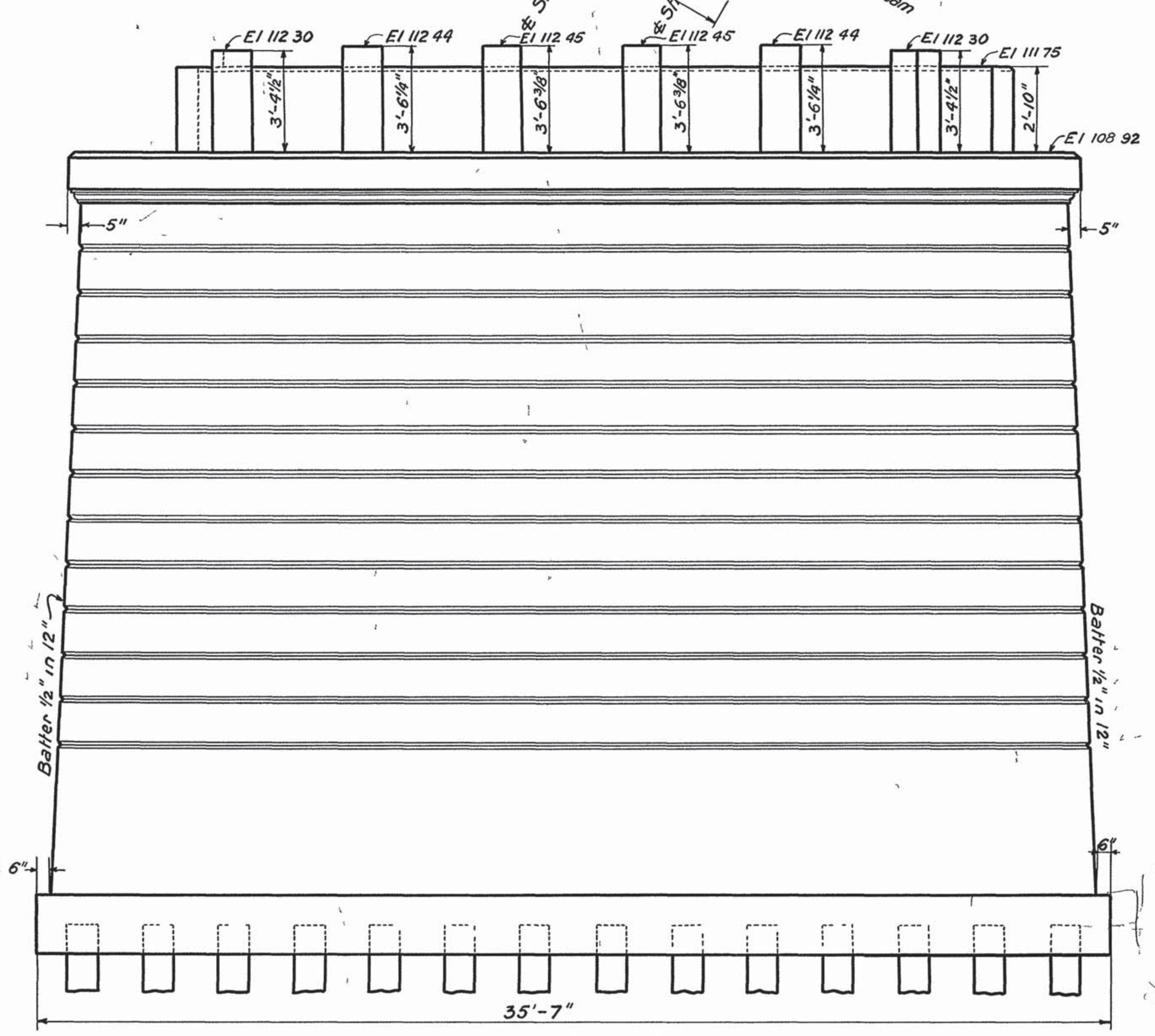

SIDE ELEVATION.

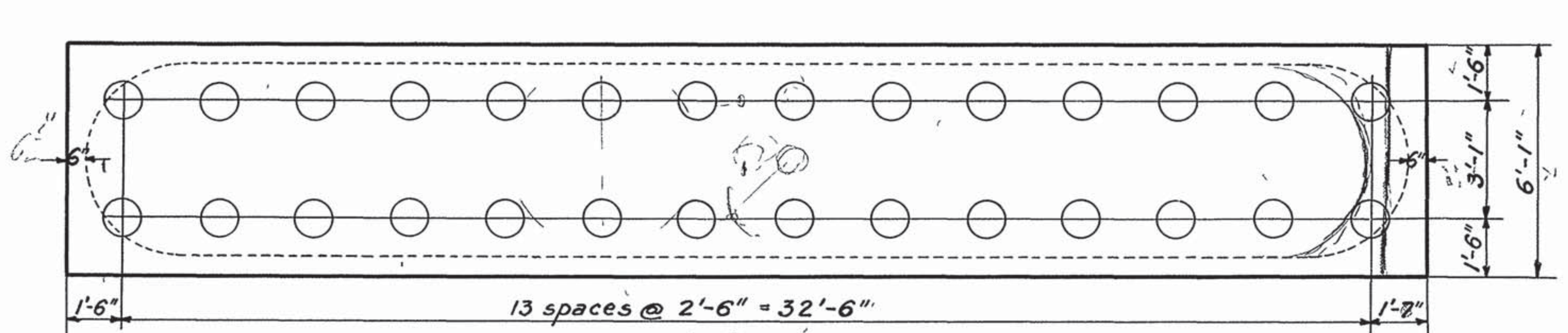

PILE PLAN.

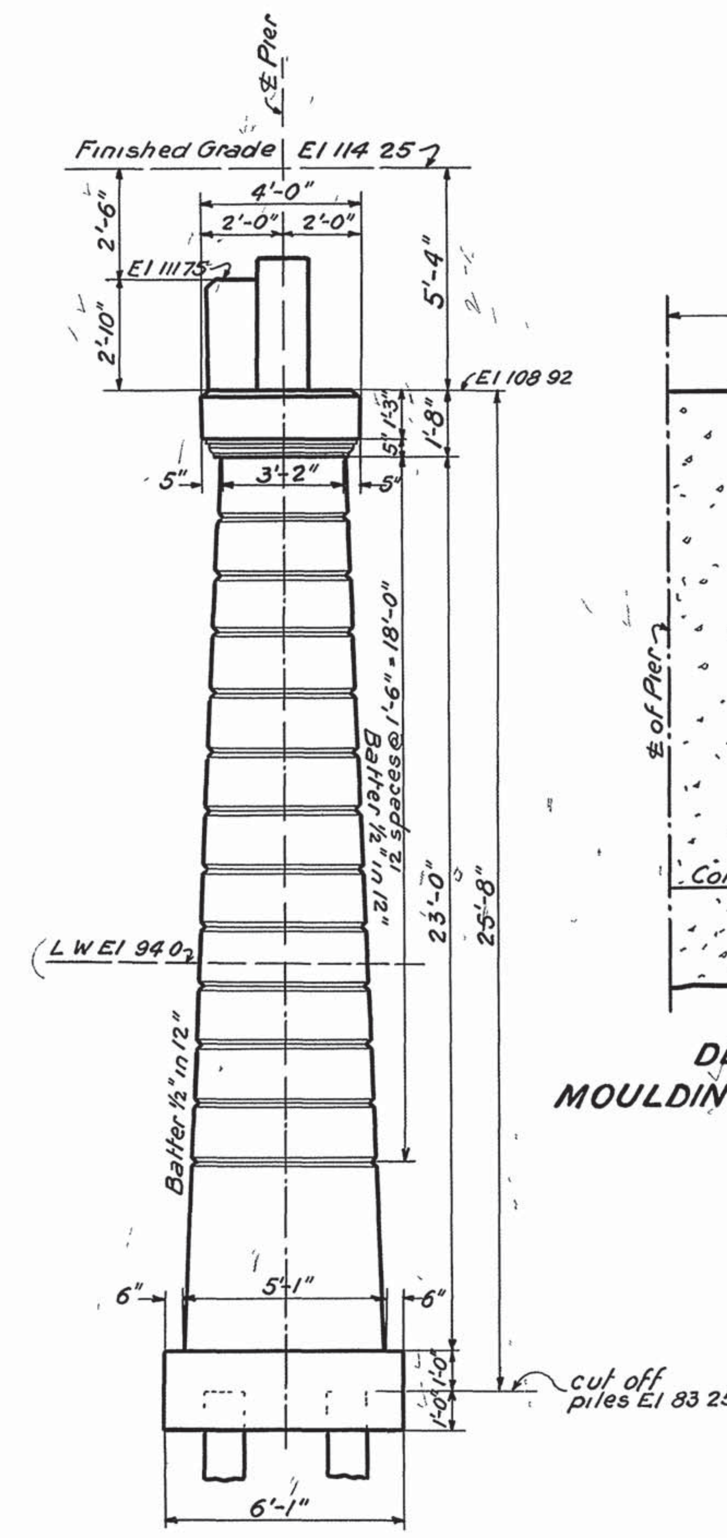

END ELEVATION.

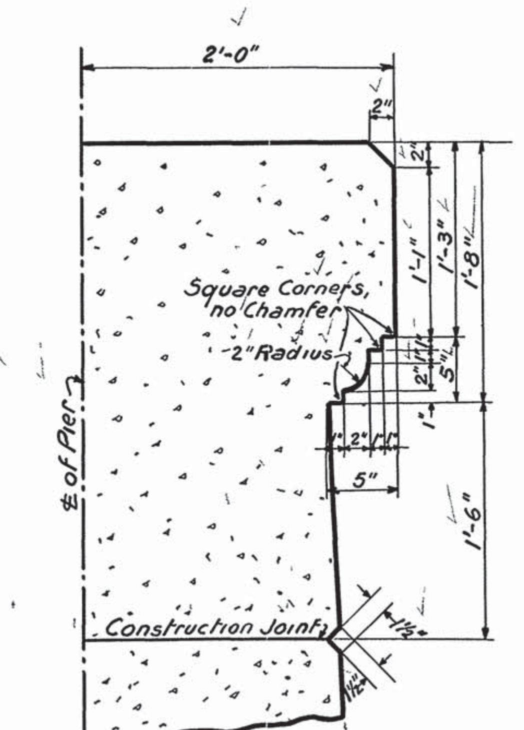

DETAILS OF MOULDING & BELT COURSE.

Note
Belt courses shall be spaced as shown They shall be formed by nailing triangular strips inside the forms
The pouring of the concrete shall be so arranged that the construction joints will be made on the apex of the beads as shown

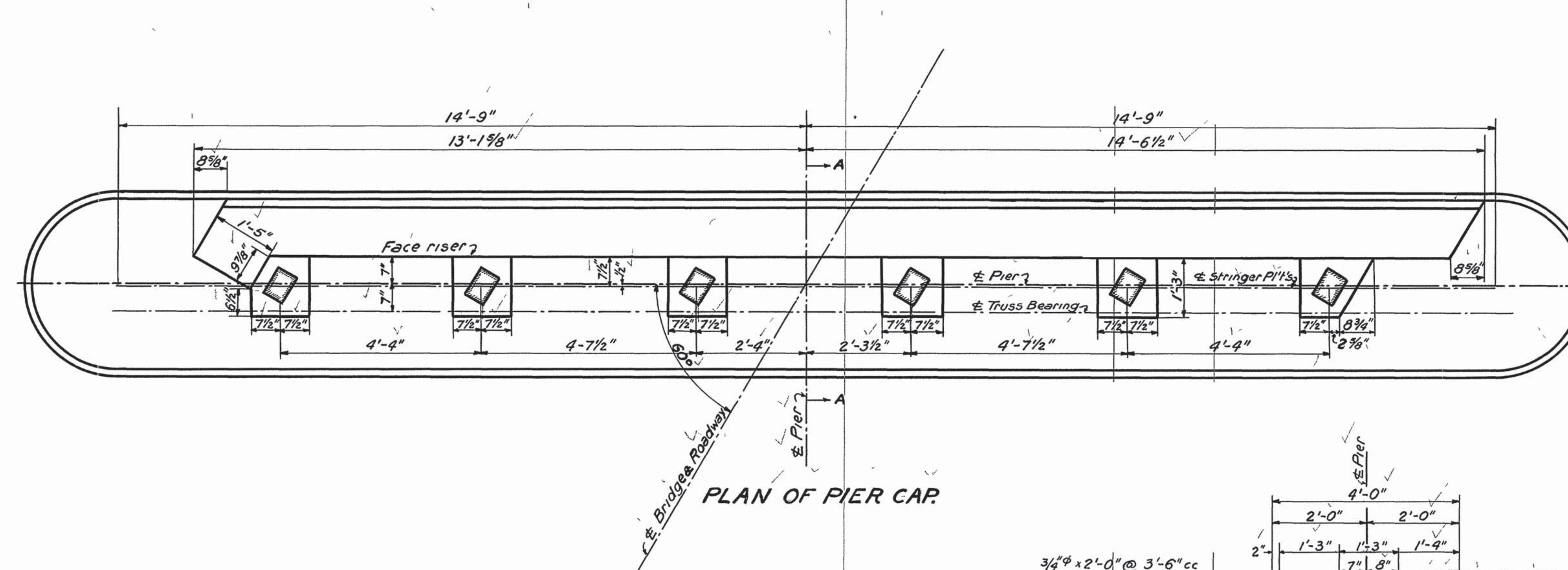

PLAN OF PIER CAP.

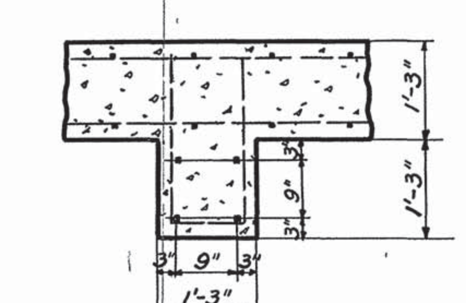

PLAN SECTION THRU RISERS.

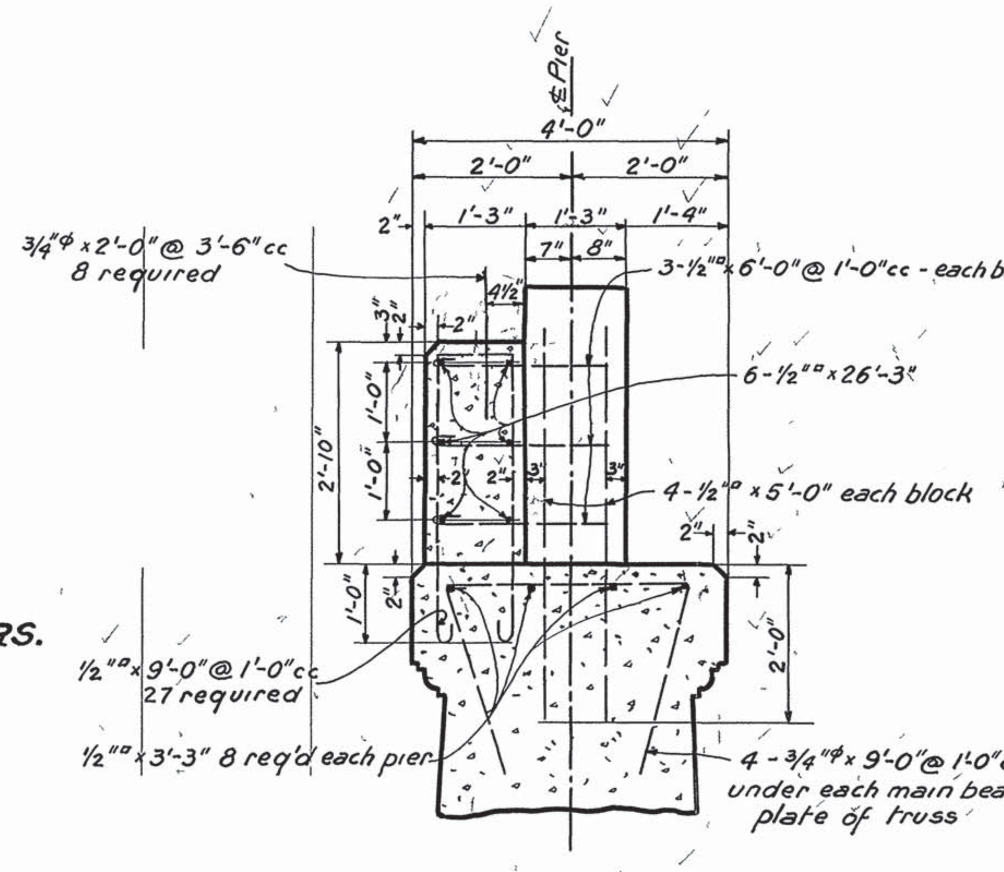

SECTION A-A.

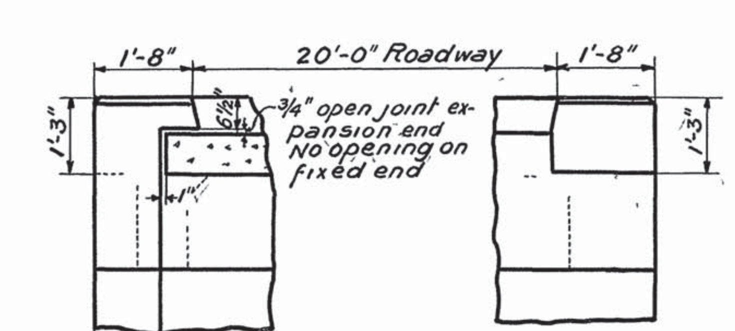

SECTION S-S. SECTION R-R.

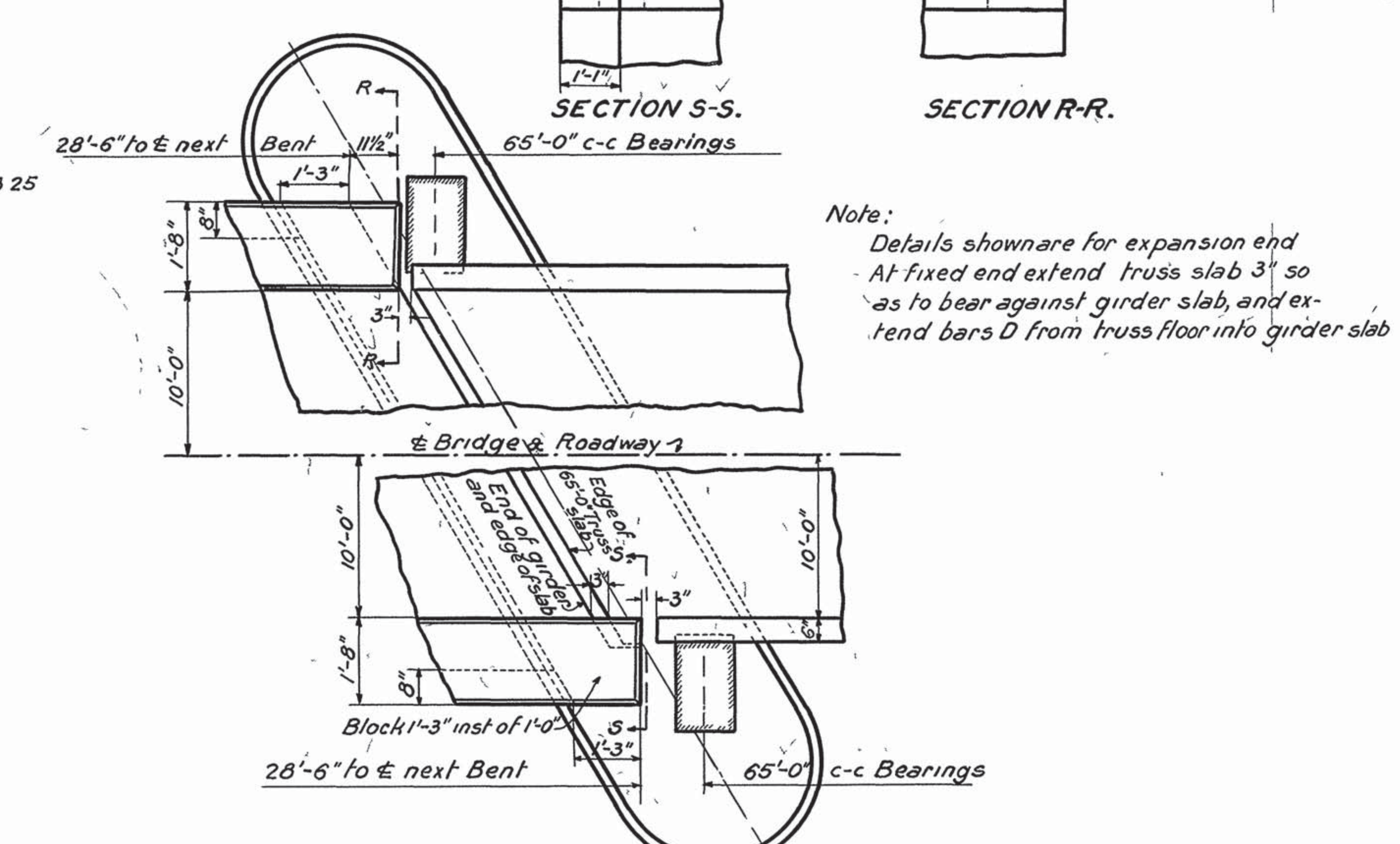

Note:
Details shown are for expansion end
At fixed end extend truss slab 3" so as to bear against girder slab, and extend bars D from truss floor into girder slab

DETAIL OF CURB ARRANGEMENT AT PIERS.

General Notes
Specifications - Standard Bridge Specifications of the Tennessee Department of Highways
Concrete shall be 1 2½ 5 mixture, coarse aggregate ¼" to 2½"
Reinforcing steel shall be deformed bars of structural steel or intermediate grade made by the O H process
Forms - See Specifications
Finish - See Specifications

STATE OF TENNESSEE
DEPARTMENT OF HIGHWAYS
AND PUBLIC WORKS
NASHVILLE

DETAILS OF PIERS № 1 & 2
BRIDGE AT STA 1193+87.9
SHELBY CO.

CORRECT L. W. Erickson BRIDGE ENGINEER
APPROVED ASSISTANT STATE HIGHWAY ENGINEER

DESIGNED BY F. Grace DATE 11-2-25
DRAWN BY F. Grace DATE 11-2-25
TRACED BY J. Schneider DATE 11-12-25
CHECKED BY DATE 11-5-25

D-5-47

MICROFILMED