SP1124F.DGN

CONST. NO. 79011-3266-94		
PROJECT NO.	YEAR	SHEET NO.
BR-STP-1(283)	2015	

REVISIONS

NO.	DATE	BY	BRIEF DESCRIPTION

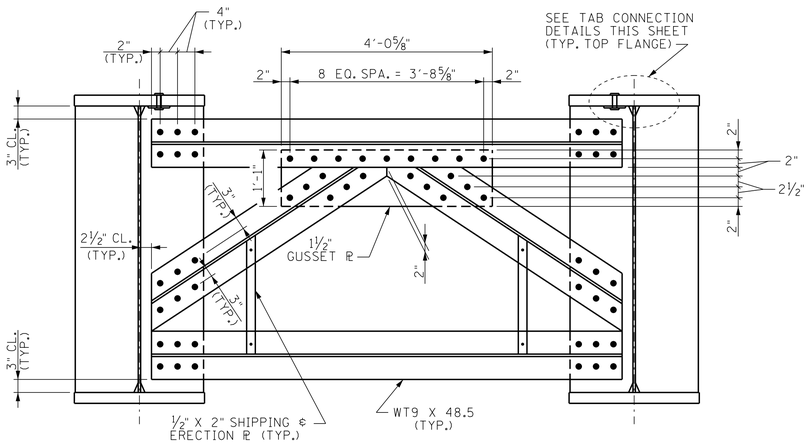

BENT DIAPHRAGM DETAIL

(TYPICAL ALL BENTS)

NOTE: USE 1¼"ø H. S. BOLTS (A325 TYPE 3)

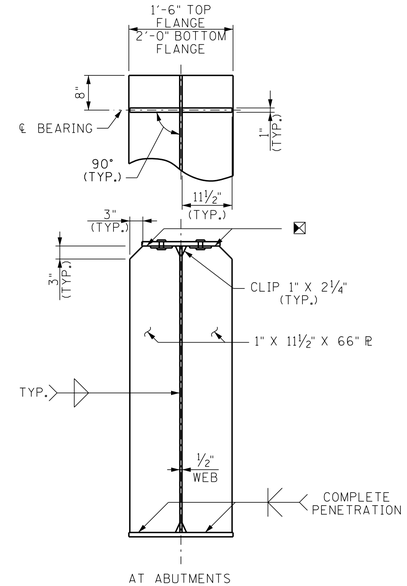

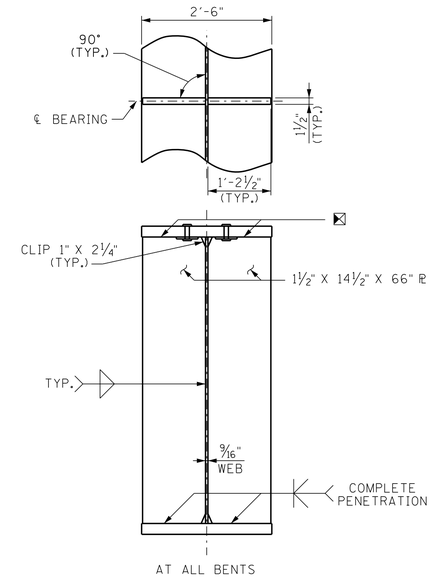

BEARING STIFFENERS

⊠ DENOTES: TIGHT FIT TO FLANGE (TAB CONNECTION DETAILS REQUIRED FOR TOP FLANGES).

NOTE: CROSS-FRAME CONNECTION DETAILS NOT SHOWN.

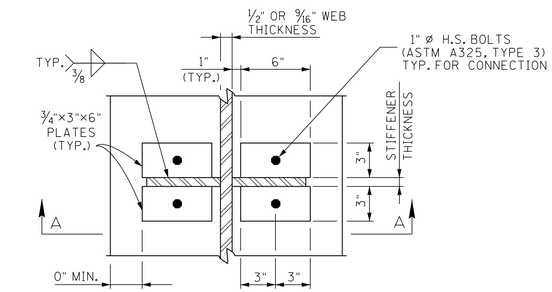

PLAN

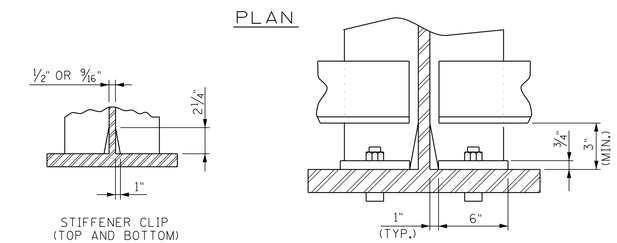

SECTION A-A

■ DENOTES: AT ABUTMENTS USE 4¼" CLEAR FOR TOP ANGLE DUE TO SLAB EDGE BEAM DEPTH.

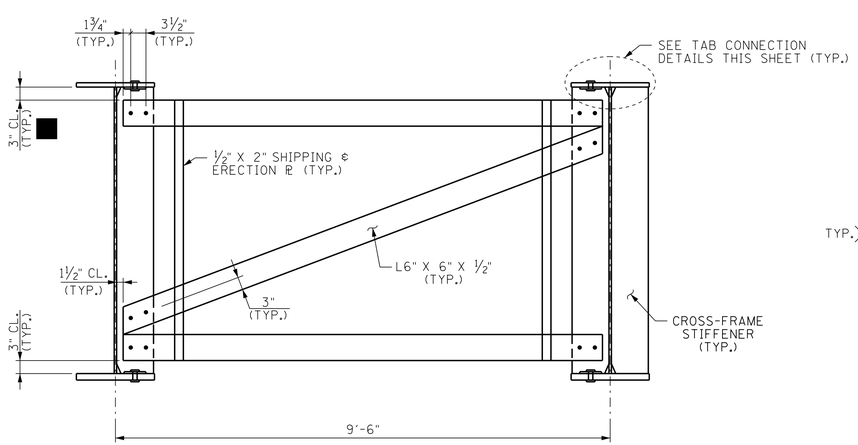

CROSS-FRAME DETAIL

NOTE: USE 1"ø H. S. BOLTS (A325 TYPE 3)

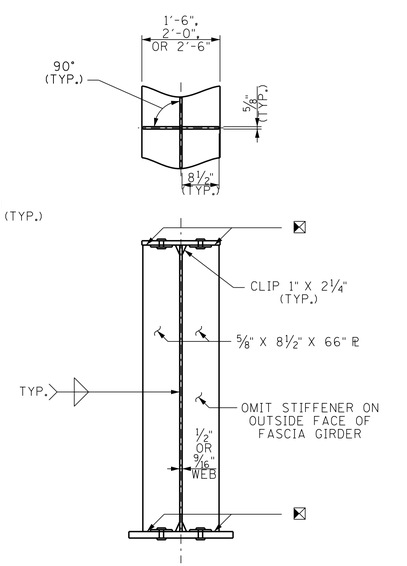

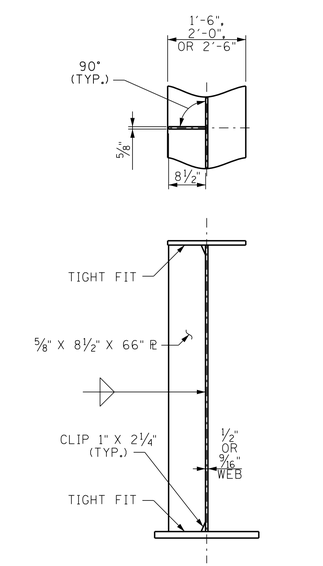

INTERMEDIATE STIFFENERS

⊠ DENOTES: TIGHT FIT TO FLANGE (TAB CONNECTION DETAILS REQUIRED FOR TENSION AND COMPRESSION FLANGES).

◑ DENOTES: CROSS-FRAME CONNECTION DETAILS NOT SHOWN.

TAB CONNECTION DETAILS

NOTE: TYPICAL TOP AND BOTTOM FLANGE. (BOTTOM FLANGE DETAILS SHOWN.)
NOTE: TAB YIELD STRENGTH SHALL MATCH STIFFENER YIELD STRENGTH. TAB SIZE AND LOCATION SHALL BE AS SHOWN REGARDLESS OF STIFFENER WIDTH.
NOTE: 1" ø - A325 TYPE 3 BOLTS TO BE TORQUED TO AASHTO SPECIFICATION FOR FRICTION CONNECTION PRIOR TO TAB TO STIFFENER WELD.
NOTE: WEB STIFFENER SHALL BE TIGHT FIT WITHIN AWS D1.1 FABRICATION TOLERANCE.

STATE OF TENNESSEE
DEPARTMENT OF TRANSPORTATION

SUPERSTRUCTURE DETAILS
STATE ROUTE 1
OVER
LOOSAHATCHIE RIVER
STATION 1197+55.00
SHELBY COUNTY
2015

CORRECT Wayne J. Sieger
ENGINEER OF STRUCTURES

DESIGNED BY ADAM PRICE	DATE 1-14		
DRAWN BY T.R. KIRK	DATE 12-14		
SUPERVISED BY FIELDS/DIETERS	DATE 12-14		
CHECKED BY ADAM PRICE	DATE 3-15		

U-56-124