AB1128F.DGN

CONST. NO. 79011-3266-94

PROJECT NO.	YEAR	SHEET NO.
BR-STP-1(283)	2015	

REVISIONS

NO.	DATE	BY	BRIEF DESCRIPTION

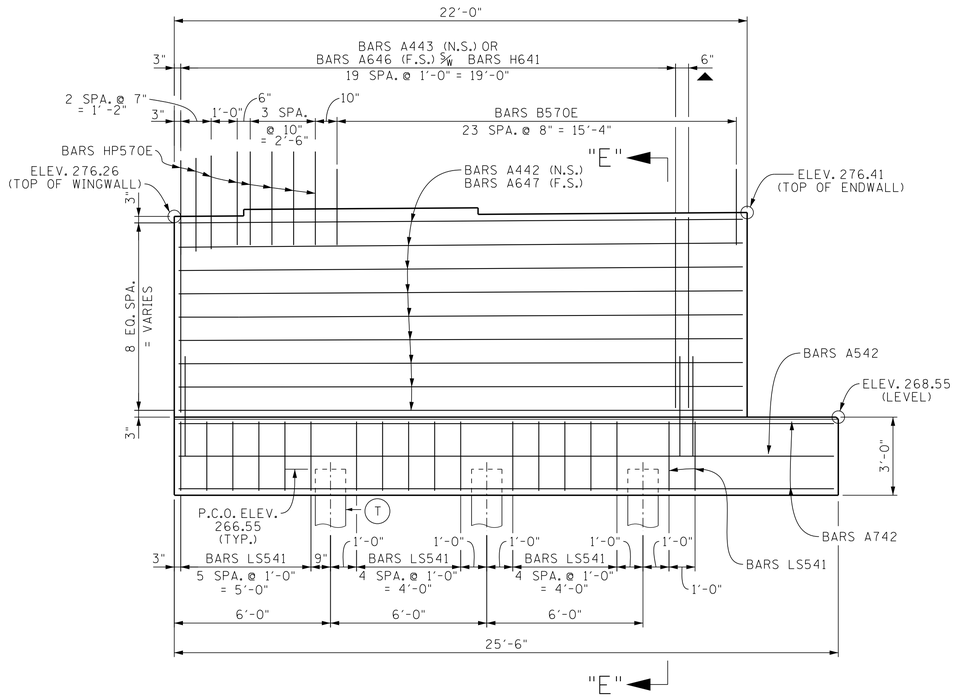

ELEVATION "A" - "A"

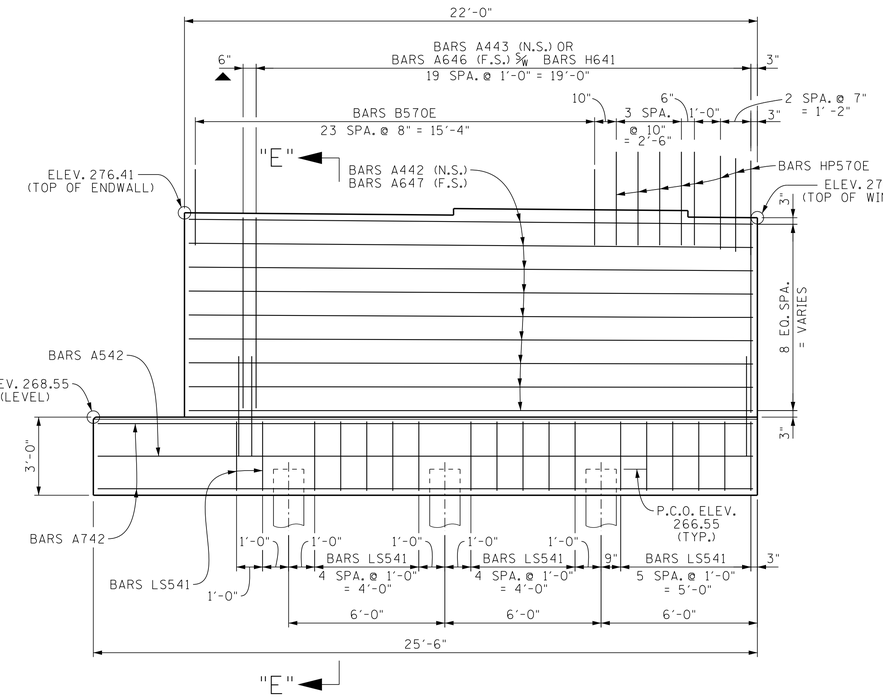

ELEVATION "B" - "B"

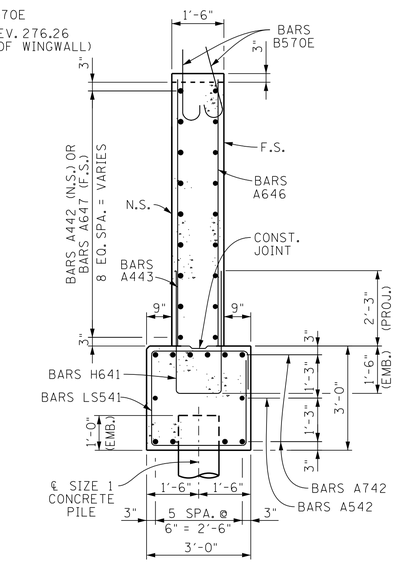

SECTION "E" - "E"

P.C.O. DENOTES: PILE CUT-OFF

N.S. DENOTES: NEAR SIDE.

F.S. DENOTES: FAR SIDE.

▲ DENOTES: BARS A443 (N.S.) OR BARS A646 (F.S.) ⅋ BARS H641

(T) DENOTES: TEST PILE

STATE OF TENNESSEE
DEPARTMENT OF TRANSPORTATION
ABUTMENT NO. 2 DETAILS
STATE ROUTE 1
OVER
LOOSAHATCHIE RIVER
STATION 1197+55.00
SHELBY COUNTY
2015

CABRINA M. DIETER — STATE OF TENNESSEE — 05-01-2015

CORRECT Wayne A. Sayed
ENGINEER OF STRUCTURES

DESIGNED BY	ADAM PRICE	DATE	04-14
DRAWN BY	RODNEY CHANDLER	DATE	02-15
SUPERVISED BY	C.M.D. / J.W.F.	DATE	02-15
CHECKED BY	ADAM PRICE	DATE	04-15

U-56-135