BEARINGDEVICEDETAIL1124F.DGN

EXPANSION DEVICE

(ALL MATERIAL SHALL BE A709 GRADE 50 UNLESS OTHERWISE NOTED.)

LOCATION	NUMBER REQUIRED	R, (KIPS) SERVICE I	E, (IN.)	FW, (IN.)	BASE PLATE		SELF LUBRICATING PLATE		SLIDER PLATE		PIN ASSEMBLY	
					BL	BW	CL	CW	SL	SW	PL	AL
ABUT. NO'S 1 & 2	10	239	4	24	36	12	28	10	28	16	27	20

R = REACTION IN KIPS
FW = FLANGE WIDTH IN INCHES
E = EXPANSION IN INCHES
CW = [R / (2 (FW + 4"))] + E
SW = BW + E
BW = (THE GREATER VALUE OF) CW + 2" OR BW = R / BL OR 12" MIN.

Ⓐ 2'-6"
A 7" HOOK IS REQUIRED FOR SEISMIC DESIGN.

SEISMIC HOOK DETAIL

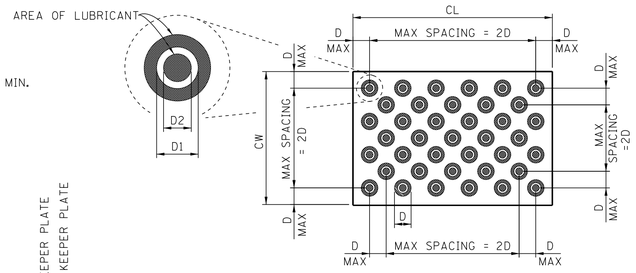

PLAN OF BRONZE/ COPPER ALLOY PLATE

AL = TOTAL CROSS-SECTIONAL AREA OF LUBRICANT
(0.25) (CW) (CL) ≤ AL ≤ (0.30) (CW) (CL)
RECESSES SHALL BE TREPANNED TO A DEPTH OF 1/4"
FABRICATOR SHALL SUBMIT DETAIL OF BRONZE/ COPPER ALLOY PLATE FOR APPROVAL

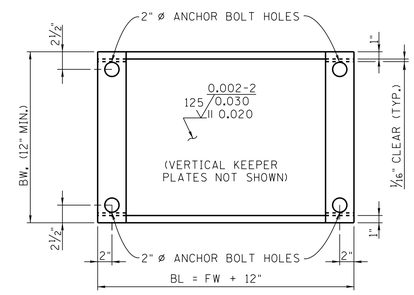

PLAN OF BASE PLATE

(CAUTION: DO NOT FINISH COPPER PLATE OR BRONZE CASTING TOP OR BOTTOM)

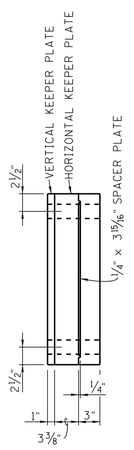

END VIEW

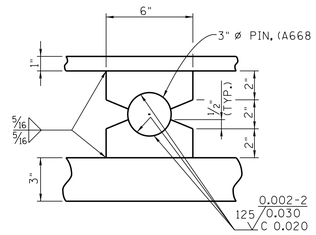

PIN & BEARING ASSEMBLY

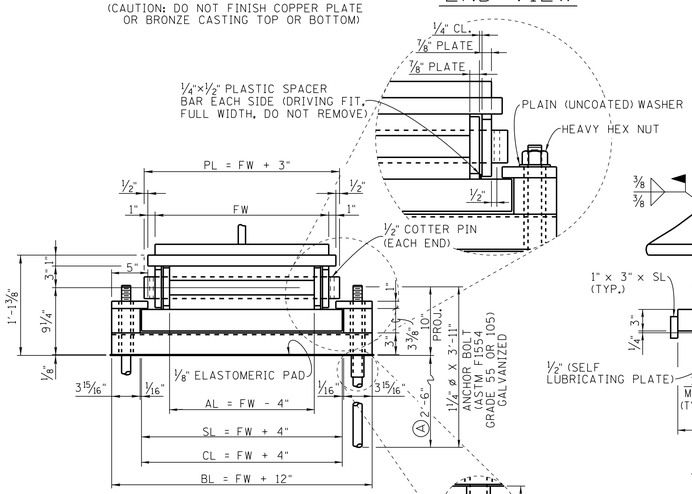

ELEVATION

SELF-LUBRICATING SLIDER PLATES SHALL BE AASHTO M108, (ASTM B 100), COPPER ALLOY OR AASHTO M107, (ASTM B 22 ALLOY C90500, C91100 OR C86300), BRONZE CASTINGS

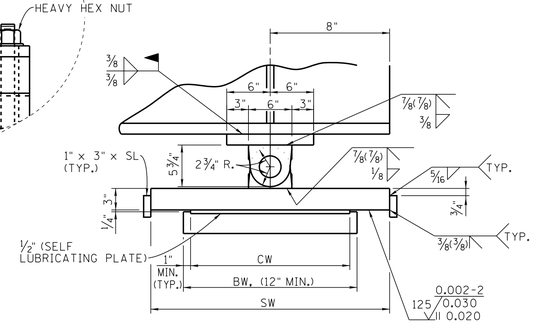

END ELEVATION

FINISH NOTE:
ALL MACHINED AND/OR ROLLED SURFACES IN DIRECT CONTACT WITH THE SELF LUBRICATING COPPER-ALLOY PLATE (ASTM B 100) OR BRONZE CASTING (ASTM B 22 ALLOY C90500, C91100 OR C86300), SHALL MEET THE ANSI SURFACE ROUGHNESS REQUIREMENTS AS DEFINED IN ASA B-46.1 SURFACE ROUGHNESS, WAVINESS AND LAY, PART 1. MAXIMUM ROUGHNESS HEIGHT SHALL BE 125 MICROINCHES AND MACHINE MARKS ARE TO BE PARALLEL TO THE DIRECTION OF MOVEMENT ON THE MOVING PART.

DESIGNED BY	ADAM PRICE	DATE	06-14
DRAWN BY	CHRIS STAPLER	DATE	01-15
SUPERVISED BY	C.M.D./J.W.F.	DATE	01-15
CHECKED BY	ADAM PRICE	DATE	04-15

FIXED DEVICE

(ALL MATERIAL SHALL BE A709 GRADE 50 UNLESS OTHERWISE NOTED.)

LOCATION	NUMBER REQUIRED	R, (KIPS) SERVICE I	FW, (IN.)	BASE PLATE		SPACER PLATE		PIN ASSEMBLY	
				BL	BW	SL	SW	PL	AL
BENT NO.'S 1, 2 & 3	15	692	30	42	18	34	12	33	26

R = REACTION IN KIPS
FW = FLANGE WIDTH IN INCHES
BW = R / BL
SW = BW - 6"

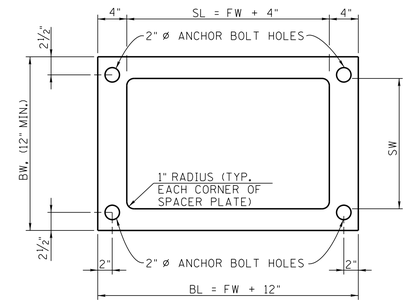

PLAN OF BASE PLATE

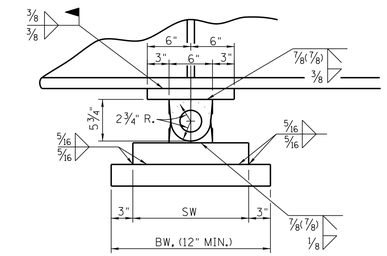

END ELEVATION

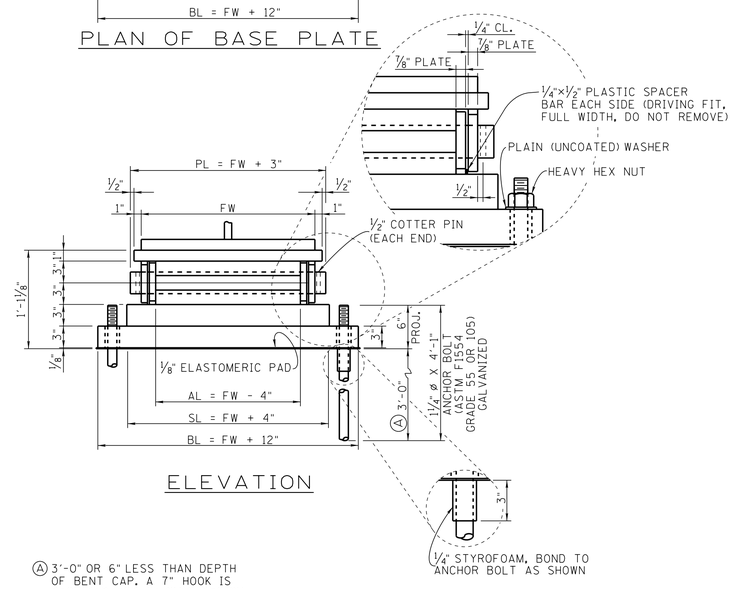

ELEVATION

Ⓐ 3'-0" OR 6" LESS THAN DEPTH OF BENT CAP. A 7" HOOK IS REQUIRED FOR SEISMIC DESIGN.

SEISMIC HOOK DETAIL

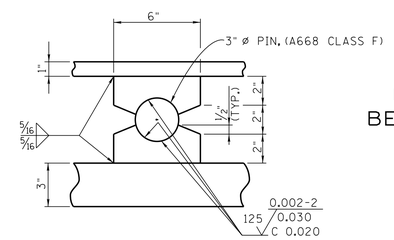

PIN & BEARING ASSEMBLY

GENERAL NOTES:

NOTE: PIN AND BOTTOM OF SLIDER PLATE SHALL BE LUBRICATED WITH MOLYKOTE 3402C BONDED LUBRICANT.

NOTE: ANCHOR BOLTS SHALL BE TORQUED TO PRODUCE 60% OF ANCHOR BOLT YIELD STRESS.

NOTE: ANCHOR BOLTS SHALL BE GALVANIZED ACCORDING TO ASTM F2329 OR MECHANICALLY GALVANIZED TO ASTM B695.

NOTE: ALL EXPOSED SURFACES OF ASSEMBLED BEARING DEVICES TO BE PAINTED UTILIZING THE FOLLOWING PAINT: INORGANIC ZINC WITH URETHANE FINISH BROWN TOP COAT CONFORMING TO FEDERAL STANDARD 595C (30059). TYPICAL ALL BEARING DEVICES.

CONST. NO. 79011-3266-94

PROJECT NO.	YEAR	SHEET NO.
BR-STP-1(283)	2015	

REVISIONS

NO.	DATE	BY	BRIEF DESCRIPTION

CABRINA M. DIETERS
REGISTERED ENGINEER
AGRICULTURE
STATE OF TENNESSEE
10/14/2015

STATE OF TENNESSEE
DEPARTMENT OF TRANSPORTATION
BEARING DEVICE DETAILS
STATE ROUTE 1
OVER
LOOSAHATCHIE RIVER
STATION 1197+55.00
SHELBY COUNTY
2015

CORRECT Wayne J. Feger
ENGINEER OF STRUCTURES

U-56-127