FED ROAD DIST NO	STATE	FED AID PROJ NO	FISCAL YEAR	SHEET NO	TOTAL SHEETS
3	TENN		19		

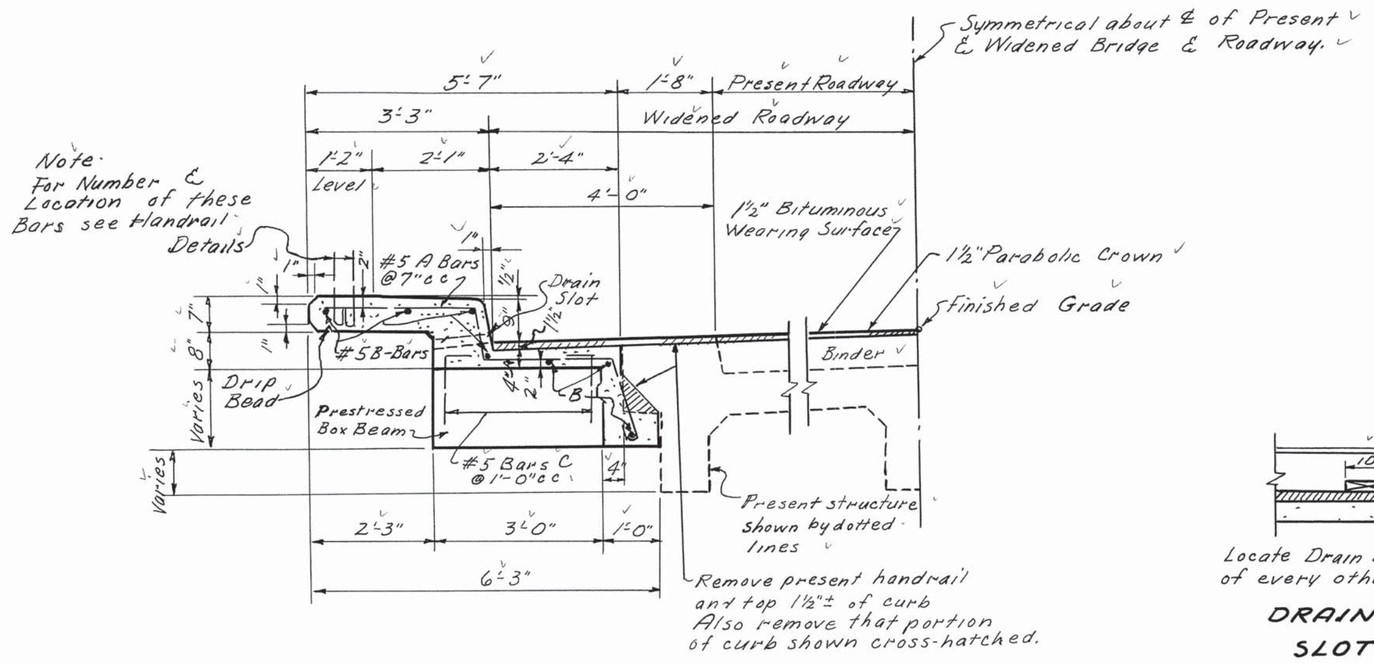

HALF SECTION A-A

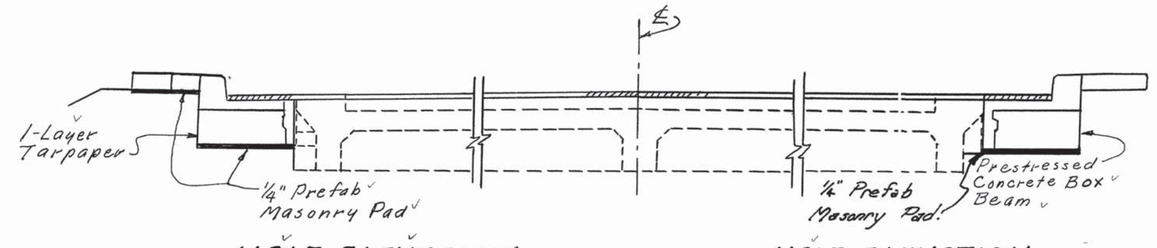

HALF ELEVATION ABUTMENT END

HALF ELEVATION PIER OR BENT

ELEVATION

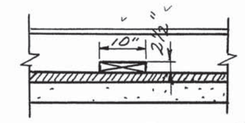

Locate Drain Slots at Center of every other Railing Panel

DRAINAGE SLOT DETAIL

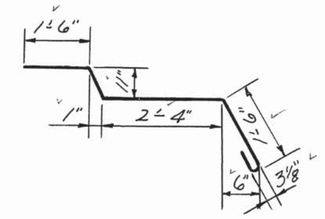

BAR A3

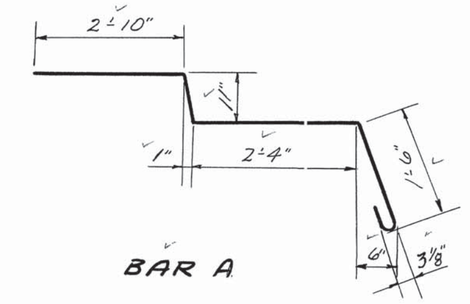

BAR A

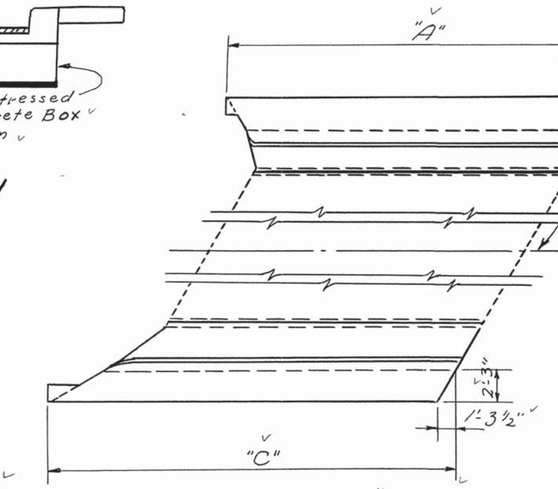

END SPAN 60° LEFT SKEW

Reinforcing Steel & Details not shown same as for Right Skew

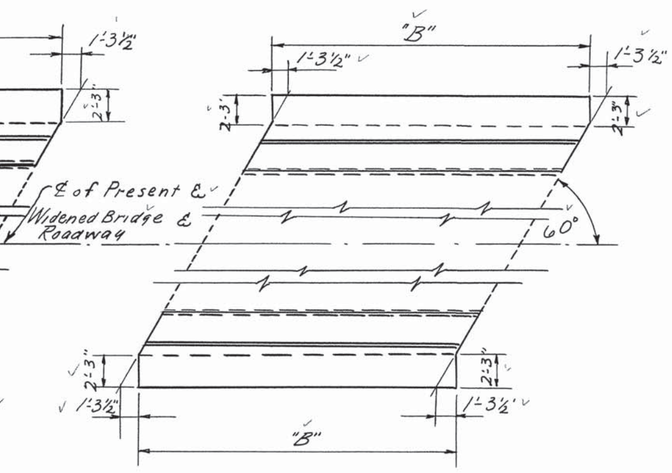

INTERMEDIATE SPAN 60° LEFT SKEW

Reinforcing Steel & Details not shown same as for Right Skew.

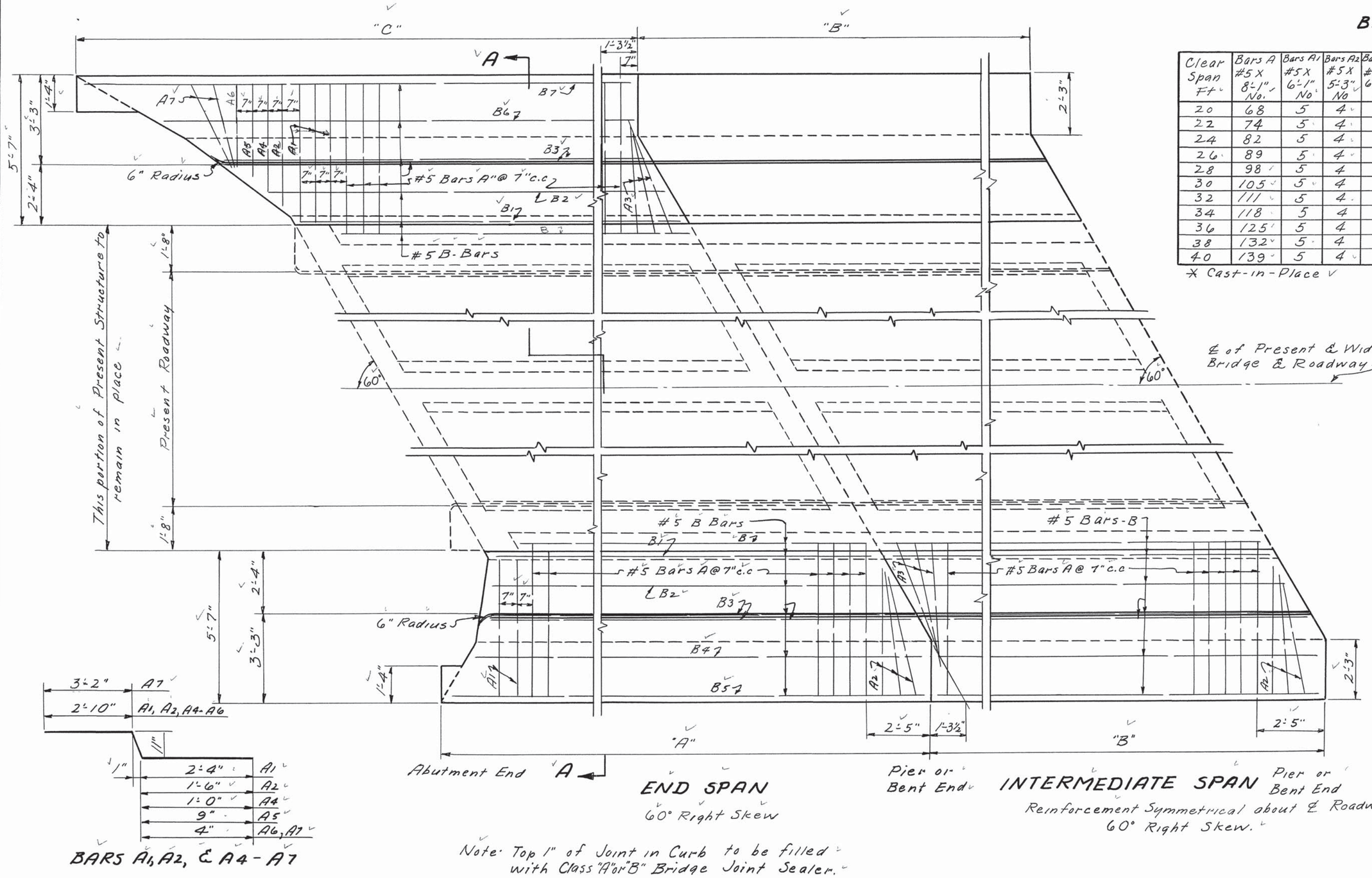

END SPAN 60° Right Skew

INTERMEDIATE SPAN 60° Right Skew

Reinforcement Symmetrical about ℄ Roadway.

Note: Top 1" of Joint in Curb to be filled with Class "A" or "B" Bridge Joint Sealer.

Note: Place a 1" Bituminous Fiber Joint between Spans.

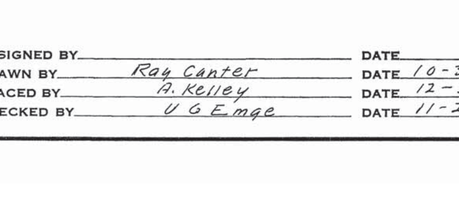

BARS A1, A2, & A4 - A7

BILL OF STEEL & ESTIMATED QUANTITIES
END SPAN - 60° SKEW

Clear Span Ft	Bars A #5 X 8'-1" No.	Bars A1 #5 X 6'-1" No.	Bars A2 #5 X 5'-3" No.	Bars A3 #5 X 6'-9" No.	Bars A4 #5 X 4'-9" No.	Bars A5 #5 X 4'-6" No.	Bars A6 #5 X 4'-1" No.	Bars A7 #5 X 4'-5" No.	Bars B 2-#5 Length	Bars B1 2-#5 Length	Bars B2 2-#5 Length	Bars B3 4-#5 Length	Bars B4 1-#5 Length	Bars B5 1-#5 Length	Bars B6 1-#5 Length	Bars B7 1-#5 Length	Concrete Class "A" Cu. Yds*	Reinforcing Steel Lbs
20	68	5	4	3	1	1	1	2	20'-8"	22'-0"	22'-9"	23'-8"	24'-6"	25'-6"	25'-3"	28'-0"	8.0	1014
22	74	5	4	3	1	1	1	2	22'-8"	24'-0"	24'-9"	25'-8"	26'-6"	27'-6"	27'-3"	30'-0"	8.7	1094
24	82	5	4	3	1	1	1	2	24'-8"	26'-0"	26'-9"	27'-0"	28'-6"	29'-6"	29'-3"	32'-0"	7.3	1191
26	89	5	4	3	1	1	1	2	26'-8"	28'-0"	28'-9"	29'-8"	30'-6"	31'-6"	31'-3"	34'-0"	10.0	1279
28	98	5	4	3	1	1	1	2	29'-2"	30'-6"	31'-3"	32'-2"	33'-0"	34'-0"	33'-9"	36'-6"	10.9	1391
30	105	5	4	3	1	1	1	2	31'-2"	32'-6"	33'-3"	34'-2"	35'-0"	36'-0"	35'-9"	38'-6"	11.5	1479
32	111	5	4	3	1	1	1	2	33'-2"	34'-6"	35'-3"	36'-2"	37'-0"	38'-0"	37'-9"	40'-6"	13.0	1557
34	118	5	4	3	1	1	1	2	35'-2"	36'-6"	37'-3"	38'-2"	39'-0"	40'-0"	39'-9"	42'-6"	13.7	1647
36	125	5	4	3	1	1	1	2	37'-2"	38'-6"	39'-3"	40'-2"	41'-0"	42'-0"	41'-9"	44'-6"	14.4	1736
38	132	5	4	3	1	1	1	2	39'-2"	40'-6"	41'-3"	42'-2"	43'-0"	44'-0"	43'-9"	46'-6"	16.8	1824
40	139	5	4	3	1	1	1	2	41'-2"	42'-6"	43'-3"	44'-2	45'-0"	46'-0"	45'-9"	48'-6"	17.6	1914

* Cast-in-Place

BILL OF STEEL & ESTIMATED QUANTITIES
INTERMEDIATE SPAN - 60° SKEW

Clear Span Ft	Bars A #5 X 8'-1" No	Bars A2 #5 X 5'-3" No	Bars A3 #5 X 6'-9" No	Bars B 14-#5 Length	Concrete Class "A" Cu Yds*	Reinforcing Steel Lbs
20	70	6	6	22'-0"	7.5	986
22	76	6	6	24'-0"	8.3	1066
24	82	6	6	26'-0"	8.8	1146
26	90	6	6	28'-0"	9.5	1243
28	98	6	6	30'-6"	10.3	1347
30	106	6	6	32'-6"	11.0	1443
32	112	6	6	34'-6"	12.6	1523
34	118	6	6	36'-6"	13.3	1603
36	126	6	6	38'-6"	14.0	1700
38	132	6	6	40'-6"	16.3	1779
40	140	6	6	42'-6"	17.1	1876

* Cast-in-place

GENERAL NOTES:

SPECIFICATIONS: Standard Road and Bridge Specifications of the Tennessee Department of Highways.

LOADING: H20-S16-44

CONCRETE (Cast-in-place): To be Class "A"

REINFORCING STEEL: To be Intermediate or Hard Grade.

FORMS & FINISH: See Specifications.

DESIGN: AASHO Specifications 1961

JOINT SEALER Class "A" or "B" Bridge Joint Sealer See Special Provisions.

Note: See Layout Sheet for Dimensions "A", "B" & "C"

STATE OF TENNESSEE
DEPARTMENT OF HIGHWAYS
NASHVILLE

STANDARD

SLAB PLAN

8'-0" WIDENING
SKEW 60° - SPANS 20' TO 40'
CLOSED TYPE ABUTMENTS
1962

DESIGNED BY		DATE	
DRAWN BY	Ray Canter	DATE	10-31-62
TRACED BY	A. Kelley	DATE	12-5-62
CHECKED BY	V. O. Emge	DATE	11-2-62

CORRECT Fred Greene BRIDGE ENGINEER

APPROVED Lee D. Long STATE HIGHWAY ENGINEER

K-15-73

WITH DWGS. K-15-66 & 67

MICROFILMED

Revised 7-6-64 Joint Sealer