FED. ROAD DIST. NO.	STATE	FED. AID PROJ. NO.	FISCAL YEAR	SHEET NO.	TOTAL SHEETS
3	TENN.		19		

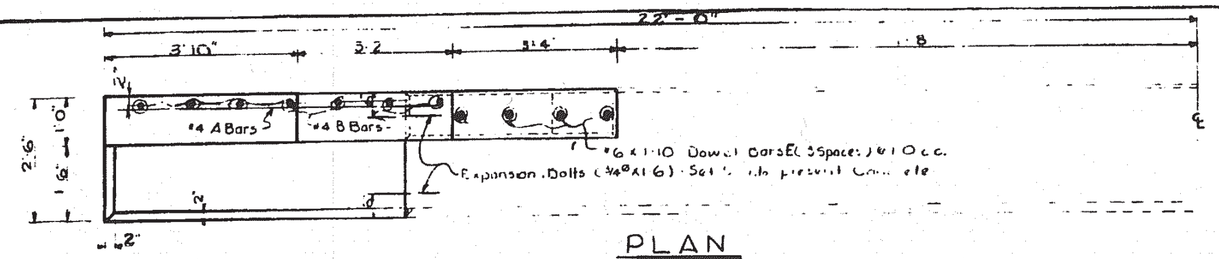

PLAN

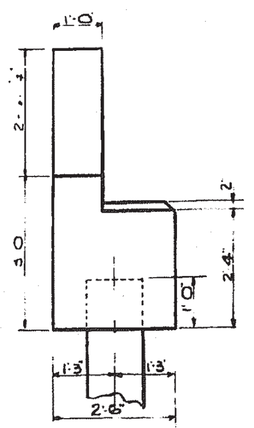

ELEVATION A-A

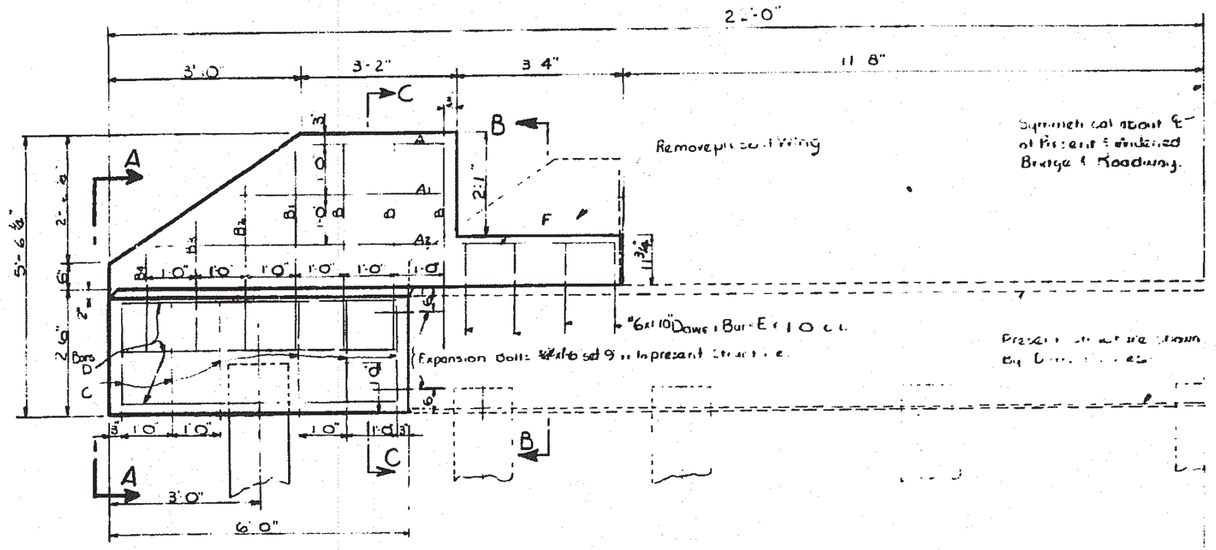

FRONT ELEVATION

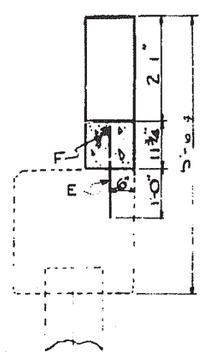

SECTION B-B

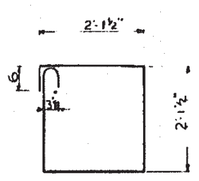

BARS C

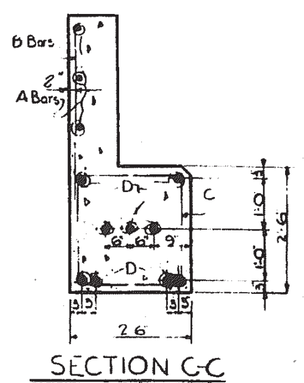

SECTION C-C

BILL OF STEEL

Bar	Size	No.	Length
A	#4	2	2'-10"
A1	#4	2	4'-5"
A2	#4	2	5'-10"
B	#4	6	4'-1"
B1	#4	2	3'-9"
B2	#4	2	3'-3"
B3	#4	2	2'-9"
B4	#4	2	2'-0"
C	#5	12	9'-6"
D	#7	18	5'-6"
E	#6	8	1'-10"
F	#6	2	3'-3"

ESTIMATED QUANTITIES

Concrete Class "A" 41 Cu. Yds
Reinforcing Steel 403 lbs.

Required 8 3/4 ϕ x 1'-6" Expansion Bolts

ABUTMENT

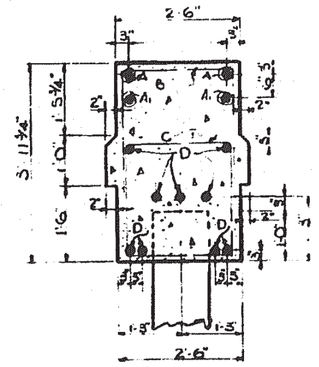

SECTION A-A

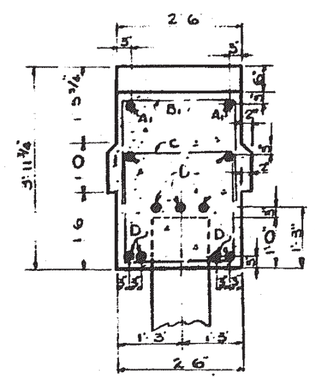

SECTION B-B

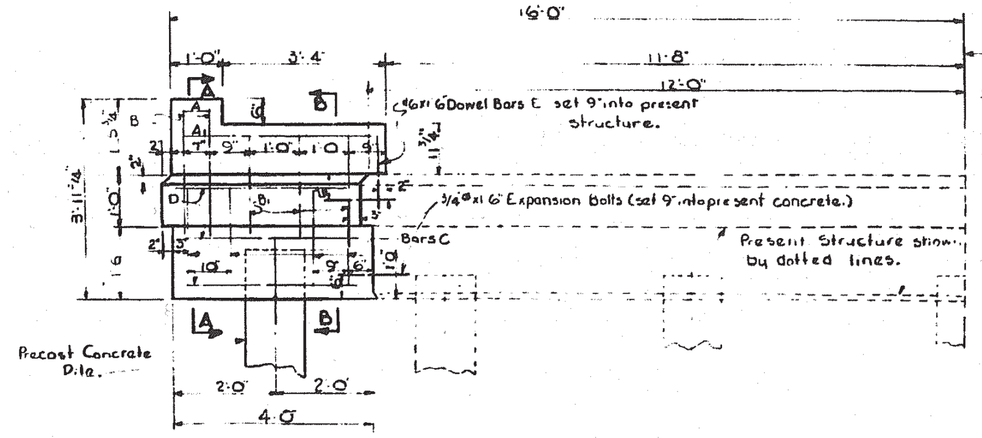

ELEVATION

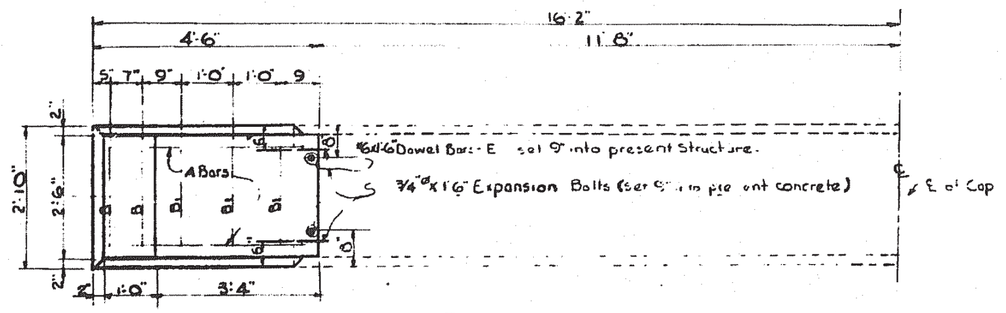

PLAN

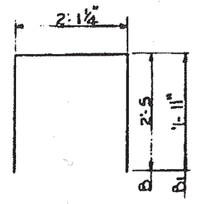

BARS B & B1

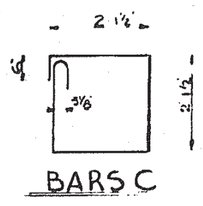

BARS C

BILL OF STEEL

Bar	Size	No.	Length
A	#5	4	3'
A1	#5	4	5'-10"
B	#5	4	7'-0"
B1	#5	6	6'-0"
C	#5	8	9'-6"
D	#7	18	5'-6"
E	#6	4	1'-6"

ESTIMATED QUANTITIES
(Each Bent)

Concrete Class "A" 2.7 Cu. Yds.
Reinforcing Steel 303 lbs.

Required 8 3/4 ϕ x 1'-6" Expansion Bolts

BENT

GENERAL NOTES

Specifications: Standard Road & Bridge Specifications of the Tennessee Department of Highways.
Concrete: To be Class "A".
Reinforcing Steel: To be intermediate or hard grade.
Forms & Finish: See Specifications.
Design: AASHO Specifications - 1961
Piles: To be precast concrete piles.
Loading: H20 S16 44

STATE OF TENNESSEE
DEPARTMENT OF HIGHWAYS
NASHVILLE

STANDARD

8'-0" WIDENING FOR 26'-0" CLEAR SPAN
CONCRETE ABUTMENT & BENT
CONCRETE PILE BENT TYPE
1962

DESIGNED BY
DRAWN BY John Tawey
CHECKED BY

DATE 11-14-62
DATE
DATE

CORRECT

APPROVED

K-15-76