Index Of Sheets
Resurfacing
See Sheet 1A

# STATE OF TENNESSEE
# DEPARTMENT OF TRANSPORTATION
# BUREAU OF ENGINEERING

| TENN. | YEAR | SHEET NO. |
|---|---|---|
| | 2016 | 1 |
| FED. AID PROJ. NO. | NH-I-65-3(124) | |
| STATE PROJ. NO. | 19010-8165-44 | |

# DAVIDSON COUNTY

## INTERSTATE NO. 65

FROM BRIDGE OVER CUMBERLAND RIVER (L.M. 10.45)
TO TRINITY LANE (L.M. 11.74)

RESURFACING

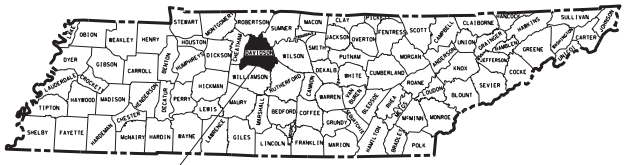


NO EXCLUSIONS

STATE HIGHWAY NO. I-65 F.A.H.S. NO. I-65

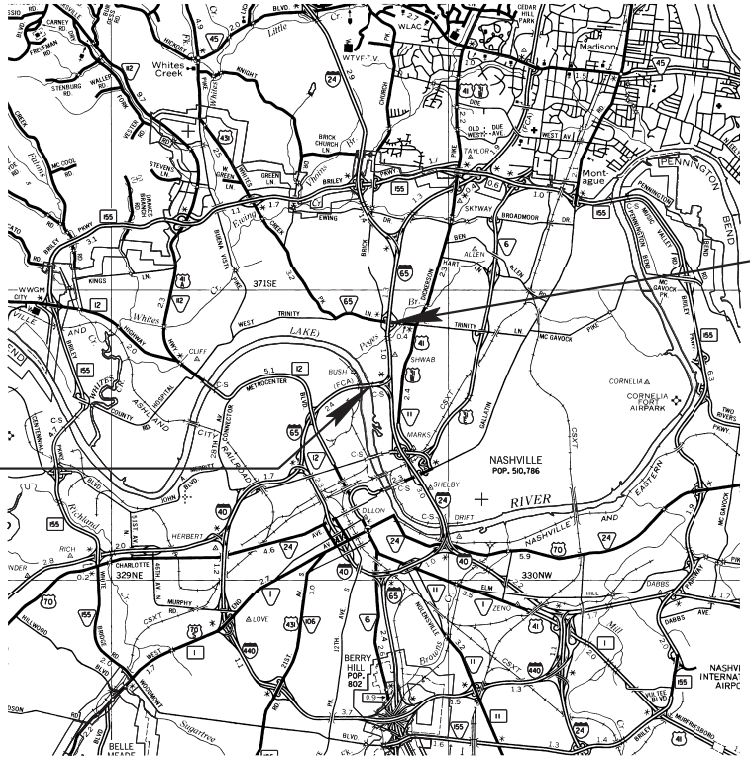


SCALE: 1"= 1 MILE

PROJECT TO BE LET WITH
DAVIDSON CO. I-24
PIN 104523.01

19010-8165-44
END PROJ. NO. NH-I-65-3(124)
(L.M. 11.74)

19010-8165-44
BEGIN PROJ. NO. NH-I-65-3(124)
(L.M. 10.45)

UNOFFICIAL SET
NOT FOR BIDDING

SEALED BY

APPROVED: Paul D. Degges
PAUL D. DEGGES, CHIEF ENGINEER

DATE:

APPROVED:
JOHN SCHROER, COMMISSIONER

| TRAFFIC DATA | |
|---|---|
| ADT (2016) | 168420 |
| ADT (2036) | 206820 |
| DHV (2036) | 18614 |
| D | 60 - 40 |
| T (ADT) | 16 % |
| T (DHV) | 11 % |
| V | 55 MPH |

U.S. DEPARTMENT OF TRANSPORTATION
FEDERAL HIGHWAY ADMINISTRATION

APPROVED:

DIVISION ADMINISTRATOR DATE

## SPECIAL NOTES

PROPOSALS MAY BE REJECTED BY THE COMMISSIONER IF ANY OF THE UNIT PRICES CONTAINED THEREIN ARE OBVIOUSLY UNBALANCED, EITHER EXCESSIVE OR BELOW THE REASONABLE COST ANALYSIS VALUE.

THIS PROJECT TO BE CONSTRUCTED UNDER THE STANDARD SPECIFICATIONS OF THE TENNESSEE DEPARTMENT OF TRANSPORTATION DATED JANUARY 1, 2015 AND ADDITIONAL SPECIFICATIONS AND SPECIAL PROVISIONS CONTAINED IN THE PLANS AND IN THE PROPOSAL CONTRACT.

CIVIL ENGINEERING MANAGER 1 ASO HAWRAMI, P.E.

DESIGNER WALKER TRENT/TERRY ARNOLD CHECKED BY DARRELL GRAY

P.E. NO. 98034-4194-04

PIN NO. 106940.01

PROJECT LENGTH 1.29 MILES
TOTAL LANE MILES RESURFACED 8.8 MILES

05-AUG-2015 14:09
\\JO3WF01.dot.state.tn.us\03Shared\SURVEY\DESIGN\Resurfacing Plans\2016Interstate\DavidsonCo.I-65LM10.45-LM11.74\Title Sheet-INFO.sht

| TYPE | YEAR | PROJECT NO. | SHEET NO. |
|---|---|---|---|
| RESURF | 2016 | NH-I-65-3(124) | 1A |


| SHEET NO. | DESCRIPTION |
|---|---|
| 1 | TITLE SHEET |
| 1A | INDEX AND STANDARD DRAWINGS |
| 2 | ESTIMATED ROADWAY QUANTITIES |
| 2A | TYPICAL SECTIONS AND PAVEMENT SCHEDULE |
| 3 | GENERAL NOTES |
| 4 | SPECIAL NOTES |
| B1 | BRIDGE TABULATION AND ESTIMATED QUANTITIES |
| B2 | EXPANSION JOINT AND PAVEMENT AT BRIDGE END REPAIR DETAILS |
| B3 | THIN EPOXY OVERLAY NOTES |


**"NO PROJECT COMMITMENTS SHEET INCLUDED IN THIS SET OF PLANS"**

## STANDARD ROADWAY DRAWINGS

| DWG. NO. | REV. | DESCRIPTION |
|---|---|---|
| **ROADWAY DESIGN STANDARDS** | | |
| RD-A-1 | 12-18-99 | STANDARD ABBREVIATIONS |
| RD-L-1 | 10-26-94 | STANDARD LEGEND |
| RD-L-5 | 05-01-08 | STANDARD LEGEND FOR EROSION PREVENTION AND SEDIMENT CONTROL |
| RD01-TS-5 | 10-15-02 | DESIGN STANDARDS FREEWAYS WITH DEPRESSED MEDIAN |
| **TRAFFIC CONTROL APPURTENANCES** | | |
| T-FAB-1 | 05-27-97 | FLASHING YELLOW ARROW BOARD |
| T-M-5 | 04-23-13 | MARKING DETAILS FOR EXPRESSWAYS AND FREEWAYS |
| T-M-6 | 6-22-12 | MARKING DETAIL FOR EXPRESSWAY & FREEWAY INTERCHANGES |
| T-M-7 | 1-12-12 | GORE MARKING DETAILS FOR EXPRESSWAY & FREEWAY INTERCHANGES |
| T-M-8 | 01-12-12 | MARKING DETAILS FOR EXPRESSWAYS AND FREEWAYS |
| T-M-9 | 11-01-11 | MARKING DETAILS FOR RAMP INTERSECTIONS |
| T-M-15 | | ASPHALT SHOULDER RUMBLE STRIP INSTALLATION DETAILS FOR INTERSTATE AND ACCESS CONTROLLED ROUTES |
| T-WZ-10 | 04-02-12 | ADVANCE ROAD WORK SIGNING ON HIGHWAYS AND FREEWAYS |
| T-WZ-11 | 03-13-09 | ONE LANE CLOSURE DETAIL ON DIVIDED HIGHWAYS |
| T-WZ-15 | 04-02-12 | INTERIOR LANE CLOSURE ON FREEWAYS OR EXPRESSWAYS |
| T-WZ-16 | 03-13-09 | LANE SHIFT ON DIVDED HIGHWAYS AND FREEWAYS |
| T-WZ-18 | 03-13-09 | SHOULDER CLOSURE DETAIL FOR FREEWAYS AND DIVIDED HIGHWAYS |
| T-WZ-21 | 03-15-11 | LANE CLOSURE WITH LEFT HAND MERGE AND LANE SHIFT |

**UNOFFICIAL SET**

**NOT FOR BIDDING**

SEALED BY

STATE OF TENNESSEE
DEPARTMENT OF TRANSPORTATION

INDEX AND STANDARD DRAWINGS

05-AUG-2015 14:0
\\J03WF01.dot.state.tn.us\03Shared\SURVEY\DESIGN\Resurfacing Plans\2016Interstate\DavidsonCo.I-65\LM0.45-LM1.741\1A Index and Standard Drawings-INFO.dgn

| TYPE | YEAR | PROJECT NO. | SHEET NO. |
|---|---|---|---|
| RESURF | 2016 | NH-I-65-3(124) | 2 |

## ESTIMATED ROADWAY QUANTITIES

| | ITEM NO. | DESCRIPTION | UNIT | QUANTITY |
|---|---|---|---|---|
| 1 | 307-03.08 | ASPHALT CONCRETE MIX (PG76-22) (BPMB-HM) GRADING B-M2 | TON | 3000 |
| | 403-01 | BITUMINOUS MATERIAL FOR TACK COAT (TC) | TON | 75 |
| | 411-03.09 | ACS MIX(PG76-22) THIN LIFT CS ASPHALT | TON | 3309 |
| 2,3 | 411-03.23 | OGFC SURFACE MIX (PG76-22) | TON | 5599 |
| | 411-12.01 | SCORING SHOULDERS (CONTINUCUS) (16IN WIDTH) | L.M. | 5.2 |
| | 415-01.01 | COLD PLANING BITUMINOUS PAVEMENT | TON | 6681 |
| | | | | |
| 4 | 712-01 | TRAFFIC CONTROL | LS | 0.5 |
| | 712-04.01 | FLEXIBLE DRUMS (CHANNELIZING) | EACH | 300 |
| | 712-05.01 | WARNING LIGHTS (TYPE A) | EACH | 4 |
| 5,6 | 712-06 | SIGNS (CONSTRUCTION) | S.F. | 746 |
| 7 | 712-06.16 | SIGNS (CONSTRUCTION)(REDUCED SPEED WARNING) | EACH | 2 |
| | 712-08.03 | ARROW BOARD (TYPE C) | EACH | 5 |
| | 713-16.01 | CHANGEABLE MESSAGE SIGN UNIT | EACH | 2 |
| | | | | |
| 8 | 716-01.12 | RAISED PVMT MARKERS (MONO-DIRECTIONAL) (1 COLOR LENS) | EACH | 975 |
| | 716-01.23 | SNWPLWBLE PVMT MRKRS (BI-DIR)(2 COLOR) | EACH | 1227 |
| | 716-01.30 | REMOVAL OF SNOWPLOWABLE REFLECTIVE MARKER | EACH | 2202 |
| 9 | 716-02.04 | PLASTIC PAVEMENT MARKING(CHANNELIZATION STRIPING) | S.Y. | 417 |
| 9 | 716-02.06 | PLASTIC PAVEMENT MARKING (TURN LANE ARROW) | EACH | 3 |
| 9 | 716-04.01 | PLASTIC PAVEMENT MARKING (STRAIGHT-TURN ARROW) | EACH | 3 |
| 10 | 716-05.20 | PAINTED PAVEMENT MARKING (6" LINE) | L.M. | 12.7 |
| 11 | 716-12.02 | ENHANCED FLATLINE THERMO PVMT MRKNG (6IN LINE) | L.M. | 6.2 |
| 11 | 716-12.03 | ENHANCED FLATLINE THERMO PVMT MRKNG (8IN BARRIER LINE) | L.F. | 5979 |
| 11 | 716-12.05 | ENHANCED FLATLINE THERMO PVMT MRKNG (6IN DOTTED LINE) | L.F. | 19309 |
| | 717-01 | MOBILIZATION | LS | 0.5 |

**THERE ARE NO UTILITY ADJUSTMENTS ON THIS PROJECT**

## ESTIMATED BRIDGE QUANTITIES

| ITEM NO. | DESCRIPTION | UNIT | QUANTITY |
|---|---|---|---|
| 604-10.53 | CONCRETE REPAIRS (PARTIAL DEPTH OF APPROACH PVT.) | S.Y. | 150 |
| 617-04.01 | TYPE 1 THIN EPOXY OVERLAY(EPOXY-URETHANE) | S.Y. | 838 |
| 604-10.56 | CONCRETE OVELAYED BRIDGE DECK REPAIR (PARTIAL) | S.Y. | 690 |
| 604-10.34 | CONCRETE OVELAYED BRIDGE DECK REPAIR (FULL) | S.Y. | 700 |
| 604-10.44 | EXPANSION JOINT REPAIR | L.F. | 463 |
| 617-01 | BRIDGE DECK SEALANT | S.Y. | 4242 |

## SIGNS CONSTRUCTION 712-06

| QUANTITY | M.U.T.C.D. NO. | DESCRIPTION | SIZE | 712-06 S.F. |
|---|---|---|---|---|
| 6 | G20-1 | ROAD WORK NEXT 2 MILES | 48 x 24 | 48 |
| 6 | G20-2 | END ROAD WORK | 48 x 24 | 48 |
| 6 | W20-1 | ROAD WORK 1 MILE | 48 x 48 | 96 |
| 4 | W20-5R | RIGHT LANE CLOSED ½ MILE | 48 x 48 | 64 |
| 4 | W20-5L | LEFT LANE CLOSED ½ MILE | 48 x 48 | 64 |
| 2 | W20-1 | ROAD WORK AHEAD | 48 x 48 | 32 |
| 2 | W21-1 | GROOVED PAVEMENT - PORTABLE | 48 x 48 | 32 |
| 4 | W4-2R | RIGHT LANE ENDS SYMBOL | 48 x 48 | 64 |
| 4 | W4-2L | LEFT LANE ENDS SYMBOL | 48 x 48 | 64 |
| 2 | W20-7a | FLAGGER SYMBOL - PORTABLE | 48 x 48 | 32 |
| 2 | W16-2 | SUPPLEMENTAL PLATE - PORTABLE | 30 x 24 | 10 |
| 6 | W8-9a | SHOULDER DROP-OFF - PORTABLE | 48 x 48 | 96 |
| 6 | W8-11 | UNEVEN LANES - PORTABLE | 48 x 48 | 96 |
| | | TOTAL S.F. | | 746 |

## FOOTNOTES

1. TO BE USED AS DIRECTED BY THE ENGINEER FOR SPOT LEVELING.
2. FOR MATERIAL TRANSFER DEVICE, SEE SPECIAL PROVISION NO. 407G.
3. FOR BITUMINOUS PLANT MIX OPEN GRADED COURSE, SEE SPECIAL PROVISION 411OGFC.
4. THE CONTRACTOR SHALL COMPLY WITH SECTION 712 OF THE STANDARD SPECIFICATIONS FOR ROAD AND BRIDGE CONSTRUCTION REGARDING TEMPORARY TRAFFIC CONTROL AND THE CURRENT EDITION OF THE MANUAL ON UNIFORM TRAFFIC CONTROL DEVICES.
5. IN THE EVENT THAT A CONSTRUCTION AND/OR REGULATORY SIGN IS TEMPORARILY DESIGNATED NOT IN USE DURING THE CONSTRUCTION PHASE OF A PROJECT, THE CONTRACTOR SHALL CHOOSE A SIGN COVERING METHOD FROM A DESIGNATED LIST OF METHODS ACCEPTED BY THE DEPARTMENT. SAID SIGN COVERING METHOD SHALL BE SELECTED FROM QUALIFIED PRODUCTS LIST 10, SECTION D OR APPROVED BY THE DIVISION OF MATERIALS AND TEST AND SHALL BE USED TO COVER THESE SIGNS. NO OTHER METHOD FOR SIGN COVERING WILL BE ALLOWED. TEMPORARY SIGN COVERINGS SHALL NOT BE PAID FOR DIRECTLY BUT SHALL BE INCLUDED IN THE PRICE BID FOR ITEM NO. 712-06 SIGNS (CONSTRUCTION).
6. ALL ADVANCED WARNING SIGNS SHOULD BE DOUBLE INDICATED AS PER MUTCD STANDARDS.
7. ITEM TO BE USED ONLY WHEN THE CONTRACTOR ESTABLISHES A REDUCED SPEED LIMIT WITHIN THE PROJECT CONSTRUCTION WORK ZONE LIMITS. ITEM INCLUDES SIGN FACE, SUPPORTS, AND TWO TYPE "B" FLASHERS PER THE STANDARD SPECIFICATIONS. THE CONTRACTOR SHALL BE RESPONSIBLE FOR TURNING ON THE TYPE "B" FLASHERS WHEN WORKERS ARE IN THE CONSTRUCTION WORK ZONE AND TURNING THEM OFF WHEN WORKERS ARE NO LONGER IN THE CONSTRUCTION WORK ZONE.
8. 975 EA MONO DIRECTIONAL MARKERS ARE NEEDED FOR DILINEATION OF NARROW BRIDGES AS PER STD T-M-8.
9. THE CONTRACTOR MAY ELECT TO SUBSITUTE PREFORMED PLASTIC FOR THERMOPLASTIC. PREFORMED PLASTIC SHALL BE PAID FOR AT THE SAME UNIT PRICE AS BID FOR THERMOPLASTIC.
10. FOR TEMPORARY PAVEMENT MARKING ON INTERMEDIATE LAYERS AND COLD PLANED SURFACE.
11. CONTRACTOR SHALL USE THE RIBBON METHOD FOR APPLICATION.

## BRIDGE NOTES

| LOCATION | LENGTH (FT.) | RECOMMENDATION |
|---|---|---|
| L.M. 10.62 | 182 | PAVE WITH TOP COAT |
| L.M. 10.74 | 243 | PROVIDE DECK REPAIR ITEM-SEAL WITH SYSTEM "A" OR "B" MEMBRANE |
| L.M. 11.43 | 54 | PAVE WITH PLANS QUANTITY |
| L.M. 11.70 | 183 | PROVIDE DECK REPAIR ITEM-SEAL WITH SYSTEM "A" OR "B" MEMBRANE |

## SPECIAL NOTE

THE CONTRACTOR SHOULD TAKE EXTREME CARE WHEN COLD PLANING THE EXISTING ASPHALT OFF BRIDGE DECK SO AS TO NOT TO DAMAGE THE EXISTING DECK SEALANT AND/OR EXPANSION JOINT MEMBERS (STEEL PLATES, BARS, AND/OR HEADERS). IF DAMAGE DOES OCCUR, THE CONTRACTOR SHALL BE RESPONSIBLE FOR NECESSARY REPAIRS ON ALL DAMAGED MEMBERS TO THE SATISFACTION OF THE PROJECT ENGINEER AT NO ADDITIONAL COST.

**UNOFFICIAL SET**

**NOT FOR BIDDING**

SEALED BY

STATE OF TENNESSEE
DEPARTMENT OF TRANSPORTATION

ESTIMATED ROADWAY QUANTITIES

05-AUG-2015 14:0
\\J03WF01.dot.state.tn.us\J03Shared\SURVEY\DESIGN\Resurfacing Plans\2016Interstate\DavidsonCo\I-65\LM10.45-LM17.41\2 Estimated Roadway Quantities-INFO.dgn

| TYPE | YEAR | PROJECT NO. | SHEET NO. |
|---|---|---|---|
| RESURF. | 2016 | NH-I-65-3(124) | 2A |
| | | | |
| | | | |
| | | | |

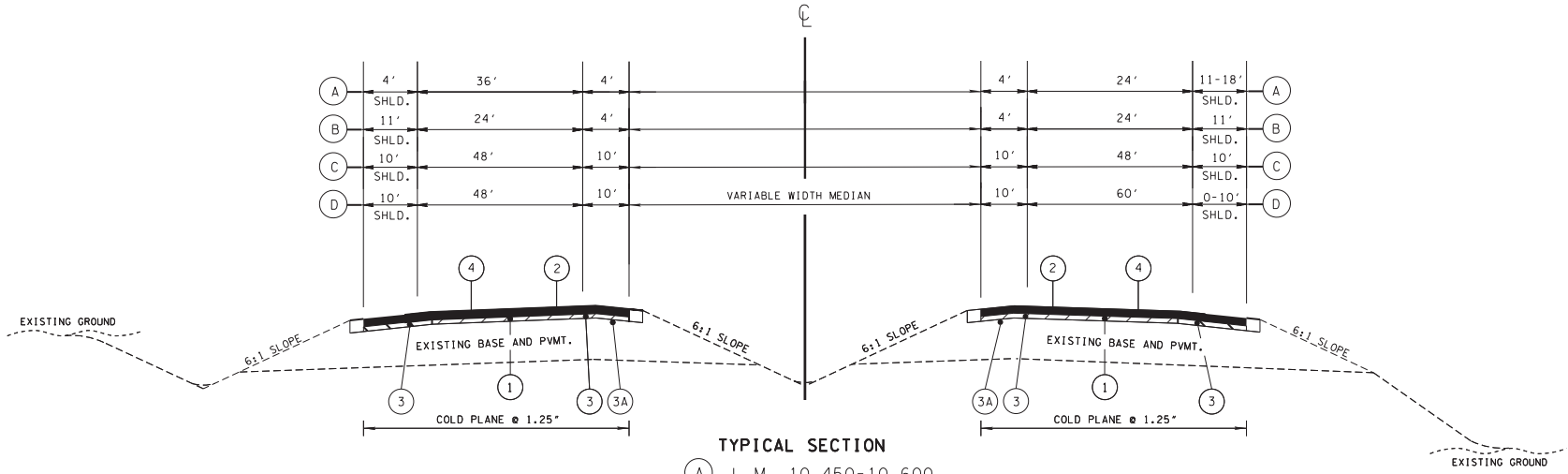


I-65 SOUTHBOUND

I-65 NORTHBOUND

## TYPICAL SECTION

(A) L.M. 10.450-10.600

(B) L.M. 10.600-10.900

(C) L.M. 10.900-11.600

(D) L.M. 11.600-11.740

| PROPOSED PAVEMENT SCHEDULE | |
|---|---|
| (1) SURFACE @ (65.0 LB/S.Y.)<br>411-03.09 ACS MIX (PG76-22) THIN LIFT CS ASPHALT | (3A) TACK COAT @ 0.10 GAL/SY (COLD PLANED SURFACE)<br>403-01 BITUMINOUS MATERIAL FOR TACK COAT (TC) |
| (2) SURFACE @ 1.25" THICK (110.0 LB/S.Y.)<br>411-03.23 OGFC SURFACE MIX (PG76-22) | (4) COLD PLANING @ 1.25" THICK<br>415-01.01 COLD PLANING BITUMINOUS PAVEMENT (TON) |
| (3) TACK COAT @ 0.07 GAL/SY (GENERAL USE)<br>403-01 BITUMINOUS MATERIAL FOR TACK COAT (TC) | |

**UNOFFICIAL SET**

**NOT FOR BIDDING**

SEALED BY

SPECIAL NOTE:

ALL SHOULDERS WILL BE DEGRASSED/CLIPPED AND CLEANED OF ALL VEGETATION, GRASS AND DEBRIS. SEE SPECIAL NOTES. ALL COST TO BE INCLUDED IN OTHER ITEMS OF WORK.

STATE OF TENNESSEE
DEPARTMENT OF TRANSPORTATION

TYPICAL SECTIONS AND PAVEMENT SCHEDULE

05-AUG-2015 14:11
\\J03WF01.tdot.state.tn.us\03Shared\SURVEY\DESIGN\Resurfacing Plans\2016Interstate\DavidsonCo\I-65LM10.45-LM11.74\2A Typical Sections and Pavement Schedule-INFO.dgn

| TYPE | YEAR | PROJECT NO. | SHEET NO. |
|---|---|---|---|
| RESURF | 2016 | NH-I-65-3(124) | 3 |

# GENERAL NOTES

## MISCELLANEOUS

(1) NOTHING IN THE GENERAL NOTES OR SPECIAL PROVISIONS SHALL RELIEVE THE CONTRACTOR FROM HIS RESPONSIBILITIES TOWARD THE SAFETY AND CONVENIENCE OF THE GENERAL PUBLIC AND THE RESIDENTS ALONG THE PROPOSED CONSTRUCTION AREA

## PAVEMENT MARKINGS

### TEMPORARY PAVEMENT MARKING ON INTERMEDIATE LAYERS

(2) TEMPORARY PAVEMENT LINE MARKINGS ON INTERMEDIATE LAYERS OF PAVEMENT SHALL BE REFLECTIVE TAPE OR REFLECTORIZED PAINT INSTALLED TO PERMANENT STANDARDS AT THE END OF EACH DAYS WORK. SHORT, UNMARKED SECTIONS SHALL NOT BE ALLOWED. THESE MARKINGS WILL BE MEASURED AND PAID FOR UNDER ITEM NO. 716-05.20, PAINTED PAVEMENT MARKING (6" LINE), L.M.

### FINAL PAVEMENT MARKING IF 6" ENHANCED FLATLINE THERMOPLASTIC IS USED

(3) PERMANENT PAVEMENT LINE MARKINGS SHALL BE 6" ENHANCED FLATLINE THERMOPLASTIC INSTALLED TO PERMANENT STANDARDS AT THE END OF EACH DAY'S WORK. SHORT UNMARKED SECTIONS SHALL NOT BE ALLOWED. PAVEMENT MARKINGS WILL BE MEASURED AND PAID FOR UNDER ITEM NO. 716-12.02, ENHANCED FLATLINE THERMO PVMT MRKNG (6IN LINE), L.M. THE CONTRACTOR SHALL HAVE THE OPTION OF USING REFLECTORIZED PAINT INSTALLED TO PERMANENT STANDARDS AT THE END OF EACH DAY'S WORK AND THEN INSTALLING THE PERMANENT MARKINGS AFTER THE PAVING OPERATION IS COMPLETED. THE TEMPORARY MARKINGS FOR THE FINAL SURFACE WILL NOT BE MEASURED AND PAID FOR DIRECTLY, BUT THE COSTS ARE TO BE INCLUDED IN THE PRICE BID FOR THE PERMANENT MARKINGS.

### FINAL PAVEMENT MARKING IF 8" ENHANCED FLATLINE THERMOPLASTIC IS USED

(4) PERMANENT PAVEMENT LINE MARKINGS SHALL BE 8" ENHANCED FLATLINE THERMOPLASTIC INSTALLED TO PERMANENT STANDARDS AT THE END OF EACH DAY'S WORK. SHORT UNMARKED SECTIONS SHALL NOT BE ALLOWED. PAVEMENT MARKINGS WILL BE MEASURED AND PAID FOR UNDER ITEM NO. 716-12.03, ENHANCED FLATLINE THERMO PVMT MRKNG (8IN BARRIER LINE), L.F. THE CONTRACTOR SHALL HAVE THE OPTION OF USING REFLECTORIZED PAINT INSTALLED TO PERMANENT STANDARDS AT THE END OF EACH DAY'S WORK AND THEN INSTALLING THE PERMANENT MARKINGS AFTER THE PAVING OPERATION IS COMPLETED. THE TEMPORARY MARKINGS FOR THE FINAL SURFACE WILL NOT BE MEASURED AND PAID FOR DIRECTLY, BUT THE COSTS ARE TO BE INCLUDED IN THE PRICE BID FOR THE PERMANENT MARKINGS.

### FINAL PAVEMENT MARKING IF 6" ENHANCED FLATLINE THERMOPLASTIC IS USED

(5) PERMANENT PAVEMENT LINE MARKINGS SHALL BE 6" ENHANCED FLATLINE THERMOPLASTIC INSTALLED TO PERMANENT STANDARDS AT THE END OF EACH DAY'S WORK. SHORT UNMARKED SECTIONS SHALL NOT BE ALLOWED. PAVEMENT MARKINGS WILL BE MEASURED AND PAID FOR UNDER ITEM NO. 716-12.05, ENHANCED FLATLINE THERMO PVMT MRKNG (6IN DOTTED LINE), L.M. THE CONTRACTOR SHALL HAVE THE OPTION OF USING REFLECTORIZED PAINT INSTALLED TO PERMANENT STANDARDS AT THE END OF EACH DAY'S WORK AND THEN INSTALLING THE PERMANENT MARKINGS AFTER THE PAVING OPERATION IS COMPLETED. THE TEMPORARY MARKINGS FOR THE FINAL SURFACE WILL NOT BE MEASURED AND PAID FOR DIRECTLY, BUT THE COSTS ARE TO BE INCLUDED IN THE PRICE BID FOR THE PERMANENT MARKINGS.

## PAVEMENT

### PAVING

(6) THE CONTRACTOR SHALL BE REQUIRED TO COLD PLANE AND PAVE IN THE DIRECTION OF TRAFFIC.

### RESURFACING

(7) IN ALL CASES, THE LENGTH OF THE PAVEMENT TRANSITION, THE THICKNESS AND WIDTH OF THE RESURFACING AND ANY ADDITIONAL PAVEMENT MATERIALS SHALL BE AS DIRECTED BY THE TDOT ENGINEER.

## CONSTRUCTION WORK ZONE & TRAFFIC CONTROL

(8) ADVANCED WARNING SIGNS SHALL NOT BE DISPLAYED MORE THAN FORTY-EIGHT (48) HOURS BEFORE PHYSICAL CONSTRUCTION BEGINS. SIGNS MAY BE ERECTED UP TO ONE WEEK BEFORE NEEDED, IF THE SIGN FACE IS FULLY COVERED.

(9) IF THE CONTRACTOR MOVES OFF THE PROJECT, HE SHALL COVER OR REMOVE ALL UNNEEDED SIGNS AS DIRECTED BY THE ENGINEER. COSTS OF REMOVAL, COVERING, AND REINSTALLING SIGNS SHALL NOT BE MEASURED AND PAID FOR SEPARATELY, BUT ALL COSTS SHALL BE INCLUDED IN THE ORIGINAL UNIT PRICE BID FOR ITEM NO 712-06, SIGNS (CONSTRUCTION) PER SQUARE FOOT.

(10) A LONG TERM BUT SPORADIC USE WARNING SIGN, SUCH AS A FLAGGER SIGN, MAY REMAIN IN PLACE WHEN NOT REQUIRED PROVIDED THE SIGN FACE IS FULLY COVERED.

(11) TRAFFIC CONTROL DEVICES SHALL NOT BE DISPLAYED OR ERECTED UNLESS RELATED CONDITIONS ARE PRESENT NECESSITATING WARNING.

(12) USE OF BARRICADES, PORTABLE BARRIER RAILS, VERTICAL PANELS, AND DRUMS SHALL BE LIMITED TO THE IMMEDIATE AREAS OF CONSTRUCTION WHERE A HAZARD IS PRESENT. THESE DEVICES SHALL NOT BE STORED ALONG THE ROADWAY WITHIN THIRTY (30) FEET OF THE EDGE OF THE TRAVELED WAY BEFORE OR AFTER USE UNLESS PROTECTED BY GUARDRAIL, BRIDGE RAIL, AND/OR BARRIERS INSTALLED FOR OTHER PURPOSES FOR ROADWAYS WITH CURRENT ADT'S LESS THAN 1500 AND DESIGN SPEED OF LESS THAN 60 MPH. THIS DISTANCE SHALL INCREASE TO FORTY-FIVE (45) FEET FOR ROADWAYS WITH CURRENT ADT'S OF 1500 OR GREATER AND DESIGN SPEED OF 60 MPH OR GREATER OR ON THE OUTSIDE OF A HORIZONTAL CURVE. THESE DEVICES SHALL BE REMOVED FROM THE CONSTRUCTION WORK ZONE WHEN THE ENGINEER DETERMINES THEY ARE NO LONGER NEEDED. WHERE THERE IS INSUFFICIENT RIGHT-OF-WAY TO PROVIDE FOR THIS REQUIRED SETBACK, THE CONTRACTOR SHALL DETERMINE THE ALTERNATE LOCATIONS AND REQUEST THE ENGINEER'S APPROVAL TO USE THEM.

(13) THE CONTRACTOR SHALL NOT BE PERMITTED TO PARK ANY VEHICLES OR CONSTRUCTION EQUIPMENT DURING PERIODS OF INACTIVITY, WITHIN THIRTY (30) FEET OF THE EDGE OF PAVEMENT WHEN THE LANE IS OPEN TO TRAFFIC UNLESS PROTECTED BY GUARDRAIL, BRIDGE RAIL, AND/OR BARRIERS INSTALLED FOR OTHER PURPOSES FOR ROADWAYS WITH CURRENT ADT'S LESS THAN 1500 AND DESIGN SPEED OF LESS THAN 60 MPH. THIS DISTANCE SHALL BE INCREASED TO FORTY-FIVE (45) FEET FOR ROADWAYS WITH CURRENT ADT'S OF 1500 OR GREATER AND DESIGN SPEED OF 60 MPH OR GREATER OR ON THE OUTSIDE OF A HORIZONTAL CURVE. PRIVATELY OWNED VEHICLES SHALL NOT BE ALLOWED TO PARK WITHIN THIRTY (30) FEET OF A OPEN TRAFFIC LANE AT ANY TIME UNLESS PROTECTED AS DESCRIBED ABOVE FOR ROADWAYS WITH CURRENT ADT'S LESS THAN 1500 AND DESIGN SPEED OF LESS THAN 60 MPH. THIS DISTANCE SHALL BE INCREASED TO FORTY-FIVE (45) FEET FOR ROADWAYS WITH CURRENT ADT'S OF 1500 OR GREATER AND DESIGN SPEED OF 60 MPH OR GREATER OR ON THE OUTSIDE OF A HORIZONTAL CURVE.. WHERE THERE IS INSUFFICIENT RIGHT-OF-WAY TO PROVIDE FOR THIS REQUIRED SETBACK, THE CONTRACTOR SHALL DETERMINE THE ALTERNATE LOCATIONS AND REQUEST THE ENGINEER'S APPROVAL TO USE THEM.

(14) ALL DETOUR AND CONSTRUCTION SIGNING SHALL BE IN STRICT ACCORDANCE WITH THE MANUAL ON UNIFORM TRAFFIC CONTROL DEVICES.

## EROSION PREVENTION AND SEDIMENT CONTROL

### LITTER, DEBRIS, WASTE, PETROLEUM

(15) THE CONTRACTOR SHALL ESTABLISH AND MAINTAIN A PROACTIVE METHOD TO PREVENT LITTER, CONSTRUCTION DEBRIS, AND CONSTRUCTION WASTES FROM ENTERING WATERS OF THE STATE/U.S. THESE MATERIALS WILL BE PICKED UP AND REMOVED FROM STORMWATER EXPOSURE PRIOR TO ANTICIPATED STORM EVENTS. AFTER USE, MATERIALS USED FOR EPSC WILL BE REMOVED FROM THE SITE.

(16) THE CONTRACTOR SHALL TAKE APPROPRIATE STEPS TO ENSURE THAT PETROLEUM PRODUCTS OR OTHER CHEMICAL POLLUTANTS ARE PREVENTED FROM ENTERING WATERS OF THE STATE/U.S. ALL EQUIPMENT REFUELING, SERVICING, AND STAGING AREAS SHALL COMPLY WITH ALL LOCAL, STATE, AND FEDERAL LAWS, RULES, REGULATIONS, AND ORDINANCES, INCLUDING THOSE OF THE NATIONAL FIRE PROTECTION ASSOCIATION (NFPA). APPROPRIATE CONTAINMENT MEASURES FOR THESE AREAS SHALL BE USED. ALL SPILLS MUST BE REPORTED TO THE APPROPRIATE AGENCY, AND MEASURES SHALL BE TAKEN IMMEDIATELY TO PREVENT THE POLLUTION OF WATERS OF THE STATE/U.S., INCLUDING GROUNDWATER, SHOULD A SPILL OCCUR.

UNOFFICIAL SET

NOT FOR BIDDING

SEALED BY

STATE OF TENNESSEE
DEPARTMENT OF TRANSPORTATION

GENERAL NOTES

05-AUG-2015 14:11
\\JJ03WF01.dot.state.tn.us\03Shared\SURVEY\DESIGN\Resurfacing Plans\2016Interstate\DavidsonCo\I-65\LM0.45-LM1.74\3_GeneralNotes-INFO.dgn

| TYPE | YEAR | PROJECT NO. | SHEET NO. |
|---|---|---|---|
| RESURF | 2016 | NH-I-65-3(124) | 4 |

# SPECIAL NOTES

## MISCELLANEOUS

(1) THE CONTRACTOR WILL BE REQUIRED TO PERFORM THE FOLLOWING WORK AND INCLUDE ALL COSTS THEREOF IN THE PRICES BID FOR OTHER ITEMS OF CONSTRUCTION:

1. REPAIR OF SHOULDERS AND DITCHES THROUGHOUT THE LENGTH OF THE PROJECT.
2. DEGRASS ALL SHOULDERS, MATERIAL SHALL BE PICKED UP AND REMOVED.
3. REMOVE ALL GARBAGE AND CONSTRUCTION DEBRIS FROM PROJECT.
4. CLEANING AND STRAIGHTENING ENDS OF EXISTING SIDEDRAINS AND CROSSDRAINS WHERE DIRECTED BY THE ENGINEER.

(2) THE CONTRACTOR SHALL TAKE APPROPRIATE STEPS, BEFORE CLEANING OUT, REPAIRING OR REMOVAL/REPLACEMENT OF SIDE DRAINS AND CROSS DRAINS, TO ENSURE THAT THE DRAINAGE FEATURES / WATERCOURSES ARE NOT STREAMS OR WETLANDS. IF THE CONTRACTOR / TDOT INSPECTOR IS UNSURE WHETHER THE DRAINAGE FEATURES ARE STREAMS OR WETLANDS, THE INSPECTOR SHALL CONTACT THE TDOT ENVIRONMENTAL DIVISION PERMITS SECTION TO OBTAIN THE APPROPRIATE PERMITS.

(3) THE CONTRACTOR SHALL TAKE EXTREME CARE WHEN WORKING AROUND EXISTING GUARDRAIL, HIGHWAY SIGNS, OR ANY DEPARTMENT OF TRANSPORTATION STRUCTURE TO AVOID DAMAGE DURING THE COURSE OF CONSTRUCTION. ANY DAMAGE WILL BE REPLACED OR REPAIRED AT HIS OWN EXPENSE.

## PAVEMENT MARKINGS

(4) THE CONTRACTOR IS TO PROVIDE THE LAYOUT OF ALL EXISTING PAVEMENT MARKINGS BEFORE BEGINNING THE RESURFACING PROJECT. EXISTING MARKINGS SHALL BE REFERENCED AS NEEDED TO ENSURE THAT ALL NEW MARKINGS ARE REPLACED IN THEIR CORRESPONDING LOCATIONS UNLESS OTHERWISE DIRECTED BY THE ENGINEER.

## PAVEMENT

## PAVING

(5) SURFACE TO BE CROWNED AS DIRECTED BY THE ENGINEER.

(6) ALL STRUCTURES (DRAINAGE STRUCTURES, MANHOLES, UTILITY BOXES, ETC.) SHALL HAVE A FINISHED GRADE COMPATIBLE WITH THE FINISHED GRADE OF THE ROADWAY.

## RESURFACING

(7) DURING COLD PLANING OPERATION, A MINIMUM OF ONE LANE OF TRAFFIC IN EACH DIRECTION WILL REMAIN OPEN.

(8) AFTER ANY COLD PLANING OPERATION, TEMPORARY STRIPING WILL BE REQUIRED BEFORE RETURNING TRAFFIC ONTO EXCAVATED ROADWAY.

(9) TRAFFIC WILL BE ALLOWED TO TEMPORARILY DRIVE ON THE MILLED SURFACE OF THE ROADWAY UNDER THE FOLLOWING CONDITIONS ONLY.

A. THE MILLED SURFACE IS FINE TEXTURED. THE FINE TEXTURE SHALL BE OBTAINED BY A MILLING MACHINE UTILIZING A MILLING HEAD WITH TEETH SPACING 3/8" OR LESS OPERATING AT LESS THAN 80 FEET PER MINUTE.

B. THE SURFACE SHALL BE SWEPT AND CLEANED OF ALL LOOSE MATERIALS.

C. THE DIFFERENCE IN ELEVATION BETWEEN THE MILLED SURFACE AND THE ADJACENT LANE SHALL NOT EXCEED 1 1/2 INCHES.

D. THE MILLED SURFACE SHALL BE PAVED WITHIN 48 HOURS.

E. RAIN OR INCLEMENT WEATHER IS NOT EXPECTED OR FORECASTED WITHIN 48 HOURS AFTER MILLING.

F. ALL APPLICABLE SIGNING IS INSTALLED IN ACCORDANCE WITH THE MUTCD SIGNING SHALL INCLUDE MOTORCYCLE WARNING SIGNS (TN-64) PLACED IN ADVANCE OF ANY MILLED AREAS.

G. IF RAVELING OR DETERIORATION OF THE MILLED SURFACE IS OCCURRING WHILE TRAFFIC IS DRIVING ON THE MILLED SURFACE, THEN THIS PRACTICE WILL NOT BE ALLOWED AND PAVING SHALL BE COMPLETED IMMEDIATELY AFTER MILLING.

H. ONLY ONE LANE IN EACH DIRECTION SHALL HAVE A MILLED SURFACE AT ONE TIME.

## CONSTRUCTION WORK ZONE & TRAFFIC CONTROL

(10) THE CONSTRUCTION SIGNS, FLAGMEN AND OTHER TRAFFIC CONTROL DEVICES WILL BE IN ACCORDANCE WITH THE CURRENT EDITION OF THE MANUAL ON UNIFORM TRAFFIC CONTROL DEVICES.

(11) ONE ADVANCE ROAD CONSTRUCTION AHEAD SIGN IS TO BE PLACED ON ALL SIDE ROADS PRIOR TO THEIR INTERSECTION WITH THE PROPOSED PROJECT. LOCATION TO BE DETERMINED IN THE FIELD BY THE ENGINEER OR CONTRACTORS SUPERINTENDENT.

## PAVEMENT EDGE DROP-OFF TRAFFIC CONTROL NOTES

(12) DIFFERENCES IN ELEVATION BETWEEN ADJACENT TRAFFIC LANES OR TRAFFIC LANE AND SHOULDER WHERE THE TRAFFIC LANE IS BEING USED BY TRAFFIC, CAUSED BY BASE, PAVING OR RESURFACING:

1. DIFFERENCES IN ELEVATION BETWEEN ADJACENT ROADWAY ELEMENTS GREATER THAN 0.75 INCH AND NOT EXCEEDING 2 INCHES:

a. WARNING SIGNS, UNEVEN PAVEMENT (W8-11) AND/OR SHOULDER DROP-OFF (W8-9A), SHALL BE PLACED IN ADVANCE OF AND THROUGHOUT THE EXPOSED AREA. MAXIMUM SPACING BETWEEN SIGNS SHALL BE 2,000 FEET WITH A MINIMUM OF 2 SIGNS PER EXPOSED AREA. WHERE UNEVEN PAVEMENT IS ENCOUNTERED, SIGNS SHALL BE PLACED ON EACH SIDE OF THE ROADWAY.

b. DIFFERENCES IN ELEVATION BETWEEN ADJACENT TRAFFIC LANES BEING UTILIZED BY TRAFFIC CAUSED BY ADDED PAVEMENT SHALL BE ELIMINATED WITHIN THREE WORKDAYS.

c. DIFFERENCES IN ELEVATION BETWEEN ADJACENT TRAFFIC LANES BEING UTILIZED BY TRAFFIC CAUSED BY COLD PLANING SHALL BE ELIMINATED WITHIN THREE WORKDAYS.

d. WHEN THE DIFFERENCE IN ELEVATION IS BETWEEN THE TRAFFIC LANE BEING UTILIZED BY TRAFFIC AND SHOULDER THE DIFFERENCE IN ELEVATION SHALL BE ELIMINATED WITHIN SEVEN WORKDAYS AFTER THE CONDITION IS CREATED.

## WORK RESTRICTIONS

(13) LANE CLOSURES ALLOWED BETWEEN 8:00 PM AND 5:00 AM. SEE SPECIAL PROVISION NO. 108B.

(14) BRIDGE AND RAMP REPAIR SHOULD BE DONE ON THE WEEKEND FROM 8:00 PM FRIDAY UNTIL 5:00 AM MONDAY.

UNOFFICIAL SET

NOT FOR BIDDING

SEALED BY

STATE OF TENNESSEE
DEPARTMENT OF TRANSPORTATION

SPECIAL NOTES

05-AUG-2015 14:12
\\J03WF01.tdot.state.tn.us\03Shared\SURVEY\DESIGN\Resurfacing Plans\2016Interstate\DavidsonCo\I-65\LM0.45-LM1.74\4 SpecialNotes-INFO.dgn

TENNESSEE D.O.T.
DESIGN DIVISION
FILE NO.

| TYPE | YEAR | PROJECT NO. | SHEET NO. |
|---|---|---|---|
| RESURF | 2015 | NH-I-65-3(124) | B1 |
| | | 19010-8165-44 | |
| BR REPAIR | | 19010-4165-04 | |
| | | | |

PIN 106940.01

## TABULATION OF BRIDGE RELATED WORK AND ESTIMATED QUANTITIES

| LOCATION OF BRIDGE AND BRIDGE NUMBER | REFERENCE DRAWINGS TO BE PRINTED WITH CONTRACT DRAWINGS | TYPE OF WORK | 604-10.56 CONCRETE OVERLAY BRIDGE DECK REPAIR (PARTIAL) SY | 604-10.34 CONCRETE OVERLAY BRIDGE DECK REPAIR (FULL) SY | 617-01 BRIDGE DECK SEALANT SY | 604-10.44 EXPANSION JOINT REPAIR LF | 617-04.01 TYPE 1 THIN OVERLAY (EPOXY-URETHANE) SY | 604-10.53 CONCRETE REPAIR (PARTIAL DEPTH OF APPROACH PAVEMENT) |
|---|---|---|---|---|---|---|---|---|
| 19-I65-10.74/ 124 19100240101 | | BRIDGE DECK REPAIR THIN EPOXY OVERLAY EXPANSION JOINT REPAIR | 10 | | | 131 | 838 | |
| 19-I65-11.70/ SR65 TRINITY LANE 19100650063 | M-339-94 M-339-95 M-339-96 M-339-99 STD-1-5 | BRIDGE DECK REPAIR THIN EPOXY OVERLAY PAVMNT AT BRIDGE END REPAIR EXPANSION JOINT REPAIR | 680 | 700 | 4242 | 332 | | 150 |
| | | | | | | | | |
| | | TOTAL | 690 | 700 | 4242 | 463 | 838 | 150 |

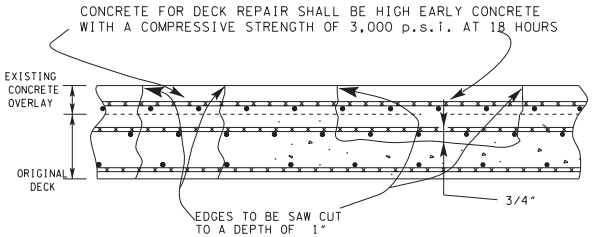


SKETCH SHOWING DECK REPAIR WITH CONCRETE OVERLAY

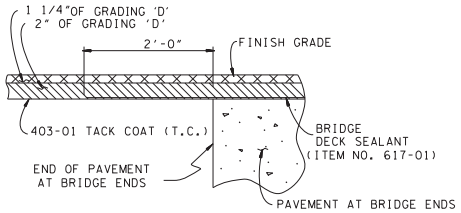


## BRIDGE DECK SEALANT DETAILS

NOTE: ON BRIDGE DECK WHERE THERE IS A BITUMINOUS JOINT OR WITH NO EXPANSION JOINT, MEMBRANE SHALL EXTEND 2'-0" OVER THE END OF THE PAVEMENT AT BRIDGE ENDS. IF THE DECK HAS A STEEL EXPANSION JOINT, THE MEMBRANE SHALL STOP AT THE STEEL EXPANSION JOINT.

NOTE: PRIOR TO THE PLACEMENT OF THE BRIDGE DECK SEAL MEMBRANE, THE BRIDGE SHALL BE CLEANED OF ALL LOOSE DEBRIS AND EXCESS DIRT. THE BRIDGE DECK SHALL ALSO BE CLEANED OF ALL OIL, DIESEL OR ANY OTHER PETROLEUM PRODUCT SPILLS AND DRY ACCORDING TO THE MANUFACTURE'S SPECIFICATIONS.

THE WATERPROOFING MEMBRANE SHALL BE APPLIED DIRECTLY TO THE BRIDGE DECK SURFACE ACCORDING TO THE MANUFACTURE'S SPECIFICATIONS. THE COST OF ALL THE MATERIALS NECESSARY FOR THE WATERPROOFING APPLICATION (WATERPROOFING MEMBRANE, PRIMER, MASTIC, ETC.) AND LABOR SHALL BE PAID FOR UNDER ITEM NO. 617-01 BRIDGE DECK SEALANT S.Y.

NOTE: PARTIAL DEPTH DECK REPAIR ONLY
REMOVE CONCRETE IN ALL DELAMINATED AREAS TO A DEPTH OF ¾" BELOW THE TOP BAR OF THE TOP MAT OF REINFORCING STEEL IN THE ORIGINAL DECK.

NOTE: PARTIAL AND FULL DEPTH DECK REPAIRS
ALL REINFORCING STEEL IN THE AREAS OF THE DECK REPAIRS SHALL BE COMPLETELY CLEANED. CLEANING SHALL BE DONE PRIOR TO PLACING NEW CONCRETE . AREAS OF CONCRETE REMOVAL SHALL BE DESIGNATED BY PERSONNEL FROM THE HEADQUARTERS, BRIDGE INSPECTION AND REPAIR OFFICE. INSPECTIONS TO DETERMINE AREAS OF DECK REPAIR SHALL BE SCHEDULE WITH THE BRIDGE REPAIR OFFICE AT LEAST (3) DAYS IN ADVANCE.
THE COST OF CONCRETE, CONCRETE REMOVAL, LABOR, CLEANING REBARS AND ANY MISCELLANEOUS MATERIAL REQUIRED SHALL BE PAID FOR UNDER
ITEM NO. 604-10.56 CONCRETE OVERLAYED BRIDGE DECK REPAIR (PARTIAL DEPTH), S.Y. AND
ITEM NO. 604-10.34 CONCRETE OVERLAYED BRIDGE DECK REPAIR (FULL DEPTH), S.Y.

NOTE: ITEM NO. 604-10.56, CONCRETE OVERLAYED BRIDGE DECK REPAIR (PARTIAL DEPTH)
ITEM NO. 604-10.34, CONCRETE OVERLAYED BRIDGE DECK REPAIR (FULL DEPTH)
SHALL BE BID THIS MAY BE INCREASED, DECREASED OR ELIMINATED BY THE ENGINEER.

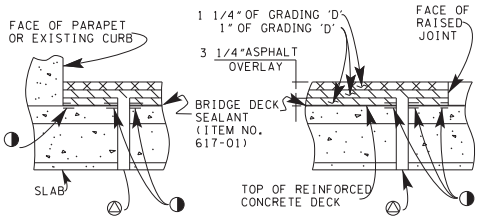


TYPICAL AT FACE OF EXISTING CURB OR NEW PARAPET

TYPICAL FOR NEW RAISED EXPANSION JOINTS

◑ MASTIC AS RECOMMENDED BY MANUFACTURER OF MEMBRANE. SEE STD. SPEC. ART. 906.04.

△ 1½" ø HOLE TO BE DRILLED BY THE CONTRACTOR NEAR FACE OF NEW PARAPETS OR EXISTING CURBS AT LOW POINTS.

BRIAN K. EGLI REGISTERED ENGINEER AGRICULTURE COMMERCE No. 107196 STATE OF TENNESSEE
08/04/15

NOTE: TRAFFIC CONTROL SHALL BE PROVIDED ON ROADWAY UNDERPASS DURING PARTIAL DEPTH DECK REPAIR OF OVERHEAD BRIDGE.

### POWER DRIVEN HAND TOOLS:

POWER DRIVEN HAND TOOLS USED FOR THE REMOVAL OF UNSOUND CONCRETE IN MAKING PARTIAL AND FULL DEPTH REPAIRS ARE SUBJECT TO THE FOLLOWING RESTRICTIONS: (1) PARTIAL DEPTH REPAIRS; PNEUMATIC HAMMERS HEAVIER THAN NOMINAL 60 lb. CLASS SHALL NOT BE USED. ALSO TRAFFIC CONTROL SHALL BE SET UP DURING PARTIAL DEPTH REPAIRS OVER TRAFFIC. (2) FULL DEPTH REPAIRS; PNEUMATIC HAMMERS HEAVIER THAN NOMINAL 90 lb. CLASS SHALL NOT BE USED. ALSO ALL DECK REPAIR OVER BEAMS WILL BE RESTRICTED TO 60 lb. PNEUMATIC HAMMERS. (3) CHIPPING HAMMERS OF THE 15 lb. CLASS SHALL BE USED TO REMOVE CONCRETE FROM BENEATH ANY REINFORCING STEEL.

### BRIDGE DECK REPAIR MATERIAL

IF OVERNIGHT LANE CLOSURES ARE PROVIDED FOR THIS PROJECT AND THE LANE CLOSURES ARE SUCH THAT TRAFFIC WILL BE KEPT OFF THE BRIDGE DECK WHERE DECK REPAIRS WILL BE MADE. THEN HIGH EARLY STRENGTH CONCRETE SHALL BE USED WITH A COMPRESSIVE STRENGTH OF 3,000 p.s.i. AT 18 HOURS. THE CONTRACTOR SHALL PROVIDE PROOF PRIOR TO BEGINNING WORK THAT PROPOSED CONCRETE MIX WILL OBTAIN REQUIRED PROPERTIES. PROOF SHALL BE PROVIDED BY AN INDEPENDENT TESTING COMPANY AND SUBMITTED TO THE MATERIAL AND TEST DIVISION OF TENNESSEE DEPARTMENT OF TRANSPORTATION FOR APPROVAL. THE MIX TO MEET THE REQUIREMENTS OF THE STANDARD SPECIFICATIONS CLASS "A". EXCEPT THE CEMENT SHALL BE A MINIMUM OF 714 lbs. A HIGH RANGE, WATER REDUCING ADMIXTURE (SUPERPLASTICIZER) SHALL BE USED SUBJECT TO THE APPROVAL OF AND THE CONCRETE SHALL ATTAIN A MINIMUM OF COMPRESSIVE STRENGTH OF 3,000 p.s.i. IN 18 HOURS. TRAFFIC SHALL NOT BE ALLOWED ON REPAIRED AREAS UNTIL THE CONCRETE HAS BEEN IN PLACE A MINIMUM OF 18 HOURS

STATE OF TENNESSEE
DEPARTMENT OF TRANSPORTATION

BRIDGE TABULATION AND ESTIMATED QUANTITIES

8/4/2015 6:33:43 AM
C:\Users\u02063\Documents\Davidson I65to Trinity Lane.dgn

TENNESSEE D.O.T.
DESIGN DIVISION
FILE NO.

PIN 106940.01

| TYPE | YEAR | PROJECT NO. | SHEET NO. |
|---|---|---|---|
| RESURF | 2015 | NH-I-65-3(124) | B2 |
| | | 19010-8165-44 | |
| BR REPAIR | | 19010-4165-04 | |
| | | | |

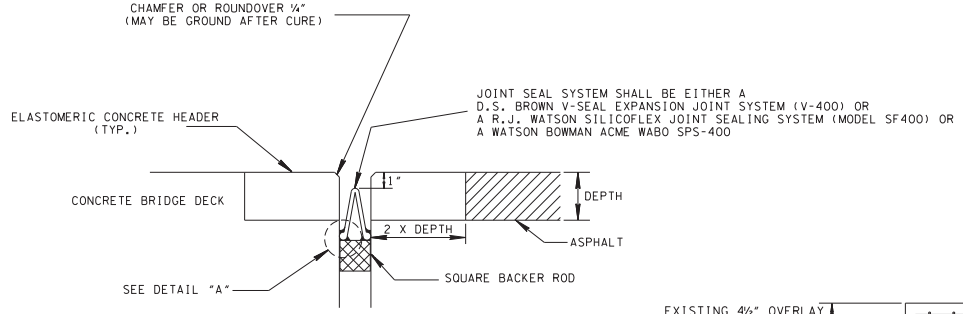


## JOINT SEAL DETAIL

THE JOINT SEAL SYSTEM SHALL BE EITHER A D.S. BROWN V-SEAL EXPANSION JOINT SYSTEM (V-400) OR A R.J. WATSON SILICOFLEX JOINT SEALING SYSTEM (MODEL SF400) OR A WATSON BOWMAN ACME (WABO SPS-400). FOR THE JOINT HEADER MATERIAL REFER TO THE (TDOT QUALIFIED PRODUCTS LIST NO. 9 SECTION A).THE JOINT SEAL SYSTEM SHALL BE INSTALLED UNDER DIRECT SUPERVISION OF AN AUTHORIZED TECHNICIAN PROVIDED BY THE JOINT SEAL SUPPLIER. FOR EACH JOINT AT EACH BRIDGE AND FOR EACH BRIDGE LOCATION WITHIN THE PROJECT, THE TECHNICIAN MUST APPROVE ALL ASPECTS OF THE GEOMETRY AND PREPARATION, INCLUDING GRINDING AND/OR GROOVING, PRIOR TO ANY JOINT MATERIAL INSTALLATION.

THIS INCLUDES THE REMOVAL OF THE EXISTING EXPANSION JOINT SYSTEM AND THE INSTALLATION OF THE NEW EXPANSION JOINT SYSTEM. THE NEW SYSTEM CONSISTS OF TWO ELASTOMERIC CONCRETE HEADERS, BACKER ROD, AND JOINT SEAL. DETAILED MANUFACTURER'S SPECIFICATIONS AND INSTALLATION PROCEDURES SHALL BE SUBMITTED TO THE PROJECT ENGINEER PRIOR TO CONSTRUCTION OF THE JOINT. THE MANUFACTURER AND THE CONTRACTOR SHALL BE REPONSIBLE FOR THE WORKMANSHIP AND PERFORMANCE OF THE INSTALLED JOINT

AFTER PAVING AND SEALING OVER THE EXISTING EXPANSION JOINT, THE ASPHALT SHALL BE CUT OUT AS SHOWN IN THE NEW EXPANSION JOINT DETAIL. FOLLOWING THE REMOVAL OF THE ASPHALT AND EXISTING JOINT MATERIAL,ALL AREAS SHALL BE THOROUGHLY CLEANED OF FOREIGN MATERIAL FOR THE FULL DEPTH OF THE EXISTING JOINT OPENING. ABRASIVE BLAST CLEANING MUST BE PERFORMED ON ALL SURFACES RECEIVING ANY NEW MATERIAL FOR THE NEW EXPANSION JOINT SYSTEM.

THE COST FOR REMOVING THE OLD JOINT SYSTEM AND INSTALLING THE NEW JOINT SEAL SYSTEM, LABOR, AND ANY MISCELLANEOUS MATERIALS NECESSARY TO INSTALL THE NEW EXPANSION JOINT TO BE INCLUDED UNDER ITEM NO. 604-10.44 EXPANSION JOINT REPAIRS, L.F.

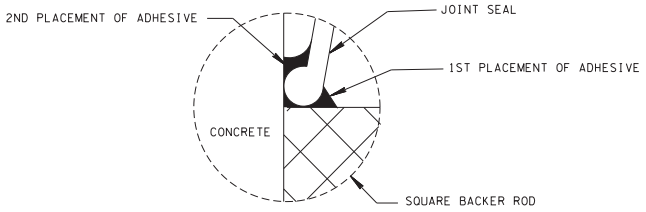


## DETAIL A

JOINT SEAL ADHESIVE TO BE RUN ALONG THE CORNER CREATED BY THE BACKER ROD AND THE VERTICAL FACE PRIOR TO PLACEMENT OF JOINT SEAL AND SECOND APPLICATION OF ADHESIVE.

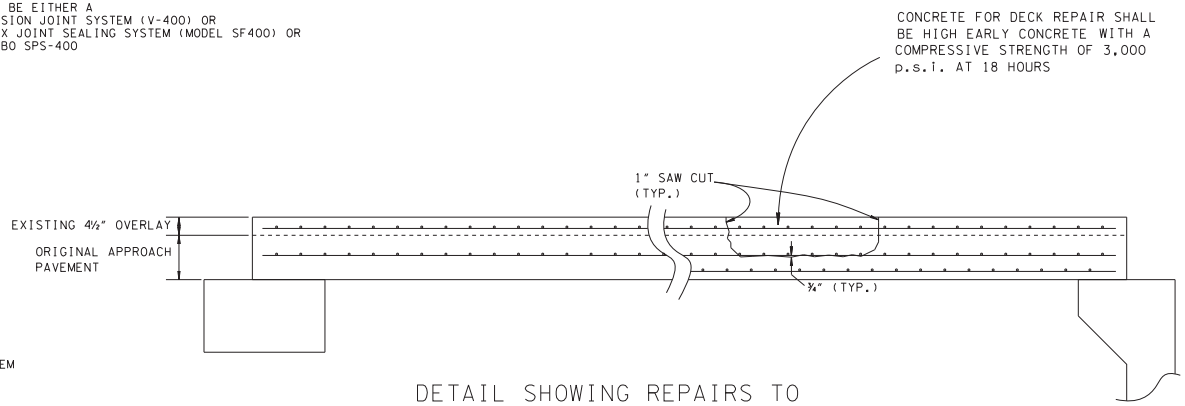


## DETAIL SHOWING REPAIRS TO PAVEMENT AT BRIDGE ENDS

NOTE: PARTIAL DEPTH REPAIR ONLY
REMOVE CONCRETE IN ALL DELAMINATED AREAS TO A MINIMUM DEPTH OF ¾" BELOW THE TOP BAR OF THE TOP MAT OF REINFORCING STEEL IN THE ORIGINAL SLAB OR TO SOUND CONCRETE. ALL REINFORCING STEEL IN AREAS OF CONCRETE REPAIR SHALL BE COMPLETELY CLEANED. CLEANING SHALL BE DONE PRIOR TO PLACING NEW CONCRETE. AREAS OF CONCRETE REMOVAL SHALL BE DESIGNATED BY PERSONNEL FROM THE HEADQUARTRES,BRIDGE INSPECTION AND REPAIR OFFICE. INSPECTIONS TO DETERMINE AREAS OF DECK REPAIR SHALL BE SCHEDULED WITH THE BRIDGE REPAIR OFFICE AT LEAST THREE (3) DAYS IN ADVANCE.

THE COST OF CONCRETE, CONCRETE REMOVAL, LABOR, CLEANING REBARS AND ANY MISCELLANEOUS MATERIAL REQUIRED SHALL BE PAID FOR UNDER ITEM NO. 604-10.53 CONCRETE REPAIR (PARTIAL DEPTH OF APPROACH PAVEMENT), S.Y.

SEE BRIDGE DECK REPAIR MATERIAL NOTE ON SHEET B1 FOR THE CONCRETE

STATE OF TENNESSEE
DEPARTMENT OF TRANSPORTATION

EXPANSION JOINT AND PAVEMENT AT BRIDGE END REPAIR DETAILS

8/3/2015 11:30:29 AM
J:\Users\JA02063\Documents\Davidson I65 to Trinity Lane.dgn

TENNESSEE D.O.T.
DESIGN DIVISION
FILE NO.

# THIN EPOXY OVERLAY NOTES

PIN 106940.01

| TYPE | YEAR | PROJECT NO. | SHEET NO. |
|---|---|---|---|
| RESURF | 2015 | NH-I-65-3(124) | B3 |
| | | 19010-8165-44 | |
| BR REPAIR | | 19010-4165-04 | |
| | | | |

TYPE 1 THIN EPOXY OVERLAY SYSTEM - USE DECK PRETREATMENT/PRIMER PER MANUFACTURER'S RECOMMENDATION, AND 2 LIFTS OF AN EPOXY-URETHANE COPOLYMER AND AGGREGATE. TYPE 1 OVERLAY SHALL BE APPLIED MECHANICALLY USING METERED EQUIPMENT; HAND MIXING OF MATERIAL IS NOT PERMITTED.

THIN OVERLAY SYSTEM SHALL BE FROM THE QUALIFIED PRODUCTS OPL.23.005, TYPE 1 THIN OVERLAY (EPXOY URETHANE). MINIMUM OVERLAY THICKNESS SHALL BE 3/8 INCH.

APPLICATION EQUIPMENT SHOULD :

A) BE CAPABLE OF METERING, MIXING AND DISTRIBUTING THE POLYMER AND PRETREATMENT TO MANUFACTURER'S RECOMMENDATION.

B) USE AN APPLICATION MACHINE THAT FEATURES POSITIVE DISPLACEMENT VOLUMETRIC METERING PUMPS CONTROLLED BY A HYDRAULIC POWER UNIT.

C) STORE COMPONENTS IN TEMPERATURE CONTROLLED RESERVOIRS CAPABLE OF MAINTAINING 100 DEGREES FAHRENHEIT (PLUS OR MINUS 10 DEGREES) TO INSURE OPTIMAL MIXING.

D) CHECK MIXING RATIO AT THE PUMP OUTLETS AS WELL AS CYCLE COUNTING CAPABILITIES TO MONITOR OUTPUT ON STANDARD FEATURES.

E) USE MOTIONLESS IN-LINE MIXING SO AS TO NOT OVERLY SHEAR THE MATERIAL TO ENTRAP AIR IN THE MIX.

F) MAXIMIZE MATERIAL WORKING TIME BY MIXING IT IMMEDIATELY BEFORE DISPENSING.

AGGREGATE SHALL BE ANGULAR, HAVING LESS THAN 0.2% MOISTURE AND FREE OF DIRT, CLAY, ASPHALT AND OTHER FOREIGN OR ORGANIC MATERIALS. AGGREGATE FOR ALL LAYERS SHALL BE BAUXITE OR FLINT ROCK PRODUCTS FLINT AND MEETS THE FOLLOWING GRADATION:

| SIEVE SIZE | % PASSING |
|---|---|
| NO. 6 | 95-100 |
| NO. 10 | 10-35 |
| NO. 20 | 0-3 |

FULL AND PARTIAL DEPTH DECK REPAIR SHALL CURE A MINIMUM OF 28 DAYS BEFORE THE OVERLAY IS PLACED. TRAFFIC SHALL BE ALLOWED TO USE THE BRIDGE DURING THE CURING PERIOD OF THE PATCHES BUT NOT AFTER SHOTBLASTING. MAGNESIUM PHOSPHATE BASED MATERIALS WILL NOT BE ALLOWED.

THE CONCRETE DECK SURFACE SHALL BE CLEANED BY SHOTBLASTING TO REMOVE ANY OIL, DIRT, RUBBER, TRAFFIC STRIPING, OR ANY OTHER POTENTIAL DETRIMENTAL MATERIAL SUCH AS CURING COMPOUND AND LAITANCES, WHICH THE MANUFACTURER AND ENGINEER'S OPINION WOULD PREVENT PROPER BONDING AND CURING OF THE MATERIAL. IN AREAS WHERE SHOTBLASTING EQUIPMENT CAN NOT REACH (I.E., ALONG CURBS AND BRIDGE RAILS) SANDBLASTING IS PERMITTED TO AN EXTENT TO THE ENGINEER'S AND MANUFACTURER'S APPROVAL. IMMEDIATELY BEFORE APPLICATION, ALL PREPARED SURFACES SHALL BE CLEANED WITH COMPRESSED AIR OR VACUUMED TO REMOVE DUST AND DEBRIS.
ALL SURFACES THAT ARE TREATED SHALL BE DRY AT THE TIME OF APPLICATION. THE OVERLAY SHALL NOT BE APPLIED WHEN IT HAS RAINED 24 HOURS PRIOR TO, OR RAIN IS FORECAST WITHIN 8 HOURS AFTER, APPLICATION. THE MOISTURE CONTENT IN THE DECK SUBSTRATE SHALL BE TESTED. MOISTURE IS NOT TO EXCEED 4.5 PERCENT WHEN MEASURED BY ELECTRONIC METER. IF THE TEST SHOWS EXCESS MOISTURE, THE DECK SHALL CONTINUE TO DRY BEFORE APPLICATION PROCEEDS.

BLUSHING (A WAXY SURFACE COATING ON THE EPOXY) IS CAUSED BY THE REACTION OF MOISTURE WITH THE HARDENING AGENT. BLUSHING CREATES A SURFACE THAT MAKES FUTURE LAYERS DIFFICULT TO ADHERE. LIFTS THAT SHOW SIGNS OF BLUSHING SHALL BE REMOVED AND REPLACED PRIOR TO APPLICATION OF THE NEXT. THE COST TO REMOVE AND REPLACE THESE AREAS SHALL BE AT THE CONTRACTOR'S EXPENSE.

TRAFFIC, OTHER THAN APPLICATION EQUIPMENT, SHALL NOT BE ALLOWED ON ANY PORTION OF THE DECK THAT HAS BEEN SHOTBLASTED OR WHERE PART OF THE APPLICATION HAS BEEN PLACED.

SEE MANUFACTURER'S RECOMMENDATIONS FOR REQUIRED AMBIENT AND SURFACE TEMPERATURES AND HUMIDITY LIMITS FOR APPLICATION.

THE MANUFACTURER SHALL HAVE A REPRESENTATIVE ON THE JOB SITE AT ALL TIMES DURING APPLICATION AND CURE TIME. THE REPRESENTATIVE, ALONG WITH CONSULTATION WITH ENGINEER, MAY SUSPEND ANY ITEM OF WORK THAT IS SUSPECT AND DOES NOT MEET THE REQUIREMENTS OF THE SPECIFICATIONS. WORK SHALL NOT RESUME UNTIL THE ENGINEER AND REPRESENTATIVE ARE SATISFIED THAT APPROPRIATE REMEDIAL ACTION HAS BEEN TAKEN BY THE CONTRACTOR.

ALL COSTS FOR AGGREGATE, EPOXY FOR MINIMUM OF TWO LIFTS, SURFACE PREPARATION, LABOR AND ANY OTHER MISCELLANEOUS MATERIALS REQUIRED TO PLACE THIN OVERLAY SHALL BE INCLUDED IN ITEM NO. 617-04.01, TYPE 1 THIN EPOXY OVERLAY (EPOXY URETHANE), SY, AS CALLED FOR ON THE QUANTITY SHEET.

THICKNESS VERIFICATION: THE PROJECT ENGINEER SHALL BE NOTIFIED OF THE NUMBER OF GALLONS USED ON THE PROJECT WITH NOTARIZED QUANTITY STATEMENTS FROM THE CONTRACTOR AND THE MANUFACTURER. THE CONTRACTOR SHALL VERIFY TO TDOT THAT THE OVERLAY IS AN AVERAGE OF AT LEAST 3/8 INCH THICK AT THREE RANDOM LOCATIONS AGREED UPON BY THE PROJECT ENGINEER AND THE MATERIAL MANUFACTURER REPRESENTATIVE. IF 3/8 INCH AVERAGE IN NOT ACHIEVED, A RETEST SHAL BE PERFORMED IN ADJOINING AREAS. THIN AREAS SHALL BE RE-COATED AS DESCRIBED ABOVE BY THE CONTRACTOR AND RE-VERIFIED AT NO ADDITIONAL COST TO TDOT. THIS VERIFICATION MAY CONSIST OF CORES, HOLES, ETC., BUT IN ALL CASES, ANY DESTRUCTIVELY TESTED AREAS SHALL BE REPAIRED BY THE CONTRACTOR BEFORE FINAL ACCEPTANCE BY THE PROJECT ENGINEER.

ON PHASED EPOXY OVERLAY APPLICATIONS THICKNESS TEST SHALL BE PERFORMED ON THE COMPLETED OVERLAY PHASE PRIOR TO SWITCHING TRAFFIC ONTO IT AND BEGINNING THE NEXT PHASE.

08/04/15

STATE OF TENNESSEE
DEPARTMENT OF TRANSPORTATION

THIN EPOXY OVERLAY NOTES

8/3/2015 8:32:01 AM
C:\Users\u02063\Documents\Davidson I65 to Trinity Lane.dgn