TENNESSEE D.O.T.
DESIGN DIVISION
FILE NO.

TYPE	YEAR	PROJECT NO.	SHEET NO.
RESURF		30100-8109-44	B2
		NH-I-81-1(127)	
BRIDGE REPAIR		30100-4109-04	

PIN# 084292.01

DETAILS FOR ADDING CONCRETE RISER TO THE EXISTING BRIDGE ARE TYPICAL FOR BOTH VERTICAL AND SLOPED FACED BRIDGE WITH STRUCTURAL TUBING REFER TO DWG. NUMBERS K-38-154 AND K-38-154A. (SLOPED FACED BRIDGE IS SHOWN).

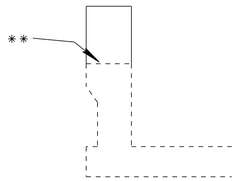

VIEW OF PARAPET REPAIR

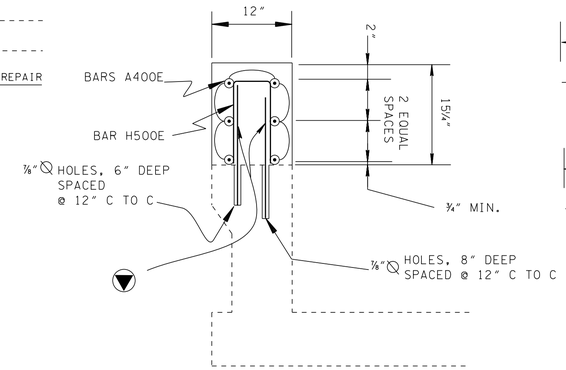

DETAIL X-X

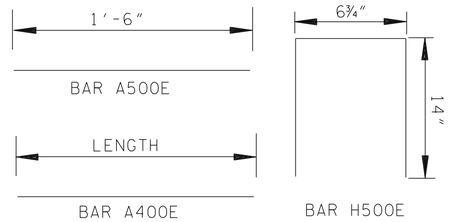

BAR BEND DIMENSIONS

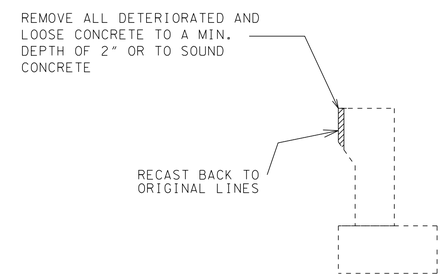

SECTION "AA"

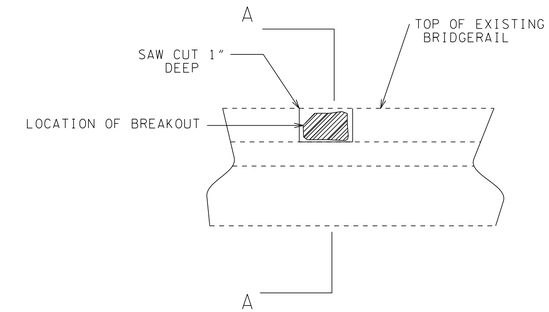

DENOTES AREAS OF EXISTING SPALLED CONCRETE

▼ BARS A500E, 18" LONG ARE TO BE GROUTED INTO THE TOP OF THE EXISTING BRIDGERAIL. HOLES FOR BARS A500E ARE TO BE ⅞" AND PACKED WITH EPOXY GROUT AND BARS ARE TO BE DRIVEN UNTIL IT SEATS. GROUTING MATERIAL IS TO BE APPROVED BY TENNESSEE DEPARTMENT OF TRANSPORTATION, MATERIALS AND TEST DIVISION.

** THE TOP SURFACE OF THE CONCRETE SHALL BE ROUGHENED TO A FULL AMPLITUDE OF APPROXIMATELY ¼". THE CONCRETE SURFACE SHALL BE CLEAN AND FREE OF LAITANCE BEFORE NEW CONCRETE IS PLACED AGAINST IT. A 5000 PSI WATER WASH SHALL BE USED TO CLEAN THE CONCRETE SURFACE.

NOTE: THE COST OF SAW CUTTING, REMOVING SPALLED OR CRACKED CONCRETE, CLEANING EXPOSED REINFORCING STEEL, PATCHING MATERIAL, LABOR AND ANY MISCELLANEOUS MATERIALS NECESSARY TO COMPLETE THE REPAIRS AS SHOWN SHALL BE INCLUDED IN ITEM NO. 604-10.22

NOTE: AREAS OF SPALLED CONCRETE SHALL BE DESIGNATED BY PERSONNEL FROM THE HEADQUARTERS AND THESE AREAS SHALL BE REPAIRED AND REPOURED WITH NEW CONCRETE BRIDGERAIL RAISER.

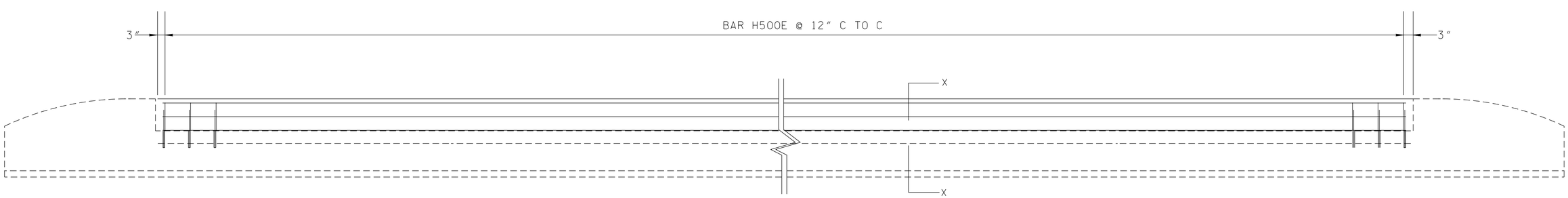

ELEVATION VIEW

NOTE: COST OF HIGH EARLY STRENGTH CONCRETE, REINFORCING STEEL, LABOR, FORMING AND MISCELLANEOUS ITEMS NECESSARY FOR THE BRIDGERAIL MODIFICATIONS SHALL BE INCLUDED IN ITEM NO. 604-10.22, CONCRETE PARAPET REPAIR (L.F.)

HIGH EARLY STRENGTH CONCRETE SHALL BE USED WITH A COMPRESSIVE STRENGTH OF 3,000 p.s.i. AT 18 HOURS. THE CONTRACTOR SHALL PROVIDE PROOF PRIOR TO BEGINNING WORK THAT PROPOSED CONCRETE MIX WILL OBTAIN REQUIRED PROPERTIES. PROOF SHALL BE PROVIDED BY AN INDEPENDENT TESTING COMPANY AND SUBMITTED TO THE MATERIAL AND TEST DIVISION OF TENNESSEE DEPARTMENT OF TRANSPORTATION FOR APPROVAL. TRAFFIC SHALL NOT BE ALLOWED ALONG REPAIRED AREAS UNTIL THE CONCRETE HAS BEEN IN PLACE A MINIMUM OF 18 HOURS.

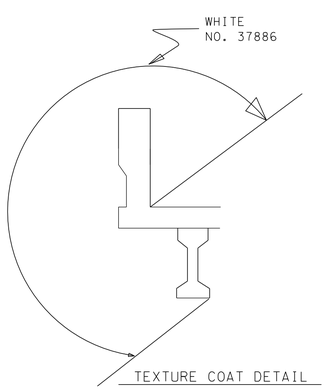

TEXTURE COAT DETAIL

NOTE: THE EXISTING SURFACES THAT ARE TO RECEIVE A TEXTURE FINISH SHALL BE FREE OF ALL EFFLORESCENCE FLAKING, COATING, RUST, DIRT, OIL, MOLD AND OTHER FOREIGN SUBSTANCES. COST TO BE INCLUDED IN ITEM NO. 604-04.02.

NOTE: COST OF TEXTURE COATING SHALL BE INCLUDED IN ITEM NO. 604-04.02 AND INCLUDES ENDPOSTS.

NOTE: THE CONTRACTOR SHALL USE CONTAINMENT SCREENS OR OTHER MEASURES AS NECESSARY TO PREVENT ANY TEXTURE COATING FROM ENTERING THE ENVIRONMENT. CONTAINMENT MEASURES SHALL BE APPROVED BY THE ENGINEER AND COST SHALL BE INCLUDED IN ITEMS BID ON.

** BARS A400E @ 2 EQUAL SPACES = 6" WITH MINIMUM SPLICE LENGTH OF 12"

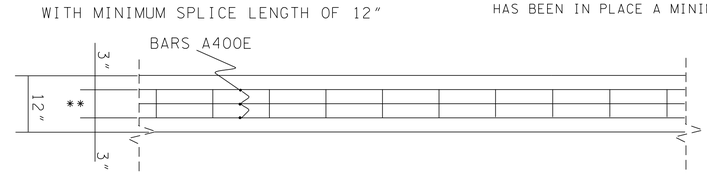

PLAN VIEW

STATE OF TENNESSEE
DEPARTMENT OF TRANSPORTATION

CONCRETE PARAPET REPAIR DETAIL

7/8/2015 10:50:38 AM
P:\STRUCT_RPT\Bridgerepair\Sliesh\Tabulated Sheets\Rg.INTERSTATE\6 Oct.2015 Letting\Greene Co\Greene County 100810.00 to 6.00 Tabsheet.dgn