TENNESSEE D.O.T.
DESIGN DIVISION
FILE NO.

| TYPE | YEAR | PROJECT NO. | SHEET NO. |
|---|---|---|---|
| R.O.W. | 2013 | HRRR/HSIP-2480(10) | 2 |
| CONST. | 2014 | HRRR/HSIP-2480(10) | 2A |
| | | | |
| | | | |

NEW ERA RD.
78946-2414-94
78946-3409-94

SEVIER CO.
(R.O.W.)
(CONST.)

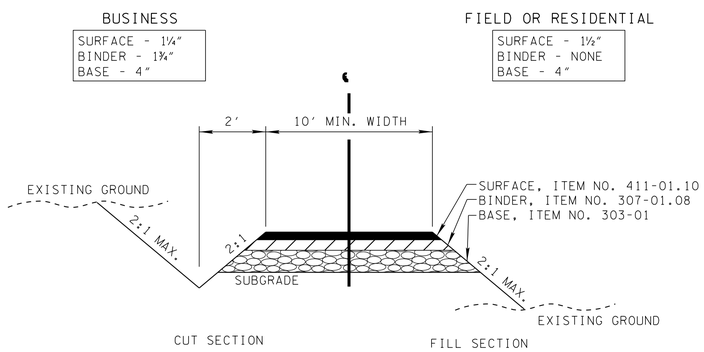


## TYPICAL SECTION

PRIVATE DRIVE TO BUSINESS,
FIELD, OR RESIDENTIAL PROPERTY

NOTE: DITCH TO BE CONSTRUCTED AS
DIRECTED BY THE TDOT SUPERVISOR

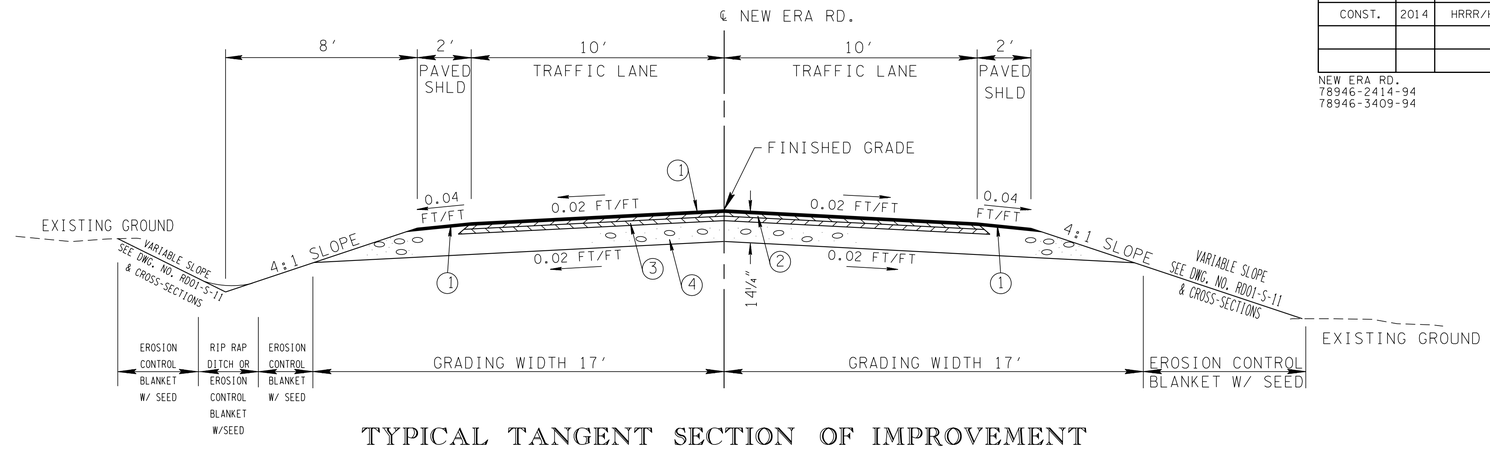


## TYPICAL TANGENT SECTION OF IMPROVEMENT

(BASED ON STD. DWG. RD01-TS-2)

STA. 11+52.00 TO STA. 12+27.79

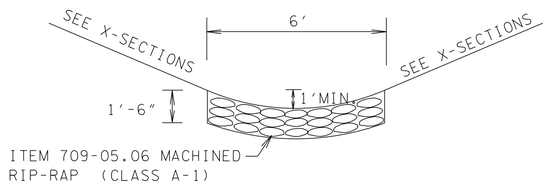


## DETAIL OF RIP-RAP DITCH

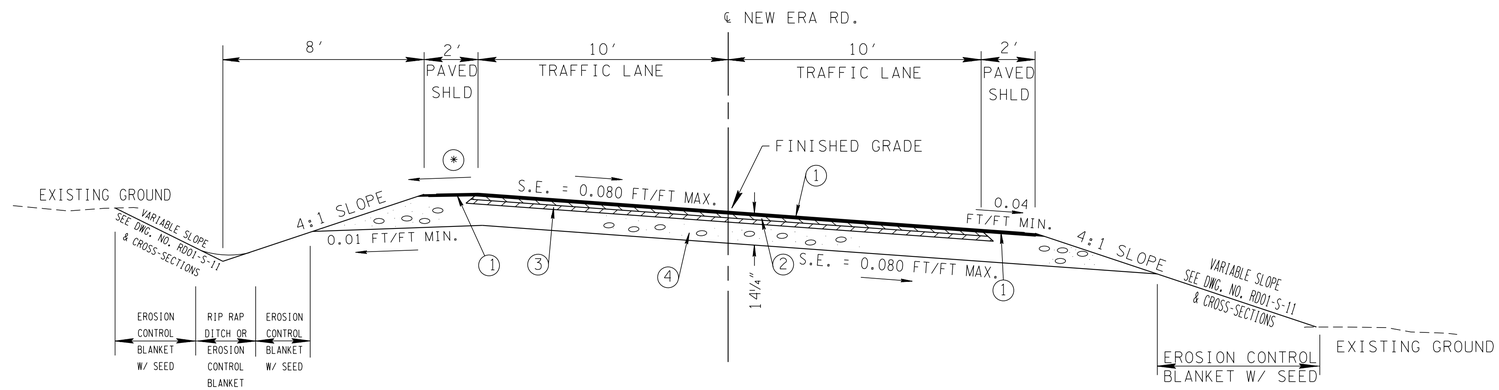


## TYPICAL SUPERELEVATED SECTION OF IMPROVEMENT

(BASED ON STD. DWG. RD01-TS-2)

STA. 10+89.00 TO STA. 11+52.00
STA. 12+27.79 TO STA. 15+00.00

(*) ROLL-OVER "ALGEBRAIC DIFFERENCE" IN RATE OF CROSS SLOPE NOT TO EXCEED 0.07 FT/FT.

### PROPOSED PAVEMENT SCHEDULE

| | |
|---|---|
| (1) ASPHALTIC CONCRETE SURFACE (HOT MIX) @ 1¼"+ THICK (APPROX. 132.5 LBS / SQ.YD.)<br>411-01.10 ACS MIX (PG 64-22) GRADING "D"<br>402-01 BITUMINOUS MATERIAL FOR PRIME COAT (PC) (RATE 0.35 GAL / SQ.YD.)<br>403-01 BITUMINOUS MATERIAL FOR TACK COAT (TC) (RATE 0.07 GAL / SQ.YD.) | (3) BITUMINOUS PLANT MIX (HOT MIX) @ 3"+ THICK (APPROX. 345 LBS / SQ.YD.)<br>307-01.01 ASPHALT CONCRETE MIX (PG 64-22) (BPMB-HM) GRADING "A"<br>402-01 BITUMINOUS MATERIAL FOR PRIME COAT (PC) (RATE 0.35 GAL / SQ.YD.) |
| (2) BITUMINOUS PLANT MIX BASE (HOT MIX) @ 2"+ THICK (APPROX. 226 LBS / SQ.YD.)<br>307-01.08 ASPHALT CONCRETE MIX (PG 64-22) (BPMB-HM) GRADING "B-M2"<br>403-01 BITUMINOUS MATERIAL FOR TACK COAT (TC) (RATE 0.07 GAL / SQ.YD.) | (4) MINERAL AGGREGATE BASE - 8"+ THICK (ROADWAY) & FULL DEPTH (SHOULDERS)<br>303-01 MINERAL AGGREGATE, TYPE "A" BASE GRADING "D" |

SEALED BY

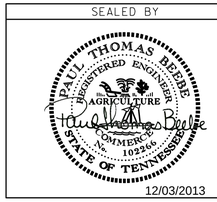


12/03/2013

STATE OF TENNESSEE
DEPARTMENT OF TRANSPORTATION

# TYPICAL SECTIONS AND PAVEMENT SCHEDULE

03-DEC-2013 09:34
\\JOWF01.tdot.state.tn.us\OIShared\SURVDES\DESIGN\PROJECTS\SE-NEWERA-OI\CONST 002A.sht