TYPE	YEAR	PROJECT NO.	SHEET NO.
R.O.W.	2013	30952-2514-04	2
CONST.	2013	30952-3514-04	2A

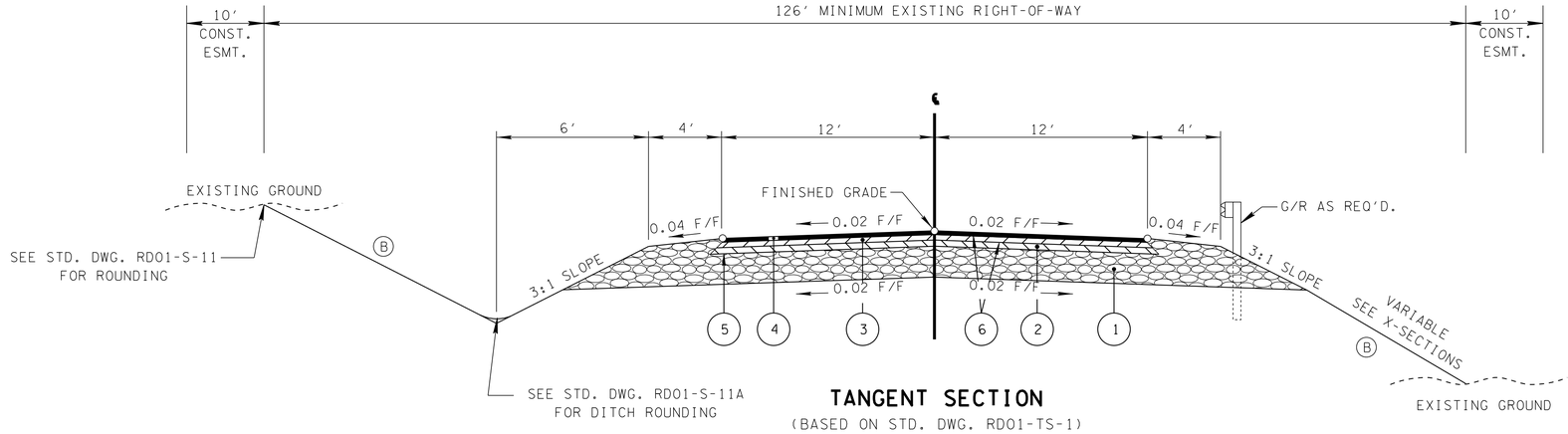

TANGENT SECTION

(BASED ON STD. DWG. RD01-TS-1)

BALL ROAD

STA. 40+37.14 TO STA. 42+34.76

(A) THE SLOPES OF THE SHOULDER AND ROADWAY PAVEMENT SHALL NOT EXCEED AN ALGEBRAIC DIFFERENCE OF 0.07.

(B) SEE STD. DWG. RD01-S-11 (CASE II) FOR DETAILS NOT SHOWN

SEE SHEET 2A FOR PROPOSED PAVEMENT SCHEDULE

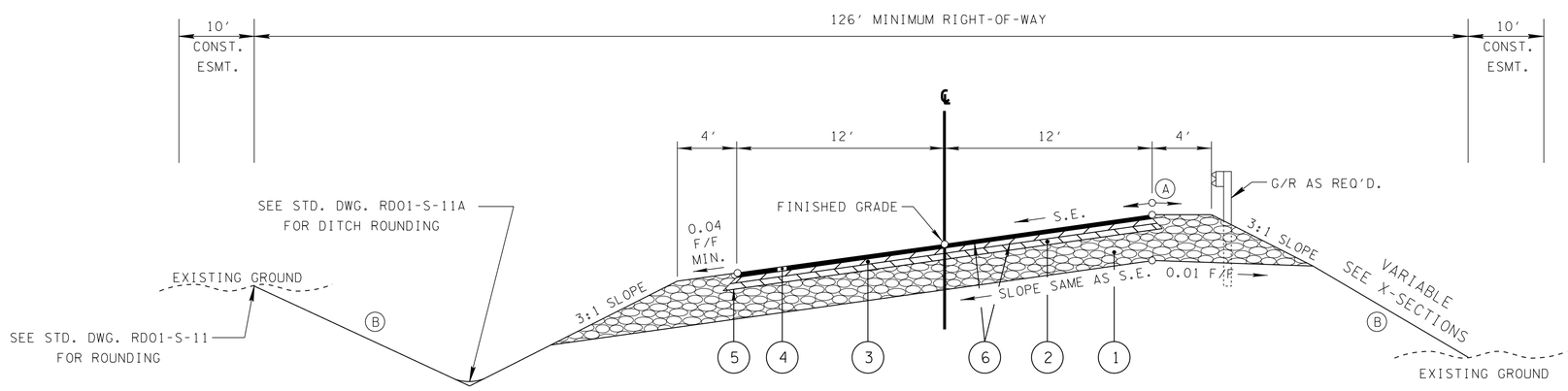

SUPERELEVATED SECTION

(BASED ON STD. DWG. RD01-TS-1)

BALL ROAD

STA. 35+00.00 TO STA. 40+37.14

SEALED BY

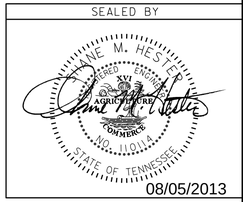

STATE OF TENNESSEE
DEPARTMENT OF TRANSPORTATION

TYPICAL SECTIONS

05-AUG-2013 10:47
C:\projects\GREENE_CO_SIA\002A.SHT