TYPE	YEAR	PROJECT NO.	SHEET NO.
R.O.W.	2013	30952-2514-04	2A
CONST.	2013	30952-3514-04	2B

FIELD OR RESIDENTIAL

SURFACE - 1½"
BINDER - NONE
BASE - 4"

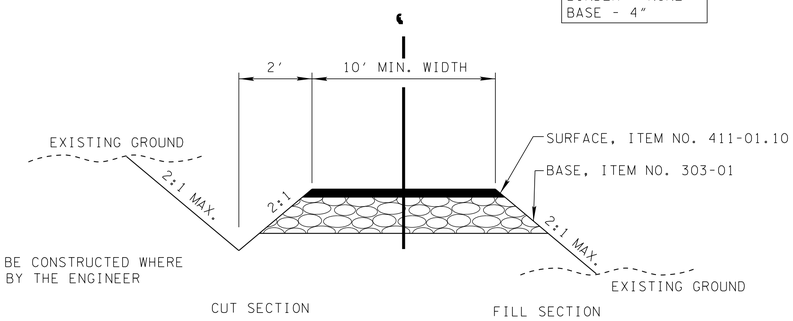

NOTE: DITCH TO BE CONSTRUCTED WHERE DIRECTED BY THE ENGINEER

TYPICAL SECTION

PRIVATE DRIVE TO BUSINESS,
FIELD, OR RESIDENTIAL PROPERTY

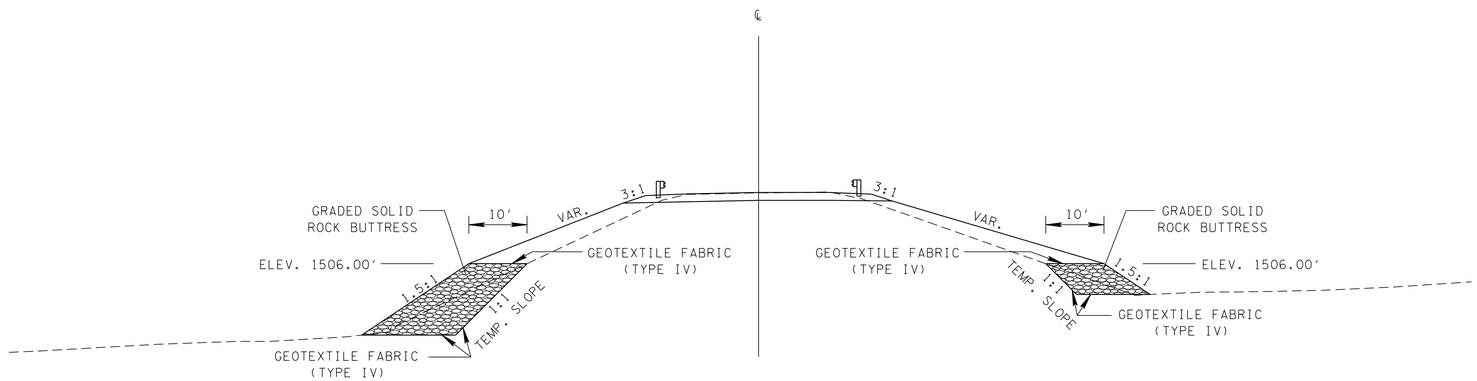

DETAIL OF SOLID ROCK BUTTRESS

STA. 36+00 TO STA. 42+00 LT.
STA. 39+00 TO STA. 42+00 RT.

PROPOSED PAVEMENT SCHEDULE

(1) MINERAL AGGREGATE BASE (10"± DEPTH) 303-01 MINERAL AGGREGATE, TYPE A BASE, GRADING D FULL DEPTH UNDER SHOULDERS	(4) BITUMINOUS SURFACE BITUMINOUS SURFACE @ 1.25"± THICK (APPROX. 132.5 LB/SY) 411-01.10 ASPHALT CEMENT (PG64-22) (ACS) GRADING D
(2) BITUMINOUS BASE BITUMINOUS BASE @ 3.00"± THICK (APPROX. 345 LB/SY) 307-01.01 ASPHALT CONCRETE MIX (PG64-22) (BPMB-HM) GRADING A	(5) PRIME COAT 402-01 BITUMINOUS MATERIAL FOR PRIME COAT (PC) (0.30-0.35 GAL/SY) 402-02 AGGREGATE FOR COVER MATERIAL (PC) (8-12 LB/SY)
(3) BITUMINOUS BINDER BITUMINOUS BINDER @ 2.00"± THICK (APPROX. 226.00 LB/SY) 307-01.08 ASPHALT CONCRETE MIX (PG64-22) (BPMB-HM) GRADING B-M2	(6) TACK COAT 403-01 BITUMINOUS MATERIAL FOR TACK COAT (TC) (0.07 GAL/SY)

SEALED BY

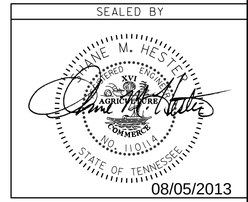

08/05/2013

STATE OF TENNESSEE
DEPARTMENT OF TRANSPORTATION

TYPICAL SECTIONS AND PAVEMENT SCHEDULE

02-AUG-2013 11:22
C:\projects\GREENE_CO_SIA\002B.SHT