TENNESSEE D.O.T.
DESIGN DIVISION
FILE NO.

| TYPE | YEAR | PROJECT NO. | SHEET NO. |
|---|---|---|---|
| RESURF | 2013 | 19012-8160-44 | B1 |
| REPAIR | | 19012-4160-04 | |
| | | | |
| | | | |

## TABULATION OF BRIDGE RELATED WORK AND ESTIMATED QUANTITIES

| LOCATION OF BRIDGE AND BRIDGE NUMBER | REFERENCE DRAWINGS TO BE PRINTED WITH CONTRACT DRAWINGS | TYPE OF WORK | 604-10.50 BRIDGE DECK REPAIR (PARTIAL DEPTH OF SLAB) SY | 617-01 BRIDGE DECK SEALANT SY | |
|---|---|---|---|---|---|
| 19-I65-21.43 NBL/ SR174 | | BRIDGE DECK REPAIR BRIDGE DECK SEALANT | 140 | 939 | |
| 19-I65-21.43 SBL/ SR174 | | BRIDGE DECK REPAIR BRIDGE DECK SEALANT | 140 | 939 | |
| 19-I65-21.58 NBL/ E. CEDAR ST. (A369) | | BRIDGE DECK REPAIR BRIDGE DECK SEALANT | 150 | 1046 | |
| 19-I65-21.58 SBL/ E. CEDAR ST. (A369) | | BRIDGE DECK REPAIR BRIDGE DECK SEALANT | 150 | 1046 | |
| 19-I65-22.15 NBL/ MANSKER CREEK | | BRIDGE DECK REPAIR BRIDGE DECK SEALANT | 370 | 1258 | |
| 19-I65-22.15 SBL/ MANSKER CREEK | | BRIDGE DECK REPAIR BRIDGE DECK SEALANT | 370 | 1258 | |
| | | | | | |
| | | TOTAL | 1320 | 6486 | |

## BRIDGE DECK REPAIR MATERIAL

IF OVERNIGHT LANE CLOSURES ARE PROVIDED FOR THIS PROJECT AND THE LANE CLOSURES ARE SUCH THAT TRAFFIC WILL BE KEPT OFF THE BRIDGE DECK WHERE DECK REPAIRS WILL BE MADE. THEN HIGH EARLY STRENGTH CONCRETE SHALL BE USED WITH A COMPRESSIVE STRENGTH OF 3,000 p.s.i. AT 18 HOURS. THE CONTRACTOR SHALL PROVIDE PROOF PRIOR TO BEGINNING WORK THAT PROPOSED CONCRETE MIX WILL OBTAIN REQUIRED PROPERTIES. PROOF SHALL BE PROVIDED BY AN INDEPENDENT TESTING COMPANY AND SUBMITTED TO THE MATERIAL AND TEST DIVISION OF TENNESSEE DEPARTMENT OF TRANSPORTATION FOR APPROVAL. CONCRETE REPAIR AREAS SHOULD BE (WET) CURE A MINIMUM OF 12 HOURS. TRAFFIC SHALL NOT BE ALLOWED ON REPAIRED AREAS UNTIL THE CONCRETE HAS REACHED A MINIMUM COMPRESSION STRENGTH OF 3,000 p.s.i.

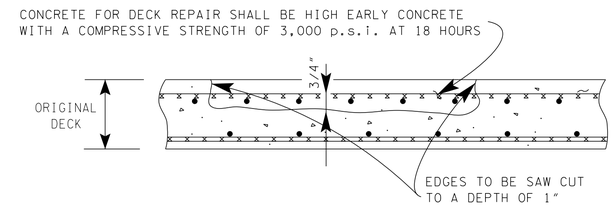


SKETCH SHOWING DECK REPAIR

NOTE: PARTIAL DEPTH REPAIR ONLY
REMOVE CONCRETE IN ALL DELAMINATED AREAS TO A DEPTH OF ¾" BELOW THE TOP BAR OF THE TOP MAT OF REINFORCING STEEL IN THE ORIGINAL DECK. ALL REINFORCING STEEL IN AREAS OF DECK REPAIR SHALL BE COMPLETELY CLEANED. CLEANING SHALL BE DONE PRIOR TO PLACING NEW CONCRETE OR INSTALLING PATCHING MATERIAL. AREAS OF CONCRETE REMOVAL SHALL BE DESIGNATED BY PERSONNEL FROM THE HEADQUARTRES, BRIDGE INSPECTION AND REPAIR OFFICE. INSPECTIONS TO DETERMINE AREAS OF DECK REPAIR SHALL BE SCHEDULED WITH THE BRIDGE REPAIR OFFICE AT LEAST THREE (3) DAYS IN ADVANCE.

THE COST OF CONCRETE, CONCRETE REMOVAL, LABOR, CLEANING REBARS AND ANY MISCELLANEOUS MATERIAL REQUIRED SHALL BE PAID FOR UNDER ITEM NO. 604-10.50 BRIDGE DECK REPAIR (PARTIAL DEPTH OF SLAB), S.Y.

NOTE: ITEM NO. 604-10.50, BRIDGE DECK REPAIR (PARTIAL DEPTH OFSLAB), SHALL BE BID WITH THE CONTINGENCY THAT THIS MAY BE INCREASED, DECREASED OR ELIMINATED AS DIRECTED BY THE ENGINEER.

NOTE: TRAFFIC CONTROL SHALL BE PROVIDED ON ROADWAY UNDERPASS DURING PARTIAL DEPTH DECK REPAIR OF OVERHEAD BRIDGE.

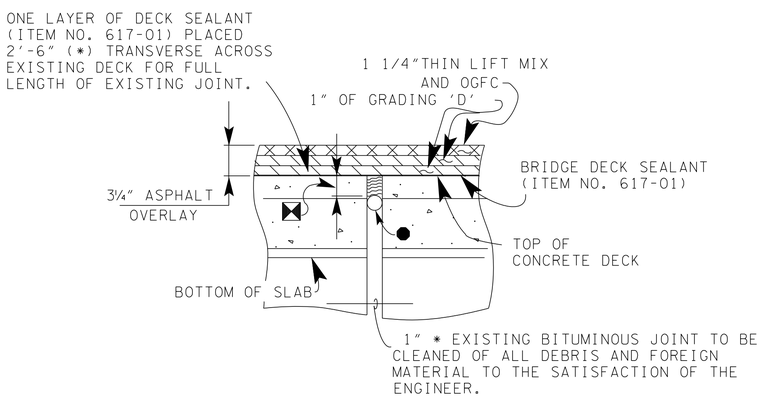


## SECTION THRU EXISTING BRIDGE SLAB JOINT

(TYPICAL AT ALL EXISTING BITUMINOUS JOINTS WHEN NO JOINT REPAIR DETAIL IS SPECIFIED IN THE TABLE ABOVE)

● NOTE: THE EXISTING JOINT OPENING SHALL BE CAULKED WITH A BACKER ROD OF SUITABLE DIAMETER. THE ROD SHALL BE PLACED AT A DEPTH TO ENSURE THE CORRECT WIDTH/DEPTH RATIO OF THE NEW JOINT SEALANT MATERIAL. BACKER ROD SHALL BE AS PER JOINT MANUFACTURERS RECOMMENDATION.

⊠ NOTE: THE EXISTING PREFORMED ELASTIC JOINT SEALER SHALL BE REMOVED AND THE CONCRETE SURFACES IN THE JOINT AREA SHALL BE BLAST CLEANED PRIOR TO THE INSTALLATION OF THE NEW JOINT SEALER. THE CONTRACTOR SHALL USE A COLD POUR SINGLE COMPONENT SILICONE JOINT SEALER AS APPROVED BY THE DIVISION OF MATERIALS AND TEST. COST OF JOINT CLEANING AND SEALING TO BE INCLUDED UNDER ITEM NO. 617-01 (BRIDGE DECK SEALANT). THE SEALER SHALL EXTEND UP AND ACROSS THE CURB OR SIDEWALK AREA TO THE OUTER EDGE OF THE BRIDGE SLAB.

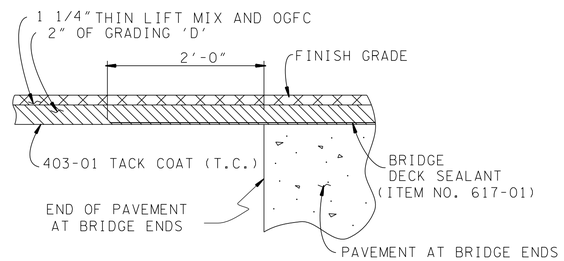


## BRIDGE DECK SEALANT DETAILS

NOTE: ON BRIDGE DECK WHERE THERE IS A BITUMINOUS JOINT OR WITH NO EXPANSION JOINT, MEMBRANE SHALL EXTEND 2'-0" OVER THE END OF THE BRIDGE DECK. IF THE DECK HAS A STEEL EXPANSION JOINT, THE MEMBRANE SHALL STOP AT THE STEEL EXPANSION JOINT.

NOTE: PRIOR TO THE PLACEMENT OF THE BRIDGE DECK SEAL MEMBRANE, THE BRIDGE SHALL BE CLEANED OF ALL LOOSE DEBRIS AND EXCESS DIRT. THE BRIDGE DECK SHALL ALSO BE CLEANED OF ALL OIL, DIESEL OR ANY OTHER PETROLEUM PRODUCT SPILLS AND DRY ACCORDING TO THE MANUFACTURE'S SPECIFICATIONS.

THE WATERPROOFING MEMBRANE SHALL BE APPLIED DIRECTLY TO THE BRIDGE DECK SURFACE ACCORDING TO THE MANUFACTURE'S SPECIFICATIONS. THE COST OF ALL THE MATERIALS NECESSARY FOR THE WATERPROOFING APPLICATION (WATERPROOFING MEMBRANE, PRIMER, MASTIC, ETC.) AND LABOR SHALL BE PAID FOR UNDER ITEM NO. 617-01 BRIDGE DECK SEALANT S.Y.

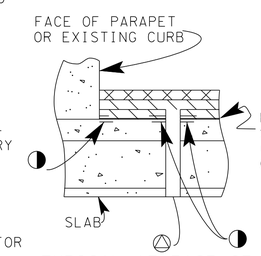


TYPICAL AT FACE OF EXISTING CURB OR NEW PARAPET

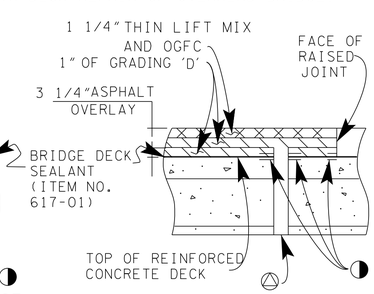


TYPICAL FOR NEW RAISED EXPANSION JOINTS

◑ MASTIC AS RECOMMENDED BY MANUFACTURER OF MEMBRANE. SEE STD. SPEC. ART. 906.04.

△ 1½" ø HOLE TO BE DRILLED BY THE CONTRACTOR NEAR FACE OF NEW PARAPETS OR EXISTING CURBS AT LOW POINTS.

BRIAN K. EGLI
REGISTERED ENGINEER
AGRICULTURE
COMMERCE
No. 107196
STATE OF TENNESSEE
07/16/13

STATE OF TENNESSEE
DEPARTMENT OF TRANSPORTATION

BRIDGE TABULATION AND ESTIMATED QUANTITIES

7/16/2013 10:15:02 AM
C:\Users\JJ02063\Documents\2013 Resurfacing Drawings.dgn