CONST. NO.		
PROJECT NO.	YEAR	SHEET NO.
19012-4159-04	2014	

REVISIONS

NO.	DATE	BY	BRIEF DESCRIPTION

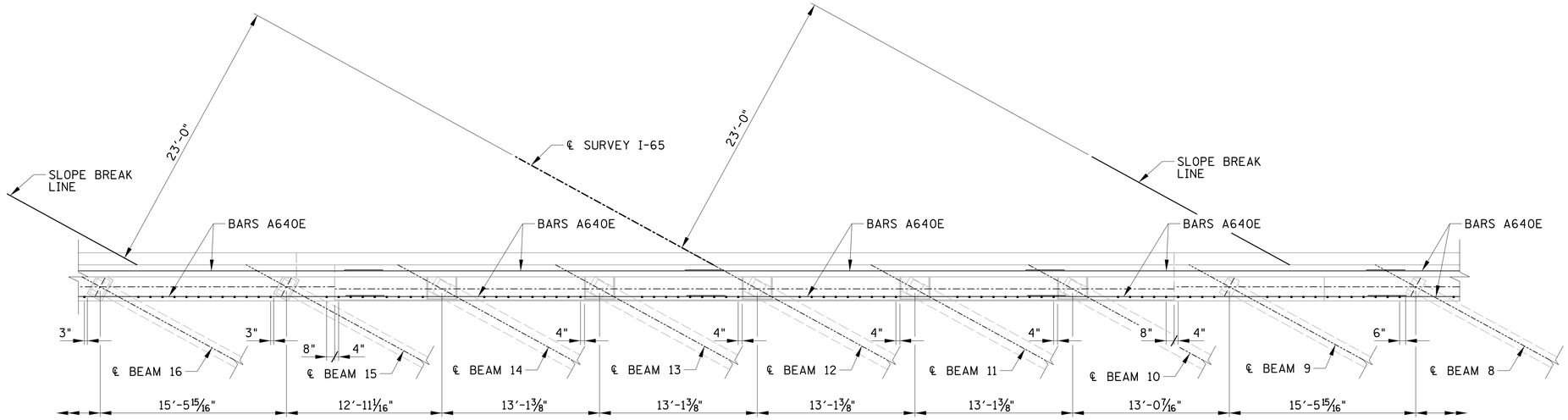

PLAN

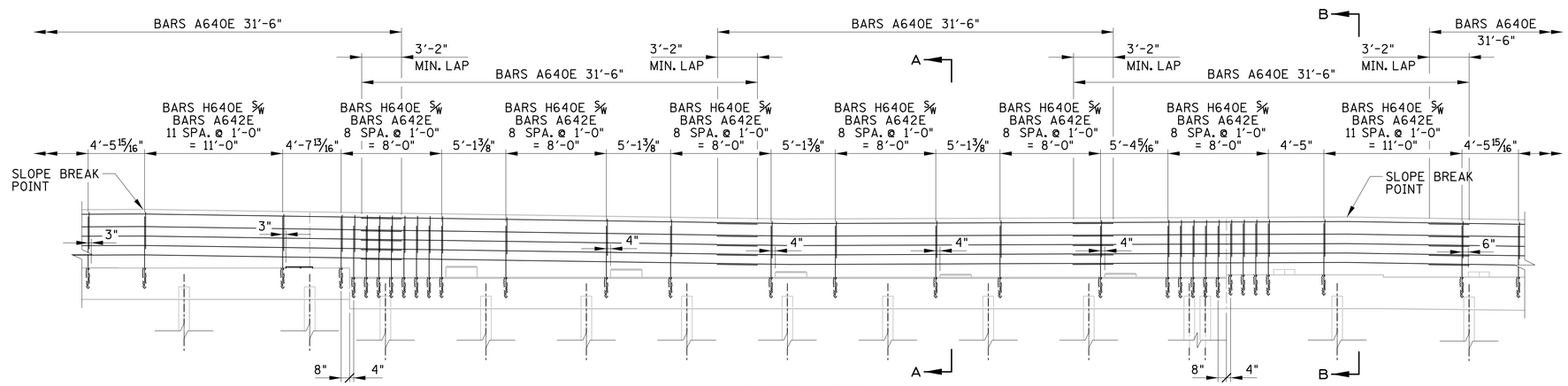

ELEVATION

STATE OF TENNESSEE
DEPARTMENT OF TRANSPORTATION

ABUTMENT NO. 1 DETAILS
SHEET 2 OF 3

BRIDGE NO. 1
I-65 OVER
CSXT RAILROAD
BR. NO. 19-I0065-20.10
DAVIDSON COUNTY
2014

BR-114-152

DESIGNED BY GRESHAM SMITH & PARTNERS DATE 6/13
DRAWN BY GDY DATE 6/13
SUPERVISED BY TAK DATE 6/13
CHECKED BY TQT DATE

GRESHAM SMITH AND PARTNERS

gyoun
Q:\2807116\b\csx rr\8071b16a1-2.sht
1/21/2014
PRF