CONST. NO.		
PROJECT NO.	YEAR	SHEET NO.
19012-4159-04	2014	

REVISIONS

NO.	DATE	BY	BRIEF DESCRIPTION

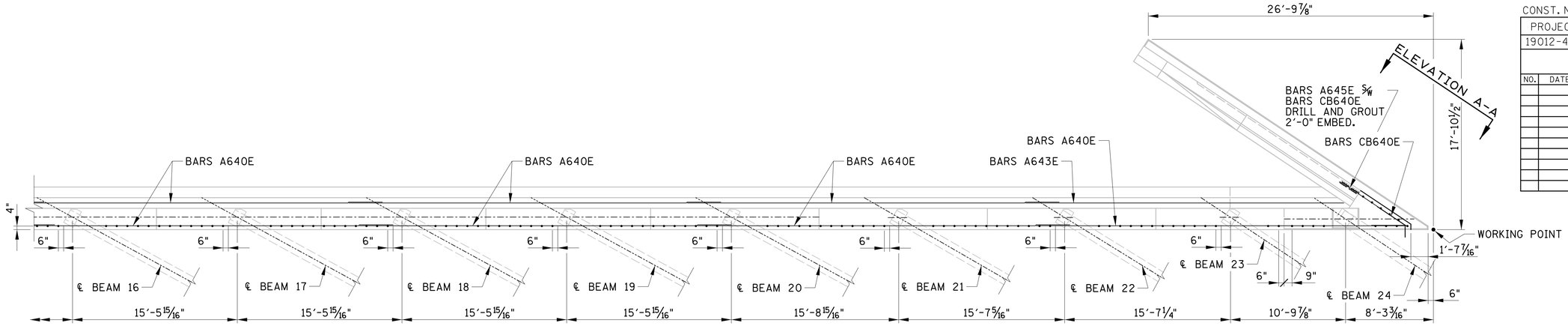

PLAN

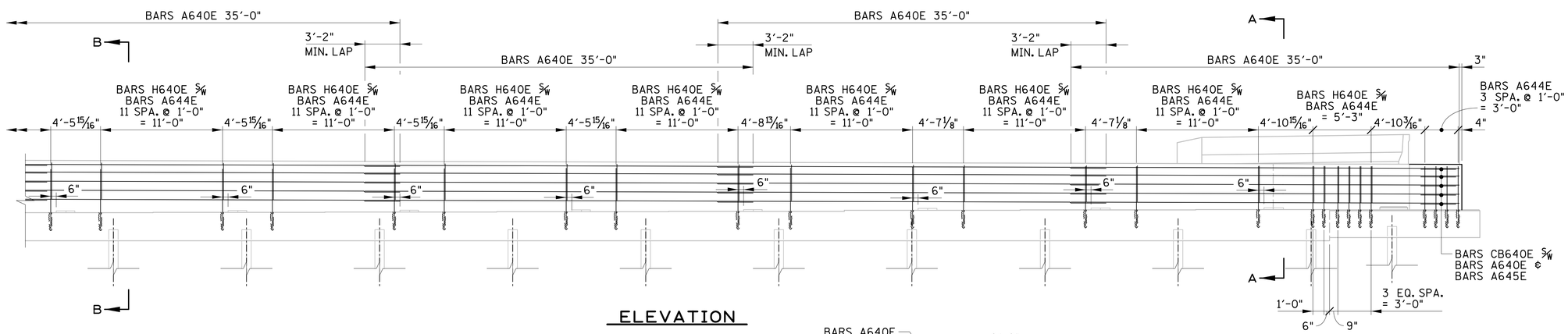

ELEVATION

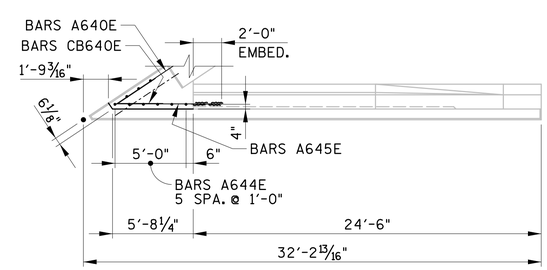

SECTION C-C

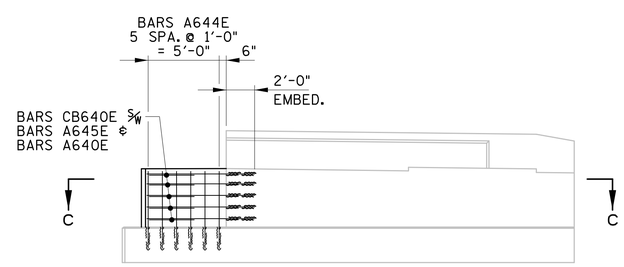

ELEVATION A-A

BILL OF STEEL (ABUTMENT 2) (EPOXY)

BAR	LOCATION	SIZE	NO. REQ'D	BENDING DIMENSIONS A	B	C	D	LENGTH
A640E	BACKWALL	6	53					35'-0"
A641E	BACKWALL	6	6					36'-0"
A642E	BACKWALL	6	6					32'-2"
A643E	BACKWALL	6	1					30'-0"
A644E	BACKWALL	6	266					5'-5"
A645E	WINGWALL	6	5					7'-7"
CB640E	BACKWALL	6	5	3'-2"	3'-2"	2'-7 5/8"		6'-4"
CD640E	BACKWALL	6	5	3'-2"	2'-3 3/8"	2'-1"		5'-5 3/8"
H640E	BACKWALL	6	256	2'-2"	3'-3"			8'-8"

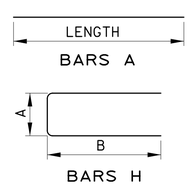

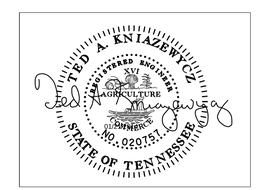

STATE OF TENNESSEE
DEPARTMENT OF TRANSPORTATION

ABUTMENT NO. 2 DETAILS
SHEET 3 OF 3

BRIDGE NO. 1
I-65 OVER
CSXT RAILROAD
BR. NO. 19-10065-20.10
DAVIDSON COUNTY
2014

BR-114-156

DESIGNED BY GRESHAM SMITH & PARTNERS DATE 6/13
DRAWN BY GDY DATE 6/13
SUPERVISED BY TAK DATE 6/13
CHECKED BY TQT DATE

GRESHAM SMITH AND PARTNERS

gyoun
Q:\2807116\b\csx rr\8071b16a2-3.sht
1/21/2014
PRF