CONST. NO.		
PROJECT NO.	YEAR	SHEET NO.
19012-4159-04	2014	

REVISIONS

NO.	DATE	BY	BRIEF DESCRIPTION

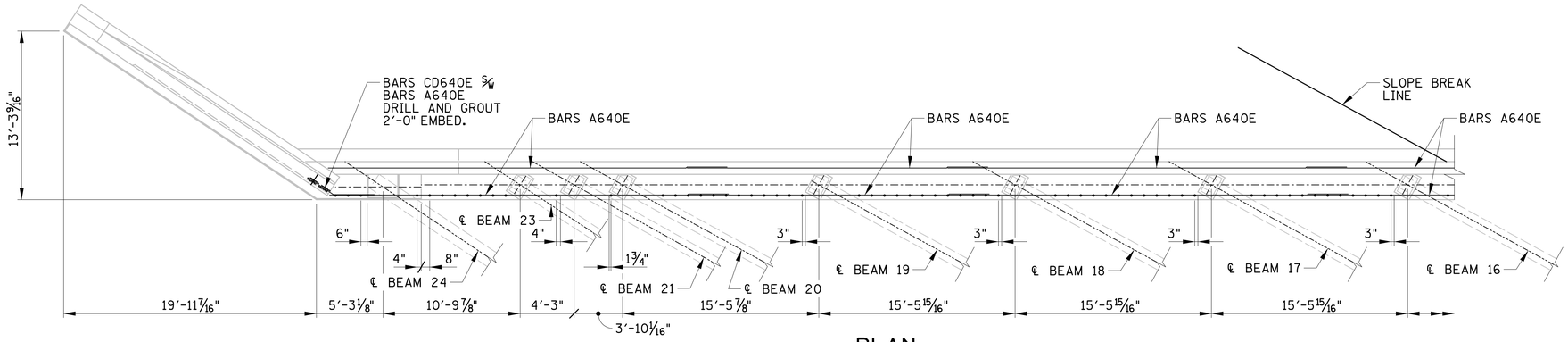

PLAN

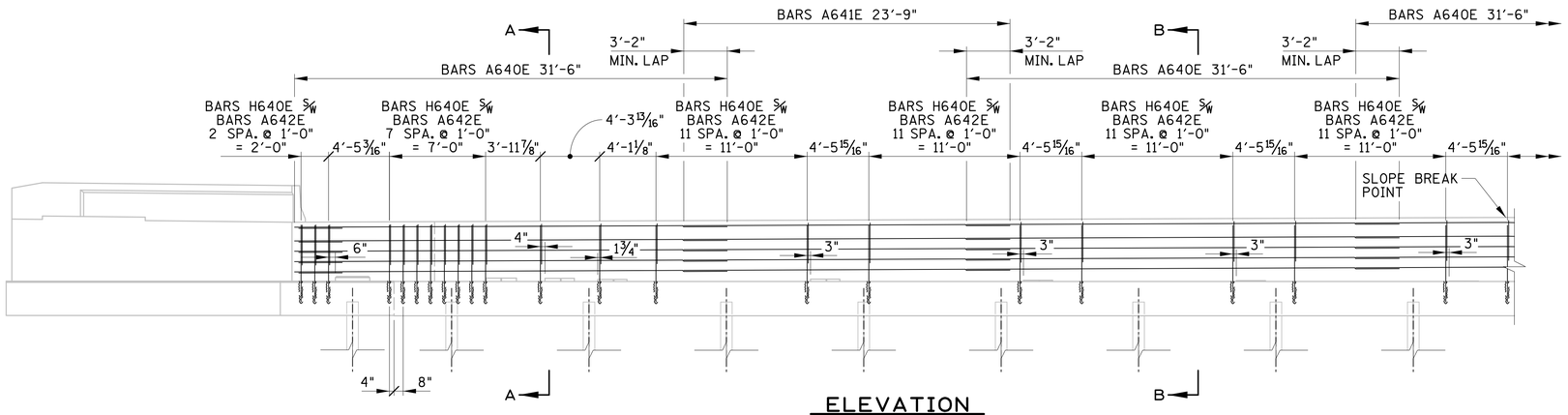

ELEVATION

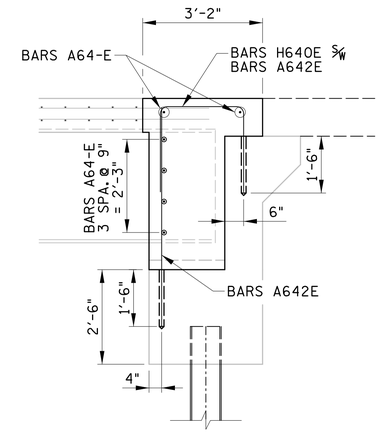

SECTION A-A

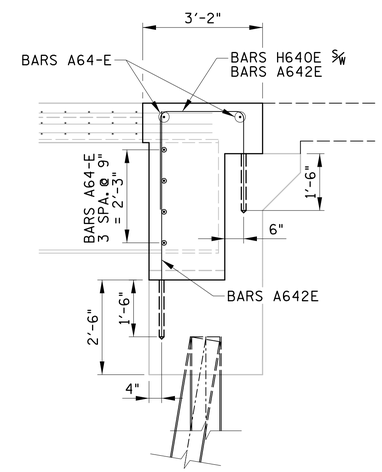

SECTION B-B

ESTIMATED QUANTITIES

604-03.01 CLASS "A" CONCRETE (BRIDGES) (C.Y.)	604-10.05 CONCRETE (S.F.)	604-10.18 REINFORCING STEEL (REPAIRS)	604-10.54 CONCRETE REPAIRS (S.F.)	604-10.63 CONCRETE REPAIRS (CRACKS) (L.F.)
93	10	7,757	10	45

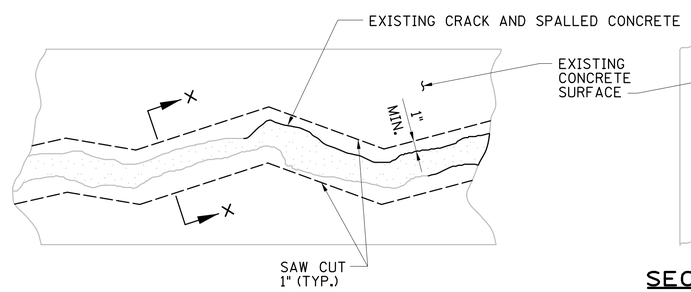

DETAIL SHOWING CRACKED CONCRETE SURFACE TO BE REPAIRED

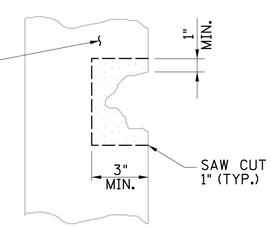

SECTION X-X

NOTE: THE CONTRACTOR MAY OBTAIN A LIST OF ACCEPTABLE BRANDS OF EPOXY CONCRETE FROM THE TENNESSEE DEPARTMENT OF TRANSPORTATION, DIVISION OF MATERIALS AND TEST.

NOTE: COST OF SAW CUTTING, REMOVING SPALLED CONCRETE, NEW EPOXY CONCRETE, LABOR, AND ANY MISCELLANEOUS MATERIALS NECESSARY TO COMPLETE THE REPAIRS AS SHOWN TO BE INCLUDED IN ITEM NO. 604-10.63, CONCRETE REPAIRS (CRACKS), L.F.

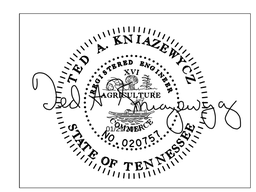

STATE OF TENNESSEE
DEPARTMENT OF TRANSPORTATION

ABUTMENT NO. 1 DETAILS
SHEET 1 OF 3

BRIDGE NO. 1
I-65 OVER
CSXT RAILROAD
BR. NO. 19-10065-20.10
DAVIDSON COUNTY
2014

BR-114-151

DESIGNED BY GRESHAM SMITH & PARTNERS DATE 6/13
DRAWN BY GDY DATE 6/13
SUPERVISED BY TAK DATE 6/13
CHECKED BY TQT DATE

GRESHAM SMITH AND PARTNERS

gyoun
Q:\2807116\b\csx rr\8071b16d1-1.sht
1/21/2014
PRF