TYPE	YEAR	PROJECT NO.	SHEET NO.
MAINT.	2014	19012-4159-04	7

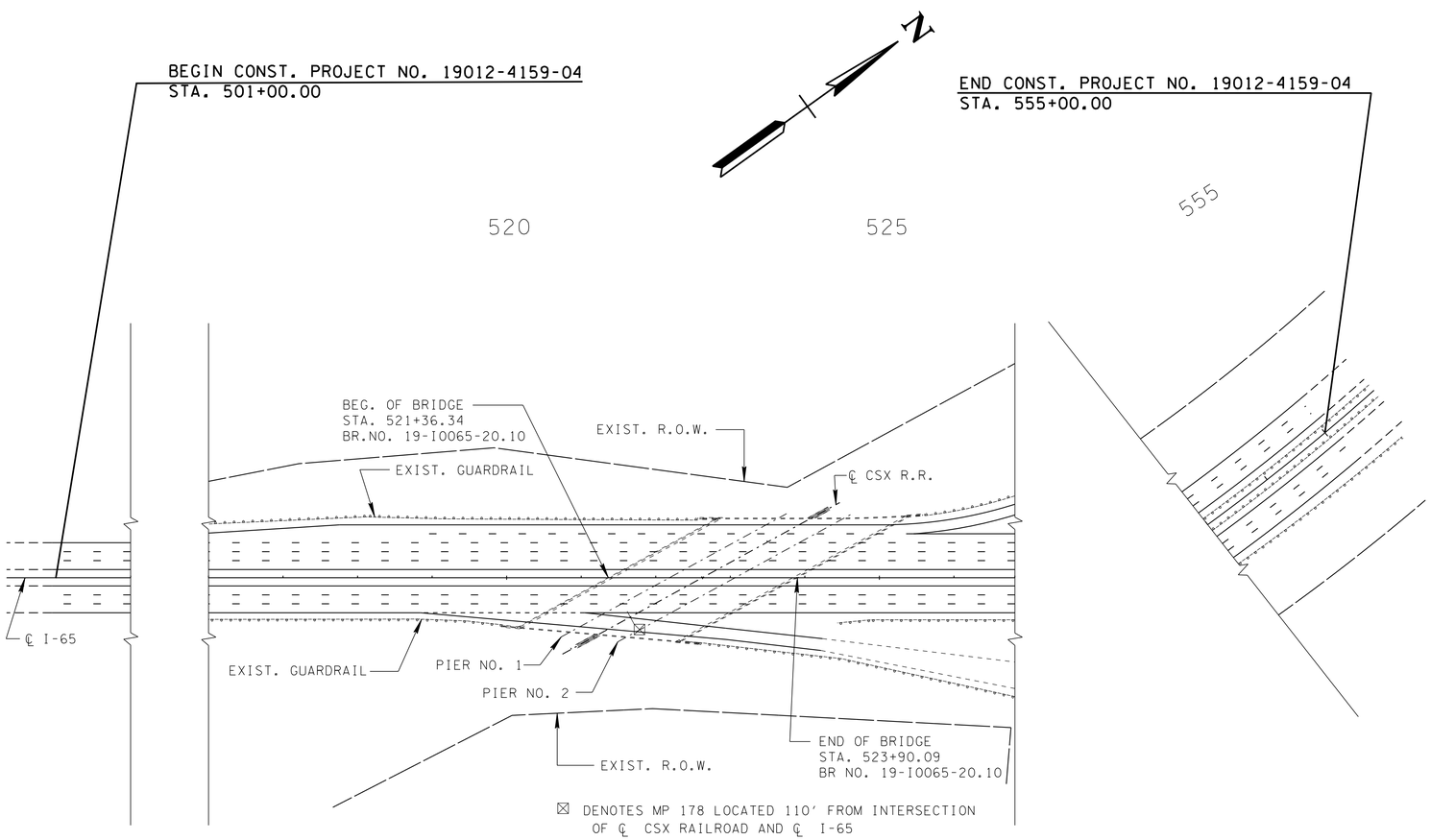

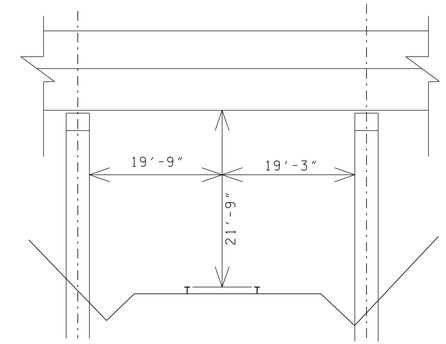

EXISTING CLEARANCES
(TAKEN FROM EXISTING PLANS)

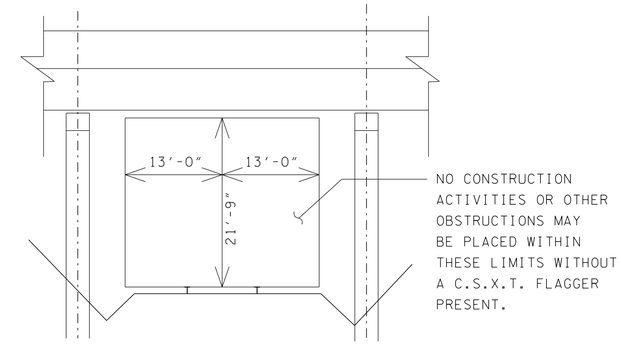

ALLOWABLE TEMPORARY
CONSTRUCTION CLEARANCES

SEALED BY

STATE OF TENNESSEE
DEPARTMENT OF TRANSPORTATION

RAILROAD DETAILS

SCALE: NONE

/21/2014 9:00:22 AM
Q:\2807116\+\DV165007.SHT