CONST. NO.		
PROJECT NO.	YEAR	SHEET NO.
19012-4159-04	2014	

REVISIONS

NO.	DATE	BY	BRIEF DESCRIPTION

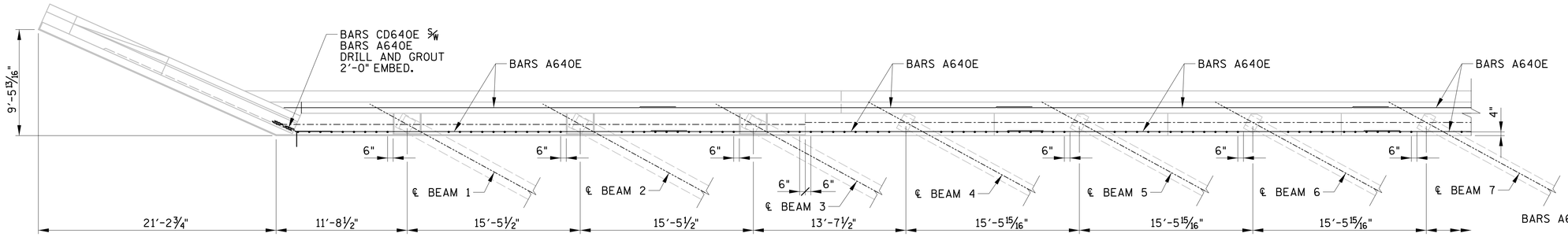

PLAN

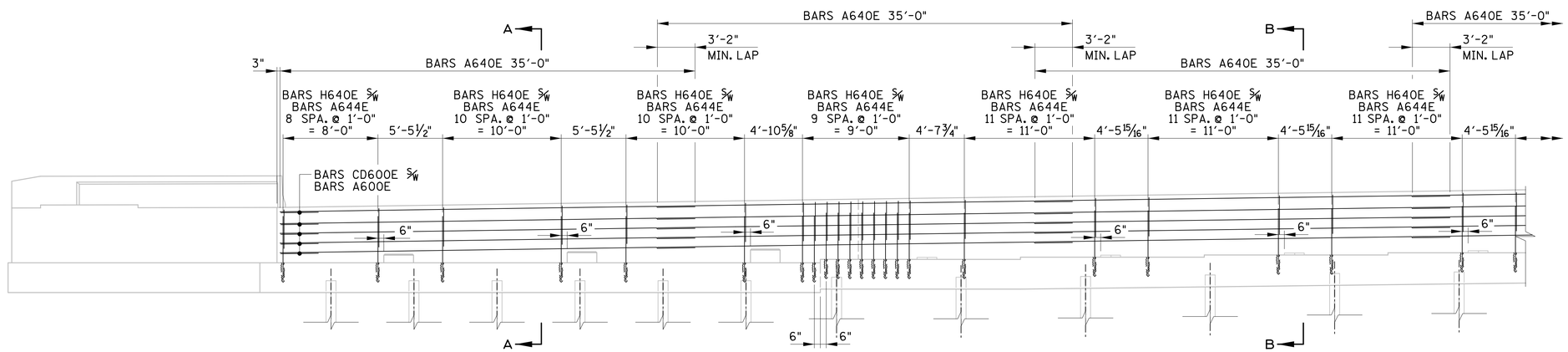

ELEVATION

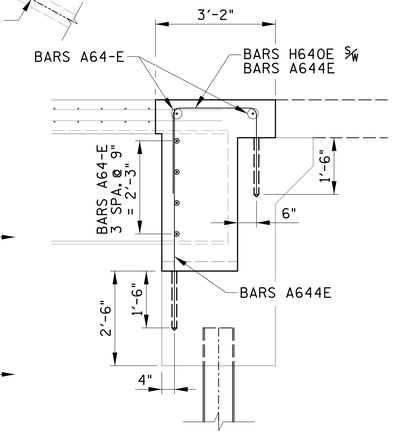

SECTION A-A

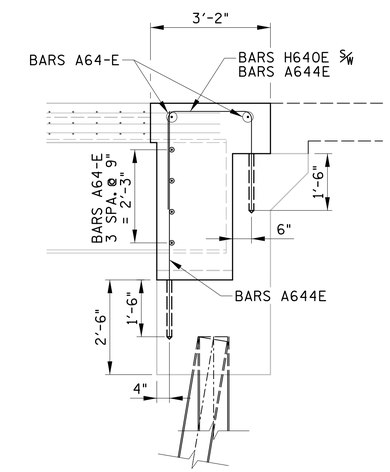

SECTION B-B

NOTE: EPOXY GROUT INTO THE HOLES DRILLED FOR A601E BARS AND H600E BARS

NOTE: FOR PARAPET DETAILS, SEE STANDARD DRAWING STD-1-1.

NOTE: DRILL 1¼" HOLES IN STEEL GIRDERS SO A600E BARS CAN BE CONTINUOUS FULL LENGTH.

ESTIMATED QUANTITIES

604-03.01 CLASS "A" CONCRETE (BRIDGES) (C.Y.)	604-10.05 CONCRETE (S.F.)	604-10.18 REINFORCING STEEL (REPAIRS)	604-10.54 CONCRETE REPAIRS (S.F.)	604-10.63 CONCRETE REPAIRS (CRACKS) (L.F.)
108	10	9,088	10	36

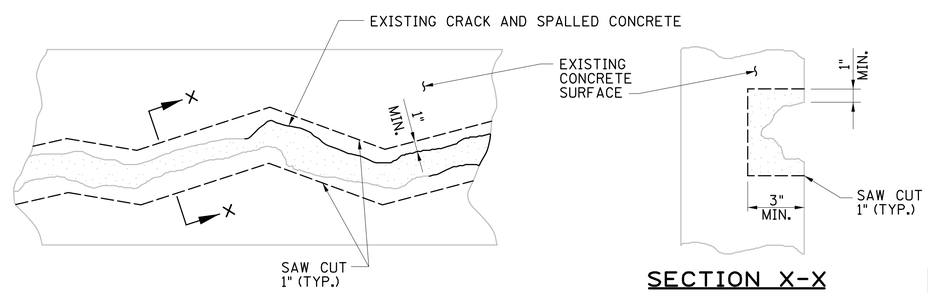

SECTION X-X

DETAIL SHOWING CRACKED CONCRETE SURFACE TO BE REPAIRED

NOTE: THE CONTRACTOR MAY OBTAIN A LIST OF ACCEPTABLE BRANDS OF EPOXY CONCRETE FROM THE TENNESSEE DEPARTMENT OF TRANSPORTATION, DIVISION OF MATERIALS AND TEST.

NOTE: COST OF SAW CUTTING, REMOVING SPALLED CONCRETE, NEW EPOXY CONCRETE, LABOR, AND ANY MISCELLANEOUS MATERIALS NECESSARY TO COMPLETE THE REPAIRS AS SHOWN TO BE INCLUDED IN ITEM NO. 604-10.63, CONCRETE REPAIRS (CRACKS), L.F.

NOTE: EPOXY MATERIAL FOR CRACK REPAIRS IN EXISTING BRIDGE DECK SHALL BE OF A TYPE TO PERMIT COMPLETE PENETRATION AND FILLING OF CRACK VOID SPACE.

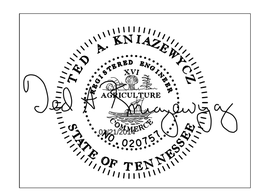

STATE OF TENNESSEE
DEPARTMENT OF TRANSPORTATION

ABUTMENT NO. 2 DETAILS
SHEET 1 OF 3

BRIDGE NO. 1
I-65 OVER
CSXT RAILROAD
BR. NO. 19-I0065-20.10
DAVIDSON COUNTY
2014

BR-114-154

DESIGNED BY	GRESHAM SMITH & PARTNERS	DATE	6/13
DRAWN BY	GDY	DATE	6/13
SUPERVISED BY	TAK	DATE	6/13
CHECKED BY	TQT	DATE	

GRESHAM SMITH AND PARTNERS

gyoun
Q:\2807116\b\cosx rr\807lb16a2-1.sht
1/21/2014
PRF