TENNESSEE D.O.T.
DESIGN DIVISION
FILE NO.

TYPE	YEAR	PROJECT NO.	SHEET NO.
FED. AID PROJ. NO.	2014	STPHSIP-205(24)	B1
STATE PROJ. NO.	2014	79035-4216-04	
BRIDGE REPAIR	2014	79035-4215-04	

TABULATION OF BRIDGE RELATED WORK AND ESTIMATED QUANTITIES

LOCATION OF BRIDGE AND BRIDGE NUMBER	REFERENCE DRAWINGS TO BE PRINTED WITH CONTRACT DRAWINGS	TYPE OF WORK	604-10.44 EXPANSION JOINT REPAIRS LF
79-SR205-13.05/ CYPRESS CREEK CANAL		EXPANSION JOINT REPAIRS	72
		TOTAL	72

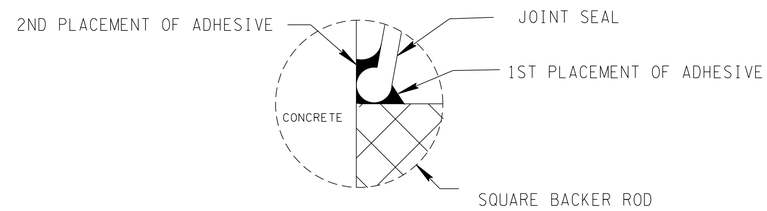

DETAIL A

JOINT SEAL ADHESIVE TO BE RUN ALONG THE CORNER CREATED BY THE BACKER ROD AND THE VERTICAL FACE PRIOR TO PLACEMENT OF JOINT SEAL AND SECOND APPLICATION OF ADHESIVE.

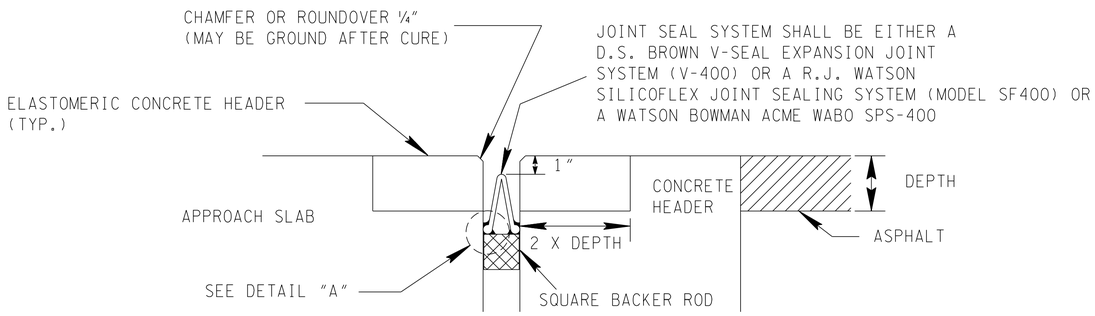

JOINT SEAL DETAIL

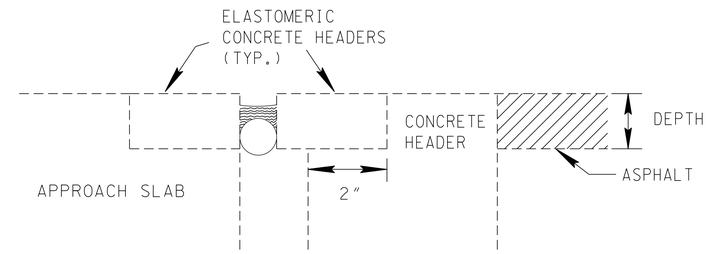

EXISTING EXPANSION JOINT

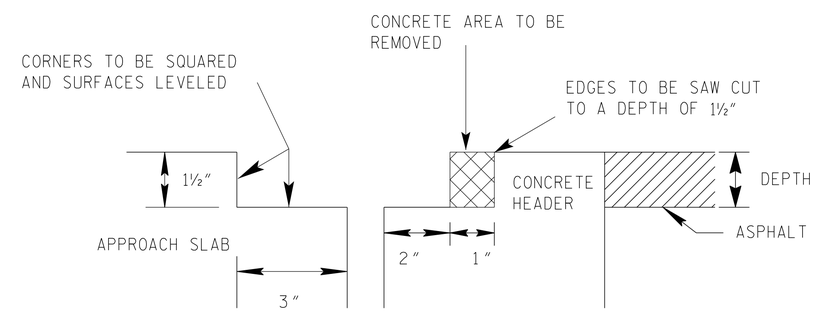

NEW EXPANSION JOINT DIMENSIONS

NOTE: BEFORE INSTALLING NEW JOINT, THE CONCRETE AT JOINT LOCATION SHALL BE CUT AND SHAPED FOR THE NEW JOINT DIMENSION. COST OF SAW CUTTING, CONCRETE REMOVAL, LABOR, AND ANY MISCELLANEOUS MATERIALS NECESSARY TO COMPLETE THE REPAIRS AS SHOWN SHALL BE INCLUDED IN ITEM NO. 604-10.44 EXPANSION JOINT REPAIRS.

EXPANSION JOINT SYSTEM:

THE JOINT SEAL SYSTEM SHALL BE EITHER A D.S. BROWN V-SEAL EXPANSION JOINT SYSTEM (V-400) OR A R.J. WATSON SILICOFLEX JOINT SEALING SYSTEM (MODEL SF400) OR A WATSON BOWMAN ACME (WABO SPS-400). FOR THE JOINT HEADER MATERIAL REFER TO THE (TDOT QUALIFIED PRODUCTS LIST NO. 9 SECTION A).THE JOINT SEAL SYSTEM SHALL BE INSTALLED UNDER DIRECT SUPERVISION OF AN AUTHORIZED TECHNICIAN PROVIDED BY THE JOINT SEAL SUPPLIER. FOR EACH JOINT AT EACH BRIDGE AND FOR EACH BRIDGE LOCATION WITHIN THE PROJECT, THE TECHNICIAN MUST APPROVE ALL ASPECTS OF THE GEOMETRY AND PREPARATION, INCLUDING GRINDING AND/OR GROOVING, PRIOR TO ANY JOINT MATERIAL INSTALLATION.

THIS INCLUDES THE REMOVAL OF THE EXISTING EXPANSION JOINT SYSTEM AND THE INSTALLATION OF THE NEW EXPANSION JOINT SYSTEM. THE NEW SYSTEM CONSISTS OF TWO ELASTOMERIC CONCRETE HEADERS, BACKER ROD, AND JOINT SEAL. DETAILED MANUFACTURER'S SPECIFICATIONS AND INSTALLATION PROCEDURES SHALL BE SUBMITTED TO THE PROJECT ENGINEER PRIOR TO CONSTRUCTION OF THE JOINT. THE MANUFACTURER AND THE CONTRACTOR SHALL BE REPONSIBLE FOR THE WORKMANSHIP AND PERFORMANCE OF THE INSTALLED JOINT

FOLLOWING THE REMOVAL OF EXISTING JOINT MATERIAL,ALL AREAS SHALL BE THOROUGHLY CLEANED OF FOREIGN MATERIAL FOR THE FULL DEPTH OF THE EXISTING JOINT OPENING. ABRASIVE BLAST CLEANING MUST BE PERFORMED ON ALL SURFACES RECEIVING ANY NEW MATERIAL FOR THE NEW EXPANSION JOINT SYSTEM.

THE COST FOR REMOVING THE OLD JOINT SYSTEM AND INSTALLING THE NEW JOINT SEAL SYSTEM, LABOR, AND ANY MISCELLANEOUS MATERIALS NECESSARY TO INSTALL THE NEW EXPANSION JOINT TO BE INCLUDED UNDER ITEM NO. 604-10.44 EXPANSION JOINT REPAIRS, L.F.

POWER DRIVEN HAND TOOLS:

POWER DRIVEN HAND TOOLS USED FOR THE REMOVAL OF CONCRETE IN MAKING EXPANSION JOINT REPAIR AREAS ARE SUBJECT TO THE FOLLOWING RESTRICTIONS:
(1) ONLY HAND HELD GAS OR ELECTRIC CONCRETE & MASONRY SAW SHALL BE USED.
(2) CHIPPING HAMMERS UP TO THE 15 lb. CLASS SHALL BE USED.

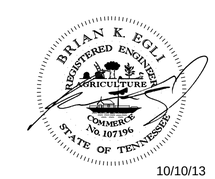

10/10/13

STATE OF TENNESSEE
DEPARTMENT OF TRANSPORTATION

BRIDGE TABULATION AND ESTIMATED QUANTITIES