TYPE	YEAR	PROJECT NO.	SHEET NO.
RESURF.	2014	NH/HSIP-204(8)	3

TENNESSEE D.O.T.
DESIGN DIVISION
FILE NO.

TYPICAL SECTION

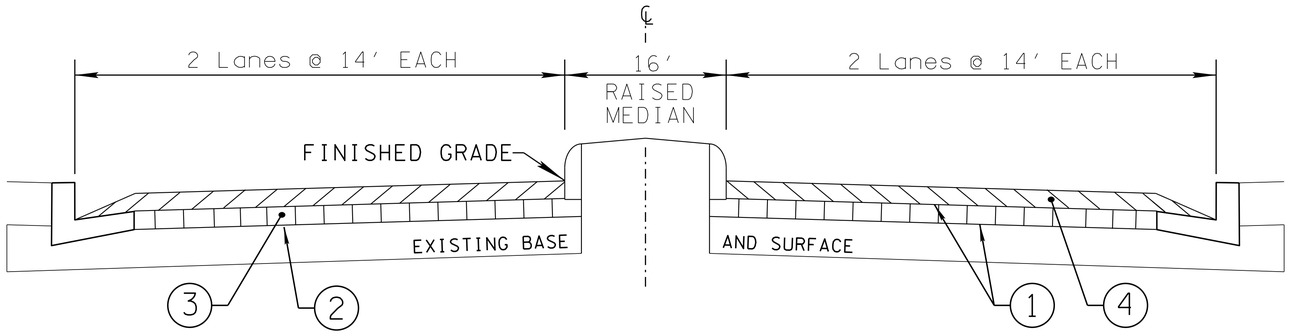

FROM: L.M. 1.84 TO L.M. 2.53

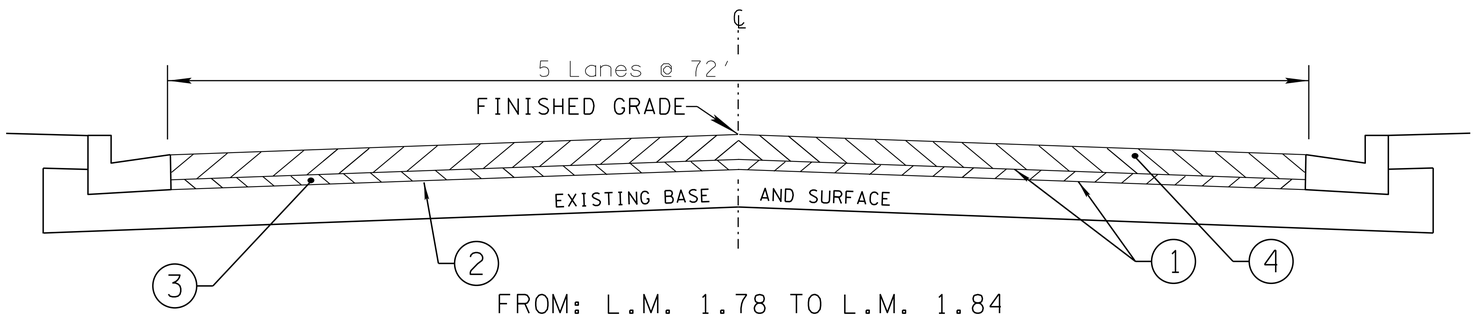

FROM: L.M. 1.78 TO L.M. 1.84

FROM: L.M. 2.53 TO L.M. 4.75

DETAIL OF BREAKOUT

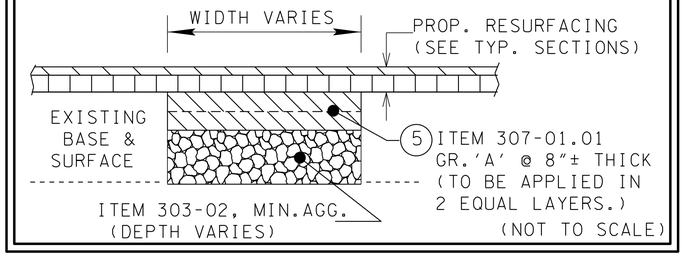

(NOT TO SCALE)

PROPOSED PAVEMENT SCHEDULE

1. TACK COAT (TC)
   ITEM 403-01 BITUMINOUS MATERIAL FOR TACK COAT (TC)
   (AT 0.07 GAL./S.Y. FOR GENERAL USE)
   (AT 0.10 GAL./S.Y. FOR MILLING-COLD PLANE)
2. COLD PLANING @ 1.50"± THICK (APPROX. 158 LBS./S.Y.)
   ITEM 415-01.02 COLD PLANING BITUMINOUS PAVEMENT
3. BITUMINOUS COURSE (LEVELING) @ 0.40"± THICK (APPROX. 46.00 LBS./S.Y.)
   ITEM 307-01.15 ACS MIX (PG64-22) (BPMLC-HM) GRADING CS
4. ASPHALTIC CONCRETE SURFACE (ACS) @ 1.25"± THICK (APPROX. 132.50 LBS./S.Y.)
   ITEM 411-02.10 ACS MIX (PG70-22) GRADING "D"
5. BITUMINOUS BASE COURSE (BLACK BASE) @ 8"± THICK (APPROX. 920.0 LBS./S.Y.)
   ITEM 307-01.01 ASPHALT CONCRETE MIX (PG64-22)(BPMB-HM) GRADING "A"
   (THIS ITEM IS TO BE USED FOR BREAKOUT ONLY)

SEALED BY

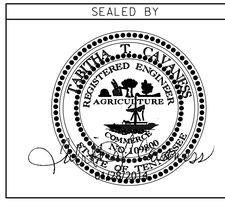

STATE OF TENNESSEE
DEPARTMENT OF TRANSPORTATION

TYPICAL SECTIONS
(NOT TO SCALE)

27-JAN-2014 12:51
\\j04wf01.tdot.state.tn.us\04SHARED\Design\DESIGN\RESURF REG4 PROJ\SHELBY\SR204\LM 1.78-LM 4.75\79 SR204 LM1.78 TYPICAL.dgn