TYPE	YEAR	COUNTY	FIGURE NO.
RESURF	2014	NH/HSIP-1(308)	7F

SULLIVAN CO.
82002-3281-94, 82002-8281-14

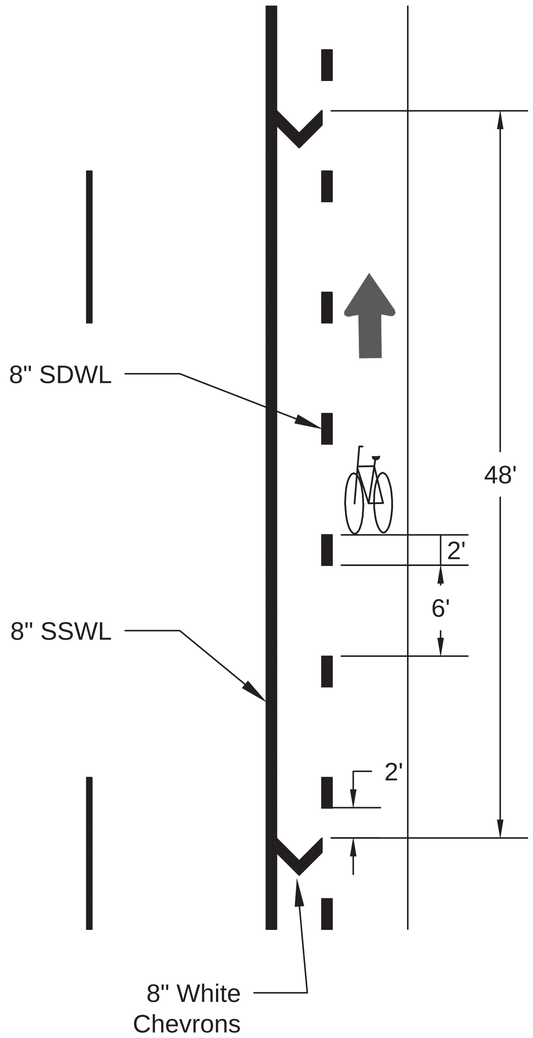

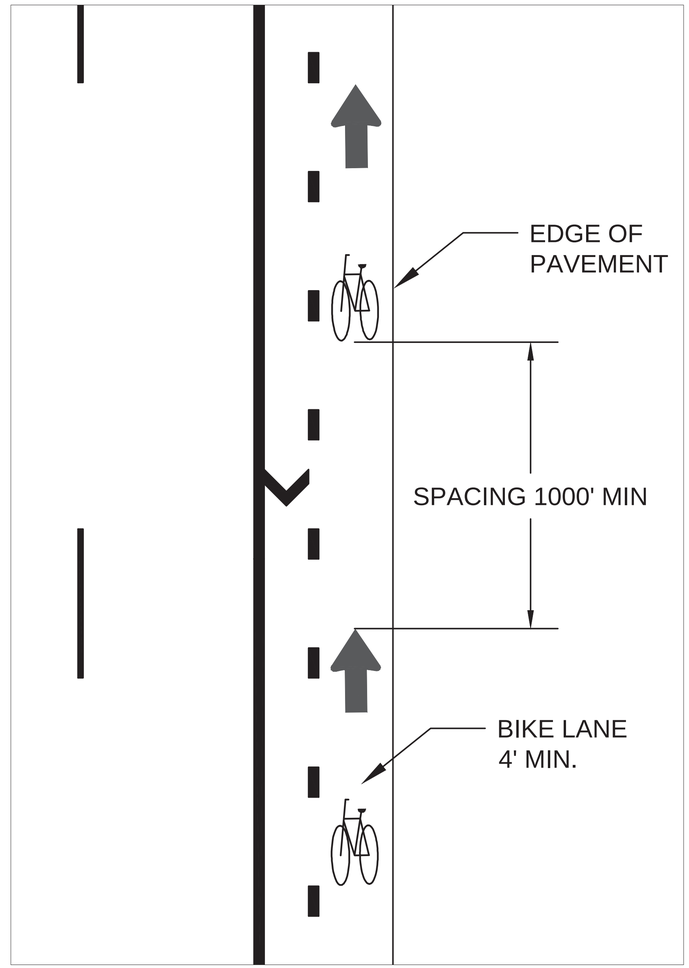

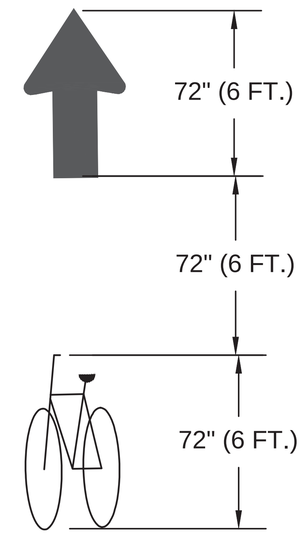

CITY OF KINGSPORT
ENGINEERING DEPARTMENT

TDOT RESURFACING:
SR-1 FROM FAIRMONT AVE
TO BROOKSIDE DR

FIGURE 7: BIKE LANE STRIPING

DATE: NOVEMBER 2012