| TYPE | YEAR | PROJECT NO. | SHEET NO. |
|---|---|---|---|
| RESURF. | 2014 | HSIP-211(13) | 3 |
| | | | |
| | | | |
| | | | |

## ALTERNATE AA1

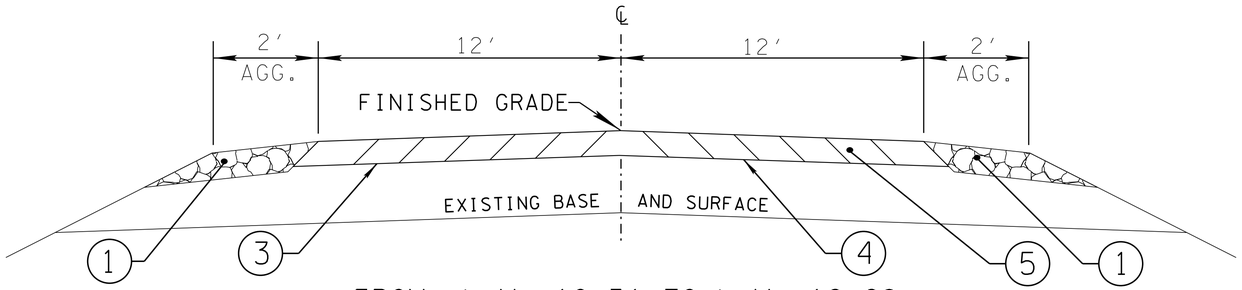


FROM: L.M. 10.31 TO L.M. 16.68

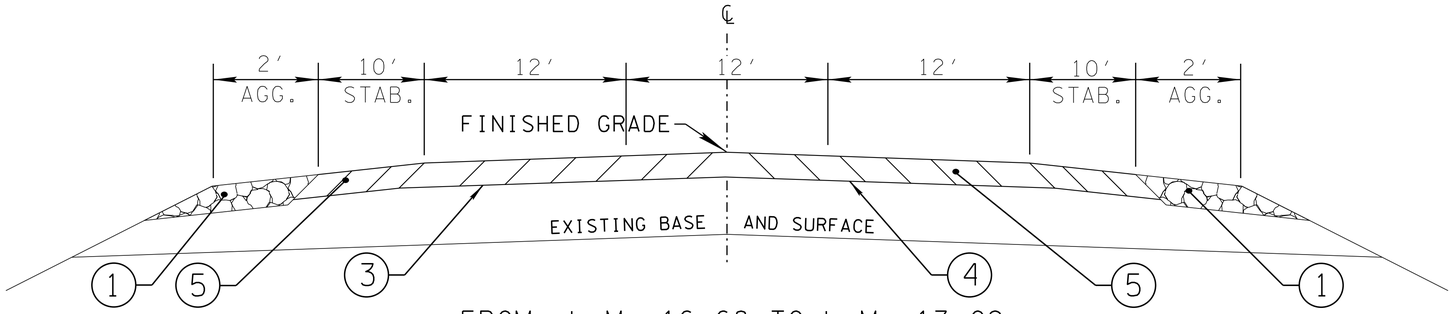


FROM: L.M. 16.68 TO L.M. 17.09

## BRIDGE NOTE

THE CONTRACTOR SHALL:

COLD PLANE 1.25″ DEPTH AND PAVE ACROSS EXISTING STRUCTURES WITH PLANS QUANTITIES ONLY @ L.M. 14.92, & L.M. 15.63 (165′)

## ALTERNATE AA2

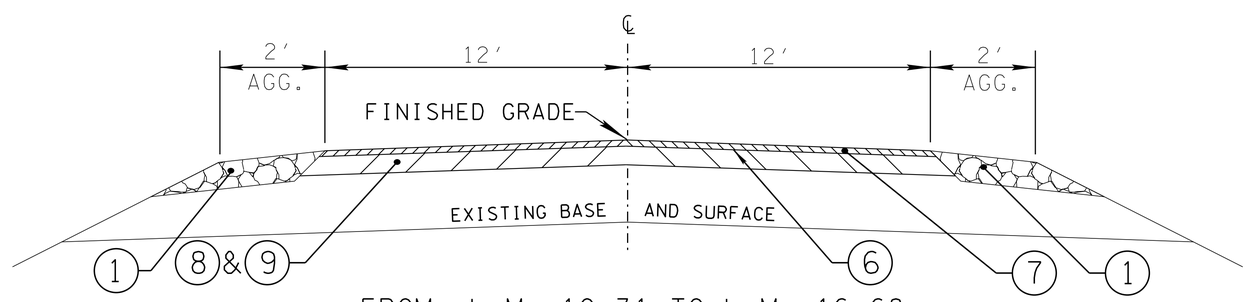


FROM: L.M. 10.31 TO L.M. 16.68

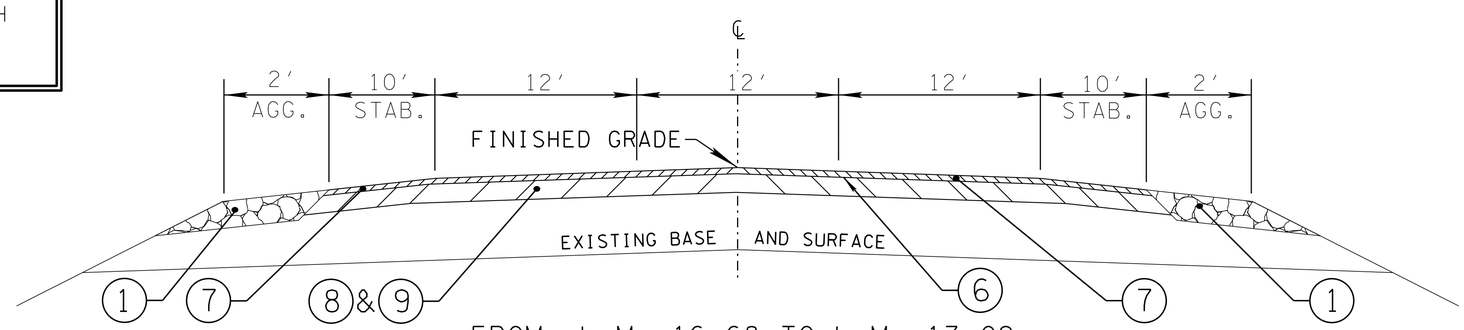


FROM: L.M. 16.68 TO L.M. 17.09

## BRIDGE NOTE

THE CONTRACTOR SHALL:

PAVE ACROSS EXISTING STRUCTURES WITH PLANS QUANTITIES ONLY @ L.M. 14.92 & L.M 15.63 (165′)

SEE PROPOSED PAVEMENT SCHEDULE ON SHEET 3A

SEALED BY

STATE OF TENNESSEE
DEPARTMENT OF TRANSPORTATION

# TYPICAL SECTIONS

(NOT TO SCALE)

1-DEC-2013 14:22
\\j04wf01.tdot.state.tn.us\04SHARED\Design\DESIGN\RESURF REG4 PROJ\DYER\SR 211\LM10-3I-LM17-09\232ILM10-3ITYPICAL.dgn