| TYPE | YEAR | PROJECT NO. | SHEET NO. |
|---|---|---|---|
| RESURF. | 2014 | HSIP-211(13) | 3B |
| | | | |
| | | | |
| | | | |

REVISED: 3/6/14 ADDED SHEET 3B WITH ALTERNATE AA3.

REVISED: 3/7/14 CORRECTED PAVEMENT SCHEDULE NUMBERS.

# ALTERNATE AA3

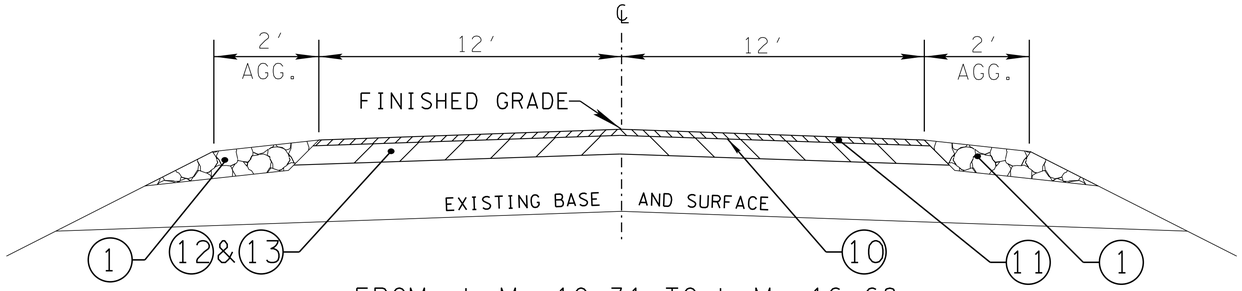


FROM: L.M. 10.31 TO L.M. 16.68

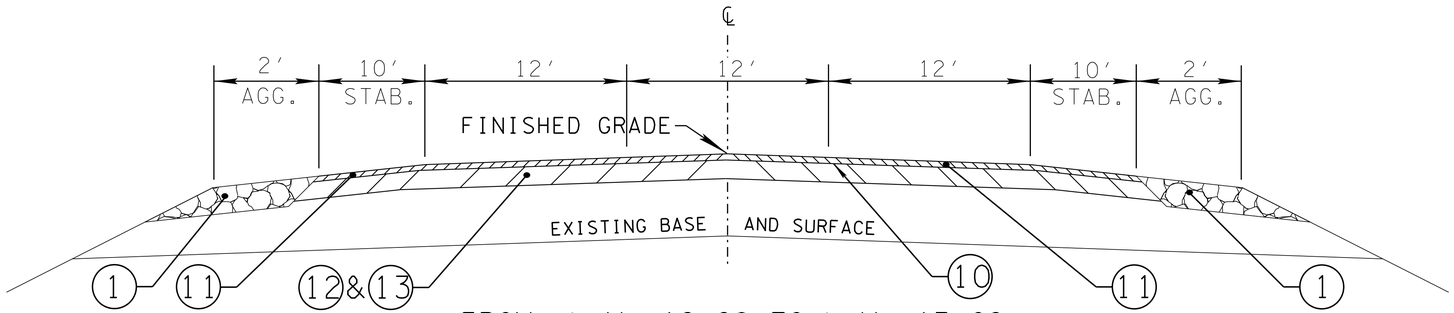


FROM: L.M. 16.68 TO L.M. 17.09

## BRIDGE NOTE

THE CONTRACTOR SHALL:

PAVE ACROSS EXISTING STRUCTURES WITH PLANS QUANTITIES ONLY @ L.M. 14.92 & L.M 15.63 (165')

SEE PROPOSED PAVEMENT SCHEDULE ON SHEET 3A

SEALED BY

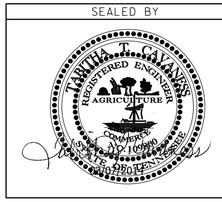


STATE OF TENNESSEE
DEPARTMENT OF TRANSPORTATION

# TYPICAL SECTIONS

(NOT TO SCALE)

07-MAR-2014 10:12
\\j04wf01.tdot.state.tn.us\04SHARED\Design\DESIGN\RESURF REG4 PROJ\DYER\SR 211\LMI0-3I-LMI7-09\232ILMI0-3I TYPICAL.dgn