TENNESSEE D.O.T.
DESIGN DIVISION
FILE NO.

TENN.	YEAR	SHEET NO.
	2014	1
FED. AID PROJ. NO.		
STATE PROJ. NO.	72003-4201-04	

STANDARD DRAWING REVISION CHANGE 5-20-14

STATE OF TENNESSEE
DEPARTMENT OF TRANSPORTATION
BUREAU OF ENGINEERING

RHEA COUNTY

STATE ROUTE 378 OVER LITTLE RICHLAND CREEK

BRIDGE REPAIR

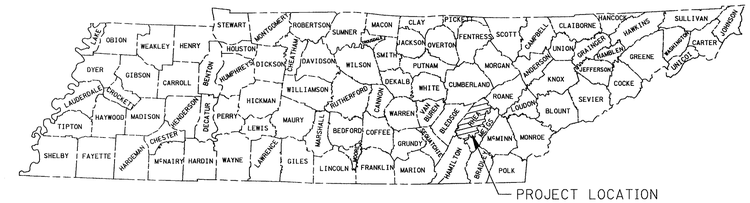

Index Of Sheets

SHEET NO.	DESCRIPTION
1	TITLE SHEET
1A	PROJECT COMMITTMENT
2	BRIDGE ESTIMATED QUANTITIES AND GENERAL NOTES
2A	ESTIMATED ROADWAY QUANTITIES AND GENERAL NOTES
2B	EROSION CONTROL PLAN AND PAVEMENT DETAILS
2C	TRAFFIC CONTROL DETOUR PLAN
U1-1	UTILITY SHEET
U1-2	UTILITY SHEET

DRAWING NO.	CURRENT REVISION DATE	DESCRIPTION
STANDARD ROADWAY DRAWINGS		
RD-A-1	12-18-99	STANDARD ABBREVIATIONS
RD-L-1	10-26-94	STANDARD LEGEND
SAFETY APPURTENANCES AND FENCE		
S-GR31-1		W-BEAM GUARDRAIL
S-GRC-1		GUARDRAIL CONNECTION TO BRIDGE ENDS OR BARRIER WALL
S-PL-3		SAFETY PLAN: MINIMUM INSTALLATION AT BRIDGE ENDS
S-GRT-3		TYPE 21 GUARDRAIL TERMINAL
S-GRT-3D		TYPE 21 GUARDRAIL TERMINAL (DETAILS)
S-GRA-3		GUARDRAIL ANCHOR FOR TYPE 21, 13 AND IN-LINE TERMINALS
S-GRT-3P		EARTH PAD FOR TYPE 21 TERMINAL
TRAFFIC CONTROL APPURTENANCES		
T-M-1	11-01-11	DETAILS OF PAVEMENT MARKINGS FOR CONVENTIONAL ROADS AND MARKING ABBREVIATIONS
T-M-2	1-15-13	DETAILS OF PAVEMENT MARKINGS FOR CONVENTIONAL ROADS
T-FAB-1	5-27-97	FLASHING YELLOW ARROW BOARD
EROSION PREVENTION & SEDIMENT CONTROL		
EC-STR-3C	8-01-12	SILT FENCE WITH WIRE BACKING
EC-STR-3E	4-01-08	SILT FENCE FABRIC JOINING DETAILS

STATE ROUTE 378 OVER LITTLE RICHLAND CK.
BRIDGE NO. 72-SR378-1.58

STATE HIGHWAY NO.

F.A.H.S. NO. NA

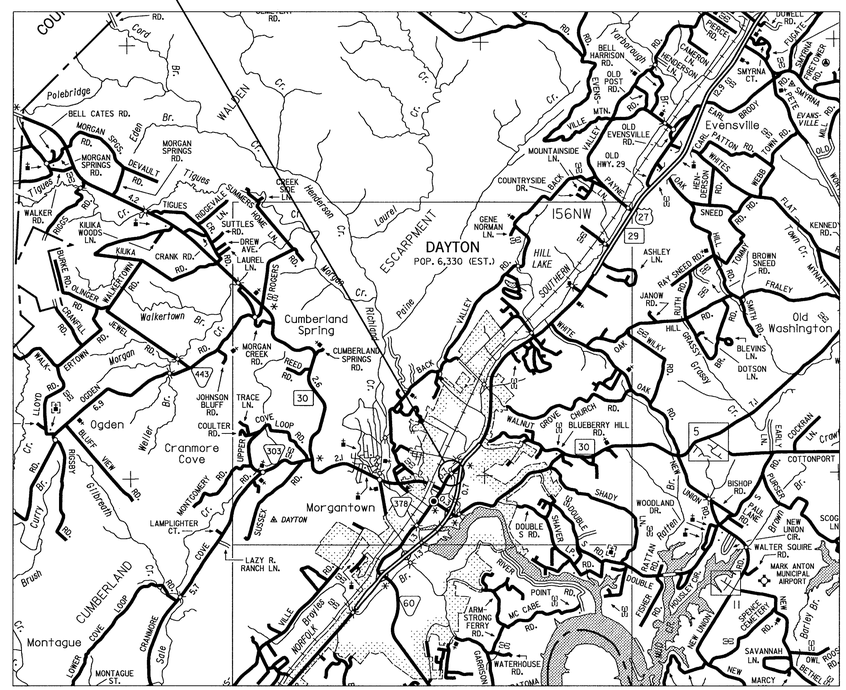

NOT TO SCALE

ROUTE	ADT	YEAR	POSTED SPEED LIMIT
STATE ROUTE 378	6403	2014	30 MPH

LIST OF BRIDGE DRAWINGS

DWG. NO.	REV.	DESCRIPTION
BR-116-66		LAYOUT OF BRIDGE TO BE REPAIRED
BR-116-67		BRIDGE ESTIMATED QUANTITIES AND GENERAL NOTES
BR-116-68		SUPERSTRUCTURE
BR-116-69		SLAB PLAN AND DETAILS
BR-116-70		FRAMING PLAN AND DETAILS
BR-116-71		PRESTRESSED BOX BEAMS
BR-116-72		SUBSTRUCTURE REPAIR
BR-116-73		REPAIR DETAILS
BR-116-74		PIER MODIFICATIONS
BR-116-75		ABUTMENT MODIFICATION

LIST OF REFERENCE DRAWINGS

(TO BE PRINTED WITH PLANS)

DWG. NO.	DESCRIPTION
G-8-38	LAYOUT OF WIDENING
G-9-39	WIDENING DETAILS SPAN NO. 1-4
G-8-40	WIDENING DETAILS OF ABUTMENTS NO. 1 & 2
G-8-41	WIDENING DETAILS OF PIERS NO. 1-3
E-12-105	HANDRAIL
D-7-119	STANDARD CONCRETE ABUTMENT
D-7-121	STANDARD CONCRETE ABUTMENT
A-0-10	STANDARD CONCRETE PIER
A-6-61	STANDARD CONCRETE DECK

UNOFFICIAL SET

NOT FOR BIDDING

SPECIAL NOTES

PROPOSALS MAY BE REJECTED BY THE COMMISSIONER IF ANY OF THE UNIT PRICES CONTAINED THEREIN ARE OBVIOUSLY UNBALANCED, EITHER EXCESSIVE OR BELOW THE REASONABLE COST ANALYSIS VALUE.

THIS PROJECT TO BE CONSTRUCTED UNDER THE STANDARD SPECIFICATIONS OF THE TENNESSEE DEPARTMENT OF TRANSPORTATION DATED MARCH 1, 2006 AND ADDITIONAL SPECIFICATIONS AND SPECIAL PROVISIONS CONTAINED IN THE PLANS AND IN THE PROPOSAL CONTRACT.

TDOT STRUCTURAL SPECIALIST 2 VALERIE NEWBERRY

DESIGNER TRCWW, INC. CHECKED BY W. PETRONE

P.E. NO. 72003-4201-04

PIN NO. 119957.00

STANDARD BRIDGE DRAWINGS

STD-1-2SS		STEEL SLIDER PLATE ASSEMBLIES FOR SINGLE SLOPE CONCRETE PARAPET AND BRIDGE DECK DRAIN DETAILS
STD-4-1	4-08-05	STD. PRECAST PRESTRESSED BRIDGE DECK PANELS GENERAL DETAILS
STD-4-2	4-08-05	STD. PRECAST PRESTRESSED BRIDGE DECK PANELS DESIGN CRITERIA
STD-4-3	3-02-02	STD. PRECAST PRESTRESSED BRIDGE DECK PANELS GENERAL DETAILS
STD-4-4	6-10-96	STD. PRECAST PRESTRESSED BRIDGE DECK PANELS CONSTRUCTION DETAILS
STD-6-1	11-01-10	STANDARD SEISMIC DETAILS
STD-9-1	10-07-08	REINFORCING BAR SUPPORT DETAILS FOR CONCRETE SLABS
STD-11-1	5-01-14	BRIDGE RAILING WITH STRUCTURAL TUBING
STD-14-3	10-15-08	STD. DETAILS FOR PRESTRESSED BOX BEAMS

WANFORD A. PETRONE
REGISTERED ENGINEER
AGRICULTURE
NO. 137174
5-22-14
STATE OF TENNESSEE

APPROVED: Paul D. Degges
PAUL D. DEGGES, CHIEF ENGINEER

DATE

APPROVED:
JOHN SCHROER, COMMISSIONER

U.S. DEPARTMENT OF TRANSPORTATION
FEDERAL HIGHWAY ADMINISTRATION

APPROVED:

DIVISION ADMINISTRATOR DATE

TENNESSEE D.O.T.
DESIGN DIVISION
FILE NO.

TYPE	YEAR	PROJECT NO.	SHEET NO.
CONST.	2014	72003-4201-04	1A

PROJECT COMMITMENTS

COMMITMENT ID	SOURCE DIVISION	DESCRIPTION	STA./LOCATION
EDHZ001	ENVIRONMENTAL DIVISION, HAZARDOUS MATERIALS	TO MINIMIZE THE RISK TO CONSTRUCTION WORKERS, TDOT IS COMMITTED TO THE REMOVAL OF ASBESTOS-CONTAINING MATERIALS (ACM) FROM BRIDGES THAT ARE BEING DEMOLISHED, REHABILITATED. OR REPAIRED. BRIDGE NO. 72SR029003 (SR-378 BRIDGE OVER LITTLE RICHLAND CREEK, LM 1.58) HAS ACM IN THE DECK DRAINS. IF THIS MATERIAL IS DISTURBED DURING REPAIR ACTIVITIES, ABATEMENT SHOULD BE ACCOMPLISHED PER SP202ACM SPECIAL PROVISION REGARDING REMOVAL OF ASBESTOS-CONTAINING MATERIALS. ACM ABATEMENT SHOULD BE COMPLETED PRIOR TO ANY DEMOLITION ACTIVITIES.	BRIDGE DECK DRAIN LOCATIONS (SEE ORIGINAL PLAN SHEET NO. G-8-39 FOR LOCATIONS)
		STATE OF TENNESSEE ASBESTOS ACCREDITATION REQUIREMENTS (TCA 1200-01-20) MANDATE THAT ACM ABATEMENT WORK BE PERFORMED BY AN ACCREDITED FIRM (CONTRACTOR) USING ACCREDITED ABATEMENT WORKERS AND SUPERVISORS. THE CONTRACTOR SHALL BE RESPONSIBLE FOR SUBMTITING A NOTICE TO THE TDEC, DIVISION OF AIR POLLUTION CONTROL TEN (10) DAYS IN ADVANCE OF ANY ACM ABATEMENT OR DEMOLITION.	

JOHN C. PRICE
REGISTERED ENGINEER
AGRICULTURE
No. 17394
STATE OF TENNESSEE
4-28-14

STATE OF TENNESSEE
DEPARTMENT OF TRANSPORTATION

PROJECT COMMITMENTS

GENERAL NOTES

SPECIFICATIONS: STANDARD ROAD AND BRIDGE SPECIFICATIONS OF THE TENNESSEE DEPARTMENT OF TRANSPORTATION (MARCH 1, 2006 EDITION).

LOADING: HL-93 (DEAD LOADS TO INCLUDE 35 PSF FOR FUTURE OVERLAY).

DESIGN SPECIFICATIONS: AASHTO 2007 EDITION W/ ADDENDA.

CONCRETE: EXCEPT AS NOTED OTHERWISE, SHALL BE:
CLASS "A" (CAST-IN-PLACE) SHALL BE IN ACCORDANCE WITH THE STANDARD SPECIFICATIONS.
CLASS "D" CONCRETE FOR BRIDGE DECK SHALL BE IN ACCORDANCE WITH THE STANDARD SPECIFICATIONS.

HIGH EARLY STRENGTH CONCRETE (10 DAYS): THE MIX TO MEET THE REQUIREMENTS OF THE STANDARD SPECIFICATIONS, CLASS "A", EXCEPT THE CEMENT CONTENT SHALL BE A MINIMUM OF 714 LBS., THE WATER CEMENT RATIO SHALL BE A MAXIMUM OF 0.40, NO FLY ASH REPLACEMENT WILL BE PERMITTED, AND THE MINIMUM 28 DAY COMPRESSIVE STRENGTH SHALL BE 3,500 PSI. TRAFFIC SHALL NOT BE PERMITTED ON ANY OF THE REPAIR AREAS UNTIL TEST SPECIMENS ATTAIN A COMPRESSIVE STRENGTH OF 3,000 PSI MINIMUM AND THE CONCRETE HAS BEEN IN PLACE A MINIMUM OF TEN (10) DAYS.

BRIDGE RAIL SYSTEM: BUILD BRIDGE RAILING ACCORDING TO STANDARD DRAWING NO. STD-11-1. THE RAILING SHALL BE FORMED AND CAST PLUMB, NOT PERPENDICULAR TO THE SLAB. THE DIMENSIONS AT THE TRAFFIC FACE SHALL BE KEPT CONSTANT, WITH VARIATION DUE TO CROSS SLOPE ACCOMMODATED AT THE REAR FACE.

BRIDGE DECK SURFACE FINISH: TO BE IN ACCORDANCE WITH NOTE "C", SECTION 604.22 OF THE STANDARD SPECIFICATIONS. THE LIMITS OF THE GROOVING SHALL BE WITHIN ONE FOOT OF RAIL FACE FOR THE FULL LENGTH OF THE BRIDGE.

NOTE: THE CONTRACTOR SHALL PROVIDE 100% CONVENTIONAL FALL PROTECTION FOR WORKERS INSTALLING DECKING ABOVE 15 FEET.

CONCRETE CURING: ALL CONCRETE IN REPAIR AREA SHALL BE CURED ACCORDING TO THE STANDARD SPECIFICATIONS.

FORMS AND FALSEWORK: CONCRETE FORM WORK, FALSEWORK, AND TEMPORARY SUPPORTS SHALL BE REMOVED FROM THE JOB SITE AFTER WORK IS COMPLETED. COST OF FORMS, FALSEWORK, AND TEMPORARY SUPPORT REMOVAL SHALL BE INCLUDED IN ITEMS BID ON. THIS WORK SHALL BE COMPLETED BEFORE FINAL PAYMENT IS APPROVED.

REINFORCING STEEL: SHALL BE ASTM A615, GRADE 60 UNLESS NOTED OTHERWISE. SEE SECTIONS 604 AND 907 OF THE STANDARD SPECIFICATIONS.

GROUTED BARS IN DRILLED HOLES: HORIZONTALLY DRILLED HOLES SHALL BE DRILLED ½" IN DIAMETER LARGER THAN THE BAR, CLEANED PACKED WITH NON-SHRINK GROUT, AND THE BAR ROTATED (NOT DRIVEN) TO ITS SEAT. VERTICALLY DRILLED HOLES SHALL BE DRILLED ¼" IN DIAMETER LARGER THAN THE BAR, CLEANED, PACKED WITH EPOXY GROUT AND THE BAR SHALL BE DRIVEN TO ITS SEAT. ALL GROUTING MATERIAL SHALL BE APPROVED BY T.D.O.T. MATERIALS AND TESTS.

SPECIAL NOTE TO CONTRACTOR: CONTRACTOR SHALL USE EXTREME CARE AND TAKE ANY MEASURE NECESSARY TO INSURE THAT NO DEBRIS IS DROPPED INTO THE STREAM. THIS SHALL BE ACCOMPLISHED BY THE USE OF BASKETS, NETTING, WRAPPING, WORK PLATFORM, OR SIMILARLY EFFECTIVE MEANS. ANY DEBRIS WHICH IS ALLOWED TO DROP ON THE BANKS BELOW THE BRIDGE SHALL NOT BE ALLOWED TO ENTER THE STREAM AND SHALL BE REMOVED AND DISPOSED OF BY THE CONTRACTOR. COST OF REMOVING AND DISPOSING OF DEBRIS SHALL BE INCLUDED IN ITEMS BID.

ESTIMATED BRIDGE QUANTITIES

	ITEM NO.	DESCRIPTION	UNIT	TOTAL
3	202-01.02	REMOVAL OF ASBESTOS	L.S.	1
2	202-04.01	REMOVAL OF STRUCTURES (EXISTING BRIDGE)	L.S.	1
7	603-02.01	REPAINTING STEEL STRUCTURES (BR. NO. 72-SR378-1.58)	L.S.	1
10	603-05.20	CONTAINMENT & DISPOSAL OF WASTE (EXISTING PAINT)	L.S.	1
	604-02.03	EPOXY COATED REINFORCING STEEL	LBS.	22671
5	604-03.01	CLASS "A" CONCRETE (BRIDGES)	C.Y.	15
	604-03.02	STEEL BAR REINFORCEMENT (BRIDGES)	LBS.	2485
4	604-03.09	CLASS "D" CONCRETE (BRIDGE DECK)	C.Y.	109
	604-04.01	APPLIED TEXTURE FINISH (NEW STRUCTURES)	S.Y.	360
	604-04.02	APPLIED TEXTURE FINISH (EXISTING STRUCTURES)	S.Y.	422
	604-05.31	BRIDGE DECK GROOVING (MECHANICAL)	S.Y.	363
1	604-10.05	CONCRETE	S.F.	21
1 8	604-10.54	CONCRETE REPAIRS	S.F.	45
1	604-10.58	EPOXY INJECTION (INJECTION)	GAL.	1
1	604-10.62	EPOXY INJECTION REPAIR (COMPLETE AND IN PLACE)	L.F.	32
6	615-02.02	PRESTRESSED CONCRETE BOX BEAM (17"X36")	L.F.	402
9	617-02	BRIDGE DECK CRACK SEALING	L.F.	220
9	617-05	SEALANT (HMWM)	GAL.	3
11	620-05	CONCRETE PARAPET WITH STRUCTURAL TUBING	L.F.	220

FOOTNOTES:

1. ITEM SHALL BE BID AS A CONTIGENCY AND MAY BE INCREASED, DECREASED OR ELIMINATED AS DIRECTED BY THE ENGINEER.
2. INCLUDES COMPLETE REMOVAL OF CONCRETE GIRDER/CONCRETE DECK SUPERSTRUCTURE, ASPHALT OVERLAY APPROXIMATELY 7½" THICK AND BRIDGERAIL (APPROX. DECK AREA OF 34.5' X 106'). INCLUDES SUBSTRUCTURE SCARIFICATION AND CONCRETE REMOVAL. THE CONTRACTOR SHALL BE RESPONSIBLE FOR REMOVAL AND DISPOSAL OF ALL MATERIALS FROM THE SITE.
3. NOTE: EXISTING DRAINS CONTAIN ASBESTOS MATERIALS. SEE SPECIAL PROVISION SP202ACM & SPECIAL NOTE THIS SHEET.
4. INCLUDES COST OF ALL LABOR, MATERIALS AND EQUIPMENT REQUIRED TO PLACE NEW 8¼" CONCRETE SLAB, BEAM FILLETS, BACKWALLS, RISER BLOCKS AND SUBSTRUCTURE MODIFICATIONS.
5. COST OF MATERIALS AND LABOR NECESSARY FOR THE CONSTRUCTION AND MODIFCATION OF RISER BLOCKS AND MODIFICATION TO ABUTMENTS AND PIERS AS SHOWN ON DWGS. BR-116-74, AND BR-116-75 ARE INCLUDED IN THE UNIT PRICE BID FOR CLASS "A" CONCRETE (BRIDGES).
6. INCLUDES ALL COST NECESSARY FOR LABOR AND MATERIALS TO INSTALL PRESTRESSED CONCRETE BOX BEAMS AS WELL AS ELASTOMERIC PADS, AND RUBBER BONDING CEMENT.
7. INCLUDES ALL COST TO CLEAN AND TO PAINT EXISTING SUPPORT SYTEM CONSISTING OF L5X3X½ STEEL ATTACHED TO BENT CAPS (APPROXIMATE WEIGHT OF STEEL EQUALS 1690 LBS).
8. INCLUDES ALL COST TO REPAIR DESIGNATED DELAMINATED AREAS ON SUBSTRUCTURES WITH QUICK-SET PACTHING MATERIAL.
9. INCLUDES ALL COST TO INSTALL BRIDGE DECK CRACK SEALER (HMWM) AT TOE OF BRIDGERAIL. COST SHALL INCLUDE DECK SURFACE PREPARATION, CLEANING, LABOR, AND ALL MISC. MATERIALS REQ'D TO SEAL THE JOINTS ACCORDING TO SPECIAL PROVISION 604CR AND MANUFACTURERS SPECIFICATIONS.
10. THE COST OF ALL MATERIALS AND LABOR TO CONTAIN AND DISPOSE OF WASTE FROM THE PAINT SYSTEM ON EXISTING STEEL ANGLES.
11. COST OF 8 BRIDGE DECK DRAINS TO BE INCLUDED IN THE UNIT PRICE BID FOR THE PARAPET. SEE BR-116-66 FOR LOCATION AND INFORMATION FOR TYPE OF DRAINS TO CONSTRUCTED.

DESIGNED BY	JCP	DATE	DEC. 2013
DRAWN BY	MP	DATE	DEC. 2013
SUPERVISED BY	WAP	DATE	DEC. 2013
CHECKED BY	JCP	DATE	DEC. 2013

SPECIAL NOTE FOR UTILITIES: CARE SHALL BE TAKEN WHILE REMOVING AND REPLACING BRIDGE COMPONENTS SO AS NOT TO DISTURB OR DAMAGE ANY UTILITIES.

NOTE: THE CONTRACTOR SHALL FIELD VERIFY ALL DIMENSIONS AND QUANTITIES BEFORE ORDERING ANY MATERIALS.

BRIDGE DECK FORMS: BRIDGE DECK FORMS FOR CONCRETE DECKS SHALL BE CONSTRUCTED USING EITHER REMOVABLE FORMS OR PERMANENT FORMS. PERMANENT FORMS MAY BE EITHER REMAIN-IN-PLACE STEEL OR PRECAST, PRESTRESSED CONCRETE PANELS. IN EITHER CASE, FORMS SHALL BE ATTACHED BY MEANS OTHER THAN WELDING TO MAIN STRUCTURAL MEMBERS OR REINFORCING STEEL. TEMPORARY ERECTION DIAPHRAGMS MUST BE USED AT THE ENDS OF PRECAST CONCRETE GIRDERS WHERE END DIAPHRAGMS, SUPPORT DIAPHRAGMS, OR ABUTMENT BACKWALLS ARE TO BE POURED CONCURRENTLY WITH THE DECK AND SHALL BE PROVIDED ELSEWHERE IN ACCORDANCE WITH THE SPECIFICATIONS TO PREVENT GIRDER ROTATION. SEE STANDARD DRAWINGS STD-4-1 THRU STD-4-4, STD-14-3, AND SECTION 604.05 OF THE STANDARD SPECIFICATIONS.

SHOP DRAWINGS: SHALL BE SUBMITTED ACCORDING TO TDOT STANDARD SPECIFICATIONS SECTION 105. SHOP DRAWINGS SHALL BE SUBMITTED TO THE DIVISION OF STRUCTURES OFFICE, OFFICE OF BRIDGE INSPECTION AND REPAIR.

BRIDGE RAILING END POST: ENDPOSTS AS SHOWN ON STD-11-1 SHALL BE LOCATED ON THE BRIDGE SUPERSTRUCTURE AND MODIFIED TO BE INTEGRAL WITH SLAB AS SHOWN ON DWG. NO. BR-116-68.

THE HANGER ASSEMBLY SELECTED BY THE CONTRACTOR MUST BE APPROVED BY THE ENGINEER OF STRUCTURES BEFORE THE HANGER ASSEMBLY CAN BE INSTALLED AND THE PRE-STRESSED BEAM SHOP DRAWINGS APPROVED. IT IS SOLELY THE CONTRACTOR'S RESPONSIBILITY TO ENSURE THE OVERHANG FORMWORK, BRACKETS, AND CONNECTIONS ARE BOTH STRUCTURALLY AND FUNCTIONALLY ADEQUATE AND COMPLIANT WITH THE AASHTO BRIDGE CONSTRUCTION SPECIFICATION REQUIREMENTS.

BRIGDE RAILING END POST: ENDPOSTS AS SHOWN ON STD-11-1 SHALL BE LOCATED ON THE BRIDGE SUPERSTRUCTURE AND MODIFIED TO BE INTEGRAL WITH SLAB. BARS A570E PER STD-11-1 SHALL BE BENT OR CUT TO MAINTAIN REQUIRED CLEARANCES AND SPLICED WITH BARS B570E FOR THE SPACING SHOWN FOR THE END POST.

DEMOLITION: THE CONTRACTOR SHALL TAKE SPECIAL CARE TO PROTECT ANY PARTS OF THE STRUCTURE THAT ARE NOT TO BE REMOVED SPECIFICALLY. THE CONTRACTOR IS NOT ALLOWED TO USE A HYDRAULIC RAM MOUNTED ON A BACKHOE (COMMONLY CALLED A HOE RAM) OR OTHER SIMILARLY HEAVY EQUIPMENT FOR CONCRETE REMOVAL. PNEUMATIC HAMMERS MAY BE USED TO REMOVE UNSOUND CONCRETE. FOR FULL DEPTH OF CONCRETE SLAB REMOVAL EXCEPT OVER BEAMS, THE MAXIMUM HAMMER SIZE IS 90 POUND CLASS. FOR PARTIAL DEPTH OF CONCRETE SLAB REMOVAL AND ANY WORK OVER BEAMS, THE MAXIMUM HAMMER SIZE IS 60 POUND CLASS. SAWING OR CUTTING OF THE CONCRETE IS ACCEPTABLE SO LONG AS ANY SPECIFIED PROJECTION OF THE EXISTING REINFORCING STEEL IS MAINTAINED. ALL DEVICES PROPOSED FOR CONCRETE DEMOLITION SHALL MEET THE APPROVAL OF THE ENGINEER.

FINISHING CONCRETE SURFACES: CONCRETE FINISHING SHALL BE IN ACCORDANCE WITH SECTION 604.21 OF THE TENNESSEE STANDARD SPECIFICATIONS WITH THE CONTRACTOR HAVING THE OPTION OF USING EITHER A CLASS II FINISH OR A CLASS I FINISH FOLLOWED BY AN APPLIED TEXTURE FINISH. THE COST OF FINISHING CONCRETE SHALL BE INCLUDED IN THE UNIT PRICE BID FOR ITEM NO. 604-03.01, CLASS "A" CONCRETE, C.Y.

QUICK SET PATCHING MATERIALS: QUICK-SET PATCHING MATERIAL SHALL BE A POLYMER MODIFIED CEMENTIOUS PATCHING MATERIAL. SEE TDOT QUALIFIED PRODUCTS LIST 13, SECTION B.6 FOR ACCEPTABLE PATCHING MATERIALS.

CONTRACTOR SHALL PERFORM A HAND OR POWER TOOL CLEANING ON THE EXISTING STEEL ANGLES ATTACHED TO THE PIER CAPS IN ACCORDANCE WITH TENNESSEE STANDARD SPECIFICATION SUBSECTION 603.05 (A). THE SURFACE PREPARATION SHALL BE COMPLETED TO THE SATISFACTON OF THE ENGINEER. ALL EXPOSED STRUCTURAL STEEL SHALL BE PRIMED IMMEDIATELY AFTER CLEANING.

NOTE: PAINTING OF ALL STRUCTURAL STEEL SHALL BE INCLUDED IN ITEM NO. 603-20.01, REPAINTING STEEL STRUCTURES, L.S. COLOR OF THE FINISH COAT SHALL COMFORM WITH FEDERAL STANDARD 595B, FEDERAL SPECIFICATION NO. 15125, (BLUE).

SPECIAL NOTE FOR DEMOLITION

OUR EXISTING BRIDGE DRAWINGS OR INSPECTION REPORTS INDICATE THIS BRIDGE WAS ORIGINALLY CONSTRUCTED WITH TRANSITE (ASBESTOS AND CEMENT) DRAINS AND/OR PIPES. TO MINIMIZE THE AMOUNT OF HAZARDOUS MATERIAL WASTE, THE DRAINS AND/OR PIPE SHALL BE REMOVED PRIOR TO DEMOLITION OF THE STRUCTURE. THE CONTRACTOR IS REQUIRED TO TAKE ALL MANDATORY SAFEGUARDS PRESCRIBED BY STATE AND FEDERAL LAW FOR BOTH WORKER PROTECTION AND HAZARDOUS MATERIAL DISPOSAL.

SPECIAL ENVIRONMENTAL NOTE

IN ACCORDANCE WITH TDOT'S AGREEMENT WITH USFWS, CLIFF SWALLOW NESTS, EGGS, OR BIRIDS (YOUNG AND ADULTS) WILL NOT BE DISTURBED BETWEEN APRIL 15 AND JULY 31. FROM AUGUST 1 TO APRIL 14 NESTS CAN BE REMOVED OR DESTROYED, AND MEASURES IMPLEMENTED TO PREVENT FUTURE NEST BUILDING AT THE SITE (E.G., CLOSING OFF AREA USING NETTING).

PROJECT NO.	YEAR	SHEET NO.
72003-4201-04	2014	2

REVISIONS

NO.	DATE	BY	BRIEF DESCRIPTION
1	5/20/14		ADDED NOTES

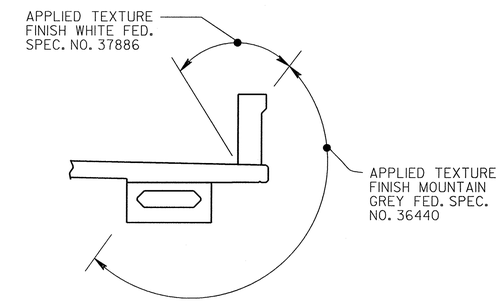

APPLIED TEXTURE FINISH SKETCHES

IN ADDITION TO THE SURFACES SHOWN IN THE APPLIED TEXTURE FINISH SKETCH, ALL EXPOSED SURFACES OF THE PIERS, WINGWALLS, ABUTMENT BEAMS AND EXTERIOR PORTIONS OF THE ENDWALL SHALL RECEIVE AN APPLIED TEXTURE FINISH.

COST OF CLEANING, FURNISHING AND APPLYING TEXTURE COATING INCLUDING LABOR AND NECESSARY MATERIALS SHALL BE INCLUDED IN ITEM NO. 604-04.01 AND 604-04.02, APPLIED TEXTURE FINISH (NEW STRUCTURES), S.Y. AND APPLIED TEXTURE FINISH (EXISTING STRUCTURES), S.Y.

THE CONTRACTOR SHALL USE CONTAINMENT SCREENS OR OTHER MEASURES AS NECESSARY TO PREVENT ANY TEXTURE COATING FROM ENTERING THE ENVIRONMENT. CONTAINMENT MEASURES SHALL BE APPROVED BY THE ENGINEER AND COST INCLUDED IN BID ITEMS.

THE EXISTING SURFACES THAT ARE TO RECEIVE A TEXTURE FINISH SHALL BE FREE OF ALL FLAKING TEXTURE COATING, RUST , DIRT, OIL, AND OTHER FOREIGN SUBSTANCES PRIOR TO THE APPLICATION OF THE TEXTURE FINISH. THE SURFACE SHALL BE CLEANED TO THE COMPLETE SATISFACTION OF THE ENGINEER. COST TO BE INCLUDED IN BID ITEMS. THE WASH WATER IS TO BE FILTERED AND PAINT CHIPS AND DEBRIS COLLECTED PRIOR TO RELEASE OF THE WATER.

A LIST OF APPROVED TEXTURE COATINGS MAY BE OBTAINED FROM THE TDOT DIVISION OF MATERIALS AND TESTS.

NO TEXTURE FINISH SHALL BE APPLIED PRIOR TO COMPLETION OF PAVING AND HAULING OPERATIONS AT BRIDGE SITE.

UNOFFICIAL SET

NOT FOR BIDDING

JOHN C. PRICE
REGISTERED ENGINEER
No. 17394
STATE OF TENNESSEE
5-22-14

STATE OF TENNESSEE
DEPARTMENT OF TRANSPORTATION
BUREAU OF HIGHWAYS

BRIDGE GENERAL NOTES
AND ESTIMATED QUANTITIES
STATE ROUTE 378
OVER
LITTLE RICHLAND CREEK
BRIDGE NO. 72-SR378-1.58
RHEA COUNTY
2014

BR-116-67

TENNESSEE D.O.T.
DESIGN DIVISION
FILE NO.

TYPE	YEAR	PROJECT NO.	SHEET NO.
CONST.	2014	72003-4201-04	2A

ESTIMATED ROADWAY QUANTITIES

	ITEM NO.	DESCRIPTION	UNIT	QUANTITY
(2)	209-05	SEDIMENT REMOVAL	C.Y	9
(1)	209-08.02	TEMPORARY SILT FENCE (WITH BACKING)	LF	240
	209-09.04	SEDIMENT FILTER BAG (15'X10')	EA.	1
	303-01	MINERAL AGGREGATE, TYPE A BASE, GRADING D	T.ON	23
(2)	303-10.01	MINERAL AGGREGATE (SIZE 57)	T.ON	14
	307-01.08	ASPHALT CONCRETE MIX (PG64-22) (BPMB-HM) GRADING B-M2	T.ON	10
	402-01	BITUMINOUS MATERIAL FOR PRIME COAT (PC)	T.ON	1
	402-02	AGGREGATE FOR COVER MATERIAL (PC)	T.ON	1
	403-01	BITUMINOUS MATERIAL FOR TACK COAT (TC)	T.ON	1
	411-01.10	ASPHALT CONCRETE MIX (PG64-22) GRADING D	T.ON	24
	415-01.02	COLD PLANING OF BITUMINOUS PAVEMENT	S.Y	356
	705-01.01	GUARDRAIL AT END OF BRIDGE	LF	108
	705-02.02	SINGLE GUARDRAIL (TYPE 2)	LF	50
	705-04.04	GUARDRAIL TERMINAL (TYPE 21)	EA	4
	712-01	TRAFFIC CONTROL	LS	1
	712-04.01	FLEXIBLE DRUMS (CHANNELIZING)	EA.	4
	712-05.01	WARNING LIGHTS (TYPE A)	EA.	6
	712-06	SIGNS (CONSTRUCTION)	SF	200
	712-07.03	TEMPORARY BARRICADES (TYPE III)	LF	48
	713-16.01	CHANGEABLE MESSAGE SIGN UNIT	EA.	1
	716-13.06	SPRAY THERMO PAVEMENT MARKING (40 MIL) (4 IN LINE)	LM	.1
	717-01	MOBILIZATION	LS	1
(2)	740-10.03	GEOTEXTILE (TYPE III) (EROSION CONTROL)	S.Y.	40

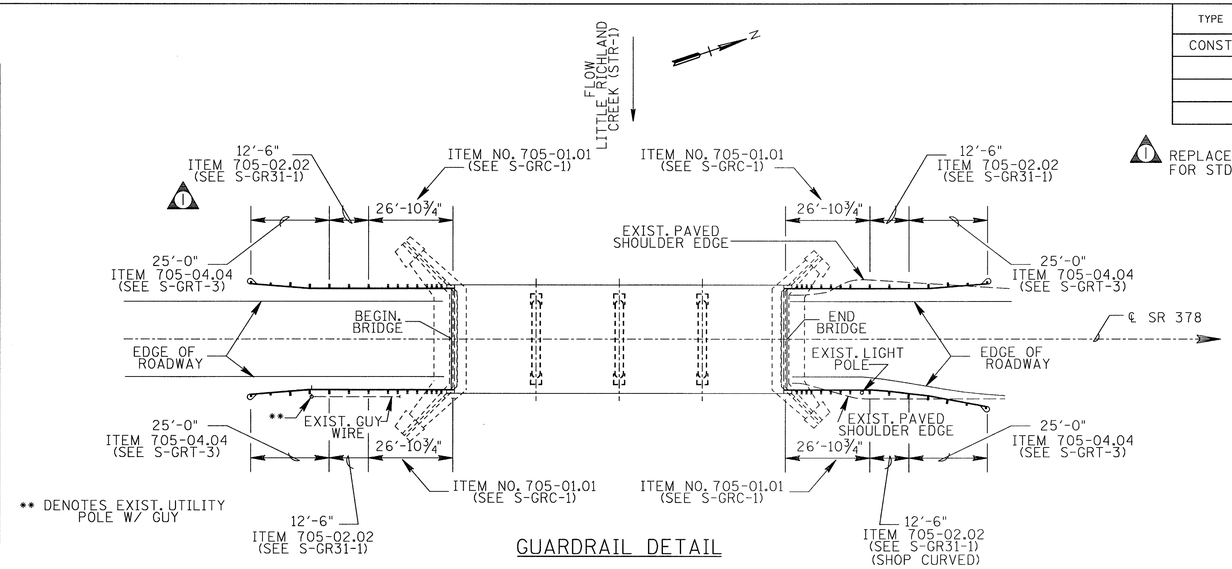

** DENOTES EXIST. UTILITY POLE W/ GUY

GUARDRAIL DETAIL

(1) REPLACED DESCRIPTION FOR STD. DWGS. 05/20/14

FOOTNOTES

(1) INCLUDES THE COST OF ALL LABOR AND MATERAILS FOR FURNISHING AND INSTALLING THE TEMPORARY FILTER BARRIER WHERE LOCATED BY THE ENGINEER AND REMOVAL UPON PROJECT COMPLETION. SEE STD. DWG. EC-STR-3C. THE ENGINEER MAY INCREASE OR DECREASE OR ELIMINATE THE QUANTITY FOR THIS ITEM.

(2) ITEM MAY BE INCREASED OR DECREASED AS DIRECTED BY THE ENGINEER.

MISCELLANEOUS NOTES

1. NOTHING IN THE GENERAL NOTES OR SPECIAL PROVISIONS SHALL RELIEVE THE CONTRACTOR FROM HIS RESPONSIBILITIES TOWARD THE SAFETY AND CONVENIENCE OF THE GENERAL PUBLIC AND THE RESIDENTS ALONG THE PROPOSED CONSTRUCTION AREA.
2. THE CONTRACTOR SHALL BE RESPONSIBLE FOR ANY DAMAGE OR LOSS OF EXISTING SIGNS DURING CONSTRUCTION. EXISTING SIGNS SHALL BE REMOVED AND REPLACED AS NECESSARY.

GRADING NOTE

1. ANY AREA THAT IS DISTURBED OUTSIDE LIMITS OF CONSTRUCTION DURING THE LIFE OF THIS PROJECT SHALL BE REPAIRED BY THE CONTRACTOR AT HIS EXPENSE.

SPECIAL NOTES

1. TRAFFIC CONTROL DETOUR PLAN - SEE SHEET 2C
2. THE CONTRACTOR SHALL NOT REMOVE, REWORK SHOULDERS OR FLATTEN SLOPES UNTIL THE APPROPRIATE WARNING DEVICES ARE INSTALLED.

GUARDRAIL NOTES

1. THE PROPOSED GUARDRAIL, INCLUDING ANY ANCHOR SYSTEM, SHALL BE INSTALLED QUICKLY TO MINIMIZE TRAFFIC EXPOSURE TO ANY HAZARD. NO PAYMENT WILL BE MADE FOR A SECTION OF PROPOSED GUARDRAIL, INCLUDING ANCHORS, UNTIL IT IS COMPLETE IN PLACE.
2. IF ANY APPROACH END OF A SECTION OF GUARDRAIL OR BRIDGE RAIL MUST TEMPORARILY BE LEFT INCOMPLETE BARRICADES OR DRUMS WITH TYPE A LIGHTS AND ROUNDED END ELEMENTS AS MINIMUM MEASURES TO PROTECT TRAFFIC FROM THE HAZARD OF AN EXPOSED END. ALL COST OF FURNISHING AND INSTALLING A TEMPORARY ROUNDED END ELEMENT SHALL BE INCLUDED IN THE COST OF THE PROPOSED GUARDRAIL.
3. THE CONTRACTOR SHALL BE RESPONSIBLE FOR ANY DAMAGE TO PORTIONS OF EXISTING GUARDRAIL AND POSTS WHICH ARE INDICATED AS TO REMAIN IN PLACE.

UTILITY NOTES

1. THE LOCATIONS OF UTILITIES SHOWN WITHIN THESE PLANS ARE APPROXIMATE ONLY. EXACT LOCATIONS SHALL BE DETERMINED IN THE FIELD BY CONTACTING THE UTILITY COMPANIES INVOLVED. NOTIFICATION BY CALLING THE TENNESSEE ONE CALL SYSTEM, INC., AT 1-800-351-1111 AS REQUIRED BY TCA 65-31-106 WILL BE REQUIRED.
2. UNLESS OTHERWISE NOTED, ALL UTILITY ADJUSTMENTS WILL BE PERFORMED BY THE UTILITY OR IT'S REPRESENTATIVE. THE CONTRACTOR AND UTILITY OWNERS WILL BE REQUIRED TO COOPERATE WITH EACH OTHER IN ORDER TO EXPEDITE THE WORK REQUIRED BY THIS CONTRACT. ON CONTRACTS WHERE CONSTRUCTION STAKES, LINES, AND GRADES ARE CONTRACT ITEMS, THE CONTRACTOR WILL BE REQUIRED TO PROVIDE RIGHT-OF-WAY OR SLOPE STAKES, DITCH OR STREAM BED GRADES, OR OTHER ESSENTIAL SURVEY STAKING TO PREVENT CONFLICTS WITH THE HIGHWAY CONSTRUCTION. FREQUENTLY, THIS WILL BE REQUIRED AS THE FIRST ITEM OF WORK AND AT ANY LOCATION ON THE PROJECT DIRECTED BY THE ENGINEER.
3. THE CONTRACTOR WILL PROVIDE ALL NECESSARY PROTECTIVE MEASURES TO SAFEGUARD EXISITING UTILITIES FROM DAMAGE DURING CONSTRUCTION OF THIS PROJECT. IN THE EVENT THAT SPECIAL EQUIPMENT IS REQUIRED TO WORK OVER AND AROUND THE UTILITIES, THE CONTRACTOR WILL BE REQUIRED TO FURNISH SUCH EQUIPMENT. THE COST OF PROTECTING UTILITIES FROM DAMAGE AND FURNISHING SPECIAL EQUIPMENT WILL BE INCLUDED IN THE BID PRICE FOR OTHER ITEMS OF CONSTRUCTION.
4. PRIOR TO SUBMITTING HIS BID, THE CONTRACTOR WILL BE SOLELY RESPONSIBLE FOR CONTACTING OWNERS OF ALL AFFECTED UTILITIES IN ORDER TO DETERMINE THE EXTENT TO WHICH RELOCATIONS AND/OR ADJUSTMENTS WILL HAVE UPON THE SCHEDULE OF WORK FOR THE PROJECT. WHILE SOME WORK MAY BE REQUIRED "AROUND" UTILITY FACILITIES THAT WILL REMAIN IN PLACE. OTHER UTILITY FACILITIES MAY NEED TO BE ADJUSTED CONCURRENTLY WITH THE CONTRACTOR'S OPERATIONS. ADVANCE CLEAR CUTTING MAY BE REQUIRED BY THE ENGINEER AT ANY LOCATION WHERE CLEARING IS CALLED FOR IN THE SPECIFICATIONS AND CLEAR CUTTING IS NECESSARY FOR A UTILITY RELOCATION. ANY ADDITIONAL COST WILL BE INCLUDED IN THE UNIT PRICE BID FOR THE CLEARING ITEM SPECIFIED IN THE PLANS.
5. THE CONTRACTOR SHALL NOTIFY EACH INDIVIDUAL UTILITY OWNER OF HIS PLAN OF OPERATION IN THE AREA OF THE UTILITIIES. PRIOR TO COMMENCING WORK, THE CONTRACTOR SHALL CONTACT THE UTILITY OWNERS AND REQUEST THEM TO PROPERLY LOCATE THEIR RESPECTIVE UTILITY ON THE GROUND. THIS NOTIFICATION SHALL BE GIVEN AT LEAST THREE (3) BUSINESS DAYS PRIOR TO COMMENCEMENT OF OPERATIONS AROUND THE UTILITY IN ACCORDANCE WITH TCA 65-31-106.

CONSTRUCTION WORK ZONE & TRAFFIC CONTROL NOTES

1. ADVANCED WARNING SIGNS SHALL NOT BE DISPLAYED MORE THAN FORTY-EIGHT (48) HOURS BEFORE PHYSICAL CONSTRUCTION BEGINS. SIGNS MAY BE ERECTED UP TO ONE WEEK BEFORE NEEDED, IF THE SIGN FACE IS FULLY COVERED.
2. IF THE CONTRACTOR MOVES OFF THE PROJECT, HE SHALL COVER OR REMOVE ALL UNNEEDED SIGNS AS DIRECTED BY THE ENGINEER. COSTS OF REMOVAL, COVERING, AND REINSTALLING SIGNS SHALL NOT BE MEASURED AND PAID FOR SEPARATELY, BUT ALL COSTS SHALL BE INCLUDED IN THE ORIGINAL UNIT PRICE BID FOR ITEM NO. 712-06 SIGNS (CONSTRUCTION) PER SQUARE FOOT.
3. A LONG TERM BUT SPORADIC USE WARNING SIGN, SUCH AS FLAGGER SIGN, MAY REMAIN IN PLACE WHEN NOT REQUIRED PROVIDED THE SIGN FACE IS FULLY COVERED.
4. TRAFFIC CONTROL DEVICES SHALL NOT BE DISPLAYED OR ERECTED UNLESS RELATED CONDITIONS ARE PRESENT NECESSITATING WARNING.
5. USE OF BARRICADES, PORTABLE BARRIER RAILS, VERTICAL PANELS, AND DRUMS SHALL BE LIMITED TO THE IMMEDIATE AREAS OF CONSTRUCTION WHERE A HAZARD IS PRESENT. THESE DEVICES SHAL NOT BE STORED ALONG THE ROADWAY WITHIN THIRTY (30) FEET OF THE EDGE OF THE TRAVELED WAY BEFORE OR AFTER USE UNLESS PROTECTED BY GUARDRAIL, BRIDGE RAIL, AND/OR BARRIERS INSTALLED FOR OTHER PURPOSES FOR ROADWAYS WITH CURRENT ADT'S LESS THAN 1500 AND DESIGN SPEED OF LESS THAN 60 MPH. THIS DISTANCE SHALL INCREASE TO FORTY-FIVE (45) FEET FOR ROADWAYS WITH CURRENT ADT'S OF 1500 OR GREATER AND DESIGN SPEED OF 60 MPH OR GREATER OR ON THE OUTSIDE OF A HORIZONTAL CURVE. THESE DEVICES SHALL BE REMOVED FROM THE CONSTRUCTION WORK ZONE WHEN THE ENGINEER DETERMINES THEY ARE NO LONGER NEEDED. WHERE THERE IS INSUFFICIENT RIGHT-OF-WAY TO PROVIDE FOR THIS REQUIRED SETBACK, THE CONTRACTOR SHALL DETERMINE THE ALTERNATE LOCATIONS AND REQUEST THE ENGINEER'S APPROVAL TO USE THEM.
6. THE CONTRACTOR SHALL NOT BE PERMITTED TO PARK ANY VEHICLES OR CONSTRUCTION EQUIPMENT DURING PERIODS OF INACTIVITY, WITHIN THIRTY (30) FEET OF THE EDGE OF PAVEMENT WHEN THE LANE IS OPEN TO TRAFFIC UNLESS PROTECTED BY GUARDRAIL, BRIDGE RAIL, AND/OR BARRIERS INSTALLED FOR OTHER PURPOSES FOR ROADWAYS WITH CURRENT ADT'S LESS THAN 1500 AND DESIGN SPEED OF LESS THAN 60 MPH. THIS DISTANCE SHALL BE INCREASED TO FORT-FIVE (45) FEET FOR ROADWAYS WITH CURRENT ADT'S OF 1500 OR GREATER AND DESIGN SPEED OF 60 MPH OR GREATER OR ON THE OUTSIDE OF A HORIZONTAL CURVE. PRIVATELY OWNED VEHICLES SHALL NOT BE ALLOWED TO PARK WITHIN THIRTY (30) FEET OF A OPEN TRAFFIC LANE AT ANY TIME UNLESS PROTECTED AS DESCRIBED ABOVE FOR ROADWAYS WITH CURRENT ADT'S LESS THAN 1500 AND DESIGN SPEED OF LESS THAN 60 MPH. THIS DISTANCE SHALL BE INCREASED TO FORTY-FIVE (45) FEET FOR ROADWAYS WITH CURRENT ADT'S OF 1500 OR GREATER AND DESIGN SPEED OF 60 MPH OR GREATER OR ON THE OUTSIDE OF A HORIZONTAL CURVE. WHERE THERE IS INSUFFICIENT RIGHT-OF-WAY TO PROVIDE FOR THIS REQUIRED SETBACK, THE CONTRACTOR SHAL DETERMINE THE ALTERNATE LOCATIONS AND REQUEST THE ENGINEER'S APPROVAL TO USE THEM.
7. ALL DETOUR AND CONSTRUCTION SIGNING SHALL BE IN STRICT ACCORDANCE WITH [illegible] RM TRAFFIC CONTROL DEVICES.

UNOFFICIAL SET

NOT FOR BIDDING

JOHN C. PRICE
REGISTERED ENGINEER
AGRICULTURE COMMERCE
NO. 17394
STATE OF TENNESSEE
5-22-14

STATE OF TENNESSEE
DEPARTMENT OF TRANSPORTATION

ESTIMATED ROADWAY QUANTITIES AND GENERAL NOTES

BR. NO. 72-SR378-01.58

TENNESSEE D.O.T.	
DESIGN DIVISION	
FILE NO.	

TYPE	YEAR	PROJECT NO.	SHEET NO.
CONST.	2014	72003-4201-04	2B

1 ADDED EPSC NOTES 05/20/14

SFB DENOTES SILT FENCE WITH BACKING

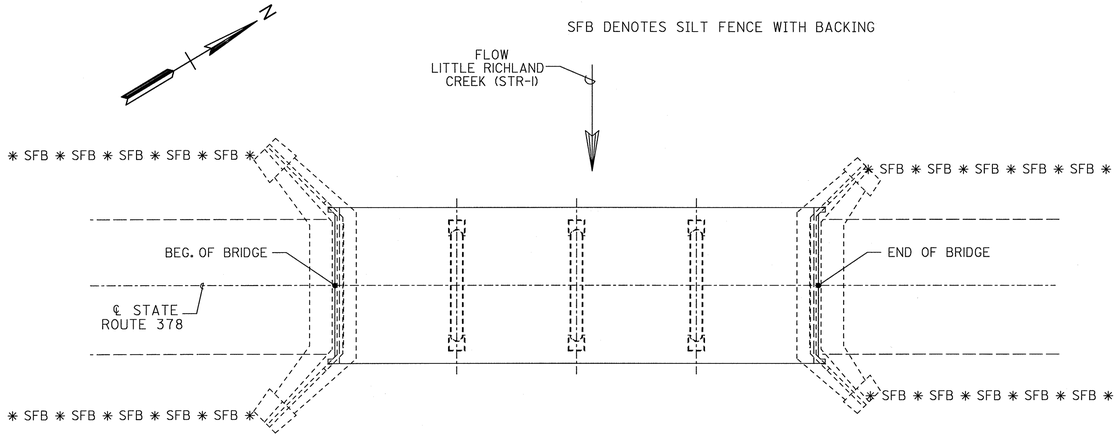

PLAN

SHOWING SILT FENCE LOCATION

PAVING RESURFACING NOTES

1. THE CONTRACTOR SHALL BE REQUIRED TO COLD PLANE AND PAVE IN THE DIRECTION OF TRAFFIC.
2. IN ALL CASES FOR THE LENGTH OF THE PAVEMENT TRANSITION THE THICKNESS AND WIDTH OF THE RESURFACING AND ANY ADDTIONAL PAVEMENT MATERIALS SHALL BE AS DIRECTED BY THE TDOT ENGINEER.

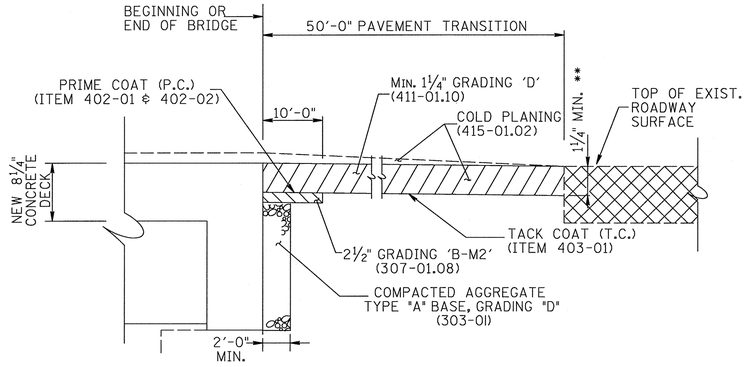

PAVEMENT TRANSITION DETAIL

NOTES:

PAVEMENT AT EACH END OF BRIDGE TO BE REPAIRED AFTER COMPLETION OF BRIDGE REPAIRS TO PROVIDE A SMOOTH RIDING SURFACE FROM EXISTING ASPHALT TO NEW CONCRETE DECK.

** DENOTES: 1" VERTICAL SAWCUT TO ENSURE SMOOTH EDGE AT END OF ASPHALT TRANSITION. SAWCUT TO BE INCLUDED IN BID ITEMS.

SEE SECTION 617 AND 906.04 OF THE TENNESSEE STANDARD SPECIFICATIONS FOR ROAD AND BRIDGE CONSTRUCTION.

REMOVAL OF EXISTING ASPHALT FROM THE BRIDGE FOR FULL WIDTH AND LENGTH TO BE PAID UNDER ITEM NO. 202-04.01.

REMOVAL OF 50' EXISTING ASPHALT TRANSITION FOR FULL WIDTH OF APPROACHES TO BE PAID FOR UNDER ITEM NO. 415-01.02.

ASPHALT TO BE SLOPED OR FEATHERED AS NECESSARY TO OBTAIN DESIRED SURFACE SLOPE.

PAVEMENT MARKING NOTES

1. PERMANENT PAVEMENT LINE MARKING SHALL BE 4" SPRAY THERMOPLASTIC (40 MIL) INSTALLED TO PERMANENT STANDARDS AT THE END OF EACH DAY'S WORK. SHORT UNMARKED SECTIONS SHALL NOT BE ALLOWED. PAVEMENT MARKINGS WILL BE MEASURED AND PAID FOR UNDER ITEM NO. 716-13.06 , SPRAY THERMO PVMT MRKNG (40 MIL) (4 IN LINE), L.M.

1 EROSION PREVENTION AND SEDIMENT CONTROL NOTES

1. CONTRACTOR SHALL USE EXTREME CARE AND TAKE ANY MEASURE NECESSARY TO INSURE THAT NO DEBRIS IS DROPPED INTO THE STREAM. THIS SHALL BE ACCOMPLISHED BY THE USE OF BASKETS, NETTING, WRAPPING, WORK PLATFORM, OR OTHER SIMILARLY EFFECTIVE MEANS. ANY DEBRIS WHICH IS ALLOWED TO DROP ON THE BANKS BELOW THE BRIDGE SHALL NOT BE ALLOWED TO ENTER THE STREAM AND SHALL BE REMOVED AND DISPOSED OF BY THE CONTRACTOR. COST OF REMOVING AND DISPOSING OF DEBRIS SHALL BE INCLUDED IN ITEMS BID ON.
2. ANY WORK WITHIN THE STREAM CHANNEL AREA (E.G. FOR PIER FOOTING, RIP-RAP PLACEMENT, MULTI-BARREL CULVERT/BRIDGE CONSTRUCTION, ETC.) SHALL BE SEPARATED FROM FLOWING WATER OR EXPECTED FLOW PATH AND PERFORMED DURING LOW FLOW CONDITIONS. ALL ITEMS USED WITHIN THE STREAM CHANNEL AREA FOR DIVERSION OF FLOW (OR EXPECTED FLOW), UNLESS SPECIFIED IN PLANS, SHALL NOT BE PAID FOR DIRECTLY BUT SHALL BE INCLUDED IN THE COST OF OTHER ITEMS. THIS NOTE EXCLUDES ANY ITEMS SPECIFIED IN THE PLANS FOR THE TEMPORARY DIVERSION CHANNELS, EC-STR-31 AND TEMPORARY DIVERSION CULVERTS, EC-STR-32 FOR SINGLE BARREL CULVERT CONSTRUCTION.
3. INSPECTION, REPAIR, AND MAINTENANCE OF EPSC MEASURES/STRUCTURES IS TO BE PERFORMED ON A REGULAR BASIS. SEDIMENT SHALL BE REMOVED FROM SEDIMENT CONTROL STRUCTURES WHEN THE DESIGN CAPACITY HAS BEEN REDUCED BY FIFTY PERCENT (50%). DURING SEDIMENT REMOVAL, THE CONTRACTOR SHALL TAKE CARE TO ENSURE THAT STRUCTURAL COMPONENTS OF EPSC MEASURES ARE NOT DAMAGED AND THUS MADE INEFFECTIVE. IF DAMAGE DOES OCCUR, THE CONTRACTOR SHALL REPAIR THE STRUCTURES AT THE CONTRACTOR'S OWN EXPENSE.
4. SEDIMENT REMOVED FROM SEDIMENT CONTROL STRUCTURES SHALL BE PLACED AND BE TREATED IN A MANNER SO THAT THE SEDIMENT IS CONTAINED WITHIN THE PROJECT LIMITS AND DOES NOT MIGRATE INTO WATERS OF THE STATE/U.S. COST FOR THIS TREATMENT IS TO BE INCLUDED IN PRICE BID FOR ITEM NO. 209-05 SEDIMENT REMOVAL, C.Y.
5. THE CONTRATOR SHALL INSTALL A RAIN GAUGE EVERY LINEAR MILE AT ALL SITES WHERE CLEARING, GRUBBING, EXCAVATION, GRADING, CUTTING OR FILLING IS BEING ACTIVELY PERFORMED, OR EXPOSED SOIL HAS NOT YET BEEN PERMANENTLY STABILIZED. IF THE PROJECT LENGTH IS LESS THAN ONE LINEAR MILE, ONE RAIN GAUGE SHALL BE INSTALLED AT THE CENTER OF THE PROJECT OR AS INDICATED BY THE TDOT EPSC INSPECTOR. THE CONTRACTOR SHALL ENSURE THAT EACH GAUGE IS MAINTAINED IN GOOD WORKING CONDITION. TDOT AND/OR THE CONTRACTOR SHALL RECORD DAILY PRECIPITATION AND FORECASTED PERCENTAGE OF PRECIPITATION IN DETAILED RECORDS OF RAINFALL EVENTS INCLUDING DATES, AMOUNTS OR RAINFALL PER GAUGE, THE ESTIMATED DURATION (OR STARTING AND ENDING TIMES), AND FORECASTED PERCENTAGE OF PRECIPITATION FOR THE PROJECT. THIS INFORMATION SHALL BE PROVIDED TO THE ENGINEER ON A MONTHLY BASIS. THE COST FOR THE RAIN GAUGES IS TO BE INCLUDED IN THE UNIT BID PRICES FOR OTHER ITEMS. RAIN GAUGES SHALL BE AS SPECIFIED IN THE APPROVED TDOT RAINFALL MONITORING PLAN.
6. INSPECTION OF EPSC MEASURES SHALL BE DONE AT LEAST TWICE PER CALENDAR WEEK AT LEAST 72 HOURS APART. A CALENDAR WEEK IS DEFINED AS SUNDAY THROUGH SATURDAY.
7. OUTFALL POINTS SHALL BE INSPECTED TO ASCERTAIN WHETHER EPSC MEASURES ARE EFFECTIVE IN PREVENTING SIGNIFICANT IMPACTS TO SURROUDING WATERS. WHERE DISCHARGE LOCACTIONS ARE INACCESSIBLE, NEARBY DOWNSTREAM LOCATIONS SHALL BE INSPECTED. LOCATIONS WHERE VEHICLES ENTER AND EXIT THE SITE SHALL BE INSPECTED FOR EVIDENCE OF OFF-SITE ROADWAY SEDIMENT TRACKING.
8. UPON CONCLUSION OF THE INSPECTIONS, EPSC MEASURES FOUND TO BE INEFFECTIVE SHALL BE REPAIRED, REPLACED OR MODIFIED BEFORE THE NEXT RAIN EVENT, IF POSSIBLE, BUT IN NO CASE MORE THAN 24 HOURS AFTER THE INSPECTION OR WHEN THE CONDITION IS IDENTIFIED. IF THE REPAIR, REPLACEMENT OR MODIFICAITON IS NOT PRACTICAL WITHIN THE TIMEFRAME, WRITTEN DOCUMENTATION MUST BE PROVIDED IN THE FIELD BOOK AND AN ESTIMATED REPAIR, REPLACEMENT OR MODIFICATION SCHEDULE SHALL BE DOCUMENTED WITHIN 24 HOURS AFTER IDENTIFICATION.
9. THE CONTRACTOR SHALL ESTABLISH AND MAINTAIN A PROACTIVE METHOD TO PREVENT LITTER, CONSTRUCTION DEBRIS, AND CONSTRUCTION WASTES FROM ENTERING WATERS OF THE STATE/U.S.
10. THE CONTRACTOR SHALL TAKE APPROPRIATE STEPS TO ENSURE THAT PETROLEUM PRODUCTS OR OTHER CHEMICAL POLLUTANTS ARE PREVENTED FROM ENTERING WATERS OF THE STATE/U.S. ALL EQUIPMENT REFUELING, SERVICING, AND STAGING AREAS SHALL COMPLY WITH AL LOCAL, STATE, AND FEDERAL LAWS, RULES, REGULATIONS, AND ORDINANCES, INCLUDING THOSE OF THE NATIONAL FIRE PROTECITON ASSOCIATION (NFPA). APPROPRIATE CONTAINMENT MEASURES FOR THESE AREAS SHALL BE USED. ALL SPILLS MUST BE REPORTED TO THE APPROPRIATE AGENCY, AND MEASURES SHALL BE TAKEN IMMEDIATELY TO PREVENT THE POLLUTION OF WATERS OF THE STATE/U.S., INCLUDING GROUNDWATER, SHOULD A SPILL OCCUR.
11. THE CONTRACTOR SHALL USE ANY MEARSURE NECESSARY TO ENSURE THAT CONSTRUCTION AND CONSTRUCTION EQUIPMENT WILL NOT ENTER ANY PORTION OF THE CREEK UNLESS SPECIFICALLY ADDRESSED IN THE PLANS.

UNOFFICIAL SET

NOT FOR BIDDING

JOHN C. PRICE
REGISTERED ENGINEER
AGRICULTURE
CHEMICAL
No. 17394
STATE OF TENNESSEE
5-22-14

STATE OF TENNESSEE
DEPARTMENT OF TRANSPORTATION

EROSION CONTROL PLAN AND PAVEMENT DETAILS

BR. NO. 72-SR378-01.58

TENNESSEE D.O.T.
DESIGN DIVISION
FILE NO.

TYPE	YEAR	PROJECT NO.	SHEET NO.
CONST.	2014	72003-4201-04	2C

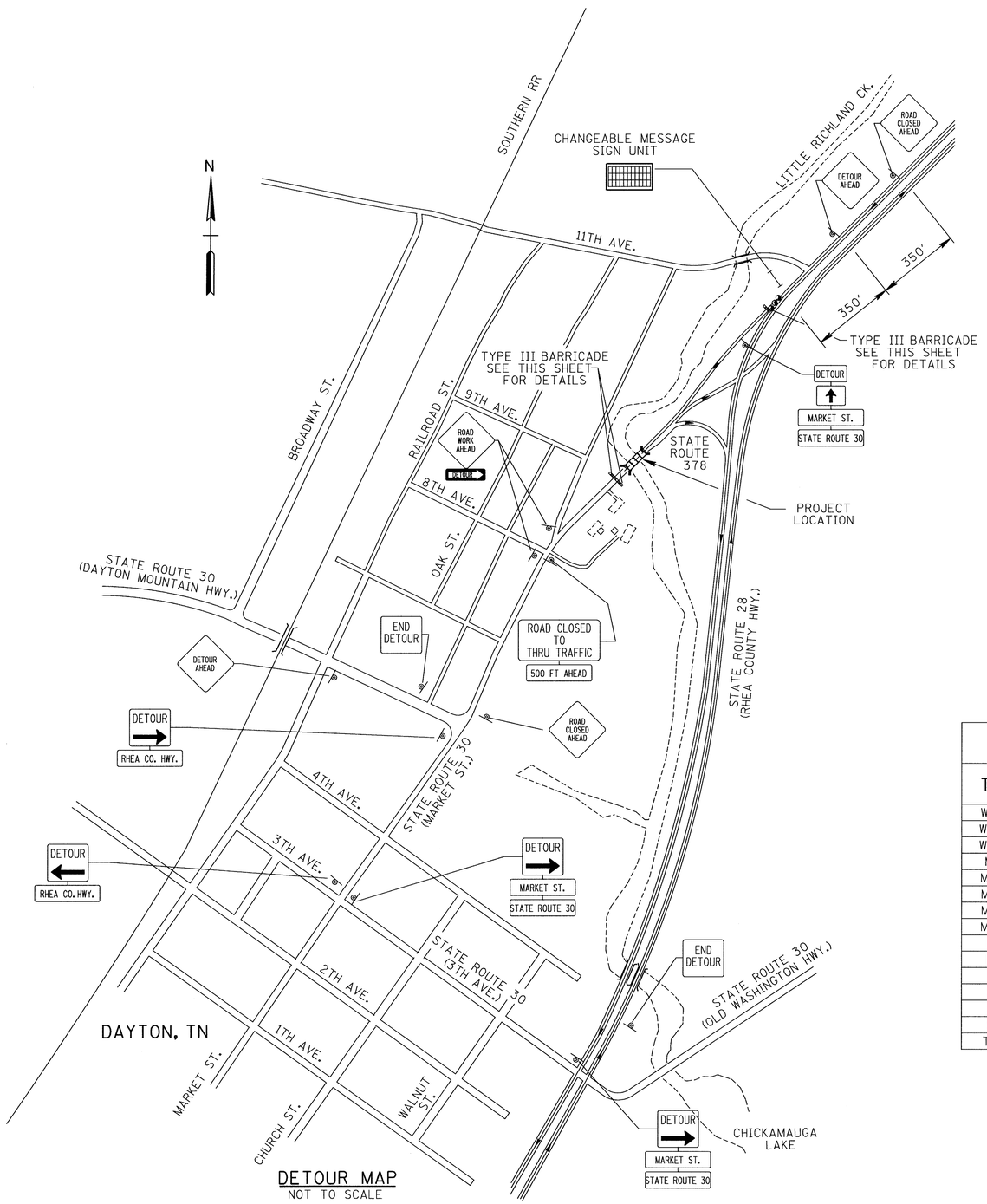

DETOUR MAP
NOT TO SCALE

TRAFFIC CONTROL NOTES

ADVANCE WARNING SIGNS TO BE PLACED PRIOR TO CONSTRUCTION AND REMAIN IN PLACE UNTIL THE COMPLETION OF THIS PROJECT.

THE TRAFFIC CONTROL PLAN DOES NOT RELIEVE THE CONTRACTOR OF THE RESPONSIBILITY OF INSTALLING TRAFFIC CONTROL DEVICES IN ACCORDANCE WITH THE CURRENT EDITION OF THE "MANUAL ON UNIFORM TRAFFIC CONTROL DEVICES".

TYPE "A" WARNING LIGHTS SHALL BE PLACED ON DESIGNATED ADVANCED WARNING SIGNS AS SHOWN.

IF ADDITIONAL SIGNS ARE DEEMED NECESSARY BY THE ENGINEER, THEY SHALL BE FURNISHED AND INSTALLED AT THE UNIT PRICE BID, ITEM NO. 712-06, SIGNS (CONSTRUCTION), S.F.

DETOUR NOTES

1. ACCESS TO ALL TRACTS ALONG DETOUR ROUTE SHALL BE MAINTAINED AT ALL TIMES.
2. SEE SPECIAL PROVISION 108B FOR FURTHER GUIDANCE REGARDING DETOURS AND CLOSURES
3. STATE ROUTE 378 (MARKET ST.) SHALL BE CLOSED AS SHOWN FOR ENTIRE LENGTH OF PROJECT.
4. THE CONTRACTOR IS TO COORDINATE WITH LOCAL UTILITIES TO ENSURE NO CONFLICTS WITH THE EXISTING UTILITIES DUE TO THE ERECTION OF THE TEMPORARY SIGNS.

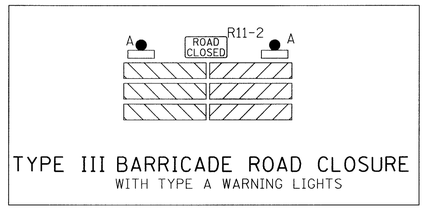

TYPE III BARRICADE ROAD CLOSURE
WITH TYPE A WARNING LIGHTS

TRAFFIC CONTROL SIGN QUANTITIES

TYPE	DESCRIPTION	SIZE	EACH	S.F.
W20-1A	ROAD WORK AHEAD	48"X48"	2	32
W20-2A	DETOUR AHEAD	48"X48"	2	32
W20-3A	ROAD CLOSED AHEAD	48"X48"	2	32
M4-8	DETOUR	24"X12"	1	2
M4-8A	END DETOUR	24"X18"	2	6
M4-9L	DETOUR (LEFT ARROW)	30"X24"	1	5
M4-9R	DETOUR (RIGHT ARROW)	30"X24"	3	15
M4-10R	DETOUR (INSIDE RIGHT ARROW)	48"X18"	1	6
M6-3	ARROW PLAQUE	18"X24"	1	3
R11-4	ROAD CLOSED TO THRU TRAFFIC	60"X30"	1	13
SP-1	RHEA CO. HWY.	48"X18"	2	12
SP-2	MARKET STREET	48"X18"	3	18
SP-3	STATE ROUTE 30	48"X18"	3	18
SP-4	500 FT. AHEAD	48"X18"	1	6
TOTAL	712-06 SIGNS (CONSTRUCTION)			200

UNOFFICIAL SET

NOT FOR BIDDING

STATE OF TENNESSEE
DEPARTMENT OF TRANSPORTATION

TRAFFIC CONTROL
DETOUR PLAN
BR. NO. 72-SR378-01.58

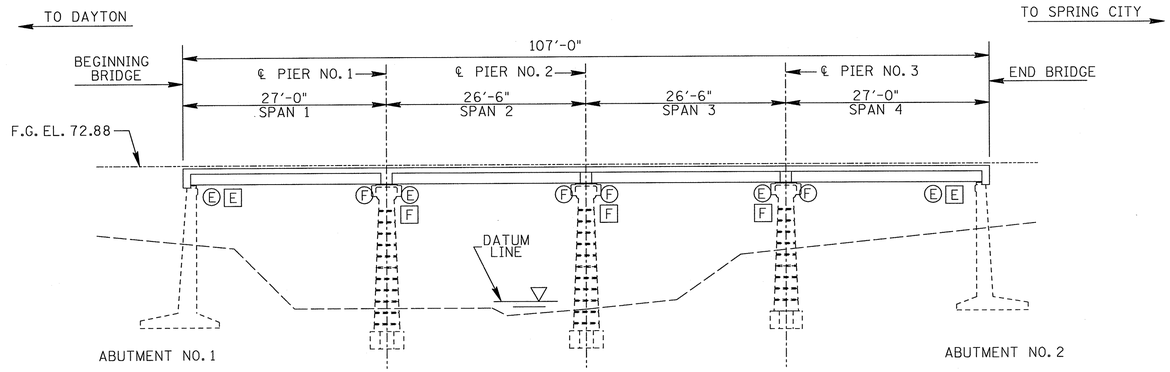

ELEVATION

ALONG ℄ BRIDGE

E: DENOTES EXPANSION SUPPORT
F: DENOTES FIXED SUPPORT

○ : DENOTES EXISTING SUPPORT CONDITION

□ : DENOTES PROPOSED SUPPORT CONDITION

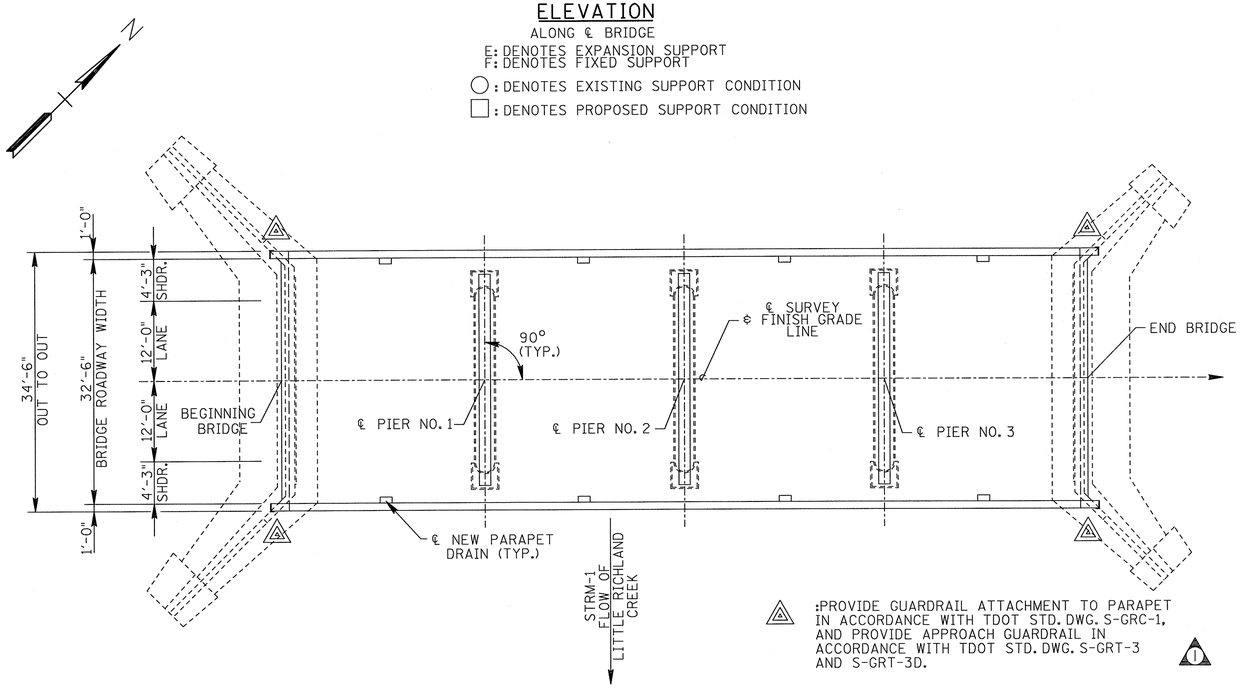

PRELIMINARY LAYOUT

DENOTES: NEW PARAPET DRAINS REQUIRED AS SHOWN
FOR DETAILS SEE TYPE 1 GRATE INLET DRAIN
DETAILS DWG. NO. STD-1-2SS.

SCOPE OF WORK

1. PROVIDE TRAFFIC DETOUR FOR BRIDGE CLOSURE DURING CONSTRUCTION.
2. DEMOLISH EXISTING SUPERSTRUCTURE. SCARIFY EXISTING ABUTMENTS AND PIERS AS REQUIRED FOR MODIFICATIONS INCLUDING CLEANING AND PAINTING STEEL SUPPORT ANGLES. CONSTRUCT SUBSTRUCTURE MODIFICATIONS AS NECESSARY TO ACCOMODATE THE NEW SUPERSTRUCTURE.
3. PERFORM SUBSTRUCTURE REPAIRS INCLUDING CONCRETE SPALL REPAIRS AND EPOXY INJECTION OF CRACKS.
4. CONSTRUCT THE NEW PRECAST CONCRETE BOX BEAMS, NEW BRIDGE DECK, NEW BRIDGERAIL, NEW APPROACH GUARDRAIL, ASHPALT TRANSITIONS, AND ROADWAY STRIPING.

NOTE: CONTRACTOR TO FIELD VERIFY THAT EXISTING SUBSTRUCTURE ELEVATIONS ARE IN CONFORMANCE WITH EXISTING PLANS PRIOR TO START OF CONSTRUCTION (UTILIZING THE TEMPORARY BENCH MARK AS DESCRIBED BELOW). NOTIFY THE ENGINEER IF ELEVATIONS ARE NOT WITHIN 0.04 FT OF EXISTING PLANS ELEVATIONS.
NOTE: TEMPORARY BENCH MARK (T.B.M.) FOR BRIDGE CONSTRUCTION TO BE TOP OF CAP AT ABUTMENT NO 1, ELEVATION 70.00.

PROJECT NO.	YEAR	SHEET NO.
72003-4201-04	2014	

REVISIONS

NO.	DATE	BY	BRIEF DESCRIPTION
1	5/20/14		ADDED REVISION DATE

LIST OF BRIDGE DRAWINGS

DWG. NO.	REV.	DESCRIPTION
BR-116-66	5-20-14	LAYOUT OF BRIDGE TO BE REPAIRED
BR-116-67	5-20-14	BRIDGE ESTIMATED QUANTITIES AND GENERAL NOTES
BR-116-68		SUPERSTRUCTURE
BR-116-69		SLAB PLAN AND DETAILS
BR-116-70		FRAMING PLAN AND DETAILS
BR-116-71	5-20-14	PRESTRESSED BOX BEAMS
BR-116-72		SUBSTRUCTURE REPAIR
BR-116-73		REPAIR DETAILS
BR-116-74		PIER MODIFICATIONS
BR-116-75		ABUTMENT MODIFICATION

LIST OF REFERENCE DRAWINGS

(TO BE PRINTED WITH PLANS)

DWG. NO.	DESCRIPTION
G-8-38	LAYOUT OF WIDENING
G-9-39	WIDENING DETAILS SPAN NO. 1-4
G-8-40	WIDENING DETAILS OF ABUTMENTS NO. 1 & 2
G-8-41	WIDENING DETAILS OF PIERS NO. 1-3
E-12-105	HANDRAIL
D-7-119	STANDARD CONCRETE ABUTMENT
D-7-121	STANDARD CONCRETE ABUTMENT
A-0-10	STANDARD CONCRETE PIER
A-6-61	STANDARD CONCRETE DECK

UNOFFICIAL SET

NOT FOR BIDDING

JOHN C. PRICE
REGISTERED ENGINEER
AGRICULTURE
NO. 17394
STATE OF TENNESSEE
5-22-14

STATE OF TENNESSEE
DEPARTMENT OF TRANSPORTATION
BUREAU OF HIGHWAYS

LAYOUT OF BRIDGE TO BE REPAIRED
STATE ROUTE 378
OVER
LITTLE RICHLAND CREEK
BRIDGE NO. 72-SR378-1.58
RHEA COUNTY
2014

DESIGNED BY	JCP	DATE	DEC. 2013
DRAWN BY	MP	DATE	DEC. 2013
SUPERVISED BY	WAP	DATE	DEC. 2013
CHECKED BY	JCP	DATE	DEC. 2013

PROJECT NO.	YEAR	SHEET NO.
72003-4201-04	2014	

REVISIONS

NO.	DATE	BY	BRIEF DESCRIPTION

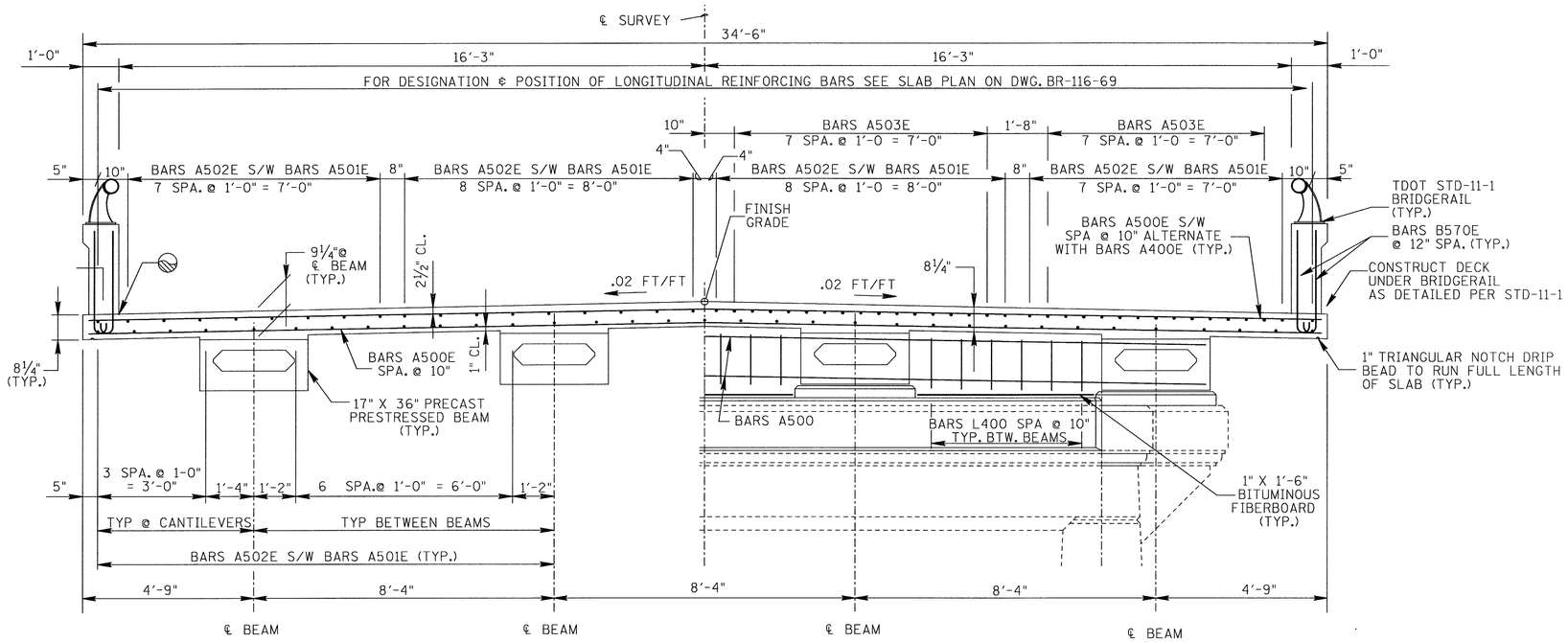

HALF SECTION @ MID-SPAN

HALF SECTION OVER PIERS

TYPICAL SECTION

LOOKING FORWARD ON SURVEY

DENOTES: SEAL CONSTRUCTION JOINTS WITH CRACK SEALER AND PAID FOR UNDER ITEM NO. 617-02 AND 617-05.

SUPERSTRUCTURE NOTES:

NOTE: THE CONTRACTOR IS SOLELY RESPONSIBLE FOR SUPPORTING THE BEAMS TO PREVENT DAMAGE DUE TO TWISTING OR OVERTURNING DURING ALL PHASES OF CONSTRUCTION.

NOTE: WHEN POURING SLAB, PROVISIONS SHALL BE MADE FOR SETTING REINFORCING STEEL FOR PARAPET. THE PARAPET SHALL NOT BE POURED UNTIL THE SLAB IS POURED AND CURED. SEE STANDARD DRAWING NO. STD-11-1 FOR BRIDGERAIL.

NOTE: SUPPORT DIAPHRAGMS AT THE PIERS AND BENTS SHALL BE FORMED AND THE BOTTOM 15 INCHES POURED AS SOON AS POSSIBLE AFTER THE BEAMS HAVE BEEN SET. THE REMAINDER OF THE DIAPHRAGM SHALL BE POURED CONCURRENTLY WITH THE DECK SLAB. ALL DIAPHRAGM CONCRETE SHALL BE INCLUDED IN THE QUANTITY FOR ITEM NO. 604-03.09, CLASS "D" CONCRETE (BRIDGE DECK), C.Y.

NOTE: ALL COSTS ASSOCIATED WITH THE NEW 8¼" CONCRETE DECK SLAB SHALL BE PAID FOR UNDER ITEM NO. 604-03.09, CLASS "D" CONCRETE (BRIDGE DECK), CY.

NOTE : COST OF EPOXY COATED REINFORCING STEEL INCLUDING MECHANICAL THREADED CONNECTORS SHALL BE PAID FOR UNDER ITEM NO. 604-02.03, EPOXY COATED REINFORCING STEEL , LB. SEE BILL OF STEEL AND BAR BENDS ON DWG NO. BR-116-69.

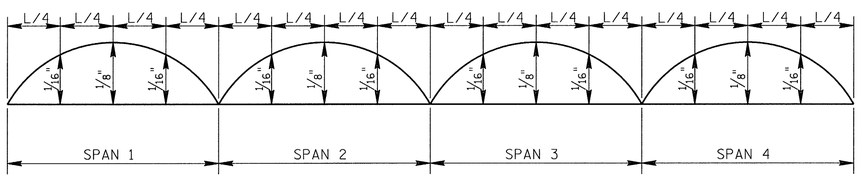

DEAD LOAD CORRECTION CURVE

DEAD LOAD CORRECTION CURVE: THIS CURVE IS FOR DEAD LOAD SLAB AND ALL DEAD LOADS THAT ARE APPLIED AFTER SLAB IS IN PLACE AND SHOULD BE CORRECTED TO COMPENSATE FOR EFFECTS DUE TO VERTICAL CURVE. IF PRESTRESSED DECK PANELS ARE USED AND THE BEAMS ARE PROFILED AFTER PANELS ARE IN PLACE, REDUCE THE DEAD LOAD CORRECTION VALUES SHOWN BY 25%.

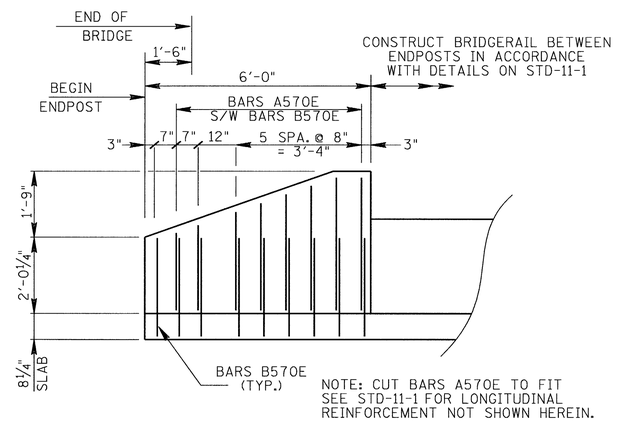

NOTE: CUT BARS A570E TO FIT SEE STD-11-1 FOR LONGITUDINAL REINFORCEMENT NOT SHOWN HEREIN.

BRIDGE RAIL DETAIL @ ENDS OF BRIDGE

SHOWING ADAPTATIONS TO STD-11-1 AT ENDPOSTS

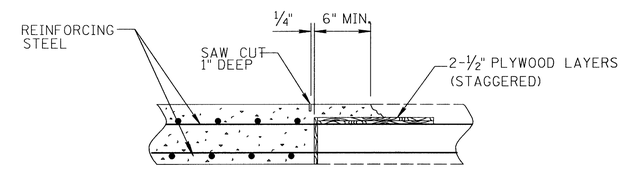

SLAB CONSTRUCTION JOINT DETAIL

NOTE: SLAB CONSTRUCTION JOINTS MAY BE LOCATED AT THE CONTRACTOR'S OPTION EXCEPT NO JOINT MAY BE LOCATED CLOSER THAN 1/5 SPAN LENGTH FROM AN INTERIOR SUPPORT UNLESS NOTED OTHERWISE. THE CONTRACTOR SHALL MAKE ADEQUATE PROVISIONS DURING PLACEMENT OF SLAB TO PREVENT THE EXTERIOR BEAM FROM TWISTING. NO EQUIPMENT SHALL BE PERMITTED ON THE BRIDGE UNTIL ALL POURS ARE MADE AND THE CONCRETE IS PROPERLY CURED. ALL SLAB CONSTRUCTION JOINTS SHALL BE IN ACCORDANCE WITH THE SLAB CONSTRUCTION JOINT DETAIL SHOWN ABOVE.

UNOFFICIAL SET

NOT FOR BIDDING

ESTIMATED QUANTITIES

ITEM NO. 604-03.09	ITEM NO. 604-02.03	ITEM NO. 604-03.02
CLASS "D" CONCRETE C.Y.	EPOXY COATED REINFORCING STEEL LBS.	REINFORCING STEEL LBS.
109	21907	329

JOHN C. PRICE REGISTERED ENGINEER AGRICULTURE NO. 17394 STATE OF TENNESSEE 4-28-14

STATE OF TENNESSEE
DEPARTMENT OF TRANSPORTATION
BUREAU OF HIGHWAYS

SUPERSTURCTURE
STATE ROUTE 378
OVER
LITTLE RICHLAND CREEK
BRIDGE NO. 72-SR378-1.58
RHEA COUNTY
2014

DESIGNED BY	JCP	DATE	DEC. 2013
DRAWN BY	MP	DATE	DEC. 2013
SUPERVISED BY	WAP	DATE	DEC. 2013
CHECKED BY	JCP	DATE	DEC. 2013

BR-116-68

PROJECT NO.	YEAR	SHEET NO.
72003-4201-04	2014	

REVISIONS

NO.	DATE	BY	BRIEF DESCRIPTION

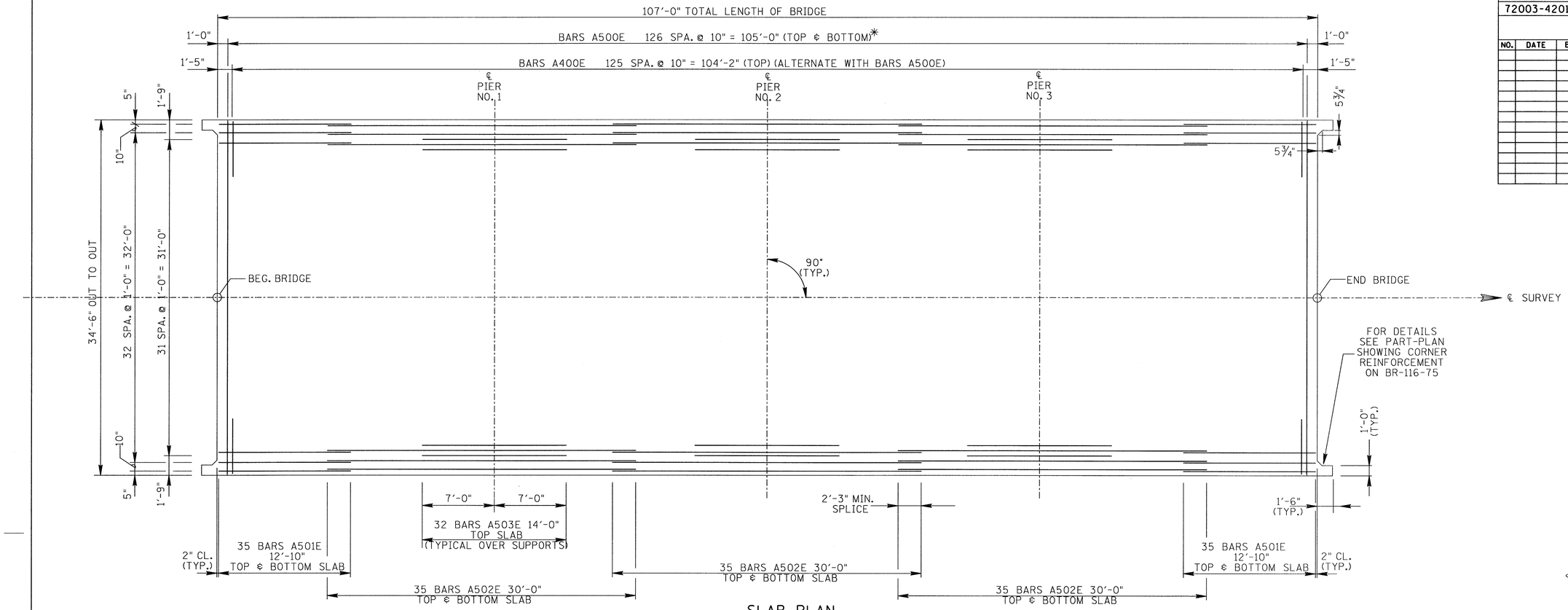

SLAB PLAN
SHOWING REINFORCEMENT

*: SEE DWG. NO BR-116-75 FOR ADDITIONAL BARS A500E IN ENDWALL.

NOTE: SEE SUPERSTRUCTURE CROSS SECTION FOR BOTTOM OF SLAB LONGITUDINAL BARS.

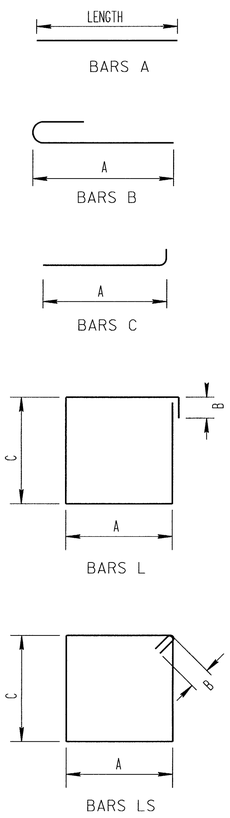

SUPERSTRUCTURE EPOXY									SUPERSTRUCTURE NON-EPOXY									
BAR	LOCATION	SIZE	NO. REQ'D	BENDING DIMENSIONS A	B	C	D	LENGTH	BAR	LOCATION	SIZE	NO. REQ'D	BENDING DIMENSIONS A	B	C	D	LENGTH
A400E	SLAB	4	252					6'-3"	A500	DIAPHRAGM	5	12					27'-8"
A500E	SLAB	5	258					34'-2"									
A501E	SLAB	5	140					12'-10"	L400	DIAPHRAGM	4	54	1'-2"	1'-0"	1'-3"		5'-10"
A502E	SLAB	5	207					30'-0"									
A503E	SLAB	5	96					14'-0"	LS400	DIAPHRAGM	4	24	1'-2"	4½"	1'-2"		5'-5"
A570E	ENDPOST	5	64					3'-5"									
B570E	SLAB/RAIL	5	416	2'-7"				3'-5"									
C500E	SLAB	5	8	2'-2"				3'-2"									

UNOFFICIAL SET

NOT FOR BIDDING

JOHN C. PRICE
REGISTERED ENGINEER
AGRICULTURE
NO. 17394
STATE OF TENNESSEE
4-28-14

STATE OF TENNESSEE
DEPARTMENT OF TRANSPORTATION
BUREAU OF HIGHWAYS

SLAB PLAN AND DETAILS
STATE ROUTE 378
OVER
LITTLE RICHLAND CREEK
BRIDGE NO. 72-SR378-1.58
RHEA COUNTY
2014

DESIGNED BY JCP DATE DEC. 2013
DRAWN BY MP DATE DEC. 2013
SUPERVISED BY WAP DATE DEC. 2013
CHECKED BY JCP DATE DEC. 2013

BR-116-69

PROJECT NO.	YEAR	SHEET NO.
72003-4201-04	2014	

REVISIONS

NO.	DATE	BY	BRIEF DESCRIPTION

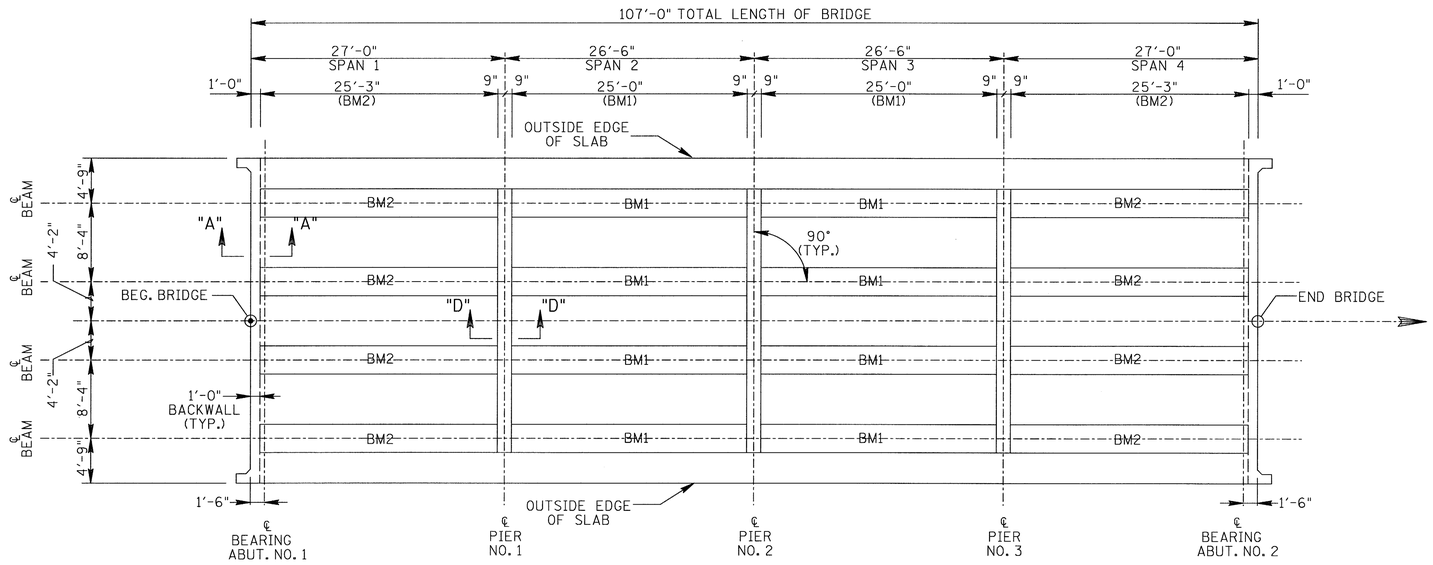

FRAMING PLAN

NOTE: SEE SHEET NO. BR-116-75 FOR SECTION "A-A"

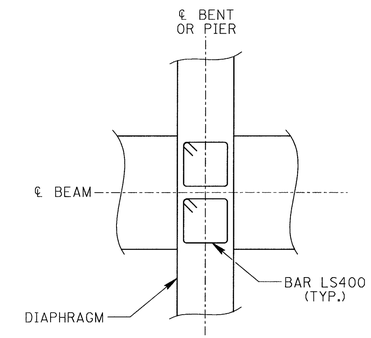

DETAIL "L"

SHOWING BARS LS400

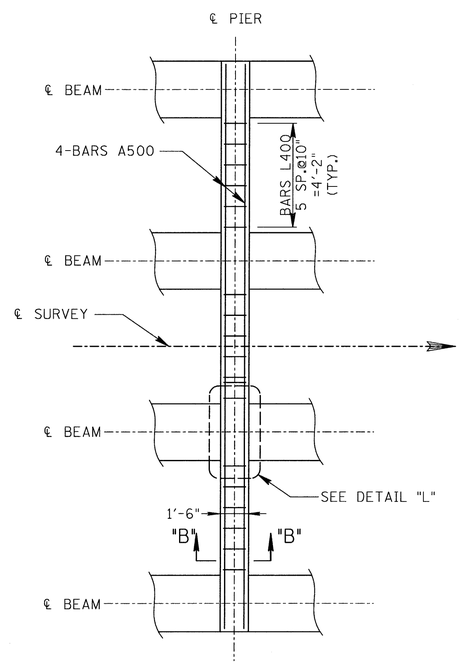

DIAPHRAGM @ PIER OR BENT

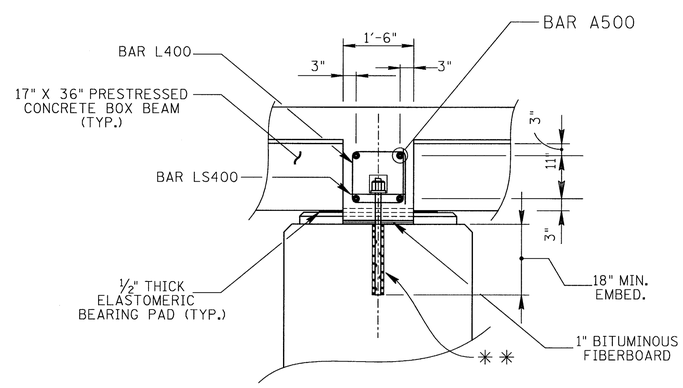

SECTION "B"-"B"

✳✳: FOR ANCHOR BOLTS IN DIAPHRAGMS, USE 1" DIA. SWEDGED ANCHOR BOLTS IN LIEU OF THE HOOKED ANCHOR BOLTS AS INDICATED ON STD-6-1. DRILL HOLE ⅛" DIAMETER LARGER THAN BOLT, AND ANCHOR WITH APPROVED EPOXY ADHESIVE FROM THE CURRENT STATE OF TENNESSEE QUALIFIED PRODUCTS LIST. ALL OTHER DETAILS TO BE IN ACCORDANCE WITH STD-6-1. REQUIRED ANCHOR BOLT LENGTH FOR DRILLED IN ANCHORS= 2'-6". SEE SHEET NOS. BR-116-74 SPECIFIC LOCATIONS DRILLED-IN ANCHOR BOLTS.

UNOFFICIAL SET

NOT FOR BIDDING

STATE OF TENNESSEE
DEPARTMENT OF TRANSPORTATION
BUREAU OF HIGHWAYS

FRAMING PLAN AND DETAILS
STATE ROUTE 378
OVER
LITTLE RICHLAND CREEK
BRIDGE NO. 72-SR378-1.58
RHEA COUNTY
2014

DESIGNED BY	JCP	DATE	DEC. 2013
DRAWN BY	MP	DATE	DEC. 2013
SUPERVISED BY	WAP	DATE	DEC. 2013
CHECKED BY	JCP	DATE	DEC. 2013

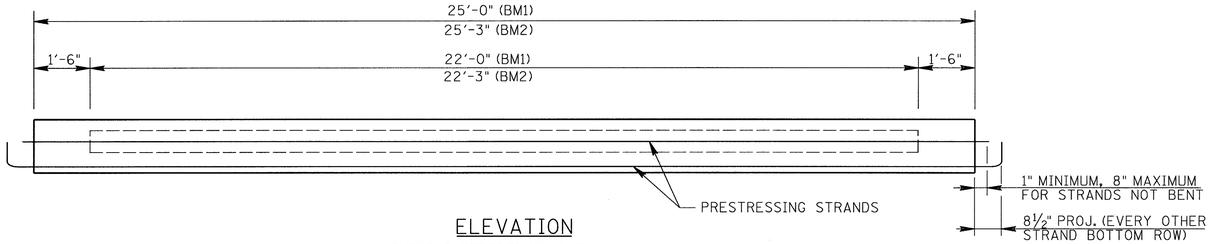

ELEVATION
SHOWING PRESTRESSING STRANDS

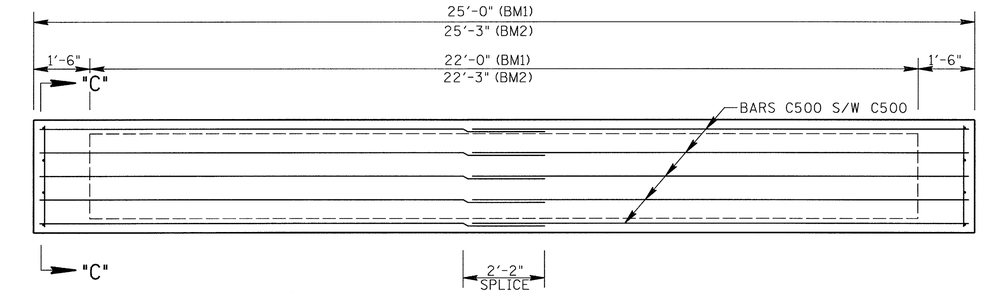

PLAN

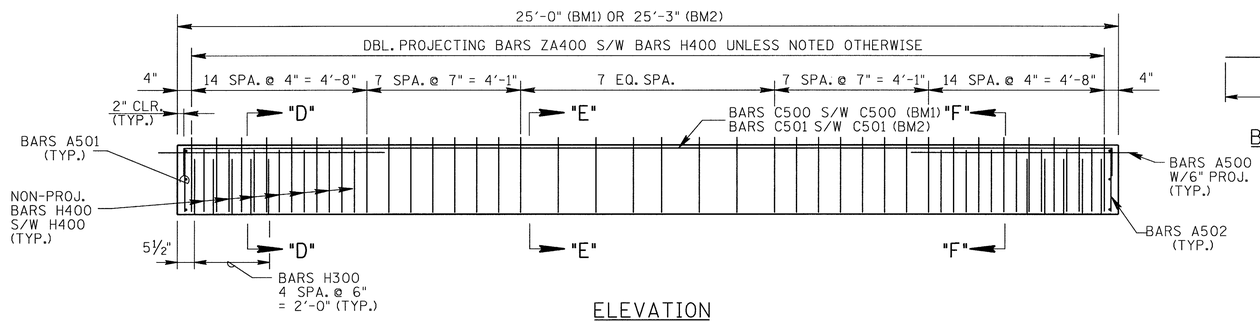

ELEVATION
SHOWING REINFORCEMENT

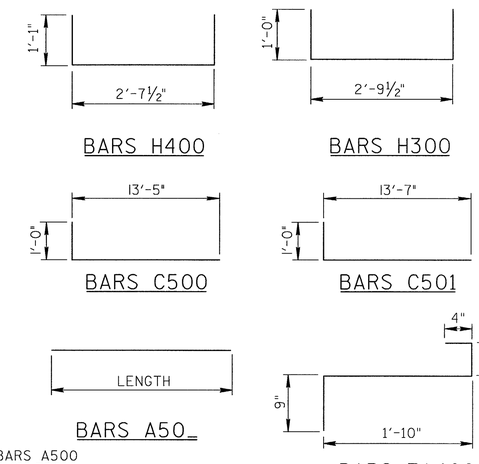

BILL OF STEEL

(PER BEAM BM1)

BAR	SIZE	NO. REQ'D.	LENGTH
A500	5	4	5'-6"
A501	5	6	2'-8"
A502	5	8	1'-1"
C500	5	10	14'-5"
H300	3	10	4'-9½"
H400	4	64	4'-9½"
ZA400	4	72	3'-6½"

(PER BEAM BM2)

BAR	SIZE	NO. REQ'D.	LENGTH
A500	5	4	5'-6"
A501	5	6	2'-8"
A502	5	8	1'-1"
C501	5	10	14'-7"
H300	3	10	4'-9½"
H400	4	50	4'-9½"
ZA400	4	72	3'-6½"

NOTE: SEE TDOT STANDARD DRAWING NO. STD-14-3 FOR ADDITIONAL BAR BENDING INFORMATION.

PROJECT NO.	YEAR	SHEET NO.
72003-4201-04	2014	

REVISIONS

NO.	DATE	BY	BRIEF DESCRIPTION
1	5/20/14		ADDED NOTE

BEAM NOTES: (1)

1. SEE STD-14-3 FOR BOX BEAM STANDARD DETAILS, NOTES AND REINFORCING.
2. THE CONCRETE FOR THIS CONSTRUCTION SHALL BE OF SUCH PROPERTIES AS TO ATTAIN A COMPRESSIVE STRENGTH OF NOT LESS THAN 6,000 PSI AT THE AGE OF 28 DAYS AND STRESS TRANSFER SHALL NOT BE MADE TO THE BRIDGE MEMBER UNTIL THE TEST SPECIMENS INDICATE THAT THE CONCRETET HAS REACHED A COMPRESSIVE STRENGTH OF AT LEAST 5,000 PSI. SEE GENERAL NOTES FOR CONCRETE FINISHING INFORMATION.
3. ALL BEAMS ARE 17" X 36" PRESTRESSED BOX BEAMS.
4. ALL PRESTRESSING STRANDS TO BE ½" DIA. ASTM GRADE 270K, 7 WIRE UNCOATED STRESS RELIEVED LOW RELAXATION PRESTRESSING STRANDS.
5. AN INITIAL FORCE OF 31,003 LBS. SHALL BE APPLIED TO EACH STRAND IN ALL BEAMS. CROSS SECTIONAL AREA EQUALS .153 IN2 PER STRAND.
6. OVERHANG BRACKETS: THE HANGER ASSEMBLY SELECTED BY THE CONTRACTOR MUST BE APPROVED BY THE ENGINEER OF STRUCTURES BEFORE THE HANGER ASSEMBLY CAN BE INSTALLED AND THE PRE-STRESSED BEAM SHOP DRAWINGS APPROVED. IT IS SOLELY THE CONTRACTOR'S RESPONSIBLITY TO ENSURE THE OVERHANG FORMWORK, BRACKETS, AND CONNECTIONS ARE BOTH STRUCTURALLY AND FUNCTIONALLY ADEQUATE AND COMPLIANT WITH THE AASHTO BRIDGE CONSTRUCTION SPECIFICATION REQUIREMENTS.
6. PRESTRESSED BEAM DESIGN DATA - PER BEAM:

LIVE LOAD DISTRIBUTION FACTORS:
LLDF MOMENT= 1.02 TRUCK/BEAM
LLDF SHEAR = 1.02 TRUCK/BEAM

COMPOSITE DEAD LOAD:
DC=175 LBS/FT PER BEAM
DW=270 LBS/FT PER BEAM
COMPOSITE SLAB DESIGN STRENGTH:
f'c =4000 PSI

NOTE: DOWNWARD DEFLECTION UNDER TOTAL DL IS NOT ALLOWED.

ESTIMATED QUANTITIES PER BEAM

ITEM	NO. REQ'D.	CLASS 'A' CONCRETE C.Y.	STEEL BAR REINFORCING LB.	PRESTRESSING STRANDS (LOW RELAXATION) LB.
BM1	8	3.0	592	162
BM2	8	3.0	594	164

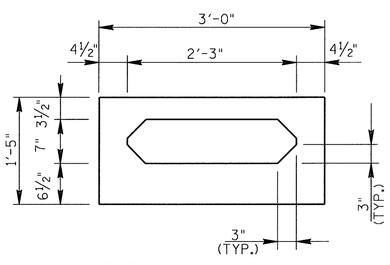

TYPICAL SECTION
(SHOWING DIMENSIONS)

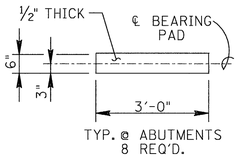

TYP. @ ABUTMENTS
8 REQ'D.

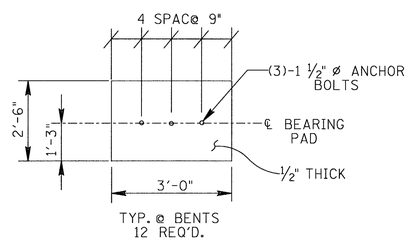

TYP. @ BENTS
12 REQ'D.

ELASTOMERIC BEARING PAD DETAILS

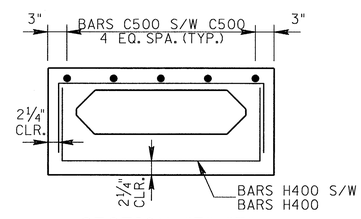

SECTION "F"-"F"
(SHOWING NON-PROJECTING STIRRUPS)

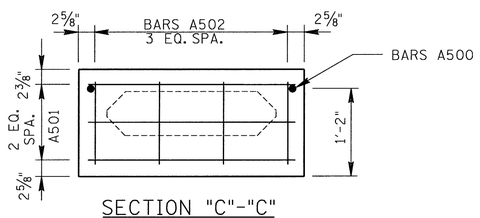

SECTION "C"-"C"
(SHOWING END REINFORCEMENT)

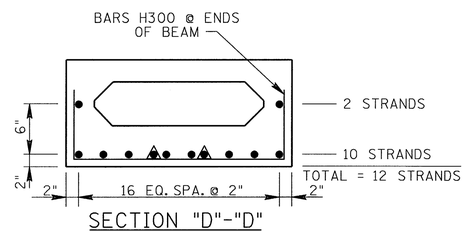

SECTION "D"-"D"
(SHOWING ½" DIA. PRESTRESSING STRANDS)
(1): DENOTES BREAK BOND 4'-0" FROM END OF BEAM

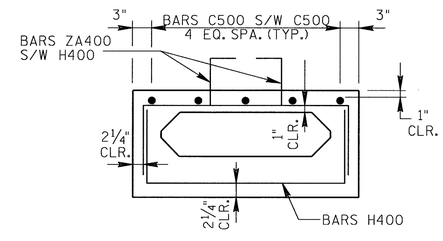

SECTION "E"-"E"
(SHOWING PROJECTING STIRRUPS)

DESIGNED BY	JCP	DATE	DEC. 2013
DRAWN BY	MP	DATE	DEC. 2013
SUPERVISED BY	WAP	DATE	DEC. 2013
CHECKED BY	JCP	DATE	DEC. 2013

UNOFFICIAL SET

NOT FOR BIDDING

JOHN C. PRICE
REGISTERED ENGINEER
AGRICULTURE
No. 17394
STATE OF TENNESSEE
5-22-14

STATE OF TENNESSEE
DEPARTMENT OF TRANSPORTATION
BUREAU OF HIGHWAYS

PRESTRESSED BOX BEAMS
STATE ROUTE 378
OVER
LITTLE RICHLAND CREEK
BRIDGE NO. 72-SR378-1.58
RHEA COUNTY
2014

BR-116-71

PROJECT NO.	YEAR	SHEET NO.
72003-4201-04	2014	

REVISIONS

NO.	DATE	BY	BRIEF DESCRIPTION

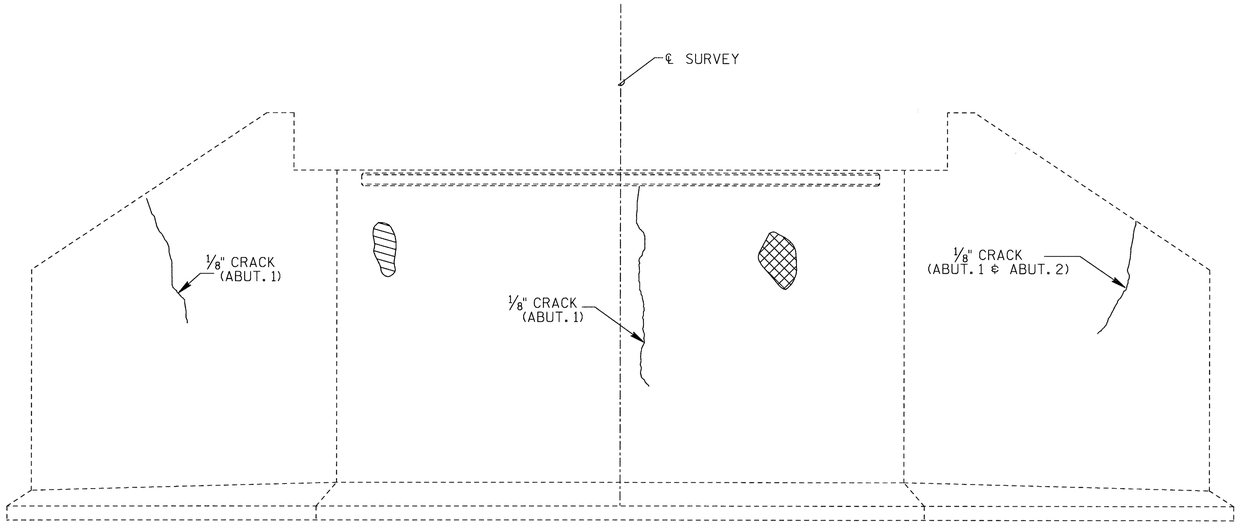

TYPICAL ABUTMENT ELEVATION

DENOTES: APPROXIMATE AREAS TO BE REPAIRED WITH HIGH EARLY STRENGTH CONCRETE, ITEM NO. 604-10.05. SEE DETAILS AND NOTE ON THIS DRAWING.

DENOTES: APPROXIMATE AREAS TO BE REPAIRED WITH QUICK-SET PATCHING MATERIAL, ITEM NO. 604-10.54. SEE DETAILS AND NOTE ON THIS DRAWING.

DENOTES: CRACK TO BE REPAIRED BY EPOXY INJECTION, ITEM NO. 604-10.62 UNLESS NOTED OTHERWISE

ESTIMATED REPAIR QUANTITIES

LOCATION OF REPAIR	ITEM NO. 604-10.54 S.F.	ITEM NO. 604-10.05 S.F.	ITEM NO. 604-10.62 S.F.
ABUT. 1	2	4	25
PIER 1	11	2	0
PIER 2	12	9	0
PIER 3	20	6	0
ABUT. 2	0	0	7
TOTAL	45	21	32

: INDICATES AREAS OF DEMOLITION

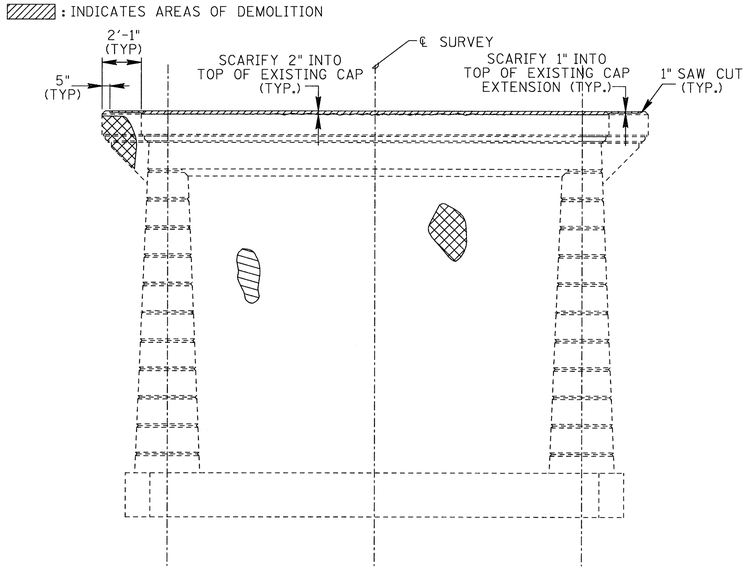

TYPICAL PIER ELEVATION

SHOWING EXISTING CAP DEMOLITON AND TYPICAL REPAIR AREAS ON PIER NO. 1 THROUGH PIER NO. 3

UNOFFICIAL SET

NOT FOR BIDDING

JOHN C. PRICE REGISTERED ENGINEER AGRICULTURE NO. 17394 STATE OF TENNESSEE 4-28-14

STATE OF TENNESSEE
DEPARTMENT OF TRANSPORTATION
BUREAU OF HIGHWAYS

SUBSTRUCTURE REPAIR
STATE ROUTE 378
OVER
LITTLE RICHLAND CREEK
BRIDGE NO. 72-SR378-1.58
RHEA COUNTY
2014

DESIGNED BY	JCP	DATE	DEC. 2013
DRAWN BY	MP	DATE	DEC. 2013
SUPERVISED BY	WAP	DATE	DEC. 2013
CHECKED BY	JCP	DATE	DEC. 2013

BR-116-72

PROJECT NO.	YEAR	SHEET NO.
72003-4201-04	2014	

REVISIONS

NO.	DATE	BY	BRIEF DESCRIPTION

EPOXY INJECTION NOTES

UNLESS OTHERWISE NOTED THE INTENT OF THIS SPECIFICATION IS FOR DESIGNATED CRACKS TO BE INJECTED THEIR FULL LENGTH AND DEPTH. DESIGNATED CRACKS SHALL BE INJECTED WITH AN APPROVED EPOXY RESIN ADHESIVE FILLING ALL VOIDS FOR THE CRACK DEPTH OR THICKNESS OF THE MEMBER. THE EPOXY RESIN ADHESIVE SHALL BE ON THE CURRENT QUALIFIED PRODUCTS LIST MAINTAINED BY THE DIVISION OF MATERIALS AND TEST. ALL CRACKS SHALL BE INJECTED USING AN ADHESIVE SUITABLE FOR THE FIELD CONDITIONS (CRACK WIDTH, TEMPERATURE, HUMIDITY, ETC.) RECOMMENDED BY THE ADHESIVE MANUFACTURER AS SHOWN ON MATERIAL DATA SHEETS. FOLLOWING INJECTION, ALL INJECTION PORTS AND CAPPING MATERIAL SHALL BE REMOVED FROM EXPOSED SURFACES LEAVING THE SURFACE SMOOTH AND FLUSH WITH THE SURROUNDING CONCRETE SURFACES.

THE CONTRACTOR SHALL HAVE SUFFICIENT EXPERIENCE AND TRAINING TO PERFORM THE EPOXY INJECTION IN ACCORDANCE WITH THESE PLANS. PRIOR TO PERFORMING ANY WORK, THE CONTRACTOR SHALL SUBMIT TO THE ENGINEER A WRITTEN PROCEDURE FOR PERFORMING THE EPOXY INJECTION. THE PROCEDURE SHALL DESCRIBE IN DETAIL HOW THE WORK WILL BE PERFORMED. THE PROCEDURE SHALL INCLUDE, BUT NOT BE LIMITED TO THE FOLLOWING INFORMATION:

1. DESCRIPTION OF EQUIPMENT
   A. THE INJECTION EQUIPMENT SHALL BE OF THE TYPE THAT MIXES ADHESIVE COMPONENTS AT THE INJECTION HEAD.
   B. THE INJECTION EQUIPMENT SHALL BE CAPABLE OF DISCHARGING MIXED ADHESIVE AT ANY PRESSURE UP TO 300 PSI. THE INJECTION EQUIPMENT SHALL BE EQUIPPED WITH GAUGES WHICH CAN MEASURE THE INJECTION PRESSURE AND VOLUME.
2. EQUIPMENT CALIBRATION PROCEDURES AND SCHEDULE.
3. MATERIALS TO BE USED (INCLUDING MANUFACTURER DATA SHEETS).
   A. CAPPING MATERIAL
   B. EPOXY ADHESIVE (TYPE TO BE APPROPRIATE FOR CRACK SIZES TO BE INJECTED).
4. PORT SPACING
   A. PORT SPACING SHALL NOT BE LESS THAN THE THICKNESS OF THE CONCRETE IN THAT LOCATION.
5. INJECTION SEQUENCE
   A. INJECTION SHALL PROCEED FROM LOWER END OF CRACK ALONG ADJACENT PARTS.
   B. SKIPPING OF PORTS DURING INJECTIONS SHALL NOT BE ALLOWED.

THE CONTRACTOR SHALL HAVE THE MANUFACTURER'S INSTRUCTIONS FOR PROPORTIONING AND MIXING AVAILABLE AT THE JOB SITE AT ALL TIMES AND SHALL ENSURE THAT THE EQUIPMENT IS SUPPLYING THE MIXED ADHESIVE IN THE CORRECT PROPORTIONS.

TO ENSURE PROPER MIXING AND PROPORITONING, SAMPLES SHALL BE TAKEN FROM THE INJECTOR HEAD. SAMPLES SHALL BE TAKEN AT THE START OF EACH WORKDAY AND EACH TIME THE ADHESIVE RESERVOIRS ARE REFILLED. THE SAMPLES SHALL BE IN A TEST CUP. THE SAMPLE SHALL BE MONITORED TO ENSURE THAT THE CURE TIME IS IN COMPLIANCE WITH THE MANUFACTURER'S DATA SHEET. IF THE SAMPLES DO NOT CURE IN THE SPECIFIED TIME THEN THE EQUIPMENT USED TO PRODUCE THE SAMPLE SHALL NOT BE USED UNTIL THE PROBLEM IS CORRECTED.

CORE SAMPLES SHALL BE TAKEN AS VERIFICATION OF THE QUALITY OF WORK. THE CONTRACTOR SHALL TAKE ONE (1) ONE (1) INCH DIAMETER (FULL DEPTH OF CONCRETE AT LOCATION CORED) CORE SAMPLE STARTING WITH THE FIRST REPAIR LOCATION THEN EVERY 3RD REPAIR LOCATION AFTERWARDS. WORK SHALL NOT PROCEED UNTIL THE CORE SAMPLE IS TAKEN AND ACCEPTED. ALL CORE SAMPLES AND HOLES SHALL BE INDEXED FOR FUTURE REFERENCE. THE ENGINEER SHALL DESIGNATE ALL LOCATIONS TO BE CORED. IF ANY CORES SHOW UNACCEPTABLE RESULTS, ALL WORK SHALL BE STOPPED UNTIL THE CONTRACTOR SUBMITS A PROPOSAL FOR CORRECTING UNACCEPTABLE WORK.

THE INITIAL CORE WILL ALSO SERVE TO QUALIFY THE FOREMAN OF THIS WORK. IF AT ANY TIME A NEW FOREMAN IS USED, HE SHALL BE QUALIFIED WITH A CORE SAMPLE.

THE CONTRACTOR, AT HIS EXPENSE, SHALL REPAIR ALL CORE HOLES WITH AN APPROVED CEMENTIIOUS PATCHING MATERIAL.

CORE SAMPLES SHALL BE VISUALLY INSPECTED TO CONFIRM THAT CRACKS ARE COMPLETELY FILLED WITH ADHESIVE. ANY CORE HAVING LESS THAN 95% OF THE CRACK FILLED WITH ADHESIVE SHALL BE CONSIDERED UNACCEPTABLE AND BE REJECTED.

CORE SAMPLES SHALL BE TESTED FOR BOND STRENGTH. SAMPLES MAY BE FRACTURED BY HAMMER BLOW TO CRACK AREA OR THROWN AT A HARD SURFACE. IF ADHESIVE FAILURE OCCURS BEFORE CONCRETE FAILURE, THE CORE SHALL BE CONSIDERED UNACCEPTABLE AND REJECTED.

PAYMENT FOR EPOXY INJECTION CRACK REPAIR SHALL BE MADE UNDER ITEM NO. 604-10.62, EPOXY INJECTION REPAIR (COMPLETE AND IN PLACE), LF AND ITEM NO. 604-10.58, EPOXY INJECTION (INJECTION), GAL.

PLACE BID FOR ITEM NO. 604-10.62, EPOXY INJECITON REPAIR (COMPLETE AND IN PLACE), LF, SHALL INCLUDE COST OF ALL LABOR AND MATERIALS (EXCEPT ADHESIVE) FOR GRINDING AND FOR SURFACE PREPARATION, CRACK PREPARATION, CAPPING, INJECTION OF ADHESIVE, ALL SAMPLING AND TESTING, REMOVAL OF CAPPING MATERIAL AND PORTS, AND OTHER INCIDENTALS. CRACKS SHALL BE MEASURED FOR PAVEMENT ALONG THE LENGTH OF THE VISIBLE SURFACE CRACK.

PRICE BID FOR ITEM NO. 604-10.58, EPOXY INJECTION (INJECTION), GAL, SHALL INCLUDE COST FOR ADHESIVE MATERIAL INJECTED ONLY.

NO PAYMENT SHALL BE MADE FOR REWORK DEEMED NECESSARY BY FAILURE OF ADHESIVE SAMPLES OR CORE SAMPLES.

ALL WORK INCLUDING SAMPLING AND TESTING SHALL BE IN THE PRESENCE OF THE ENGINEER OR HIS REPRESENTATIVE OR CONTRACT INSPECTORS. ANY WORK DONE WITHOUT INSPECTORS PRESENT SHALL NOT BE PAID. THE CONTRACTOR SHALL PROVIDE THE ENGINEER WITH WEEKLY SCHEDULES OF WORK TO BE PERFORMED. SCHEDULES SHALL BE SUBMITTED AT LEAST THREE (3) DAYS IN ADVANCE OF WORK TO BE DONE. THE ENGINEER SHALL BE NOTIFIED OF ANY CHANGE IN THE SCHEDULE A MINIMUM OF TWENTY-FOUR (24) HOURS IN ADVANCE OF CHANGE.

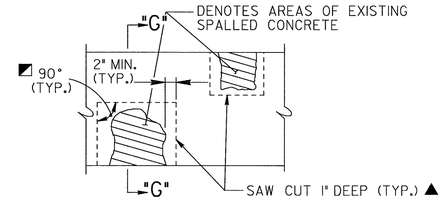

DETAIL SHOWING AREAS OF EXISTING SPALLED CONCRETE SURFACES TO BE REMOVED AND REPAIRED

◩ DENOTES: SAW CUT EXISTING CONCRETE SURFACES SO AS TO OBTAIN SQUARED CORNERS. EDGES SHALL NOT BE FEATHERED OR TAPERED.

▲ DENOTES: SAW CUTS IN SUBSTRUCTURE SHALL BE ONE INCH. EXTREME CAUTION SHALL BE TAKEN TO PREVENT DAMAGE TO EXISTING REINFORCEMENT. APPROXIMATE CLEARANCE TO REINFORCEMENT SHALL BE DETERMINED IN THE FIELD BY THE CONTRACTOR PRIOR TO SAW CUTTING. ALL REINFORCING STEEL SHALL BE COMPLETELY CLEANED TO REMOVE ALL RUST. ALL EXISTING REINFORCING SHALL REMAIN IN PLACE. ALL WORK MUST MEET WITH FULL APPROVAL OF ENGINEER.

NOTE: LIMITS AND LOCATION OF REPAIRS TO BE DESIGNATED BY THE ENGINEER. MIN. DEPTH FOR QUICK-SET PATCHING REPAIR AREAS IS 2" AND FOR HIGH EARLY STRENGTH REPAIR AREAS IS 4". DEPTH MAY BE INCREASED TO EXTEND INTO SOUND CONCRETE AS DIRECTED BY THE ENGINEER.

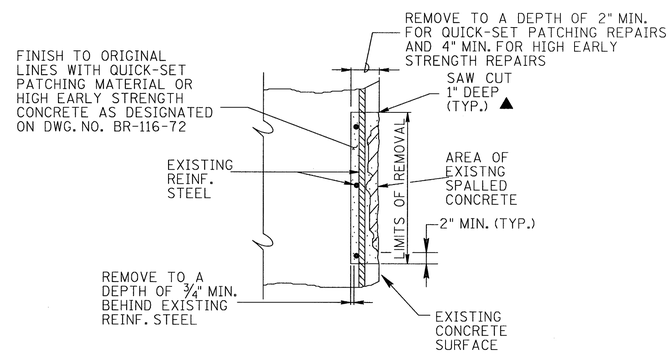

SECTION "G"-"G"

NOTE: THE COST OF REMOVING PORTIONS OF THE EXISTING CONCRETE WITHIN THE LIMITS SHOWN, SAW CUTTING, COMPLETELY CLEANING EXISTING REINFORCING STEEL, QUICK-SET PATCHING MATERIAL, HIGH EARLY STRENGTH CONCRETE, FORMING, LABOR AND ALL MISCELLANEOUS MATERIAL NECESSARY TO COMPLETE THE REPAIRS AS SHOWN SHALL BE INCLUDED IN PRICE BID FOR ITEM NO. 604-10.54 AND 604-10.05, CONCRETE REPAIRS, S.F.

NOTE: POWER DRIVEN HAND TOOLS USED FOR THE REMOVAL OF UNSOUND CONCRETE ARE SUBJECT TO THE FOLLOWING RESTRICTIONS:
1. PNEUMATIC HAMMERS HEAVIER THAN A 35 LB CLASS SHALL NOT BE USED.
2. CHIPPING HAMMERS OF THE 15 LB CLASS SHALL BE USED TO REMOVE CONCRETE FROM BEHIND THE REINFORCING STEEL.

NOTE: PATCHING MATERIAL SHALL BE POLYMER-MODIFIED CEMENTITIOUS STRUCTURAL PATCHING MATERIAL FROM THE TDOT QUALIFIED PRODUCTS LIST 13, SECTION B.6.

UNOFFICIAL SET

NOT FOR BIDDING

JOHN C. PRICE
REGISTERED ENGINEER
AGRICULTURE
NO. 17398
STATE OF TENNESSEE
4-28-14

STATE OF TENNESSEE
DEPARTMENT OF TRANSPORTATION
BUREAU OF HIGHWAYS

REPAIR DETAILS
STATE ROUTE 378
OVER
LITTLE RICHLAND CREEK
BRIDGE NO. 72-SR378-1.58
RHEA COUNTY
2014

DESIGNED BY	JCP	DATE	DEC. 2013
DRAWN BY	MP	DATE	DEC. 2013
SUPERVISED BY	WAP	DATE	DEC. 2013
CHECKED BY	JCP	DATE	DEC. 2013

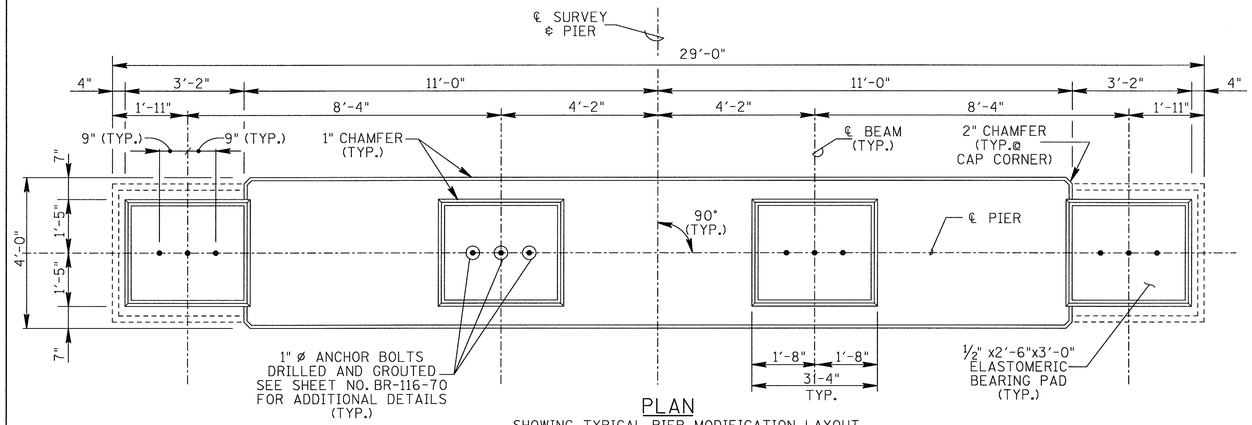

PLAN

SHOWING TYPICAL PIER MODIFICATION LAYOUT

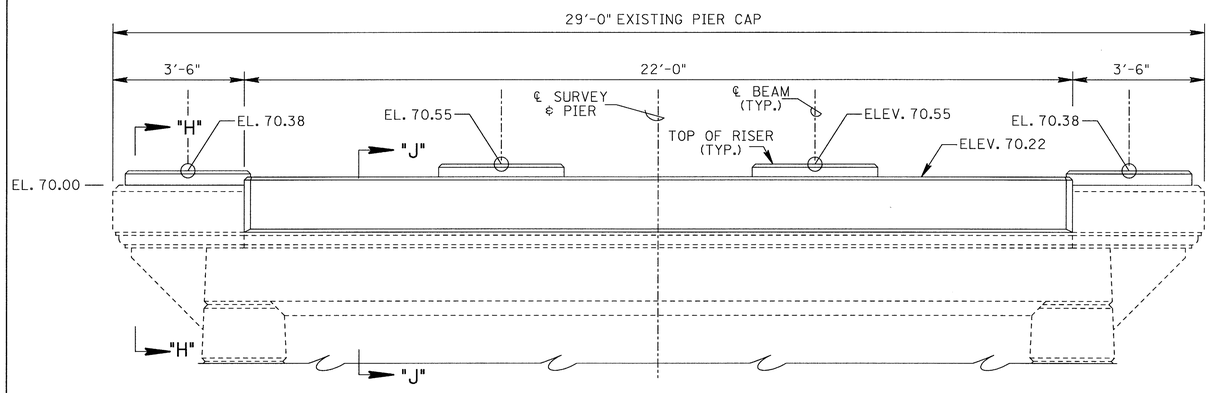

ELEVATION

SHOWING TYPICAL PIER MODIFICATION LAYOUT

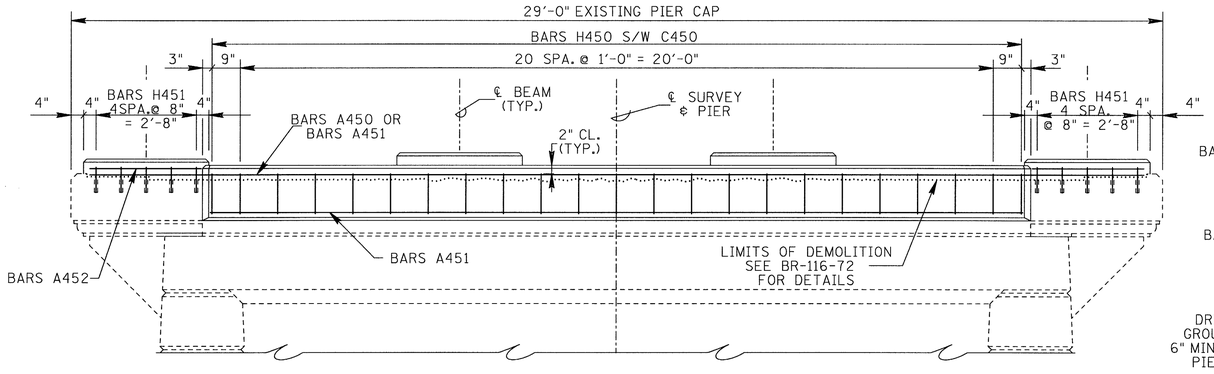

ELEVATION

SHOWING TYPICAL PIER MODIFICATION REINFORCEMENT

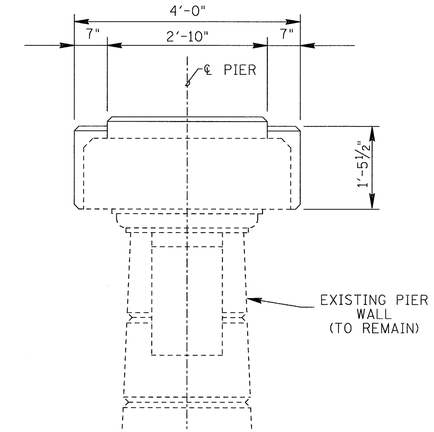

END ELEVATION

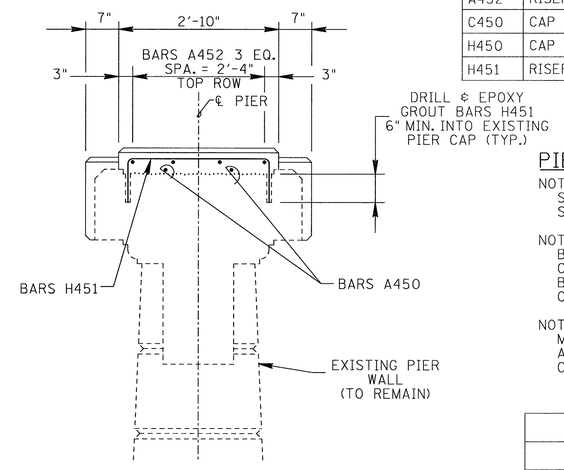

SECTION "H"-"H"

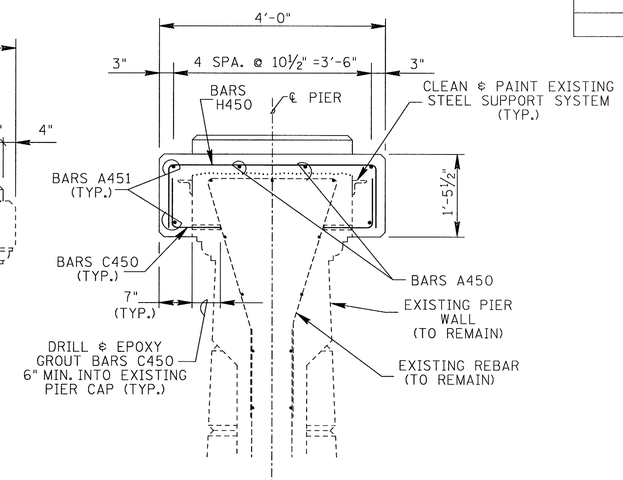

SECTION "J"-"J"

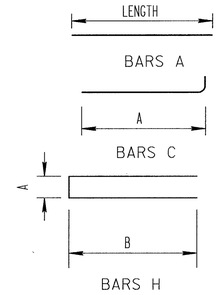

PROJECT NO.	YEAR	SHEET NO.
72003-4201-04	2014	

REVISIONS

NO.	DATE	BY	BRIEF DESCRIPTION

NON-EPOXY - ALL PIERS

BAR	LOCATION	SIZE	NO. REQ'D	BENDING DIMENSIONS A	B	C	D	LENGTH
A450	CAP	4	6					28'-0"
A451	CAP	6	12					21'-4"
A452	RISER BLOCK	6	24					3'-2"
C450	CAP	4	126	11"				1'-7"
H450	CAP	4	63	3'-8"	1'-1"			5'-10"
H451	RISER BLOCK	4	30	2'-6"	9"			4'-0"

PIER GENERAL NOTES:

NOTE: WHEN POURING CAP BEAM, PROVISIONS SHALL BE MADE FOR SETTING ANCHOR BOLTS. SEE STANDARD DRAWING STD-6-1 AND SHEET NO. BR-116-70 FOR DETAILS.

NOTE: ELASTOMERIC PADS SHALL BE IN PLACE A MINIMUM OF ONE DAY BEFORE BEING DISTURBED BY SETTING BEAMS. PLACE RUBBER BONDING CEMENT IN SUCH A WAY THAT VISIBLE CONCRETE SURFACES WILL NOT BE STAINED. THE COST OF ELASTOMERIC PADS TO BE INCLUDED IN COST OF ITEM 615-02.02, PRESTRESSED CONCRETE BOX BEAM (17"X36"), L.F.

NOTE: THE COST OF FORMING, LABOR, CONCRETE AND MISCELLANEOUS MATERIALS OTHER THAN REINFORCING STEEL NECESSARY TO MODIFY ABUTMENTS SHALL BE INCLUDED IN ITEM NO. 604-03.01, CLASS "A" CONCRETE, C.Y.

ESTIMATED QUANTITIES- ALL PIERS

ITEM NO. 604-03.01	ITEM NO. 604-03.02
CLASS "A" CONCRETE C.Y.	STEEL BAR REINFORCING LBS.
9	793

UNOFFICIAL SET

NOT FOR BIDDING

JOHN C. PRICE REGISTERED ENGINEER AGRICULTURE No. 17394 STATE OF TENNESSEE 4-28-14

STATE OF TENNESSEE
DEPARTMENT OF TRANSPORTATION
BUREAU OF HIGHWAYS

PIER MODIICATIONS
STATE ROUTE 378
OVER
LITTLE RICHLAND CREEK
BRIDGE NO. 72-SR378-1.58
RHEA COUNTY
2014

DESIGNED BY	JCP	DATE	DEC. 2013
DRAWN BY	MP	DATE	DEC. 2013
SUPERVISED BY	WAP	DATE	DEC. 2013
CHECKED BY	JCP	DATE	DEC. 2013

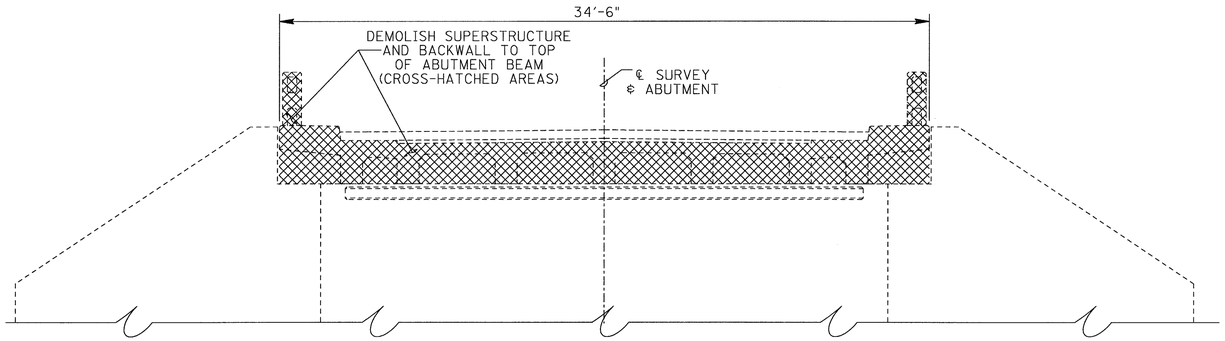

TYPICAL ELEVATION
SHOWING DEMOLITION AT ABUTMENTS

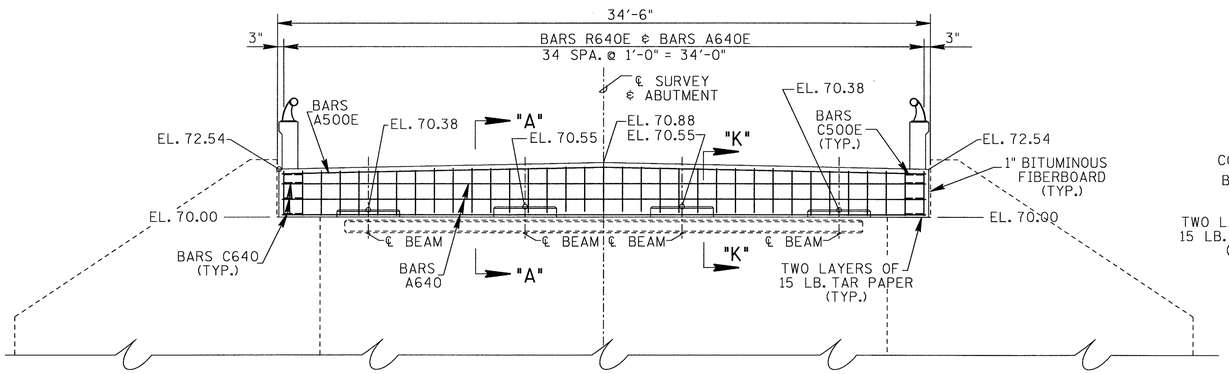

ELEVATION
SHOWING ENDWALL REINFORCEMENT

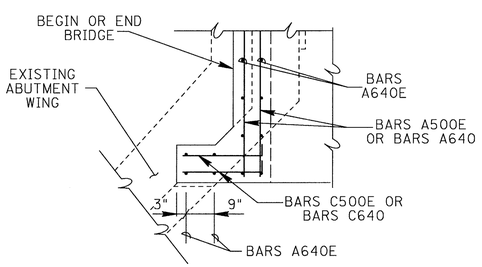

PART-PLAN
SHOWING DECK CORNER REINFORCEMENT
FOR MORE INFORMATION
SEE SHEET NO. BR-116-69

NOTE: NOT LESS THAN HALF OF THE SLAB IN THE END SPAN SHALL BE POURED PRIOR TO, OR CONCURRENTLY WITH, PLACEMENT OF ANY PART OF THE ABUTMENT BACKWALL. AT LEAST THE TOP 12 INCHES OF THE BACKWALL SHALL BE POURED CONCURRENTLY WITH THE END OF SLAB.

NOTE: ELASTOMERIC PADS SHALL BE IN PLACE A MINIMUM OF ONE DAY BEFORE BEING DISTURBED BY SETTING BEAMS. PLACE RUBBER BONDING CEMENT IN SUCH A WAY THAT VISIBLE CONCRETE SURFACES WILL NOT BE STAINED. THE COST OF ELASTOMERIC PADS TO BE INCLUDED IN COST OF ITEM 615-02.02, PRESTRESSED CONCRETE BOX BEAM (17"X 36"), L.F.

NOTE: ALL PRECAST GIRDERS TO BE IN PLACE PRIOR TO CONCRETE BEING POURED FOR BACKWALLS.

NOTE: THE COST OF FORMING, LABOR, CONCRETE AND MISCELLANEOUS MATERIALS OTHER THAN REINFORCING STEEL NECESSARY TO MODIFY ABUTMENTS SHALL BE INCLUDED IN ITEM NO. 604-03.01, CLASS "A" CONCRETE, C.Y.

NOTE: CLASS "D" CONCRETE (BRIDGE DECK) LIMITS SHALL EXTEND TO BACKWALL CONSTRUCTION JOINT SHOWN IN SECTION "A-A".

PROJECT NO.	YEAR	SHEET NO.
72003-4201-04	2014	

REVISIONS

NO.	DATE	BY	BRIEF DESCRIPTION

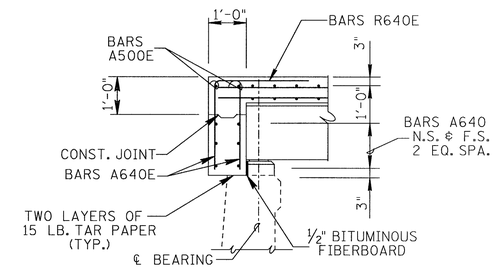

SECTION "A"-"A"

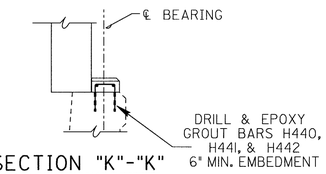

SECTION "K"-"K"
SHOWING RISER BLOCK REINFORCEMENT
(TYPICAL AT ABUTMENTS)
SEE PLAN OF RISER BLOCKS BELOW
FOR MORE INFORMATION

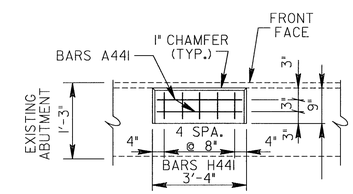

PLAN
SHOWING RISER BLOCK REINFORCEMENT

ESTIMATED QUANTITIES- BOTH ABUTMENT		
ITEM NO. 604-03.01	ITEM NO. 604-03.02	ITEM NO. 604-02.03
CLASS "A" CONCRETE C.Y.	STEEL BAR REINFORCING LBS.	EPOXY COATED REINFORCING STEEL LBS.
6	1363	764

UNOFFICIAL SET

NOT FOR BIDDING

JOHN C. PRICE REGISTERED ENGINEER AGRICULTURE NO. 17394 STATE OF TENNESSEE 4-28-14

EPOXY - BOTH ABUTMENTS								
BAR	LOCATION	SIZE	NO. REQ'D	BENDING DIMENSIONS A	B	C	D	LENGTH
A640E	SLAB	4	86					2'-3"
R640E	SLAB	5	70	2'-3"	2'-3"			4'-6"

NON-EPOXY - BOTH ABUTMENTS								
BAR	LOCATION	SIZE	NO. REQ'D	BENDING DIMENSIONS A	B	C	D	LENGTH
A440	RISER BLOCK	4	16					3'-0"
A640	ENDWALL	6	12					34'-2"
C640	ENDWALL	6	24	2'-2"				3'-2"
H440	RISER BLOCK	4	40	5"	11"			2'-3"

BARS A

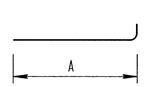

BARS C

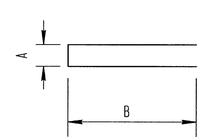

BARS H

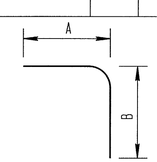

BARS R

STATE OF TENNESSEE
DEPARTMENT OF TRANSPORTATION
BUREAU OF HIGHWAYS

ABUTMENT MODIFICATIONS
STATE ROUTE 378
OVER
LITTLE RICHLAND CREEK
BRIDGE NO. 72-SR378-1.58
RHEA COUNTY
2014

DESIGNED BY	JCP	DATE	DEC. 2013
DRAWN BY	MP	DATE	DEC. 2013
SUPERVISED BY	WAP	DATE	DEC. 2013
CHECKED BY	JCP	DATE	DEC. 2013