TENNESSEE D.O.T.
DESIGN DIVISION
FILE NO.

TYPE	YEAR	PROJECT NO.	SHEET NO.
R.O.W.	2013	STP-SIP-109(30)	2
CONST.	2014	PHSIP/STP-SIP-NH-109(30)	2A

REV. 10-24-13: REMOVED PROPOSED GUARDRAIL FROM TYPICAL SECTION.

REV. 04-03-14: ADDED TYPICAL SECTION FOR BUS. ENT.

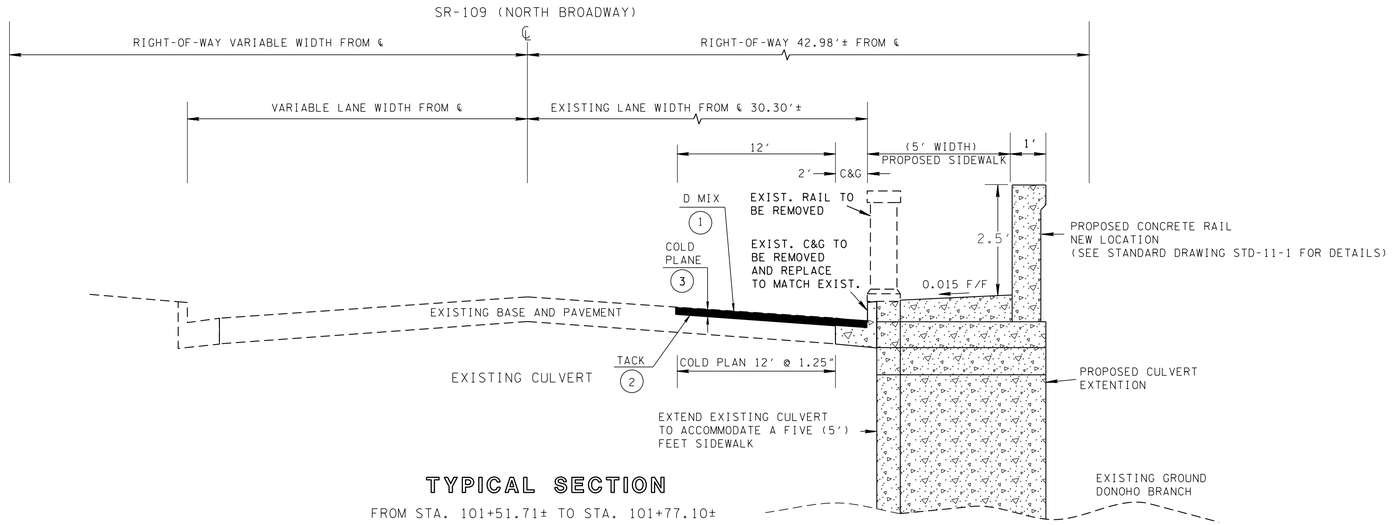

TYPICAL SECTION

FROM STA. 101+51.71± TO STA. 101+77.10±

BUSINESS

CONCRETE - 6"
BASE - 4"

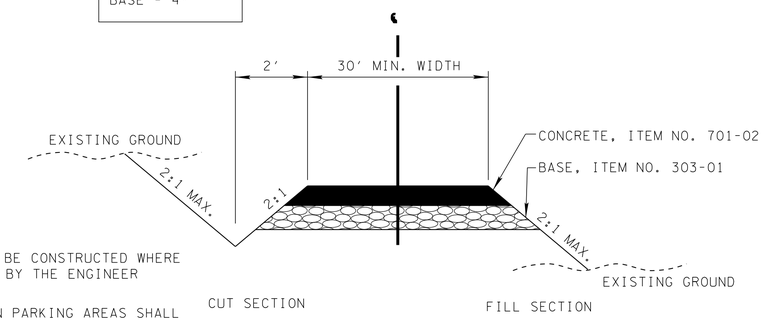

NOTE: DITCH TO BE CONSTRUCTED WHERE DIRECTED BY THE ENGINEER

NOTE: SLOPES IN PARKING AREAS SHALL BE FLATENED TO 12:1 AND DITCH IS TO BE ELIMINATED.

TYPICAL SECTION

PRIVATE DRIVE TO BUSINESS, FIELD, OR RESIDENTIAL PROPERTY

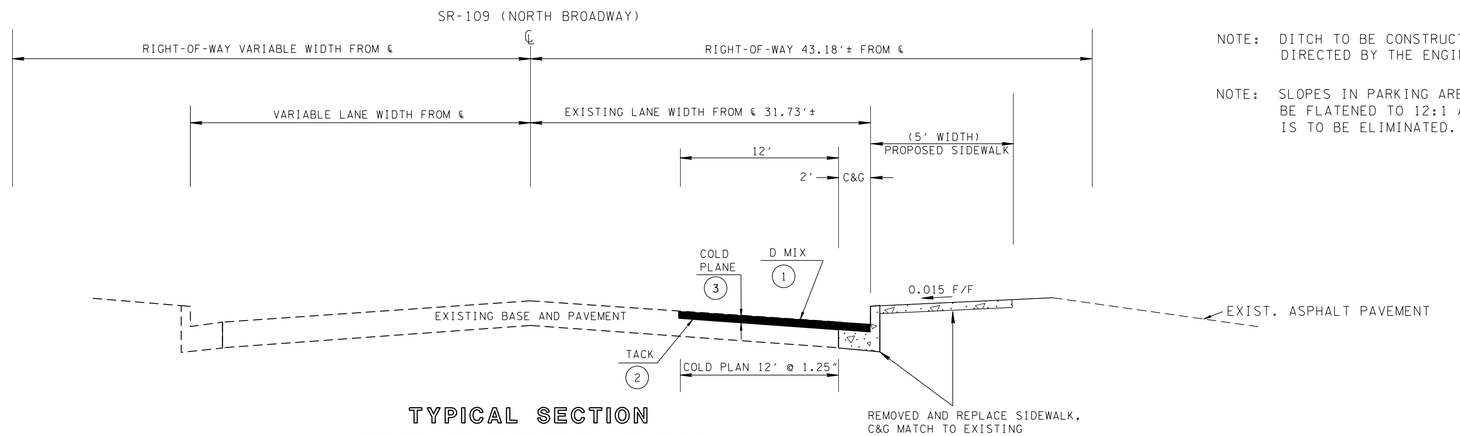

TYPICAL SECTION

* FROM STA. 100+85.49± TO STA. 101+51.71±
FROM STA. 101+77.10± TO STA. 102+45.33±

PROPOSED PAVEMENT SCHEDULE

(1) SURFACE @ 1.25" THICK (APPROX. 132.5 LBS/SY) 411-02.10 ACS MIX (PG70-22) GRADING "D"	(3) COLD PLANING @ 1.25" 415-01.01 COLD PLANING OF BITUMINOUSE PAVENT NOTE: COLD PLANING DEPTHS HAVE AN ALLOWABLE TOLERANCE OF 0.50"
(2) TACK COAT @ 0.10 GAL/S.Y. 403-01 BITUMINOUS MARTERIAL FOR TACK COAT (TC)	

SEALED BY

06/17/2014

STATE OF TENNESSEE
DEPARTMENT OF TRANSPORTATION

TYPICAL SECTIONS, CULVERT AND SIDEWALK EXTENSION DETAIL

17-JUN-2014 13:43
\\JJO3WF01.tdot.state.tn.us\03Shared\SURVEY\DESIGN\PIN 114367.01 Sumner Co SR-109 (Donoho Branch)\002A_typicalSections.sht