TENNESSEE D.O.T.
DESIGN DIVISION
FILE NO.

TENN.	YEAR	SHEET NO.
	2014	1
FED. AID PROJ. NO.		
STATE PROJ. NO.	18002-4230-04	

STATE OF TENNESSEE
DEPARTMENT OF TRANSPORTATION
BUREAU OF ENGINEERING

CUMBERLAND COUNTY

STATE ROUTE 1 OVER CANEY FORK RIVER

BRIDGE REPAIR

STATE HIGHWAY NO. 1 F.A.H.S. NO. NA

Index Of Sheets

SHEET NO.	DESCRIPTION
1	TITLE SHEET
1A	PROJECT COMMITMENTS
2	BRIDGE GENERAL NOTES AND ESTIMATED QUANTITIES
2A	ESTIMATED ROADWAY QUANTITIES AND GENERAL NOTES
2B	ROADWAY NOTES AND DETAILS
2C	TRAFFIC CONTROL PLAN
2D	EROSION CONTROL DETAILS AND NOTES

DRAWING NO.	CURRENT REVISION DATE	DESCRIPTION
		STANDARD ROADWAY DRAWINGS
RD-A-1	12-18-99	STANDARD ABBREVIATIONS
RD-L-1	10-26-94	STANDARD LEGEND
RD-L-3	4-15-04	STANDARD LEGEND FOR SIGNALIZATION AND LIGHTING
RD-L-4	4-15-04	STANDARD LEGEND FOR SIGNALIZATION AND LIGHTING
		SAFETY APPURTENANCES AND FENCE
S-GR31-1		W-BEAM GUARDRAIL
S-GRC-1		GUARDRAIL CONNECTION TO BRIDGE ENDS OR BARRIER WALL
S-PL-3		SAFETY PLAN: MINIMUM INSTALLATION AT BRIDGE ENDS
S-GRT-3		TYPE 21 GUARDRAIL TERMINAL
S-GRT-3D		TYPE 21 GUARDRAIL TERMINAL (DETAILS)
S-GRA-3		GUARDRAIL ANCHOR FOR TYPE 21, 13 AND IN-LINE TERMINALS
S-GRT-3P		EARTH PAD FOR TYPE 21 TERMINAL
		TRAFFIC CONTROL APPURTENANCES
T-M-1	11-01-11	DETAILS OF PAVEMENT MARKINGS FOR CONVENTIONAL ROADS AND MARKING ABBREVIATIONS
T-M-2	1-15-13	DETAILS OF PAVEMENT MARKINGS FOR CONVENTIONAL ROADS
T-PBR-1	6-30-09	INTERCONNECTED PORTABLE BARRIER RAIL
T-PBR-2	11-01-11	DETAIL FOR VERTICAL PANELS AND FLEXIBLE DELINEATORS
T-SG-1	11-01-11	WOODEN POLE DETAILS FOR SPAN MOUNTED SIGNALS
T-SG-2	7-29-04	LOOP LEAD-INS CONDUIT AND PULL BOXES
T-SG-3	11-11-04	STANDARD NOTES AND DETAILS OF INDUCTIVE LOOPS
T-SG-3A		ALTERNATE DETECTION DETAILS
T-SG-4		SPAN WIRE AND MESSENGER CABLE DETAILS
T-SG-5	7-29-04	CONTROLLER CABINET DETAILS
T-SG-7	1-01-11	SIGNAL HEAD ASSEMBLIES AND PEDESTRIAN PUSH BUTTON DETAILS
T-SG-7A	11-01-11	TYPICAL SIGN HEAD PLACEMENT
T-WZ-10	4-02-12	ADVANCE ROAD WORK SIGNING ON HIGHWAYS AND FREEWAYS
T-WZ-32	3-03-06	TRAFFIC CONTROL PLAN SIGNAL LAYOUT FOR TRAFFIC SIGNAL AT TWO LANE BRIDGE RECONSTRUCTION SITE
T-WZ-34	9-01-05	TRAFFIC CONTROL PLAN GENERAL NOTES FOR TRAFFIC SIGNAL AT TWO LANE BRIDGE RECONSTRUCTION SITE
T-WZ-35	4-02-12	TRAFFIC CONTROL PLAN PAY ITEM AND SIGN DETAILS FOR TRAFFIC SIGNAL AT TWO LANE BRIDGE RECONSTRUCTION SITE
		EROSION PREVENTION & SEDIMENT CONTROL
EC-STR-2	8-01-12	SEDIMENT FILTER BAGS
EC-STR-3C	8-01-12	SILT FENCE WITH WIRE BACKING
EC-STR-3E	4-01-08	SILT FENCE FABRIC JOINING DETAILS
		SPECIAL PROVISIONS
SP604CR		REPAIR OF BRIDGE DECK CRACKS

NOT TO SCALE

STATE ROUTE 1 OVER CANEY FORK RIVER
BRIDGE NO. 18-SR001-6.36

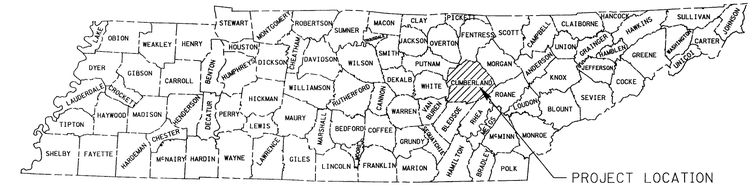

LIST OF BRIDGE DRAWINGS

DWG. NO.	REV.	DESCRIPTION
BR-116-51		LAYOUT OF BRIDGE TO BE REPAIRED
BR-116-52		BRIDGE GENERAL NOTES AND EST. QUANTITIES
BR-116-53		PHASED CONSTRUCTION DETAILS
BR-116-54		SUPERSTRUCTURE
BR-116-55		SLAB PLAN & DETAILS
BR-116-56		FRAMING PLAN & DETAILS
BR-116-57		PRESTRESSED BOX BEAMS
BR-116-58		ABUTMENT DETAILS
BR-116-59		BENTS
BR-116-60		PIERS
BR-116-61		BENT AND PIER DETAILS
BR-116-62		SUBSTRUCTURE REPAIRS
BR-116-63		EMBANKMENT REPAIR
BR-116-64		BILL OF STEEL

LIST OF REFERENCE DRAWINGS

(TO BE PRINTED WITH PLANS)

DWG. NO.	DESCRIPTION
F-12-94	LAYOUT OF BRIDGE
F-2-65	ABUTMENT AND BENT
F-2-113	CONCRETE ABUTMENT
F-10-6	CONCRETE BRIDGE
F-10-14	CONCRETE PIERS
C-4-143	CONCRETE BENTS
BR-10-91	PIER AND ABUTMENT DETAILS

ROUTE	ADT	YEAR	POSTED SPEED LIMIT
STATE ROUTE 1	6108	2014	55 MPH

UNOFFICIAL SET

NOT FOR BIDDING

APPROVED: Paul D. Degges
PAUL D. DEGGES, CHIEF ENGINEER

DATE

APPROVED:
JOHN SCHROER, COMMISSIONER

SPECIAL NOTES

PROPOSALS MAY BE REJECTED BY THE COMMISSIONER IF ANY OF THE UNIT PRICES CONTAINED THEREIN ARE OBVIOUSLY UNBALANCED, EITHER EXCESSIVE OR BELOW THE REASONABLE COST ANALYSIS VALUE.

THIS PROJECT TO BE CONSTRUCTED UNDER THE STANDARD SPECIFICATIONS OF THE TENNESSEE DEPARTMENT OF TRANSPORTATION DATED MARCH 1, 2006 AND ADDITIONAL SPECIFICATIONS AND SPECIAL PROVISIONS CONTAINED IN THE PLANS AND IN THE PROPOSAL CONTRACT.

TDOT STRUCTURAL SPECIALIST 2 VALERIE NEWBERRY

DESIGNER TRCWW, INC. CHECKED BY W. PETRONE

P.E. NO. 18002-4230-04
PIN NO. 118865.00

STANDARD BRIDGE DRAWINGS

STD-1-ISS STD-1-2SS	05-01-14	BRIDGE RAILING SINGLE SLOPE CONCRETE PARAPET STEEL SLIDER PLATE ASSEMBLIES FOR SINGLE SLOPE CONCRETE AND BRIDGE DECK DRAIN DETAILS - 2007
STD-2-1	11-01-10	BRIDGE MOUNTED INTERCONNECTED PORTABLE BARRIER RAIL
STD-4-1	4-08-05	STD. PRECAST PRESTRESSED BRIDGE DECK PANELS GENERAL DETAILS
STD-4-2	4-08-05	STD. PRECAST PRESTRESSED BRIDGE DECK PANELS DESIGN CRITERIA
STD-4-3	3-02-02	STD. PRECAST PRESTRESSED BRIDGE DECK PANELS GENERAL DETAILS
STD-4-4	6-10-96	STD. PRECAST PRESTRESSED BRIDGE DECK PANELS CONSTRUCTION DETAILS
STD-6-1	11-01-10	STANDARD SEISMIC DETAILS
STD-9-1	10-07-08	REINFORCING BAR SUPPORT DETAILS FOR CONCRETE SLABS
STD-14-3	10-15-08	STD. DETAILS FOR PRESTRESSED BOX BEAMS

STANFORD A. PARROTT
REGISTERED ENGINEER
AGRICULTURE
COMMERCE
NO. 13774
STATE OF TENNESSEE
06-18-14

U.S. DEPARTMENT OF TRANSPORTATION
FEDERAL HIGHWAY ADMINISTRATION

APPROVED:

DIVISION ADMINISTRATOR DATE

TENNESSEE D.O.T.
DESIGN DIVISION
FILE NO.

TYPE	YEAR	PROJECT NO.	SHEET NO.
CONST.	2014	18002-4230-04	1A

PROJECT COMMITMENTS

COMMITMENT ID	SOURCE DIVISION	DESCRIPTION	STA./LOCATION
EDEC001	ENVIRONMENTAL DIVISION, ECOLOGY	DUE TO CONCERNS FOR THE PRISTINE CRAYFISH, CAMBARUS PRISTINUS, TWRA REQUESTS A "SWEEP" FOR THE SPECIES IF THERE IS TO BE ANY WORK IN THE WATER. IF THERE IS TO BE ANY WORK IN THE WATER, PLEASE CONTACT ROB HOWARD (931) 212-4727 WITH TDOT ECOLOGY. NOTIFICATION SHOULD BE ONE (1) WEEK PRIOR TO WORK IN THE WATER.	

UNOFFICIAL SET

NOT FOR BIDDING

STATE OF TENNESSEE
DEPARTMENT OF TRANSPORTATION

PROJECT COMMITMENTS

BR. NO. 18-SR001-06.36

ESTIMATED BRIDGE QUANTITIES

	ITEM NO.	DESCRIPTION	UNIT	TOTAL
8	202-01.03	REMOVAL OF TRASH & DEBRIS	L.S.	1
2	202-04.01	REMOVAL OF STRUCTURES (EXISTING BRIDGE)	L.S.	1
1 3	303-01.02	GRANULAR BACKFILL (BRIDGES)	TON	20
	604-02.03	EPOXY COATED REINFORCING STEEL	LBS.	45329
10	604-03.01	CLASS "A" CONCRETE (BRIDGES)	C.Y.	28
	604-03.02	STEEL BAR REINFORCEMENT (BRIDGES)	L.S.	8236
5	604-03.09	CLASS "D" CONCRETE (BRIDGE DECK)	C.Y.	154
	604-04.01	APPLIED TEXTURE FINISH (NEW STRUCTURES)	S.Y.	598
	604-04.02	APPLIED TEXTURE FINISH (EXISTING STRUCTURES)	S.Y.	450
	604-05.31	BRIDGE DECK GROOVING (MECHANICAL)	S.Y.	520
1 9	604-10.05	CONCRETE	S.F.	75
1 11	604-10.54	CONCRETE REPAIRS	S.F.	85
4	615-02.02	PRESTRESSED CONCRETE BOX BEAM (17"X36")	L.F.	538
7	617-02	BRIDGE DECK CRACK SEALING	L.F.	428
6	617-05	SEALANT (HMWM)	GAL.	6
	620-05.01	CONCRETE PARAPET SINGLE SLOPE (STD-1-ISS)	L.F.	285
1	709-05.08	MACHINED RIP-RAP (CLASS "B")	TON	281

FOOTNOTES:

1. ITEM SHALL BE BID AS A CONTIGENCY AND MAY BE INCREASED, DECREASED OR ELIMINATED AS DIRECTED BY THE ENGINEER.
2. INCLUDES COMPLETE REMOVAL OF CONCRETE DECK GIRDER/CONCRETE DECK SUPERSTRUCTURE, AND PARAPETS (AN APPROXIMATE AREA OF 34.5' X 142.5'). ALSO INCLUDES PARTIAL REMOVAL OF EXISTING WINGWALLS. THE CONTRACTOR SHALL BE RESPONSIBLE FOR REMOVAL AND DISPOSAL OF ALL MATERIALS FROM THE SITE.
3. GRANULAR BACKFILL SHALL BE CLASS "A" GRADING, "D" MATERIAL AND INCLUDES ALL COST TO REPAIR SETTLEMENT AREAS AT ABUTMENTS AS SHOWN ON DWG BR-116-63.
4. INCLUDES ALL COST NECESSARY FOR LABOR AND MATERIALS TO INSTALL PRESTRESSED CONCRETE BOX BEAMS AS WELL AS ELASTOMERIC PADS, AND RUBBER BONDING CEMENT.
5. INCLUDES COST OF ALL LABOR, MATERIALS AND EQUIPMENT REQUIRED TO PLACE NEW 8 1/4" CONCRETE SLAB, BEAM FILLETS, AND BACKWALLS.
6. INCLUDES ALL COST TO FURNISH THE SEALER MATERIAL (HMWM) FOR SEALING THE CONSTRUCTION JOINTS. THE SEALER SHALL BE IN ACCORDANCE WITH SPECIAL PROVISION 604CR.
7. INCLUDES ALL COST TO INSTALL BRIDGE DECK CRACK SEALER (HMWM) AT CONSTRUCTION JOINTS. COST SHALL INCLUDE DECK & SURFACE PREPARATION, CLEANING, LABOR AND ANY MISCELLANOUS MATERIALS REQUIRED TO SEAL THE JOINTS ACCORDING TO SPECIAL PROVISION 604CR AND MANUFACTURE'S SPECIFICATIONS. THIS ITEM DOES NOT INCLUDE THE COST OF FURNISHING THE BRIDGE DECK SEALER.
8. INCLUDES ALL COST TO REMOVE DEBRIS AND RELATED TRASH FROM AROUND PIER NO. 1 AND PIER NO. 2.
9. INCLUDES ALL COST TO REPAIR DESIGNATED DELAMINATED AREAS ON SUBSTRUCTURES WITH HIGH-EARLY STRENGTH CONCRETE.
10. INCLUDES COST OF ALL LABOR, MATERIALS AND EQUIPMENT REQUIRED TO PLACE CONCRETE TO MODIFY ABUTMENTS, BENTS, PIERS, AND AND WINGWALLS.
11. INCLUDES ALL COST TO REPAIR DESIGNATED DELAMINATED AREAS ON SUBSTRUCTURES WITH QUICK-SET PATCHING MATERIAL.

DESIGNED BY	WAP	DATE	7-12
DRAWN BY	MLP	DATE	7-12
SUPERVISED BY	WAP	DATE	7-12
CHECKED BY	JCP	DATE	8-12

GENERAL NOTES

SPECIFICATIONS: STANDARD ROAD AND BRIDGE SPECIFICATIONS OF THE TENNESSEE DEPARTMENT OF TRANSPORTATION (MARCH 1, 2006 EDITION).

LOADING: HL-93 (DEAD LOADS TO INCLUDE 35 PSF FOR FUTURE OVERLAY).

DESIGN SPECIFICATIONS: AASHTO 2007 EDITION W/ ADDENDA.

CONCRETE SHALL BE:
CLASS "A" (CAST-IN-PLACE) SHALL BE IN ACCORDANCE WITH THE STANDARD SPECIFICATIONS. CLASS "D" CONCRETE FOR BRIDGE DECK AND OTHER CAST-IN PLACE ELEMEMTS SHALL BE IN ACCORDANCE WITH THE STANDARD SPECIFICATIONS.

HIGH EARLY STRENGTH CONCRETE (10 DAYS): THE MIX TO MEET THE REQUIREMENTS OF THE STANDARD SPECIFICATIONS, CLASS "A", EXCEPT THE CEMENT CONTENT SHALL BE A MINIMUM OF 714 LBS., THE WATER CEMENT RATIO SHALL BE A MAXIMUM OF 0.40, NO FLY ASH REPLACEMENT WILL BE PERMITTED, AND THE MINIMUM 28 DAY COMPRESSIVE STRENGTH SHALL BE 3,500 PSI. TRAFFIC SHALL NOT BE PERMITTED ON ANY OF THE REPAIR AREAS UNTIL TEST SPECIMENS ATTAIN A COMPRESSIVE STRENGTH OF 3,000 PSI MINIMUM AND THE CONCRETE HAS BEEN IN PLACE A MINIMUM OF TEN (10) DAYS.

BRIDGE RAIL SYSTEM: BUILD BRIDGE RAILING ACCORDING TO STANDARD DRAWING NO. STD-1-ISS. THE RAILING SHALL BE FORMED AND CAST PLUMB, NOT PERPENDICULAR TO THE SLAB. THE DIMENSIONS AT THE TRAFFIC FACE SHALL BE KEPT CONSTANT, WITH VARIATION DUE TO CROSS SLOPE ACCOMMODATED AT THE REAR FACE.

BRIDGE DECK SURFACE FINISH: TO BE IN ACCORDANCE WITH NOTE "C", SECTION 604.22 OF THE STANDARD SPECIFICATIONS. THE LIMITS OF THE GROOVING SHALL BE WITHIN ONE FOOT OF RAIL FACE FOR THE FULL LENGTH OF THE BRIDGE.

NOTE: THE CONTRACTOR SHALL PROVIDE 100% CONVENTIONAL FALL PROTECTION FOR WORKERS INSTALLING DECKING ABOVE 15 FEET.

CONCRETE CURING: ALL CONCRETE IN REPAIR AREA SHALL BE CURED ACCORDING TO THE STANDARD SPECIFICATIONS.

MECHANICAL BAR SPLICERS: MUST BE ON THE APPROVED LIST MAINTAINED BY THE DIVISION OF MATERIALS AND TESTS. THE BAR SPLICER SHALL MEET AASHTO STANDARD SPECIFICATIONS FOR MECHANICAL CONNECTION. WHEN EPOXY COATING IS REQUIRED, THE EXPOSED THREADS SHALL BE REPAIRED AFTER SPLICING ACCORDING TO THE STD. SPECIFICAITION SECTION 907. THE COST OF FURNISHING THE BAR SPLICERS, (AND EPOXY COATING WHEN REQUIRED) INCLUDING ALL LABOR AND MATERIALS NECESSARY FOR COMPLETE INSTALLATION, SHALL BE INCLUDED IN THE UNIT PRICE BID FOR ITEM NO. 604-02.03, LBS. OR, ITEM NO. 604-03.02, LBS.

FORMS AND FALSEWORK: CONCRETE FORM WORK, FALSEWORK, AND TEMPORARY SUPPORTS SHALL BE REMOVED FROM THE JOB SITE AFTER WORK IS COMPLETED. COST OF FORMS, FALSEWORK, AND TEMPORARY SUPPORT REMOVAL SHALL BE INCLUDED IN ITEMS BID ON. THIS WORK SHALL BE COMPLETED BEFORE FINAL PAYMENT IS APPROVED.

REINFORCING STEEL: SHALL BE ASTM A615, GRADE 60 UNLESS NOTED OTHERWISE. SEE SECTIONS 604 AND 907 OF THE STANDARD SPECIFICATIONS.

GROUTED BARS IN DRILLED HOLES: HORIZONTALLY DRILLED HOLES SHALL BE DRILLED 1/2" IN DIAMETER LARGER THAN THE BAR, CLEANED PACKED WITH NON-SHRINK GROUT, AND THE BAR ROTATED (NOT DRIVEN) TO ITS SEAT. VERTICALLY DRILLED HOLES SHALL BE DRILLED 1/4" IN DIAMETER LARGER THAN THE BAR, CLEANED, PACKED WITH EPOXY GROUT AND THE BAR SHALL BE DRIVEN TO ITS SEAT. ALL GROUTING MATERIAL SHALL BE APPROVED BY T.D.O.T. MATERIALS AND TESTS.

REQUIREMENTS AND RESTRICTIONS FOR PHASE CONSTRUCTION: THE LOCATION OF LONGITUDINAL CONSTRUCTION JOINTS SHALL NOT BE CHANGED TO ACCOMMODATE REMAIN-IN-PLACE DECK FORMS. ONE TEN (10) FOOT MINIMUM WIDE TRAFFIC LANE SHALL BE MAINTAINED AT ALL TIMES.

SPECIAL NOTE TO CONTRACTOR: CONTRACTOR SHALL USE EXTREME CARE AND TAKE ANY MEASURE NECESSARY TO INSURE THAT NO DEBRIS IS DROPPED INTO THE STREAM. THIS SHALL BE ACCOMPLISHED BY THE USE OF BASKETS, NETTING, WRAPPING, WORK PLATFORM, OR SIMILARLY EFFECTIVE MEANS. ANY DEBRIS WHICH IS ALLOWED TO DROP ON THE BANKS BELOW THE BRIDGE SHALL NOT BE ALLOWED TO ENTER THE STREAM AND SHALL BE REMOVED AND DISPOSED OF BY THE CONTRACTOR. COST OF REMOVING AND DISPOSING OF DEBRIS SHALL BE INCLUDED IN ITEMS BID. ANY CONSTRUCTION WITHIN THE STREAM CHANNEL SHALL BE SEPARATED FROM FLOWING WATER, AND ACCOMPLISHED DURING LOW FLOW CONDITIONS. THIS SHALL BE ACCOMPLISHED BY THE USE OF FLUMES, DIVERSION, CHANNEL WITH SAND BAG BERM, DIVERSION PIPE OR IN SOME CASES COFFERDAMS.

SPECIAL NOTE FOR UTILITIES: CARE SHALL BE TAKEN WHILE REMOVING AND REPLACING BRIDGE COMPONENTS SO AS NOT TO DISTURB OR DAMAGE ANY UTILITIES.

NOTE: THE CONTRACTOR SHALL CUT ONE (1) INCH DEEP INTO THE SLAB BEFORE REMOVING CONCRETE. ALL TRANSVERSE REINFORCING STEEL AT ABUTMENT WINGWALLS SHALL REMAIN IN PLACE AND BE SPLICED WITH NEW REINFORCING. THE CONTRACTOR IS RESPONSIBLE FOR AND SHALL TAKE ALL PRECAUTIONS TO ENSURE STABILITY OF THE STRUCTURE DURING REPAIRS.

NOTE: THE CONTRACTOR SHALL FIELD VERIFY ALL DIMENSIONS AND QUANTITIES BEFORE ORDERING ANY MATERIALS.

BRIDGE DECK FORMS: BRIDGE DECK FORMS FOR CONCRETE DECKS SHALL BE CONSTRUCTED USING EITHER REMOVABLE FORMS OR PERMANENT FORMS. PERMANENT FORMS MAY BE EITHER REMAIN-IN-PLACE STEEL OR PRECAST, PRESTRESSED CONCRETE PANELS. IN EITHER CASE, FORMS SHALL BE ATTACHED BY MEANS OTHER THAN WELDING TO MAIN STRUCTURAL MEMBERS OR REINFORCING STEEL. TEMPORARY ERECTION DIAPHRAGMS MUST BE USED AT THE ENDS OF PRECAST CONCRETE GIRDERS WHERE END DIAPHRAGMS, SUPPORT DIAPHRAGMS, OR ABUTMENT BACKWALLS ARE TO BE POURED CONCURRENTLY WITH THE DECK AND SHALL BE PROVIDED ELSEWHERE IN ACCORDANCE WITH THE SPECIFICATIONS TO PREVENT GIRDER ROTATION. SEE STANDARD DRAWINGS STD-4-1 THRU STD-4-4, STD-14-3, AND SECTION 604.05 OF THE STANDARD SPECIFICATIONS.

SHOP DRAWINGS: SHALL BE SUBMITTED ACCORDING TO TDOT STANDARD SPECIFICATIONS SECTION 105. SHOP DRAWINGS SHALL BE SUBMITTED TO THE DIVISION OF STRUCTURES OFFICE, OFFICE OF BRIDGE INSPECTION AND REPAIR.

BRIDGE RAILING END POST: ENDPOSTS AS SHOWN ON STD-1-ISS SHALL BE LOCATED ON THE BRIDGE SUPERSTRUCTURE AND MODIFIED TO BE INTEGRAL WITH SLAB AS SHOWN ON DWG. NO. BR-116-54.

QUICK SET PATCHING MATERIALS: QUICK-SET PATCHING MATERIAL SHALL BE A POLYMER MODIFIED CEMENTIOUS PATCHING MATERIAL. SEE TDOT QUALIFIED PRODUCTS LIST 13, SECTION B.6 FOR ACCEPTABLE PATCHING MATERIALS.

PROJECT NO.	YEAR	SHEET NO.
18002-4230-04	2014	2

REVISIONS

NO.	DATE	BY	BRIEF DESCRIPTION

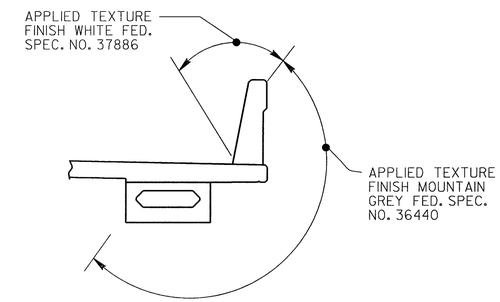

APPLIED TEXTURE FINISH SKETCHES

IN ADDITION TO THE SURFACES SHOWN IN THE APPLIED TEXTURE FINISH SKETCH, ALL EXPOSED SURFACES OF THE PIERS, WINGWALLS, ABUTMENT BEAMS AND EXTERIOR PORTIONS OF THE ENDWALL SHALL RECEIVE AN APPLIED TEXTURE FINISH.

COST OF CLEANING, FURNISHING AND APPLYING TEXTURE COATING INCLUDING LABOR AND NECESSARY MATERIALS SHALL BE INCLUDED IN ITEM NO. 604-04.01 AND 604-04.02, APPLIED TEXTURE FINISH (NEW STRUCTURES), S.Y. AND APPLIED TEXTURE FINISH (EXISTING STRUCTURES), S.Y.

THE CONTRACTOR SHALL USE CONTAINMENT SCREENS OR OTHER MEASURES AS NECESSARY TO PREVENT ANY TEXTURE COATING FROM ENTERING THE ENVIRONMENT. CONTAINMENT MEASURES SHALL BE APPROVED BY THE ENGINEER AND COST INCLUDED IN BID ITEMS.

THE EXISTING SURFACES THAT ARE TO RECEIVE A TEXTURE FINISH SHALL BE FREE OF ALL FLAKING TEXTURE COATING, RUST , DIRT, OIL, AND OTHER FOREIGN SUBSTANCES PRIOR TO THE APPLICATION OF THE TEXTURE FINISH. THE SURFACE SHALL BE CLEANED TO THE COMPLETE SATISFACTION OF THE ENGINEER. COST TO BE INCLUDED IN BID ITEMS. THE WASH WATER IS TO BE FILTERED AND PAINT CHIPS AND DEBRIS COLLECTED PRIOR TO RELEASE OF THE WATER.

A LIST OF APPROVED TEXTURE COATINGS MAY BE OBTAINED FROM THE TDOT DIVISION OF MATERIALS AND TESTS.

NO TEXTURE FINISH SHALL BE APPLIED PRIOR TO COMPLETION OF PAVING AND HAULING OPERATIONS AT BRIDGE SITE.

UNOFFICIAL SET

NOT FOR BIDDING

WINFORD A. BEYRONE
REGISTERED ENGINEER
AGRICULTURE
COMMERCE
NO. 13774
STATE OF TENNESSEE
06-18-14

STATE OF TENNESSEE
T OF TRANSPORTATION
BUREAU OF HIGHWAYS

BRIDGE GENERAL NOTES
& ESTIMATED QUANTITIES
STATE ROUTE 1
OVER
CANEY FORK RIVER
BRIDGE NO. 18-SR001-06.36
CUMBERLAND COUNTY
2012

BR-116-52

TENNESSEE D.O.T.
DESIGN DIVISION
FILE NO.

TYPE	YEAR	PROJECT NO.	SHEET NO.
CONST.	2014	18002-4230-04	2A

ESTIMATED ROADWAY QUANTITIES

	ITEM NO.	DESCRIPTION	UNIT	QUANTITY
8 2	209-05	SEDIMENT REMOVAL	CY	10
1	209-08.02	TEMPORARY SILT FENCE (WITH BACKING)	LF	315
	209-09.04	SEDIMENT FILTER BAG (15'X10')	EA.	2
	303-01	MINERAL AGGREGATE, TYPE A BASE, GRADING D	TON	25
2	303-10.01	MINERAL AGGREGATE (SIZE 57)	TON	54
	307-01.08	ASPHALT CONCRETE MIX (PG64-22) (BPMB-HM) GRADING B-M2	TON	32
	402-01	BITUMINOUS MATERIAL FOR PRIME COAT (PC)	TON	1
	402-02	AGGREGATE FOR COVER MATERIAL (PC)	TON	1
	403-01	BITUMINOUS MATERIAL FOR TACK COAT (TC)	TON	1
	411-01.10	ASPHALT CONCRETE MIX (PG64-22) GRADING D	TON	157
8	415-01.02	COLD PLANING OF BITUMINOUS PAVEMENT	SY	438
	705-01.01	GUARDRAIL AT END OF BRIDGE	LF	108
3	705-02.02	SINGLE GUARDRAIL (TYPE 2)	LF	450
	705-04.07	TAN ENERGY ABSORBING TERM (NCHRP 350, TL3)	EA.	3
	705-04.50	PORTABLE BARRIER RAIL DELINEATOR	EA.	12
4	705-08.51	PORTABLE IMPACT ATTENUATOR NCHRP350 TL-3	EA.	2
8	706-01	GUARDRAIL REMOVED	LF	713
5	712-01	TRAFFIC CONTROL	LS	1
	712-02.02	INTERCONNECTED PORTABLE BARRIER RAIL	LF	240
	712-02.47	BRIDGE MOUNTED INTERCONNECTED PORTABLE BARRIER RAIL	LF	143
	712-04.01	FLEXIBLE DRUMS (CHANNELIZING)	EA.	16
	712-05.01	WARNING LIGHTS (TYPE A)	EA.	12
	712-06	SIGNS (CONSTRUCTION)	SF	403
	712-07.03	TEMPORARY BARRICADES (TYPE III)	LF	24
	712-09.04	REMOVABLE PAVEMENT MARKING LINE(STOP LINE)	LF	24
	716-01.23	SNOWPLOWABLE PAVEMENT MARKERS (BI-DIR) (2 COLORS)	EA.	8
6	716-05.01	PAINTED PAVEMENT MARKING (4" LINE)	LM	1.05
7	716-08.20	REMOVAL OF PAVEMENT MARKINGS (LINE)	LM	1.65
	716-13.06	SPRAY THERMO PAVEMENT MARKING (40 MIL) (4 IN LINE)	LM	.3
	717-01	MOBILIZATION	LS	1
	730-40	TEMPORARY TRAFFIC SIGNAL SYSTEM	EA.	1
2	740-10.03	GEOTEXTILE (TYPE III) (EROSION CONTROL)	SY	100
	801-01.07	TEMPORARY SEEDING(WITH MULCH)	UNIT	2

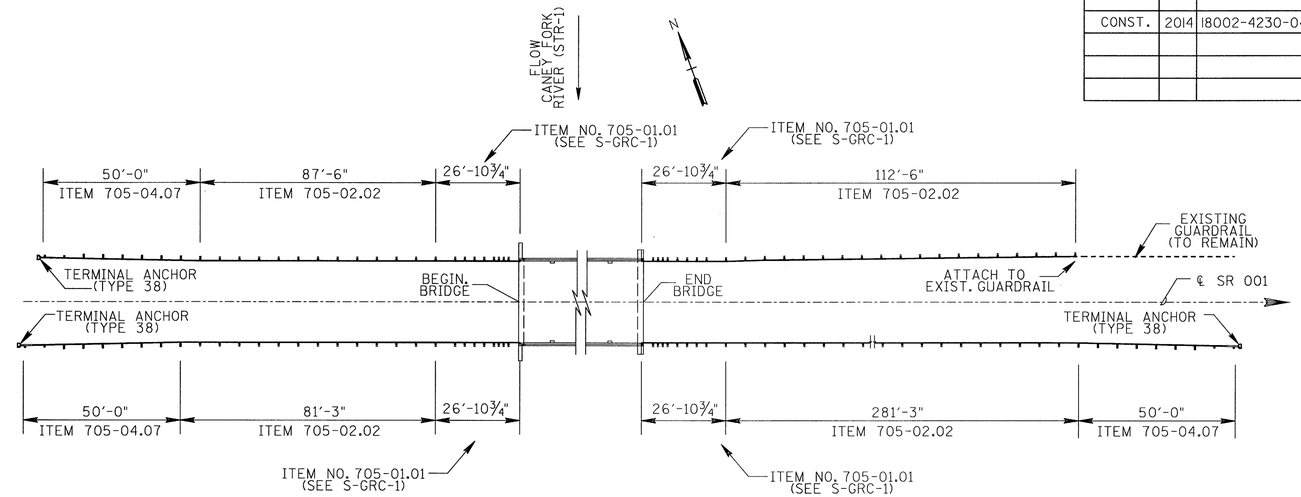

GUARDRAIL DETAIL

FOOTNOTES

1. INCLUDES THE COST OF ALL LABOR AND MATERAILS FOR FURNISHING AND INSTALLING THE TEMPORARY FILTER BARRIER WHERE LOCATED BY THE ENGINEER AND REMOVAL UPON PROJECT COMPLETION. SEE STD. DWG. EC-STR-3C. THE ENGINEER MAY INCREASE OR DECREASE OR ELIMINATE THE QUANTITY FOR THIS ITEM.
2. ITEM MAY BE INCREASED OR DECREASED AS DIRECTED BY THE ENGINEER.
3. INCLUDES COST TO ATTACH NEW GUARDRAIL TO EXISTING GUARDRAIL.
4. THIS ITEM SHALL BE A PORTABLE ENERGY ABSORBING TERMINAL MEETING THE REQUIREMENTS OF NCHRP 350 FOR TEST LEVEL 3. EXAMPLES WOULD BE A QUAD-GUARD, A REACT 350 OR A TRACC. THE PAY ITEM WILL INCLUDE FURNISHING AND INSTALLING ALL COMPONENTS AS SHOWN ON THE MANUFACTURER'S DRAWING.
5. THIS PAY ITEM WILL INCLUDE THE COST OF RELOCATION FOR THE TRAFFIC CONTROL PHASES.
6. THIS ITEM SHALL BE USED FOR PHASE I AND II TRAFFIC CONTROL TEMPORARY PAINTED LINES (4 IN.). SEE TRAFFIC CONTROL PLAN ON SHEET NO. 2C FOR LOCATION AND DESCRIPTION.
7. THIS ITEM INCLUDES THE REMOVAL OF PHASE I AND II TRAFFIC CONTROL TEMPORARY PAINTED LINES AND PERTINENT EXISTING PAINTED LINES.
8. EXISTING REMOVED MATERIALS OF THIS ITEM SHALL BECOME PROPERTY OF CONTRACTOR AND DISPOSED OF PROPERLY.

MISCELLANEOUS NOTES

1. NOTHING IN THE GENERAL NOTES OR SPECIAL PROVISIONS SHALL RELIEVE THE CONTRACTOR FROM HIS RESPONSIBILITIES TOWARD THE SAFETY AND CONVENIENCE OF THE GENERAL PUBLIC AND THE RESIDENTS ALONG THE PROPOSED CONSTRUCTION AREA.
2. THE CONTRACTOR SHALL BE RESPONSIBLE FOR ANY DAMAGE OR LOSS OF EXISTING SIGNS DURING CONSTRUCTION. EXISTING SIGNS SHALL BE REMOVED AND REPLACED AS NECESSARY.

GRADING NOTE

1. ANY AREA THAT IS DISTURBED OUTSIDE LIMITS OF CONSTRUCTION DURING THE LIFE OF THIS PROJECT SHALL BE REPAIRED BY THE CONTRACTOR AT HIS EXPENSE.

SPECIAL NOTES

1. TRAFFIC CONTROL PLAN - SEE SHEET 2C AND STD. DWG. NOS. T-WZ-32, T-WZ-34, AND T-WZ-35.
2. THE CONTRACTOR SHALL NOT REMOVE, REWORK SHOULDERS OR FLATTEN SLOPES UNTIL THE APPROPRIATE WARNING DEVICES ARE INSTALLED.

GUARDRAIL NOTES

1. THE PROPOSED GUARDRAIL, INCLUDING ANY ANCHOR SYSTEM, SHALL BE INSTALLED QUICKLY TO MINIMIZE TRAFFIC EXPOSURE TO ANY HAZARD. NO PAYMENT WILL BE MADE FOR A SECTION OF PROPOSED GUARDRAIL, INCLUDING ANCHORS, UNTIL IT IS COMPLETE IN PLACE.
2. IF ANY APPROACH END OF A SECTION OF GUARDRAIL OR BRIDGE RAIL MUST TEMPORARILY BE LEFT INCOMPLETE BARRICADES OR DRUMS WITH TYPE A LIGHTS AND ROUNDED END ELEMENTS AS MINIMUM MEASURES TO PROTECT TRAFFIC FROM THE HAZARD OF AN EXPOSED END. ALL COST OF FURNISHING AND INSTALLING A TEMPORARY ROUNDED END ELEMENT SHALL BE INCLUDED IN THE COST OF THE PROPOSED GUARDRAIL.
3. THE CONTRACTOR SHALL BE RESPONSIBLE FOR ANY DAMAGE TO PORTIONS OF EXISTING GUARDRAIL AND POSTS WHICH ARE INDICATED AS TO REMAIN IN PLACE.

UTILITY NOTES

1. THE LOCATIONS OF UTILITIES SHOWN WITHIN THESE PLANS ARE APPROXIMATE ONLY. EXACT LOCATIONS SHALL BE DETERMINED IN THE FIELD BY CONTACTING THE UTILITY COMPANIES INVOLVED. NOTIFICATION BY CALLING THE TENNESSEE ONE CALL SYSTEM, INC., AT 1-800-351-1111 AS REQUIRED BY TCA 65-31-106 WILL BE REQUIRED.
2. UNLESS OTHERWISE NOTED, ALL UTILITY ADJUSTMENTS WILL BE PERFORMED BY THE UTILITY OR IT'S REPRESENTATIVE. THE CONTRACTOR AND UTILITY OWNERS WILL BE REQUIRED TO COOPERATE WITH EACH OTHER IN ORDER TO EXPEDITE THE WORK REQUIRED BY THIS CONTRACT. ON CONTRACTS WHERE CONSTRUCTION STAKES, LINES, AND GRADES ARE CONTRACT ITEMS, THE CONTRACTOR WILL BE REQUIRED TO PROVIDE RIGHT-OF-WAY OR SLOPE STAKES, DITCH OR STREAM BED GRADES, OR OTHER ESSENTIAL SURVEY STAKING TO PREVENT CONFLICTS WITH THE HIGHWAY CONSTRUCTION. FREQUENTLY, THIS WILL BE REQUIRED AS THE FIRST ITEM OF WORK AND AT ANY LOCATION ON THE PROJECT DIRECTED BY THE ENGINEER.
3. THE CONTRACTOR WILL PROVIDE ALL NECESSARY PROTECTIVE MEASURES TO SAFEGUARD EXISITING UTILITIES FROM DAMAGE DURING CONSTRUCTION OF THIS PROJECT. IN THE EVENT THAT SPECIAL EQUIPMENT IS REQUIRED TO WORK OVER AND AROUND THE UTILITIES, THE CONTRACTOR WILL BE REQUIRED TO FURNISH SUCH EQUIPMENT. THE COST OF PROTECTING UTILITIES FROM DAMAGE AND FURNISHING SPECIAL EQUIPMENT WILL BE INCLUDED IN THE BID PRICE FOR OTHER ITEMS OF CONSTRUCTION.
4. PRIOR TO SUBMITTING HIS BID, THE CONTRACTOR WILL BE SOLELY RESPONSIBLE FOR CONTACTING OWNERS OF ALL AFFECTED UTILITIES IN ORDER TO DETERMINE THE EXTENT TO WHICH RELOCATIONS AND/OR ADJUSTMENTS WILL HAVE UPON THE SCHEDULE OF WORK FOR THE PROJECT. WHILE SOME WORK MAY BE REQUIRED "AROUND" UTILITY FACILITIES THAT WILL REMAIN IN PLACE. OTHER UTILITY FACILITIES MAY NEED TO BE ADJUSTED CONCURRENTLY WITH THE CONTRACTOR'S OPERATIONS. ADVANCE CLEAR CUTTING MAY BE REQUIRED BY THE ENGINEER AT ANY LOCATION WHERE CLEARING IS CALLED FOR IN THE SPECIFICATIONS AND CLEAR CUTTING IS NECESSARY FOR A UTILITY RELOCATION. ANY ADDITIONAL COST WILL BE INCLUDED IN THE UNIT PRICE BID FOR THE CLEARING ITEM SPECIFIED IN THE PLANS.
5. THE CONTRACTOR SHALL NOTIFY EACH INDIVIDUAL UTILITY OWNER OF HIS PLAN OF OPERATION IN THE AREA OF THE UTILITIIES. PRIOR TO COMMENCING WORK, THE CONTRACTOR SHALL CONTACT THE UTILITY OWNERS AND REQUEST THEM TO PROPERLY LOCATE THEIR RESPECTIVE UTILITY ON THE GROUND. THIS NOTIFICATION SHALL BE GIVEN AT LEAST THREE (3) BUSINESS DAYS PRIOR TO COMMENCEMENT OF OPERATIONS AROUND THE UTILITY IN ACCORDANCE WITH TCA 65-31-106.

CONSTRUCTION WORK ZONE & TRAFFIC CONTROL NOTES

1. ADVANCED WARNING SIGNS SHALL NOT BE DISPLAYED MORE THAN FORTY-EIGHT (48) HOURS BEFORE PHYSICAL CONSTRUCTION BEGINS. SIGNS MAY BE ERECTED UP TO ONE WEEK BEFORE NEEDED, IF THE SIGN FACE IS FULLY COVERED.
2. IF THE CONTRACTOR MOVES OFF THE PROJECT, HE SHALL COVER OR REMOVE ALL UNNEEDED SIGNS AS DIRECTED BY THE ENGINEER. COSTS OF REMOVAL, COVERING, AND REINSTALLING SIGNS SHALL NOT BE MEASURED AND PAID FOR SEPARATELY, BUT ALL COSTS SHALL BE INCLUDED IN THE ORIGINAL UNIT PRICE BID FOR ITEM NO. 712-06, SIGNS (CONSTRUCTION) PER SQUARE FOOT.
3. A LONG TERM BUT SPORADIC USE WARNING SIGN, SUCH AS FLAGGER SIGN, MAY REMAIN IN PLACE WHEN NOT REQUIRED PROVIDED THE SIGN FACE IS FULLY COVERED.
4. TRAFFIC CONTROL DEVICES SHALL NOT BE DISPLAYED OR ERECTED UNLESS RELATED CONDITIONS ARE PRESENT NECESSITATING WARNING.
5. USE OF BARRICADES, PORTABLE BARRIER RAILS, VERTICAL PANELS, AND DRUMS SHALL BE LIMITED TO THE IMMEDIATE AREAS OF CONSTRUCTION WHERE A HAZARD IS PRESENT. THESE DEVICES SHAL NOT BE STORED ALONG THE ROADWAY WITHIN THIRTY (30) FEET OF THE EDGE OF THE TRAVELED WAY BEFORE OR AFTER USE UNLESS PROTECTED BY GUARDRAIL, BRIDGE RAIL, AND/OR BARRIERS INSTALLED FOR OTHER PURPOSES FOR ROADWAYS WITH CURRENT ADT'S LESS THAN 1500 AND DESIGN SPEED OF LESS THAN 60 MPH. THIS DISTANCE SHALL INCREASE TO FORTY-FIVE (45) FEET FOR ROADWAYS WITH CURRENT ADT'S OF 1500 OR GREATER AND DESIGN SPEED OF 60 MPH OR GREATER OR ON THE OUTSIDE OF A HORIZONTAL CURVE. THESE DEVICES SHALL BE REMOVED FROM THE CONSTRUCTION WORK ZONE WHEN THE ENGINEER DETERMINES THEY ARE NO LONGER NEEDED. WHERE THERE IS INSUFFICIENT RIGHT-OF-WAY TO PROVIDE FOR THIS REQUIRED SETBACK, THE CONTRACTOR SHALL DETERMINE THE ALTERNATE LOCATIONS AND REQUEST THE ENGINEER'S APPROVAL TO USE THEM.
6. THE CONTRACTOR SHALL NOT BE PERMITTED TO PARK ANY VEHICLES OR CONSTRUCTION EQUIPMENT DURING PERIODS OF INACTIVITY, WITHIN THIRTY (30) FEET OF THE EDGE OF PAVEMENT WHEN THE LANE IS OPEN TO TRAFFIC UNLESS PROTECTED BY GUARDRAIL, BRIDGE RAIL, AND/OR BARRIERS INSTALLED FOR OTHER PURPOSES FOR ROADWAYS WITH CURRENT ADT'S LESS THAN 1500 AND DESIGN SPEED OF LESS THAN 60 MPH. THIS DISTANCE SHALL BE INCREASED TO FORT-FIVE (45) FEET FOR ROADWAYS WITH CURRENT ADT'S OF 1500 OR GREATER AND DESIGN SPEED OF 60 MPH OR GREATER OR ON THE OUTSIDE OF A HORIZONTAL CURVE. PRIVATELY OWNED VEHICLES SHALL NOT BE ALLOWED TO PARK WITHIN THIRTY (30) FEET OF A OPEN TRAFFIC LANE AT ANY TIME UNLESS PROTECTED AS DESCRIBED ABOVE FOR ROADWAYS WITH CURRENT ADT'S LESS THAN 1500 AND DESIGN SPEED OF LESS THAN 60 MPH. THIS DISTANCE SHALL BE INCREASED TO FORTY-FIVE (45) FEET FOR ROADWAYS WITH CURRENT ADT'S OF 1500 OR GREATER AND DESIGN SPEED OF 60 MPH OR GREATER OR ON THE OUTSIDE OF A HORIZONTAL CURVE. WHERE THERE IS INSUFFICIENT RIGHT-OF-WAY TO PROVIDE FOR THIS REQUIRED SETBACK, THE CONTRACTOR SHAL DETERMINE THE ALTERNATE LOCATIONS AND REQUEST THE ENGINEER'S APPROVAL TO USE THEM.
7. ALL DETOUR AND CONSTRUCTION SIGNING SHALL BE IN STRICT ACCORDANCE WITH THE MANUAL ON UNIFORM TRAFFIC CONTROL DEVICES.

UNOFFICIAL SET

NOT FOR BIDDING

JOHN C. PRICE
REGISTERED ENGINEER
AGRICULTURE
NO. 17394
STATE OF TENNESSEE
6-18-14

STATE OF TENNESSEE
DEPARTMENT OF TRANSPORTATION

ESTIMATED ROADWAY QUANTITIES AND GENERAL NOTES

BR. NO. 18-SR001-06.36

TENNESSEE D.O.T.
DESIGN DIVISION
FILE NO.

TYPE	YEAR	PROJECT NO.	SHEET NO.
CONST.	2014	18002-4230-04	2B

PAVEMENT EDGE DROP-OFF TRAFFIC CONTROL NOTES

A. DIFFERENCES IN ELEVATION BETWEEN ADJACENT TRAFFIC LANES OR TRAFFIC LANE AND SHOULDER WHERE THE TRAFFIC LANE IS BEING USED BY TRAFFIC, CAUSED BY BASE, PAVING OR RESURFACING:

1. DIFFERENCES IN ELEVATION BETWEEN ADJACENT ROADWAY ELEMENTS GREATER THAN 0.75 INCH AND NOT EXCEEDING 2 INCHES:

   A. WARNING SIGNS, UNEVEN PAVEMENT (W8-11) AND/OR SHOULDER DROP-OFF (W8-9A), SHALL BE PLACED IN ADVANCE OF AND THROUGHOUT THE EXPOSED AREA. MAXIMUM SPACING BETWEEN SIGNS SHALL BE 2,000 FEET WITH A MINIMUM OF 2 SIGNS PER EXPOSED AREA. WHERE UNEVEN PAVEMENT IS ENCOUNTERED, SIGNS SHALL BE PLACED ON EACH SIDE OF THE ROADWAY.

   B. DIFFERENCES IN ELEVATION BETWEEN ADJACENT TRAFFIC LANES BEING UTILIZED BY TRAFFIC CAUSED BY ADDED PAVEMENT SHALL BE ELIMINATED WITHIN THREE WORKDAYS.

   C. DIFFERENCES IN ELEVATION BETWEEN ADJACENT TRAFFIC LANES BEING UTILIZED BY TRAFFIC CAUSED BY COLD PLANING SHALL BE ELIMINATED WITHIN THREE WORKDAYS.

   D. WHEN THE DIFFERENCE IN ELEVATION IS BETWEEN THE TRAFFIC LANE BEING UTILIZED BY TRAFFIC AND SHOULDER THE DIFFERENCE IN ELEVATION SHALL BE ELIMINATED WITHIN SEVEN WORKDAYS AFTER THE CONDITION IS CREATED.

2. DIFFERENCES IN ELEVATION BETWEEN ADJACENT ROADWAY ELEMENTS GREATER THAN 2 INCHES AND NOT EXCEEDING 6 INCHES. TRAFFIC IS NOT TO BE ALLOWED TO TRAVERSE THIS DIFFERENCE IN ELEVATION.

   A. SEPARATION SHALL BE ACCOMPLISHED BY DRUMS, BARRICADES OR OTHER APPROVED DEVICES IN ACCORDANCE WITH THE FOLLOWING:

      (1) WHERE POSTED SPEEDS ARE 50 MPH OR GREATER, SPACING OF THE PROTECTIVE DEVICES SHALL NOT EXCEED 100 FEET.

      (2) WHERE POSTED SPEEDS ARE LESS THAN 50 MPH, THE MAXIMUM SPACING OF THE PROTECTIVE DEVICES IN FEET SHALL NOT EXCEED TWICE THE POSTED SPEED IN MILES PER HOUR OR 50 FEET, WHICHEVER SPACING IS GREATER.

   B. IF THE DIFFERENCE IN ELEVATION IS ELIMINATED OR DECREASED TO 2 INCHES OR LESS BY THE END OF EACH WORKDAY, CONES MAY BE USED DURING DAYLIGHT HOURS IN LIEU OF DRUMS, BARRICADES OR OTHER APPROVED PROTECTIVE DEVICES MENTIONED IN PARAGRAPH A, PROVIDED WARNING SIGNS ARE ERECTED. WARNING SIGNS (UNEVEN PAVEMENT AND/OR LOW SHOULDER) SHALL BE PLACED IN ADVANCE OF AND THROUGHOUT THE EXPOSED AREA. MAXIMUM SPACING BETWEEN SIGNS SHALL BE 2,000 FEET WITH A MINIMUM OF 2 SIGNS PER EXPOSED AREA. WHERE UNEVEN PAVEMENT IS ENCOUNTERED, SIGNS SHALL BE PLACED ON EACH SIDE OF THE ROADWAY.

   C. WHEN THE DIFFERENCE IN ELEVATION IS BETWEEN THE THROUGH TRAFFIC LANE AND THE SHOULDER AND THE ELEVATION DIFFERENCE IS LESS THAN 3.5 INCHES, THE CONTRACTOR MAY USE WARNING SIGNS AND/OR PROTECTIVE DEVICES AS APPLICABLE AND APPROVED BY THE ENGINEER. SEE PARAGRAPH A REGARDING USE OF DRUMS, BARRICADES OR OTHER APPROVED PROTECTIVE DEVICES. WARNING SIGNS (UNEVEN PAVEMENT AND/OR LOW SHOULDER) WILL BE PLACED IN ADVANCE OF AND THROUGHOUT THE EXPOSED AREA. MAXIMUM SPACING BETWEEN SIGNS SHALL BE 2,000 FEET WITH A MINIMUM OF 2 SIGNS PER EXPOSED AREA. WHERE UNEVEN PAVEMENT IS ENCOUNTERED, SIGNS SHALL BE PLACED ON EACH SIDE OF THE ROADWAY. IN THESE SITUATIONS, THE CONTRACTOR SHALL LIMIT HIS OPERATIONS TO ONE WORK ZONE NOT EXCEEDING 2 MILES IN LENGTH UNLESS OTHERWISE NOTED ON THE PLANS OR APPROVED BY THE ENGINEER. ONCE THE CONTRACTOR BEGINS WORK IN A WORK ZONE, A CONTINUOUS OPERATION SHALL BE MAINTAINED UNTIL THE DIFFERENCE IN ELEVATION IS ELIMINATED. SIMULTANEOUS WORK ON SEPARATE ROADWAYS OF DIVIDED HIGHWAYS WILL BE CONSIDERED INDEPENDENTLY IN REGARD TO RESTRICTION OF WORK ZONE ACTIVITY.

B. THE DIFFERENCE IN ELEVATION IS FARTHER THAN 8 FEET FROM THE NEAREST TRAFFIC LANE BUT NOT MORE THAN 30 FEET FROM THE NEAREST TRAFFIC LANE: SEPARATION SHALL BE ACCOMPLISHED BY DRUMS, BARRICADES OR OTHER APPROVED DEVICES IN ACCORDANCE WITH THE FOLLOWING:

1. WHERE POSTED SPEEDS ARE 50 MPH OR GREATER, SPACING OF THE PROTECTIVE DEVICES SHALL NOT EXCEED 100 FEET.

2. WHERE POSTED SPEEDS ARE LESS THAN 50 MPH, THE MAXIMUM SPACING OF THE PROTECTIVE DEVICES IN FEET SHALL NOT EXCEED TWICE THE POSTED SPEED IN MILES PER HOUR OR 50 FEET, WHICHEVER SPACING IS GREATER. THE CONTRACTOR SHALL SCHEDULE THE WORK SO AS TO MINIMIZE THE TIME TRAFFIC IS EXPOSED TO AN ELEVATION DIFFERENCE. ONCE THE CONTRACTOR BEGINS AN ACTIVITY THAT CREATES AN ELEVATION DIFFERENCE, THE ACTIVITY SHALL BE PURSUED AS A CONTINUOUS OPERATION UNTIL THE ELEVATION DIFFERENCE IS ELIMINATED.

PAVEMENT MARKING NOTES

1. TEMPORARY PAVEMENT LINE MARKINGS ON INTERMEDIATE LAYERS OF PAVEMENT SHALL BE REFLECTIVE TAPE OR REFLECTORIZED PAINT INSTALLED TO PERMANENT STANDARDS AT THE END OF EACH DAY'S WORK. SHORT, UNMARKED SECTIONS WILL NOT BE ALLOWED. THESE MARKINGS WILL BE MEASURED AND PAID FOR UNDER ITEM NO. 712-09.01 REMOVABLE PAVEMENT MARKING LINE PER LINEAR FOOT.

2. PERMANENT PAVEMENT LINE MARKING SHALL BE 4" SPRAY THERMOPLASTIC (40 MIL) INSTALLED TO PERMANENT STANDARDS AT THE END OF EACH DAY'S WORK. SHORT UNMARKED SECTIONS SHALL NOT BE ALLOWED. PAVEMENT MARKINGS WILL BE MEASURED AND PAID FOR UNDER ITEM NO. 716-13.06 , SPRAY THERMO PVMT MRKNG (40 MIL) (4 IN LINE), L.M. THE CONTRACTOR SHALL HAVE THE OPTION OF USING REFLECTORIZED PAINT INSTALLED TO PERMANENT STANDARDS AT THE END OF EACH DAY'S WORK AND THEN INSTALLING THE PERMANENT MARKINGS AFTER THE PAVING OPERATION IS COMPLETED. THE TEMPORARY MARKINGS FOR THE FINAL SURFACE WILL NOT BE MEASURED AND PAID FOR DIRECTLY, BUT THE COSTS ARE TO BE INCLUDED IN THE PRICE BID FOR THE PERMANENT MARKINGS.

3. BEFORE OPENING THE LANE SHIFT TO TRAFFIC, THE TRANSITIONAL MARKINGS ON THE EXISTING ROADWAY MUST BE IN PLACE. THESE MARKINGS WILL BE MEASURED AND PAID FOR UNDER ITEM NO. 712-09.01 REMOVABLE PAVEMENT MARKING LINE, L.F. ALL EXISTING MARKINGS SHALL BE OBLITERATED AND ALL EXISTING RAISED PAVEMENT MARKERS SHALL BE REMOVED TO ELIMINATE CONFLICTING MARKINGS. REMOVAL OF THE EXISTING MARKINGS AND RAISED PAVEMENT MARKERS WILL NOT BE MEASURED AND PAID FOR DIRECTLY, BUT THE COST WILL BE INCLUDED IN ITEM NO. 712-01 TRAFFIC CONTROL, LUMP SUM.

PAVING RESURFACING NOTES

1. THE CONTRACTOR SHALL BE REQUIRED TO COLD PLANE AND PAVE IN THE DIRECTION OF TRAFFIC.

2. IN ALL CASES FOR THE LENGTH OF THE PAVEMENT TRANSITION THE THICKNESS AND WIDTH OF THE RESURFACING AND ANY ADDTIONAL PAVEMENT MATERIALS SHALL BE AS DIRECTED BY THE TDOT ENGINEER.

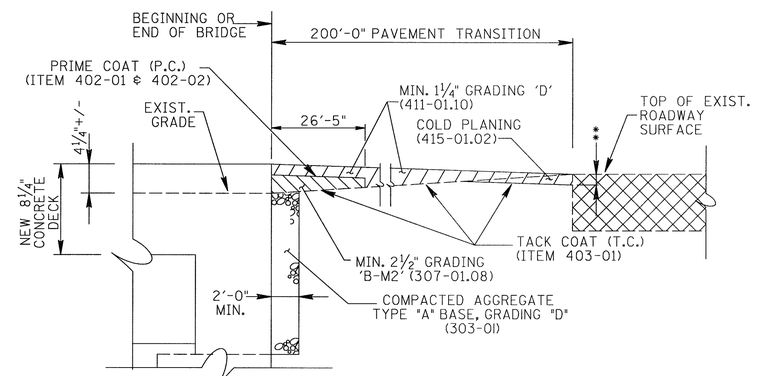

PAVEMENT TRANSITION DETAIL

NOTES:

PAVEMENT AT EACH END OF BRIDGE TO BE REPAIRED AFTER COMPLETION OF BRIDGE REPAIRS TO PROVIDE A SMOOTH RIDING SURFACE FROM EXISTING ASPHALT TO NEW CONCRETE DECK.

** DENOTES: 1" VERTICAL SAWCUT TO ENSURE SMOOTH EDGE AT END OF ASPHALT TRANSITION. SAWCUT TO BE INCLUDED IN BID ITEMS.

SEE SECTION 617 AND 906.04 OF THE TENNESSEE STANDARD SPECIFICATIONS FOR ROAD AND BRIDGE CONSTRUCTION.

REMOVAL OF EXISTING ASPHALT FROM THE BRIDGE FOR FULL WIDTH AND LENGTH TO BE PAID UNDER ITEM NO. 202-04.01.

REMOVAL OF 50' EXISTING ASPHALT TRANSITION FOR FULL WIDTH OF APPROACHES (TWO 12' LANES) TO BE PAID FOR UNDER ITEM NO. 415-01.02,

ASPHALT TO BE SLOPED OR FEATHERED AS NECESSARY TO OBTAIN DESIRED SURFACE SLOPE.

UNOFFICIAL SET

NOT FOR BIDDING

JOHN C. PRICE
REGISTERED ENGINEER
AGRICULTURE
No. 17394
STATE OF TENNESSEE
6-18-14

STATE OF TENNESSEE
DEPARTMENT OF TRANSPORTATION

ROADWAY NOTES AND DETAILS

BR. NO. 18-SR001-06.36

TENNESSEE D.O.T.	DESIGN DIVISION	FILE NO.

TYPE	YEAR	PROJECT NO.	SHEET NO.
CONST.	2014	18002-4230-04	2C

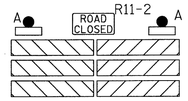

TYPE III BARRICADE ROAD CLOSURE

WITH TYPE A WARNING LIGHTS
(@ RIVER ACCESS)

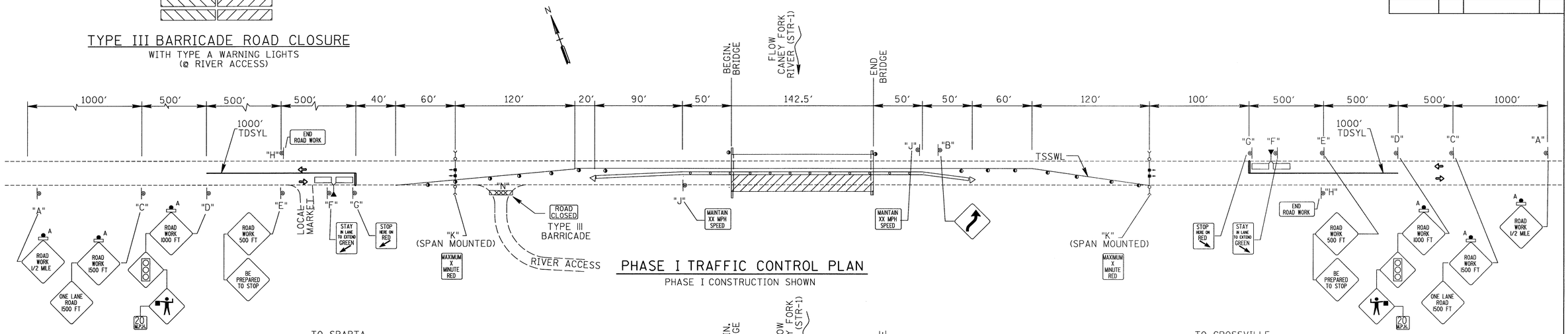

PHASE I TRAFFIC CONTROL PLAN

PHASE I CONSTRUCTION SHOWN

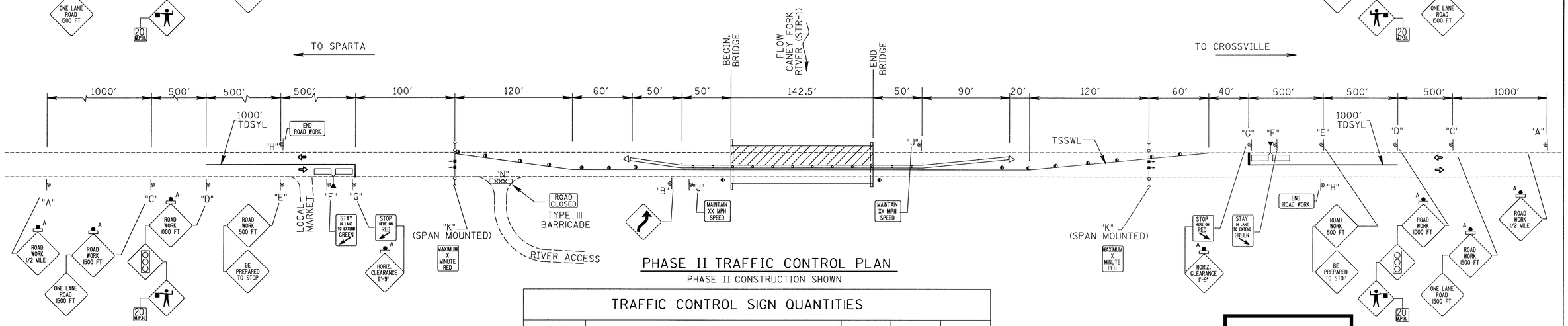

PHASE II TRAFFIC CONTROL PLAN

PHASE II CONSTRUCTION SHOWN

TRAFFIC CONTROL SIGN QUANTITIES

	TYPE	DESCRIPTION	SIZE	EACH	S.F.
1	W20-1A	ROAD WORK ½ MILE (LOCATION "A")	48"X48"	2	32
1	W20-1B	ROAD WORK 1500 FT. (LOCATION "C")	48"X48"	2	32
1	W20-1C	ROAD WORK 1000 FT. (LOCATION "D")	48"X48"	2	32
	W20-1D	ROAD WORK 500 FT. (LOCATION "E")	48"X48"	2	32
	W20-4B	ONE LANE ROAD 1500 FT. (LOCATION "C")	48"X48"	2	32
	W3-3	SIGNAL HEAD (SYMBOL) (LOCATION "D")	36"X36"	2	18
	W20-7A	FLAGGER AHEAD (SYMBOL) (LOCATION "D")	36"X36"	2	18
	W20-7B	BE PREPARED TO STOP (LOCATION "E")	48"X48"	2	32
	W13-2	SUPPLEMENTAL PLATE (20MPH) (LOCATION "D")	24"X18"	2	6
	R10-6	STOP HERE ON RED (LOCATION "G")	24"X36"	2	12
	R10-6(MOD)	STAY IN LANE TO EXTEND GREEN (LOCATION "F")	30"X42"	2	17.5
	G20-2A	END ROAD WORK (LOCATION "H")	36"X18"	2	9
	SPECIAL	MAINTAIN 20 M.P.H. SPEED (LOCATION "J")	42"X36"	2	21
	SPECIAL	MAXIMUM 3 MINUTE RED (LOCATION "K")	42"X48"	2	28
3 2 1	SPECIAL	ONE LANE BRIDGE 3 MILES HORIZ. CL. 11'-9"	48"X78"	2	52
1	SPECIAL	HORIZ. CLEARANCE 11'-9" (LOCATION "G")	36"X36"	2	18
	W1-4aR	LANE SHIFT (SYMBOL)(LOCATION "B")	30"X30"	1	6.25
	R11-2	ROAD CLOSED (LOCATION "N")	24"X30"	1	5
	TOTAL	712-06 SIGNS (CONSTRUCTION)			403

1 DENOTES SIGN WITH TYPE "A" WARNING LIGHTS"

2 SIGN LOCATED ON STATE ROUTE 1 AT INTERSECTION WITH POMONA RD.

3 SIGN LOCATED ON STATE ROUTE 1 AT INTERSECTION WITH ARTHUR SEAGRAVES RD.

TRAFFIC CONTROL NOTES

ADVANCE WARNING SIGNS TO BE PLACED PRIOR TO CONSTRUCTION AND REMAIN IN PLACE UNTIL THE COMPLETION OF THIS PROJECT.

THE TRAFFIC CONTROL PLAN DOES NOT RELIEVE THE CONTRACTOR OF THE RESPONSIBILITY OF INSTALLING TRAFFIC CONTROL DEVICES IN ACCORDANCE WITH THE CURRENT EDITION OF THE "MANUAL ON UNIFORM TRAFFIC CONTROL DEVICES".

TRAFFIC SIGNALS SHALL BE PLACED IN FULL VIEW OF ALL PRIVATE DRIVES.

TYPE "A" WARNING LIGHTS SHALL BE PLACED ON DESIGNATED ADVANCED WARNING SIGNS.

IF ADDITIONAL SIGNS ARE DEEMED NECESSARY BY THE ENGINEER, THEY SHALL BE FURNISHED AND INSTALLED AT THE UNIT PRICE BID, ITEM NO. 712-06, SIGNS (CONSTRUCTION), S.F.

FOR ADDITIONAL DETAILS AND NOTES SEE STD. DWGS. T-WZ-32, T-WZ-34, AND T-WZ-35.

UNOFFICIAL SET

NOT FOR BIDDING

TRAFFIC CONTROL LEGEND

- FLEXIBLE DRUMS (CHANNELIZING) SPACED @ 30' +/- IN TAPERS AND 60'+/- IN TANGENTS
- PORTABLE BARRIER RAIL WITH RAIL DELINEATORS @ 20 +/-
- TRAFFIC SIGNAL SYSTEM
- SIGN
- TDSYL TEMPORARY DOUBLE SOLID YELLOW LINE
- TSSWL TEMPORARY SINGLE SOLID WHITE LINE
- REMOVABLE STOP LINE
- DETECTOR LOOP
- ATTENUATOR
- DENOTES : WORK ZONE
- DENOTES : DIRECTION OF TRAVEL
- A DENOTES : TYPE "A" WARNING LIGHTS REQUIRED

JOHN C. PRICE
REGISTERED ENGINEER
AGRICULTURE
NO. 17394
STATE OF TENNESSEE
6-18-14

STATE OF TENNESSEE
DEPARTMENT OF TRANSPORTATION

TRAFFIC CONTROL PLAN

BR. NO. 18-SR001-06.36

TENNESSEE D.O.T.	DESIGN DIVISION	FILE NO.

TYPE	YEAR	PROJECT NO.	SHEET NO.
CONST.	2014	18002-4230-04	2D

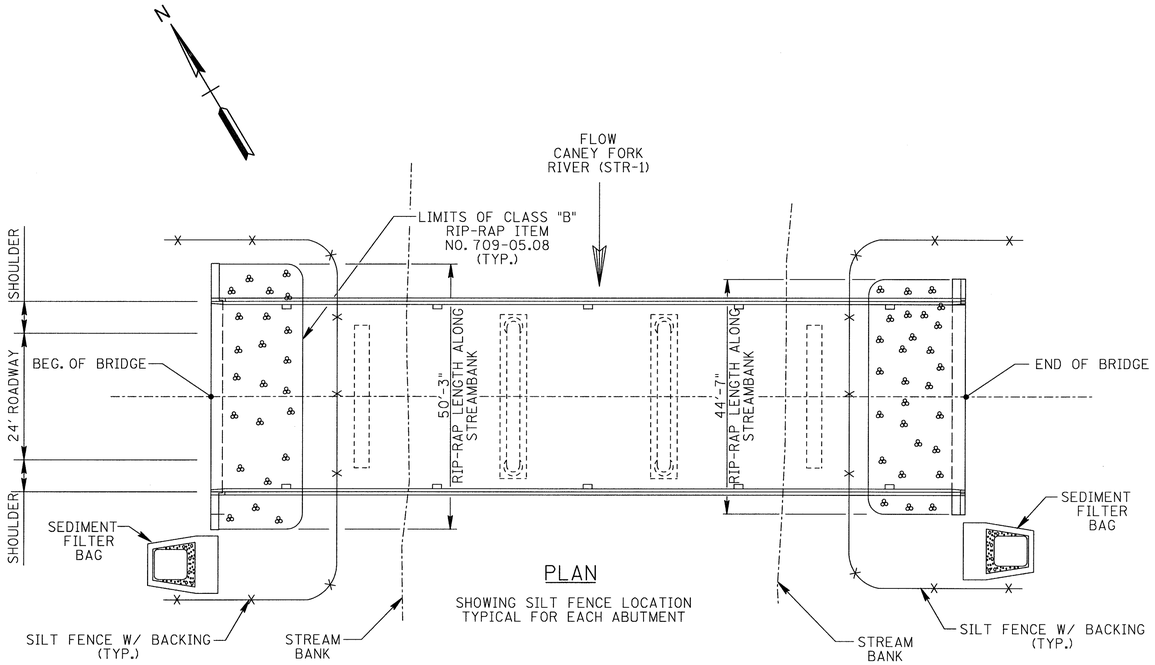

PLAN

SHOWING SILT FENCE LOCATION TYPICAL FOR EACH ABUTMENT

EROSION PREVENTION AND SEDIMENT CONTROL NOTES

1. INSPECTION, REPAIR, AND MAINTENANCE OF EPSC MEASURES/STRUCTURES IS TO BE PERFORMED ON A REGULAR BASIS. SEDIMENT SHALL BE REMOVED FROM SEDIMENT CONTROL STRUCTURES WHEN THE DESIGN CAPACITY HAS BEEN REDUCED BY FIFTY PERCENT (50%). DURING SEDIMENT REMOVAL, THE CONTRACTOR SHALL TAKE CARE TO ENSURE THAT STRUCTURAL COMPONENTS OF EPSC MEASURES ARE NOT DAMAGED AND THUS MADE INEFFECTIVE. IF DAMAGE DOES OCCUR, THE CONTRACTOR SHALL REPAIR THE STRUCTURES AT THE CONTRACTOR'S OWN EXPENSE.

2. SEDIMENT REMOVED FROM SEDIMENT CONTROL STRUCTURES SHALL BE PLACED AND BE TREATED IN A MANNER SO THAT THE SEDIMENT IS CONTAINED WITHIN THE PROJECT LIMITS AND DOES NOT MIGRATE INTO WATERS OF THE STATE/U.S. COST FOR THIS TREATMENT IS TO BE INCLUDED IN PRICE BID FOR ITEM NO. 209-05 SEDIMENT REMOVAL, C.Y.

3. THE CONTRACTOR SHALL INSTALL A RAIN GAUGE EVERY LINEAR MILE AT ALL SITES WHERE CLEARING, GRUBBING, EXCAVATION, GRADING, CUTTING OR FILLING IS BEING ACTIVELY PERFORMED, OR EXPOSED SOIL HAS NOT YET BEEN PERMANENTLY STABILIZED. IF THE PROJECT LENGTH IS LESS THAN ONE LINEAR MILE, ONE RAIN GAUGE SHALL BE INSTALLED AT THE CENTER OF THE PROJECT OR AS INDICATED BY THE TDOT EPSC INSPECTOR. THE CONTRACTOR SHALL ENSURE THAT EACH GAUGE IS MAINTAINED IN GOOD WORKING CONDITION. TDOT AND/OR THE CONTRACTOR SHALL RECORD DAILY PRECIPITATION AND FORECASTED PERCENTAGE OF PRECIPITATION IN DETAILED RECORDS OF RAINFALL EVENTS INCLUDING DATES, AMOUNTS OR RAINFALL PER GAUGE, THE ESTIMATED DURATION (OR STARTING AND ENDING TIMES), AND FORECASTED PERCENTAGE OF PRECIPITATION FOR THE PROJECT. THIS INFORMATION SHALL BE PROVIDED TO THE ENGINEER ON A MONTHLY BASIS. THE COST FOR THE RAIN GAUGES IS TO BE INCLUDED IN THE UNIT BID PRICES FOR OTHER ITEMS. RAIN GAUGES SHALL BE AS SPECIFIED IN THE APPROVED TDOT RAINFALL MONITORING PLAN.

4. INSPECTION OF EPSC MEASURES SHALL BE DONE AT LEAST TWICE PER CALENDAR WEEK AT LEAST 72 HOURS APART. A CALENDAR WEEK IS DEFINED AS SUNDAY THROUGH SATURDAY.

5. OUTFALL POINTS SHALL BE INSPECTED TO ASCERTAIN WHETHER EPSC MEASURES ARE EFFECTIVE IN PREVENTING SIGNIFICANT IMPACTS TO SURROUDING WATERS. WHERE DISCHARGE LOCATIONS ARE INACCESSIBLE, NEARBY DOWNSTREAM LOCATIONS SHALL BE INSPECTED. LOCATIONS WHERE VEHICLES ENTER AND EXIT THE SITE SHALL BE INSPECTED FOR EVIDENCE OF OFF-SITE ROADWAY SEDIMENT TRACKING.

6. UPON CONCLUSION OF THE INSPECTIONS, EPSC MEASURES FOUND TO BE INEFFECTIVE SHALL BE REPAIRED, REPLACED OR MODIFIED BEFORE THE NEXT RAIN EVENT, IF POSSIBLE, BUT IN NO CASE MORE THAN 24 HOURS AFTER THE INSPECTION OR WHEN THE CONDITION IS IDENTIFIED. IF THE REPAIR, REPLACEMENT OR MODIFICATION IS NOT PRACTICAL WITHIN THE TIMEFRAME, WRITTEN DOCUMENTATION MUST BE PROVIDED IN THE FIELD BOOK AND AN ESTIMATED REPAIR, REPLACEMENT OR MODIFICATION SCHEDULE SHALL BE DOCUMENTED WITHIN 24 HOURS AFTER IDENTIFICATION.

7. THE CONTRACTOR SHALL ESTABLISH AND MAINTAIN A PROACTIVE METHOD TO PREVENT LITTER, CONSTRUCTION DEBRIS, AND CONSTRUCTION WASTES FROM ENTERING WATERS OF THE STATE/U.S.

8. THE CONTRACTOR SHALL TAKE APPROPRIATE STEPS TO ENSURE THAT PETROLEUM PRODUCTS OR OTHER CHEMICAL POLLUTANTS ARE PREVENTED FROM ENTERING WATERS OF THE STATE/U.S. ALL EQUIPMENT REFUELING, SERVICING, AND STAGING AREAS SHALL COMPLY WITH ALL LOCAL, STATE, AND FEDERAL LAWS, RULES, REGULATIONS, AND ORDINANCES, INCLUDING THOSE OF THE NATIONAL FIRE PROTECTION ASSOCIATION (NFPA). APPROPRIATE CONTAINMENT MEASURES FOR THESE AREAS SHALL BE USED. ALL SPILLS MUST BE REPORTED TO THE APPROPRIATE AGENCY, AND MEASURES SHALL BE TAKEN IMMEDIATELY TO PREVENT THE POLLUTION OF WATERS OF THE STATE/U.S., INCLUDING GROUNDWATER, SHOULD A SPILL OCCUR.

SPECIAL ENVIRONMENTAL NOTES

A. NO DISTURBANCE OF CLIFF AND BARN SWALLOW NESTS, EGGS, OR BIRDS (YOUNG OR ADULTS) IS PERMITTED DURING APRIL 15 THROUGH JULY 31. NEST REMOVAL OR DESTRUCTION AND THE IMPLEMENTATION OF MEASURES PREVENTING FUTURE NEST BUILDING (E.G., OBSTRUCTING A STRUCTURE USING NETTING) ARE PERMITTED DURING AUGUST 1 THROUGH APRIL 14.

EXCEPTIONS ARE AS FOLLOWS:
1. TDOT MAY REMOVE OR DESTROY NESTS AND PREVENT NEST BUILDING PROVIDED NO EGGS ARE PRESENT PRIOR TO APRIL 15. ABSENCE OF EGGS MUST BE DOCUMENTED USING APPROPRIATE MEANS FOR DETERMINATION, INCLUDING SITE VISITS AND PHOTOGRAPHS.
2. TDOT MAY REMOVE OR DESTROY NESTS PROVIDED NO BIRDS (YOUNG OR ADULTS) ARE PRESENT IN ANY NESTS PRIOR TO JULY 31. ABSENCE OF BIRDS MUST BE DOCUMENTED USING APPROPRIATE MEANS FOR DETERMINATION, INCLUDING SITE VISISTS, PHOTOGRAPHS, AND OBSERVATIONS OF NO BIRDS USING NESTS.

B. ALL WASH WATER, RINSATE, DEBRIS, AND PAINT WILL BE CONTAINED AND PROPERLY DISPOSED. NO DUST, SPRAY, OR PAINT MAY ENTER THE STREAM.

C. ANY IN-STREAM WORK WILL REQUIRE NOTIFICATION TO TDOT ECOLOGY TO PERFORM A CRAYFISH SURVEY. NOTIFICATION SHOULD BE RECEIVED AT LEAST ONE (1) WEEK PRIOR TO IN-STREAM WORK. PLEASE CALL EITHER ROB HOWARD AT 615-253-8690 OR DEEDEE KATHMAN AT 615-253-6524.

D. VEGETATION REMOVAL: IF NOTICED DURING VEGETATION REMOVAL, ANY TREES GREATER THAN 5 INCHES IN DIAMETER ARE REQUIRED TO BE REMOVED, CONTACT THE TDOT ENVIRONMENTAL DIVISION ECOLOGY SECTION IMMEDIATELY. DUE TO THE RECENT MODIFICATION OF THE USFWS STANCE REGARDING THE INDIANA BAT NO TREES > 5" DBH SHOULD BE CUT WITHOUT CLEARANCE FROM THE TDOT ENVIRONMENTAL DIVISION ECOLOGY SECTION.

UNOFFICIAL SET

NOT FOR BIDDING

JOHN C. PRICE
REGISTERED ENGINEER
AGRICULTURE
17334
STATE OF TENNESSEE
6-17-14

STATE OF TENNESSEE
DEPARTMENT OF TRANSPORTATION

EROSION CONTROL DETAILS & NOTES

BR. NO.16-SR001-06.36

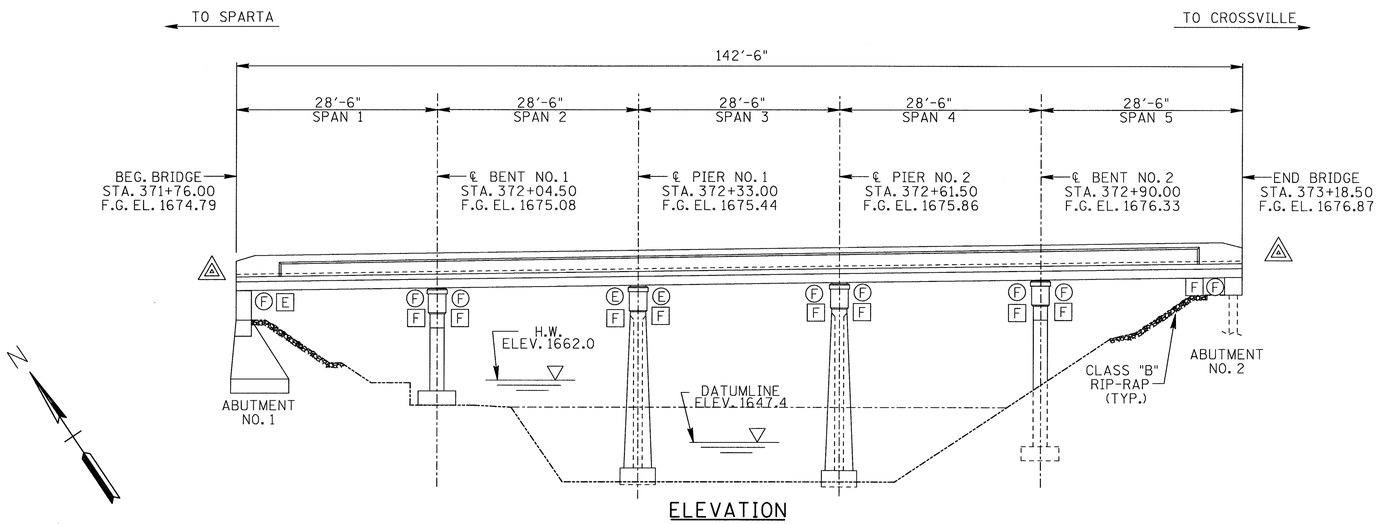

ELEVATION

:PROVIDE GUARDRAIL ATTACHMENT TO PARAPET IN ACCORDANCE WITH TDOT STD. DWG. S-GRC-1.

E: DENOTES EXPANSION SUPPORT
F: DENOTES FIXED SUPPORT

○ : DENOTES EXISTING SUPPORT CONDITION
□ : DENOTES PROPOSED SUPPORT CONDITION

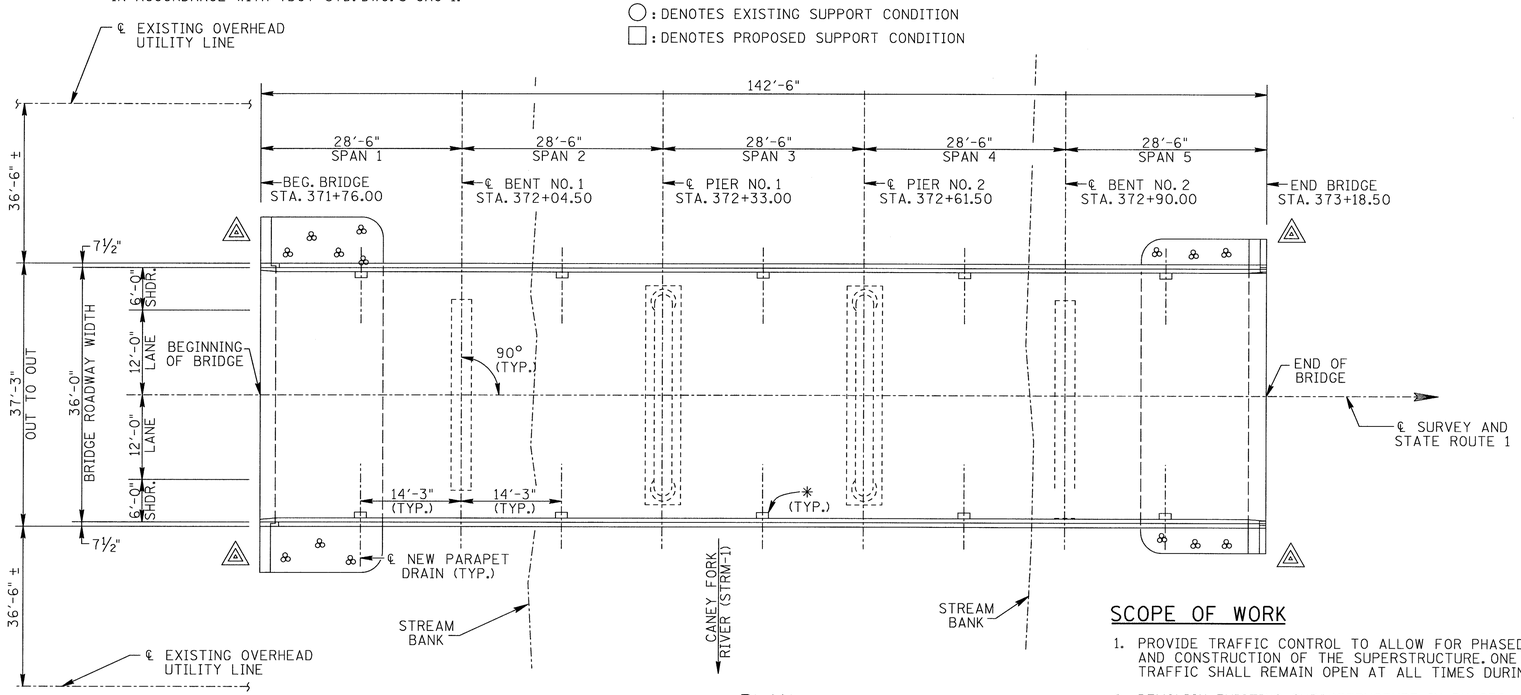

PLAN

*: DENOTES NEW PARAPET DRAINS REQUIRED. FOR DETAILS SEE DWG. NO. STD-1-2SS.

LIST OF BRIDGE DRAWINGS

DWG. NO.	REV.	DESCRIPTION
BR-116-51		LAYOUT OF BRIDGE TO BE REPAIRED
BR-116-52		BRIDGE GENERAL NOTES AND EST. QUANTITIES
BR-116-53		PHASED CONSTRUCTION DETAILS
BR-116-54		SUPERSTRUCTURE
BR-116-55		SLAB PLAN & DETAILS
BR-116-56		FRAMING PLAN & DETAILS
BR-116-57		PRESTRESSED BOX BEAMS
BR-116-58		ABUTMENT DETAILS
BR-116-59		BENTS
BR-116-60		PIERS
BR-116-61		BENT AND PIER DETAILS
BR-116-62		SUBSTRUCTURE REPAIRS
BR-116-63		EMBANKMENT REPAIR
BR-116-64		BILL OF STEEL

PROJECT NO.	YEAR	SHEET NO.
18002-4230-04	2014	

REVISIONS

NO.	DATE	BY	BRIEF DESCRIPTION

LIST OF REFERENCE DRAWINGS

(TO BE PRINTED WITH PLANS)

DWG. NO.	DESCRIPTION
F-12-94	LAYOUT OF BRIDGE
F-2-65	ABUTMENT AND BENT
F-2-113	CONCRETE ABUTMENT
F-10-6	CONCRETE BRIDGE
F-10-14	CONCRETE PIERS
C-4-143	CONCRETE BENTS
BR-10-91	PIER AND ABUTMENT DETAILS

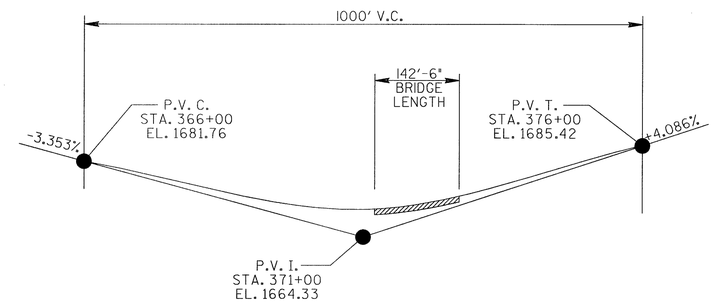

GRADE SKETCH

NOTE: CONTRACTOR TO FIELD VERIFY THAT EXISTING SUBSTRUCTURE ELEVATIONS ARE IN CONFORMANCE WITH EXISTING PLANS PRIOR TO START OF CONSTRUCTION (UTILIZING THE TEMPORARY BENCH MARK AS DESCRIBED BELOW). NOTIFY THE ENGINEER IF ELEVATIONS ARE NOT WITHIN 0.04 FT OF EXISTING PLANS ELEVATIONS.
NOTE: TEMPORARY BENCH MARK (T.B.M.) FOR BRIDGE CONSTRUCTION TO BE TOP OF CAP AT ABUTMENT NO 1, ELEVATION 1671.79.
NOTE: THE TEMPORARY BENCH MARK AS DESCRIBED SHALL BE USED IN LIEU OF ACTUAL U.S.G.S ELEVATIONS.

UNOFFICIAL SET

NOT FOR BIDDING

SCOPE OF WORK

1. PROVIDE TRAFFIC CONTROL TO ALLOW FOR PHASED DEMOLITION AND CONSTRUCTION OF THE SUPERSTRUCTURE. ONE LANE OF TRAFFIC SHALL REMAIN OPEN AT ALL TIMES DURING CONSTRUCTION.
2. DEMOLISH EXISTING SUPERSTRUCTURE IN PHASES.
3. PERFORM EMBANKMENT REPAIRS AND PLACE RIP-RAP AT ABUTMENTS WITH SUPERSTRUCTURE REMOVED IN EACH PHASE.
4. CONSTRUCT ABUTMENT, PIER, AND BENT MODIFICATIONS AS NECESSARY TO ACCOMODATE THE NEW SUPERSTRUCTURE.
5. CONSTRUCT SUBSTRUCTURE SPALL REPAIRS IN EACH PHASE.
6. CONSTRUCT THE NEW PRECAST CONCRETE BOX BEAM SUPERSTRUCTURE, NEW APPROACH GUARDRAIL, ASHPALT TRANSITIONS, AND ROADWAY STRIPING.
7. APPLY TEXTURE COAT FINISH TO EXPOSED BRIDGE SURFACES.
8. REMOVE ALL DEBRIS AND RELATED TRASH AT PIER NO. 1 AND PIER NO. 2.

STATE OF TENNESSEE
DEPARTMENT OF TRANSPORTATION
BUREAU OF HIGHWAYS

LAYOUT OF BRIDGE TO BE REPAIRED
STATE ROUTE 1
OVER
CANEY FORK RIVER
BRIDGE NO. 18-SR001-06.36
CUMBERLAND COUNTY
2014

DESIGNED BY	WAP	DATE	AUGUST 2013
DRAWN BY	MP	DATE	AUGUST 2013
SUPERVISED BY	WAP	DATE	AUGUST 2013
CHECKED BY	WAP	DATE	AUGUST 2013

PROJECT NO.	YEAR	SHEET NO.
18002-4230-04	2014	

REVISIONS

NO.	DATE	BY	BRIEF DESCRIPTION

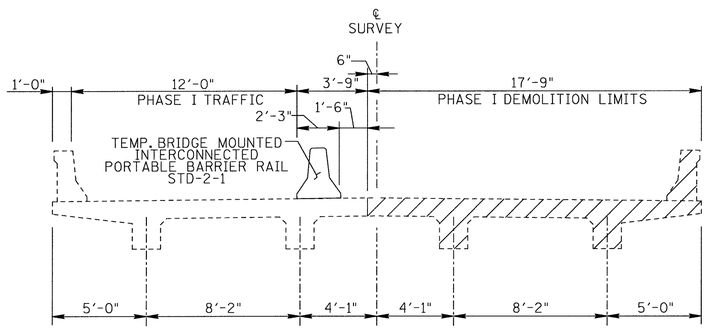

PHASE I TRAFFIC CONTROL & DEMOLITION

LOOKING FORWARD

DENOTES AREAS OF CONCRETE DECK, CURB & RAILING REMOVAL

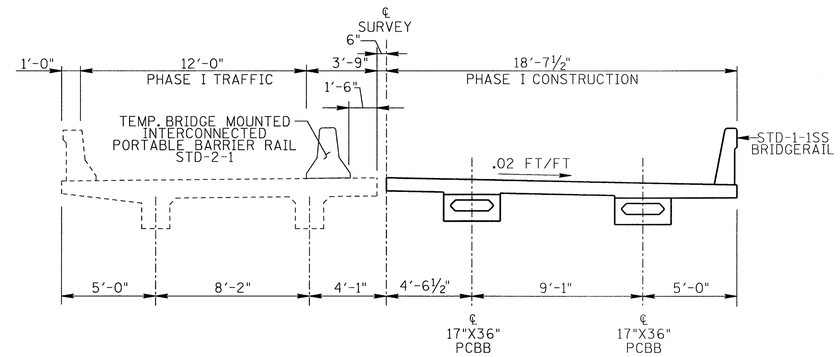

PHASE I CONSTRUCTION

LOOKING FORWARD

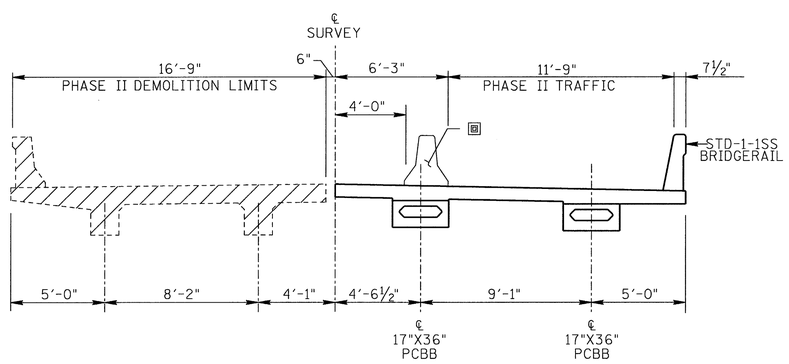

PHASE II TRAFFIC CONTROL & DEMOLITION

LOOKING FORWARD

DENOTES AREAS OF CONCRETE DECK, CURB & RAILING REMOVAL

TEMP. BRIDGE MOUNTED INTERCONNECTED PORTABLE BARRIER RAIL STD-2-1 WITHOUT ANCHOR BOLTS ATTACHED TO NEW DECK

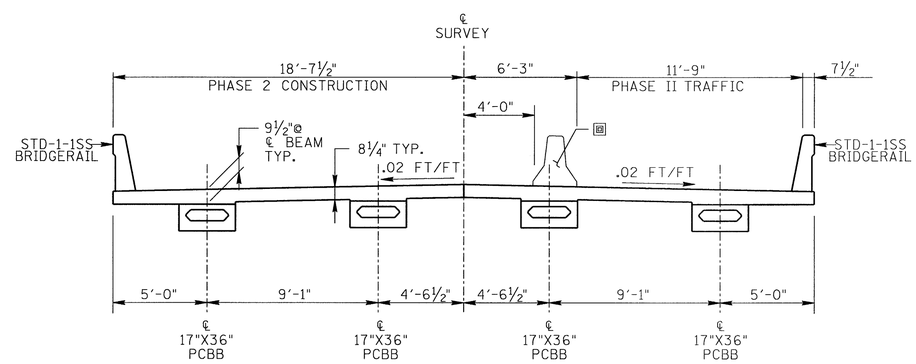

PHASE II CONSTRUCTION

LOOKING FORWARD

UNOFFICIAL SET

NOT FOR BIDDING

STATE OF TENNESSEE
DEPARTMENT OF TRANSPORTATION
BUREAU OF HIGHWAYS

PHASED CONSTRUCTION DETAILS
STATE ROUTE 1
OVER
CANEY FORK RIVER
BRIDGE NO. 18-SR001-6.36
CUMBERLAND COUNTY
2014

DESIGNED BY	WAP	DATE	AUGUST 2013
DRAWN BY	MP	DATE	AUGUST 2013
SUPERVISED BY	WAP	DATE	AUGUST 2013
CHECKED BY	WAP	DATE	AUGUST 2013

BR-116-53

PROJECT NO.	YEAR	SHEET NO.
18002-4230-04	2014	

REVISIONS

NO.	DATE	BY	BRIEF DESCRIPTION

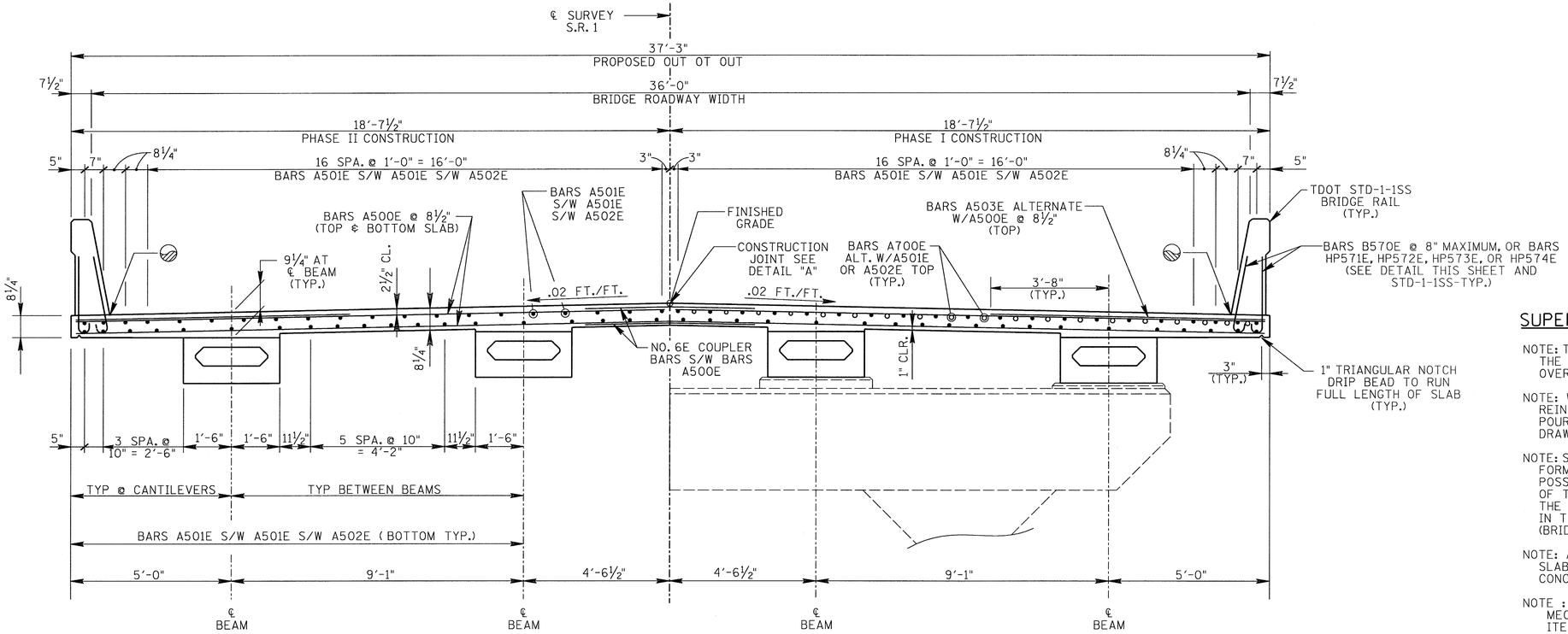

HALF SECTION @ MID-SPAN

HALF SECTION @ SUPPORT

TYPICAL CROSS SECTION

SUPERSTRUCTURE NOTES:

NOTE: THE CONTRACTOR IS SOLELY RESPONSIBLE FOR SUPPORTING THE BEAMS TO PREVENT DAMAGE DUE TO TWISTING OR OVERTURNING DURING ALL PHASES OF CONSTRUCTION.

NOTE: WHEN POURING SLAB, PROVISIONS SHALL BE MADE FOR SETTING REINFORCING STEEL FOR PARAPET. THE PARAPET SHALL NOT BE POURED UNTIL THE SLAB IS POURED AND CURED. SEE STANDARD DRAWING NO. STD-1-1SS FOR PARAPET.

NOTE: SUPPORT DIAPHRAGMS AT THE PIERS AND BENTS SHALL BE FORMED AND THE BOTTOM 15 INCHES POURED AS SOON AS POSSIBLE AFTER THE BEAMS HAVE BEEN SET. THE REMAINDER OF THE DIAPHRAGM SHALL BE POURED CONCURRENTLY WITH THE DECK SLAB. ALL DIAPHRAGM CONCRETE SHALL BE INCLUDED IN THE QUANTITY FOR ITEM NO. 604-03.09, CLASS "D" CONCRETE (BRIDGE DECK), C.Y.

NOTE: ALL COSTS ASSOCIATED WITH THE NEW 8¼" CONCRETE DECK SLAB SHALL BE PAID FOR UNDER ITEM NO. 604-03.09, CLASS "D" CONCRETE (BRIDGE DECK), CY.

NOTE : COST OF EPOXY COATED REINFORCING STEEL INCLUDING MECHANICAL THREADED CONNECTORS SHALL BE PAID FOR UNDER ITEM NO. 604-02.03, EPOXY COATED REINFORCING STEEL , LB. SEE BILL OF STEEL AND BAR BENDS ON DWG NO. BR-116-64.

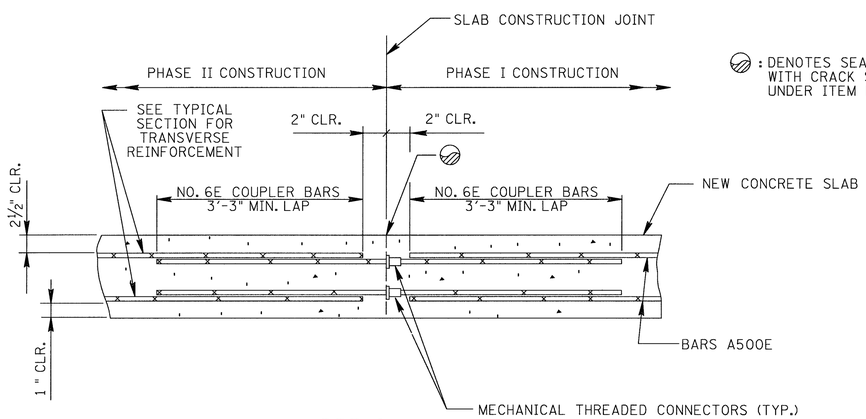

: DENOTES SEAL CONSTRUCTION JOINTS WITH CRACK SEALER TO BE PAID FOR UNDER ITEM NOS. 617-02 AND 617-05

DETAIL "A"

SHOWING TRANSVERSE REINFORCING STEEL SPLICING WITH MECHANICAL THREADED CONNECTORS

NOTE: COST OF MECHANICAL THREADED CONNECTORS AND NO. 6 COUPLER BARS WITHIN THE NEW CONCRETE SLAB SHALL BE PAID FOR UNDER ITEM NO. 604-02.03, EPOXY COATED REINFORCING STEEL.

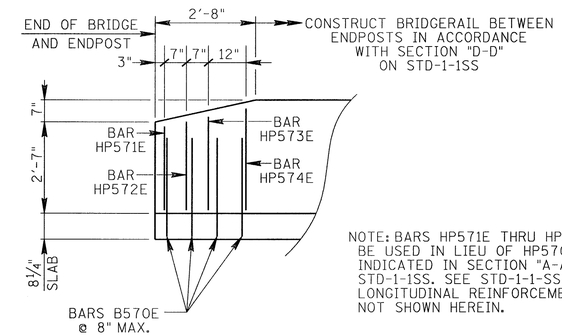

NOTE: BARS HP571E THRU HP574E TO BE USED IN LIEU OF HP570E'S AS INDICATED IN SECTION "A-A" ON STD-1-1SS. SEE STD-1-1-SS FOR LONGITUDINAL REINFORCEMENT NOT SHOWN HEREIN.

BRIDGE RAIL DETAIL @ ENDS OF BRIDGE

SHOWING ADAPTATIONS TO STD-1-1SS AT ENDPOSTS

UNOFFICIAL SET

NOT FOR BIDDING

ESTIMATED QUANTITIES

ITEM NO. 604-03.09	ITEM NO. 604-02.03	ITEM NO. 604-03.02
CLASS "D" CONCRETE C.Y.	EPOXY COATED REINFORCING STEEL LBS.	STEEL BAR REINFORCEMENT (BRIDGES) LBS.
154	44,530	1,056

STATE OF TENNESSEE
DEPARTMENT OF TRANSPORTATION
BUREAU OF HIGHWAYS

SUPERSTRUCTURE
STATE ROUTE 1
OVER
CANEY FORK RIVER
BRIDGE NO. 18-SR001-06.36
CUMBERLAND COUNTY
2014

DESIGNED BY	WAP	DATE	AUGUST 2013
DRAWN BY	MP	DATE	AUGUST 2013
SUPERVISED BY	WAP	DATE	AUGUST 2013
CHECKED BY	WAP	DATE	AUGUST 2013

BR-116-54

PROJECT NO.	YEAR	SHEET NO.
18002-4230-04	2014	

REVISIONS

NO.	DATE	BY	BRIEF DESCRIPTION

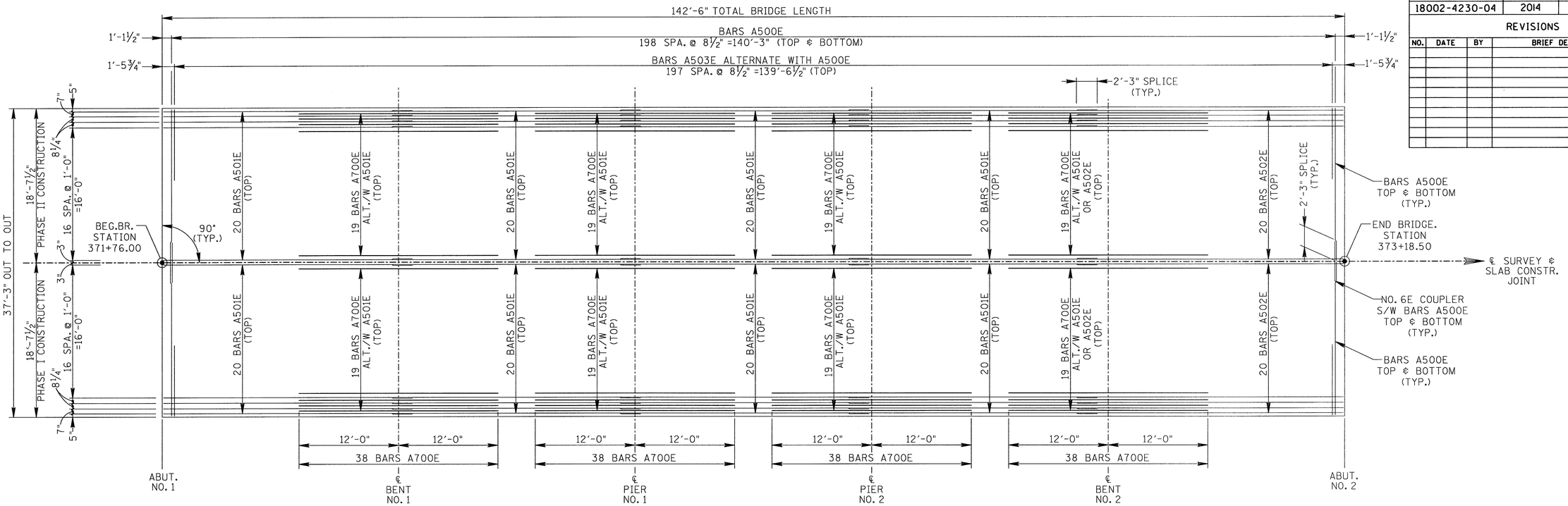

SLAB PLAN

SHOWING REINFORCEMENT

NOTE: SEE SUPERSTRUCTURE CROSS SECTION FOR BOTTOM OF SLAB LONGITUDINAL BARS.

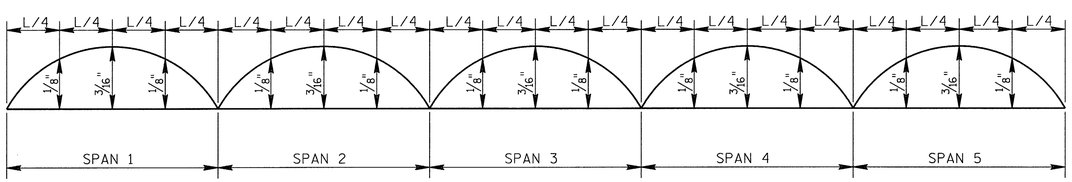

DEAD LOAD CORRECTION CURVE

DEAD LOAD CORRECTION CURVE: THIS CURVE IS FOR DEAD LOAD SLAB AND ALL DEAD LOADS THAT ARE APPLIED AFTER SLAB IS IN PLACE AND SHOULD BE CORRECTED TO COMPENSATE FOR EFFECTS DUE TO VERTICAL CURVE. IF PRESTRESSED DECK PANELS ARE USED AND THE BEAMS ARE PROFILED AFTER PANELS ARE IN PLACE, REDUCE THE DEAD LOAD CORRECTION VALUES SHOWN BY 25%.

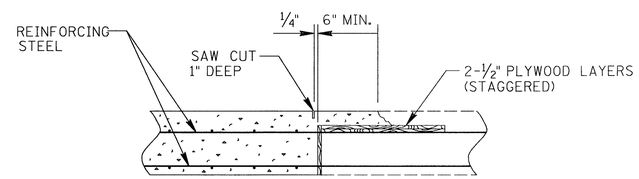

SLAB CONSTRUCTION JOINT DETAIL

NOTE: SLAB CONSTRUCTION JOINTS MAY BE LOCATED AT THE CONTRACTOR'S OPTION EXCEPT NO JOINT MAY BE LOCATED CLOSER THAN 1/5 SPAN LENGTH FROM AN INTERIOR SUPPORT. THE CONTRACTOR SHALL MAKE ADEQUATE PROVISIONS DURING PLACEMENT OF SLAB TO PREVENT THE EXTERIOR BEAM FROM TWISTING. NO EQUIPMENT SHALL BE PERMITTED ON THE BRIDGE UNTIL ALL POURS ARE MADE AND THE CONCRETE IS PROPERLY CURED. ALL SLAB CONSTRUCTION JOINTS SHALL BE IN ACCORDANCE WITH THE SLAB CONSTRUCTION JOINT DETAIL SHOWN ABOVE.

UNOFFICIAL SET

NOT FOR BIDDING

STATE OF TENNESSEE
DEPARTMENT OF TRANSPORTATION
BUREAU OF HIGHWAYS

SLAB PLAN AND DETAILS
STATE ROUTE 1
OVER
CANEY FORK RIVER
BRIDGE NO. 18-SR001-06.36
CUMBERLAND COUNTY
2014

DESIGNED BY	WAP	DATE	AUGUST 2013
DRAWN BY	MP	DATE	AUGUST 2013
SUPERVISED BY	WAP	DATE	AUGUST 2013
CHECKED BY	WAP	DATE	AUGUST 2013

BR-116-55

PROJECT NO.	YEAR	SHEET NO.
18002-4230-04	2014	

REVISIONS

NO.	DATE	BY	BRIEF DESCRIPTION

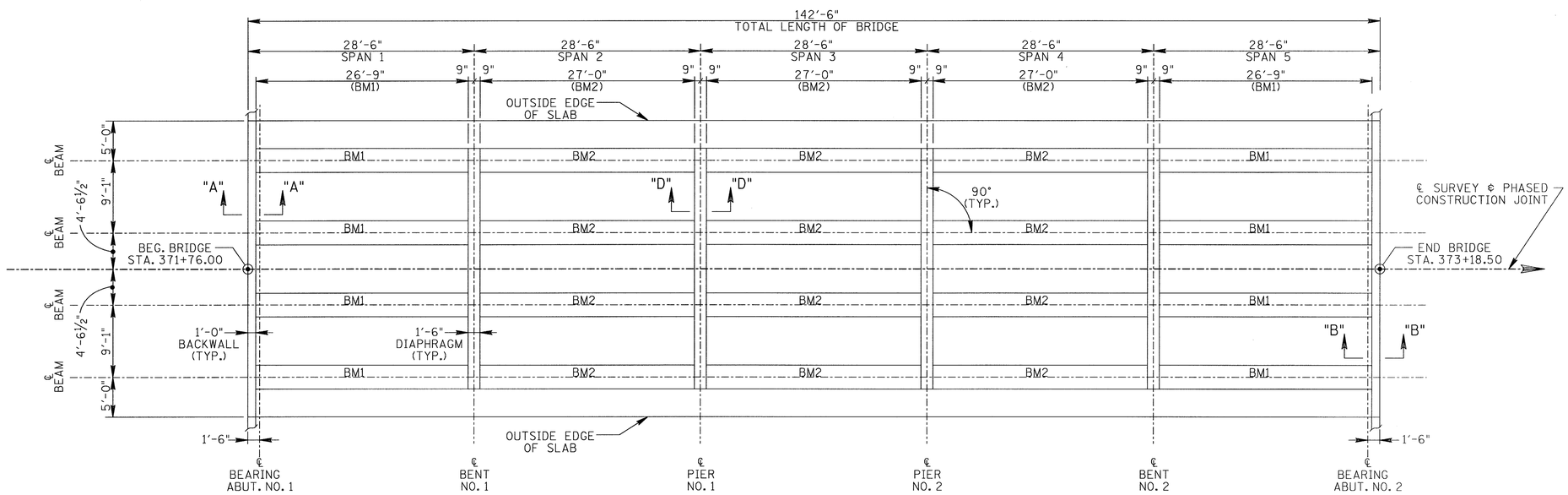

FRAMING PLAN

NOTE: SEE SHEET NO. BR-116-58 FOR SECTION "A-A" AND SECTION "B-B"

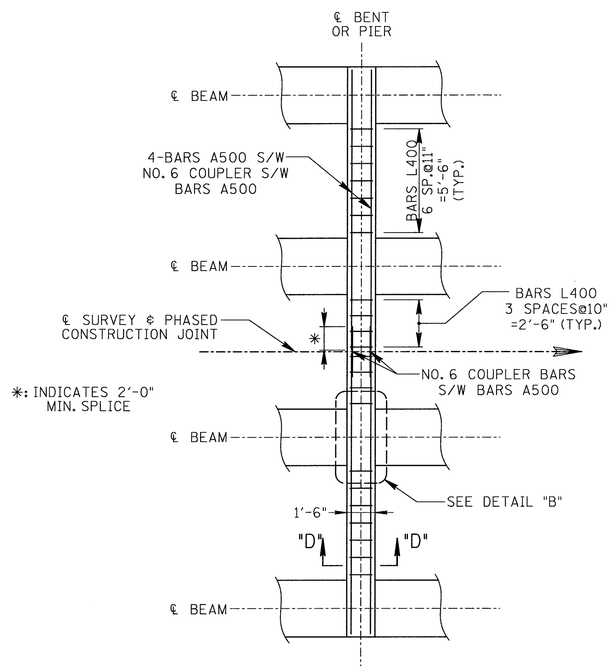

DIAPHRAGM @ PIER OR BENT

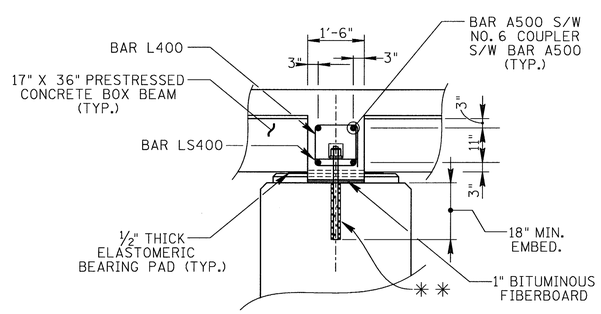

SECTION "D-D"

* *: FOR ANCHOR BOLTS IN DIAPHRAGMS, WHEN ANCHOR BOLT IS LOCATED AWAY FROM BENT AND PIER CANTILEVERS, USE 1" DIA. SWEDGED ANCHOR BOLTS IN LIEU OF THE HOOKED ANCHOR BOLTS AS INDICATED ON STD-6-1. DRILL HOLE ⅛" DIAMETER LARGER THAN BOLT, AND ANCHOR WITH APPROVED EPOXY ADHESIVE FROM THE CURRENT STATE OF TENNESSEE QUALIFIED PRODUCTS LIST. ALL OTHER DETAILS TO BE IN ACCORDANCE WITH STD-6-1. REQUIRED ANCHOR BOLT LENGTH FOR DRILLED IN ANCHORS= 2'-6".
IN CANTILEVER AREAS OF BENTS AND PIERS, USE HOOKED ANCHOR BOLTS IN ACCORDANCE WITH DETAILS ON STD-6-1.
SEE SHEET NOS. BR-116-59 AND BR-116-60 FOR SPECIFIC LOCATIONS OF HOOKED AND DRILLED-IN ANCHOR BOLTS.

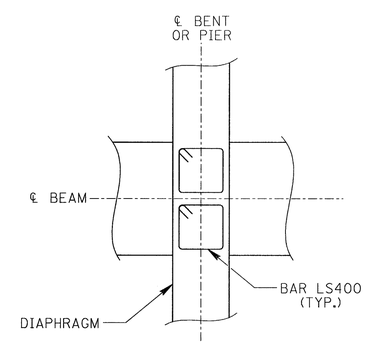

DETAIL "B"

SHOWING BARS LS400

UNOFFICIAL SET

NOT FOR BIDDING

STATE OF TENNESSEE
DEPARTMENT OF TRANSPORTATION
BUREAU OF HIGHWAYS

FRAMING PLAN AND DETAILS
STATE ROUTE 1
OVER
CANEY FORK RIVER
BRIDGE NO. 18-SR001-06.36
CUMBERLAND COUNTY
2014

DESIGNED BY	WAP	DATE	AUGUST 2013
DRAWN BY	WAP/TRC	DATE	AUGUST 2013
SUPERVISED BY	WAP	DATE	AUGUST 2013
CHECKED BY	WAP	DATE	AUGUST 2013

OVERHANG BRACKETS: THE HANGER ASSEMBLY SELECTED BY THE CONTRACTOR MUST BE APPROVED BY THE ENGINEER OF STRUCTURES BEFORE THE HANGER ASSEMBLY CAN BE INSTALLED AND THE PRE-STRESSED BEAM SHOP DRAWINGS APPROVED. IT IS SOLELY THE CONTRACTOR'S RESPONSIBLITY TO ENSURE THE OVERHANG FORMWORK, BRACKETS, AND CONNECTIONS ARE BOTH STRUCTURALLY AND FUNCTIONALLY ADEQUATE AND COMPLIANT WITH THE AASHTO BRIDGE CONSTRUCTION SPECIFICATION REQUIREMENTS.

PROJECT NO.	YEAR	SHEET NO.
18002-4230-04	2014	

REVISIONS

NO.	DATE	BY	BRIEF DESCRIPTION

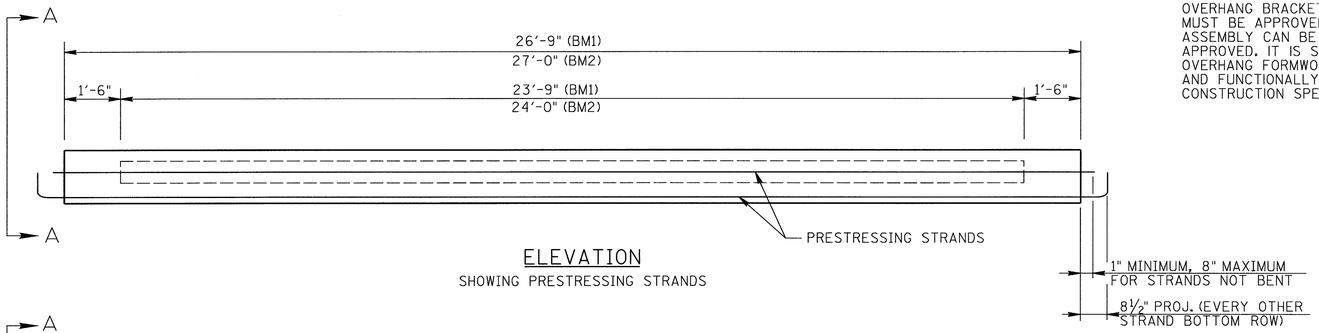

ELEVATION
SHOWING PRESTRESSING STRANDS

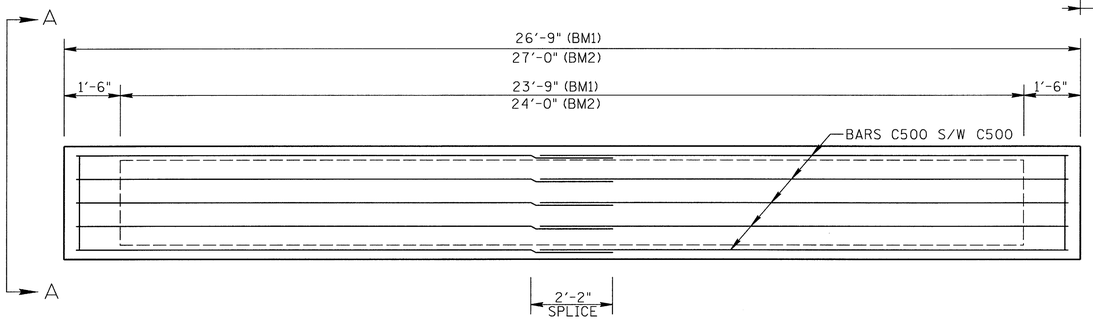

PLAN

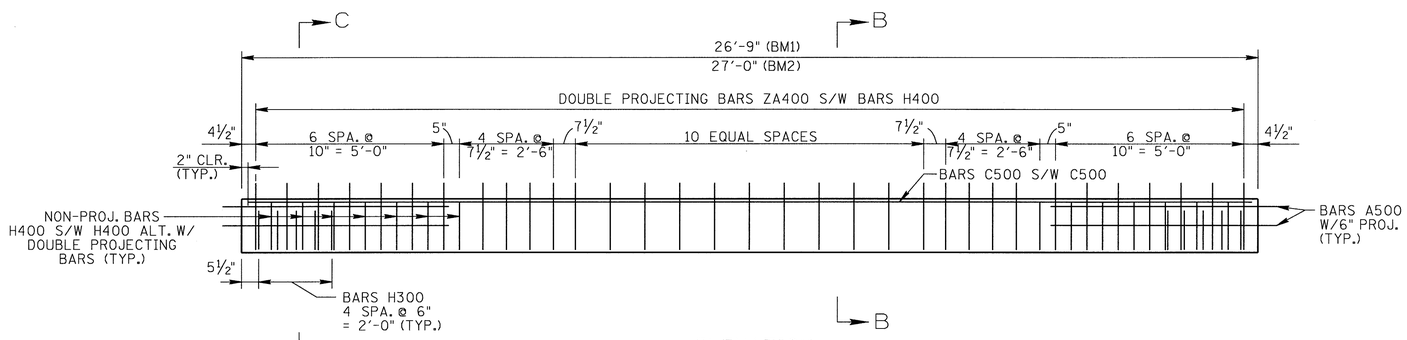

ELEVATION
SHOWING REINFORCEMENT

BEAM NOTES:

NOTE: SEE STD-14-3 FOR BOX BEAM STANDARD DETAILS, NOTES AND REINFORCING.
THE CONCRETE FOR THIS CONSTRUCTION SHALL BE OF SUCH PROPERTIES AS TO ATTAIN A COMPRESSIVE STRENGTH OF NOT LESS THAN 6,000 P.S.I. AT THE AGE OF 28 DAYS AND STRESS TRANSFER SHALL NOT BE MADE TO THE BRIDGE MEMBER UNTIL THE TEST SPECIMENS INDICATE THAT THE CONCRETE HAS REACHED A COMPRESSIVE STRENGTH OF AT LEAST 5,000 PSI. SEE GENERAL NOTES FOR CONCRETE FINISHING NOTE.
ALL BEAMS ARE 17"X36" PRESTRESSED BOX BEAMS.
ALL PRESTRESSING STRANDS TO BE ½" DIA. ASTM GRADE 270K, 7 WIRE UNCOATED STRESS RELIEVED LOW RELAXATION PRESTRESSING STRANDS.
AN INITIAL FORCE OF 31,003 LBS. SHALL BE APPLIED TO EACH STRAND IN ALL BEAMS. A=0.153 IN2 PER STRAND.
PRESTRESSED BEAM DESIGN DATA - PER BEAM

LIVE LOAD DISTRIBUTION FACTORS:
LLDF MOMENT=1.002 TRUCK/BEAM
LLDF SHEAR=1.002 TRUCK/BEAM
COMPOSITE DEAD LOADS:
DC=188 LBS/FT PER BEAM
DW=305 LBS/FT PER BEAM
COMPOSITE SLAB DESIGN STRENGTH:
f'c=4000 P.S.I.

NOTE: DOWNWARD DEFLECTION UNDER TOTAL DL IS NOT ALLOWED.

BILL OF STEEL

(PER BEAM BM1)

BAR	SIZE	NO. REQ'D.	LENGTH
A500	5	8	5'-6"
A501	5	6	2'-8"
A502	5	8	1'-1"
C500	5	10	15'-4"
H300	3	10	4'-7½"
H400	4	61	4'-9½"
ZA400	4	66	3'-8½"

(PER BEAM BM2)

BAR	SIZE	NO. REQ'D.	LENGTH
A500	5	8	5'-6"
A501	5	6	2'-8"
A502	5	8	1'-1"
C500	5	10	15'-6"
H300	3	10	4'-7½"
H400	4	61	4'-9½"
ZA400	4	66	3'-8½"

UNOFFICIAL SET

NOT FOR BIDDING

ESTIMATED QUANTITIES PER BEAM

ITEM	NO. REQ'D.	CLASS 'A' CONCRETE C.Y.	STEEL BAR REINFORCING LB.	PRESTRESSING STRANDS (LOW RELAXATION) LB.
BM1	8	3.2	608	182
BM2	12	3.2	608	184

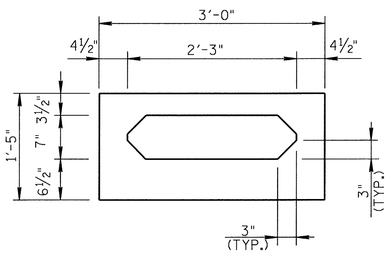

TYPICAL SECTION
(SHOWING DIMENSIONS)

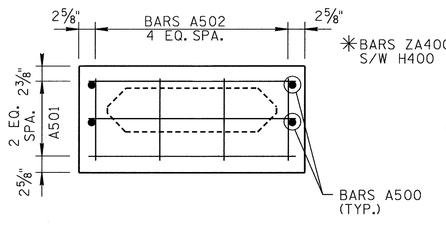

SECTION A-A
(SHOWING END REINFORCEMENT)

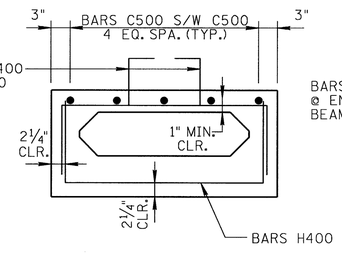

SECTION B-B
(SHOWN @ PROJECTED STIRRUPS)
✳: BARS H400 S/W H400 @ NON-PROJ. STIRRUPS

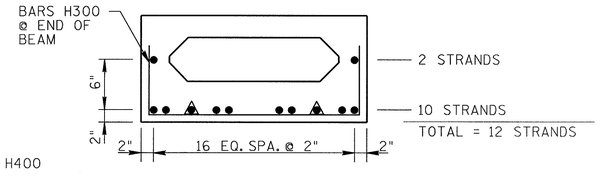

SECTION C-C
(SHOWING ½" DIA. PRESTRESSING STRANDS)
▲: DENOTES BREAK BOND 4'-0" FROM END OF BEAM

DESIGNED BY	WAP	DATE	AUGUST 2013
DRAWN BY	MP	DATE	AUGUST 2013
SUPERVISED BY	WAP	DATE	AUGUST 2013
CHECKED BY	WAP	DATE	AUGUST 2013

STATE OF TENNESSEE
DEPARTMENT OF TRANSPORTATION
BUREAU OF HIGHWAYS

PRESTRESSED BOX BEAMS
STATE ROUTE 1
OVER
CANEY FORK RIVER
BRIDGE NO. 18-SR001-06.36
CUMBERLAND COUNTY
2014

BR-116-57

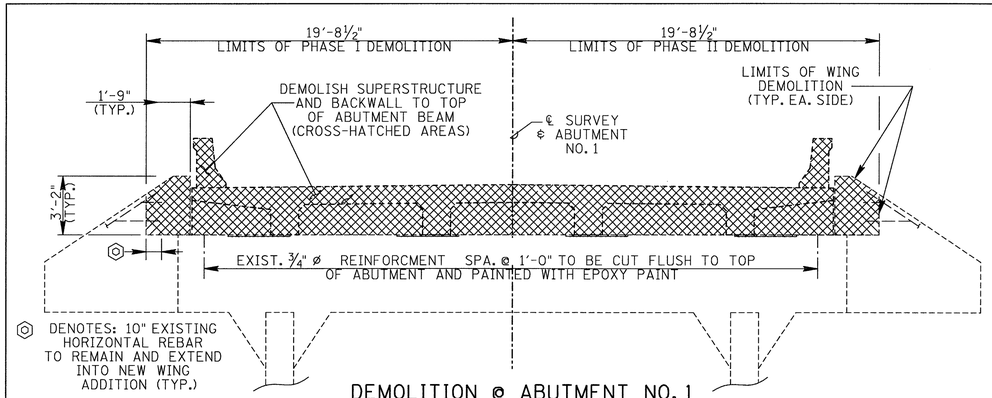

DEMOLITION @ ABUTMENT NO. 1

LOOKING BACK ON SURVEY

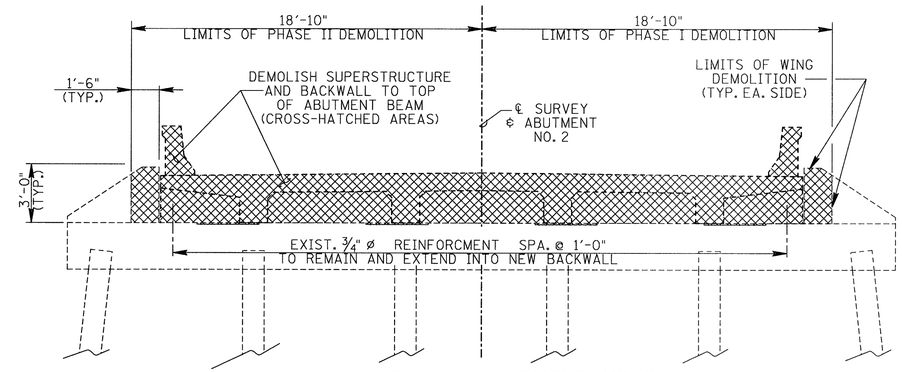

DEMOLITION @ ABUTMENT NO. 2

LOOKING FORWARD ON SURVEY

PROJECT NO.	YEAR	SHEET NO.
18002-4230-04	2014	

REVISIONS

NO.	DATE	BY	BRIEF DESCRIPTION

NOTE: TOP OF EXIST. CAP SHALL BE MECHANICALLY ROUGHENED APPROX. ¼" IN AREAS UNDER NEW RISER BLOCKS. COST TO BE INCLUDED IN OTHER BID ITEMS. (TYP.)

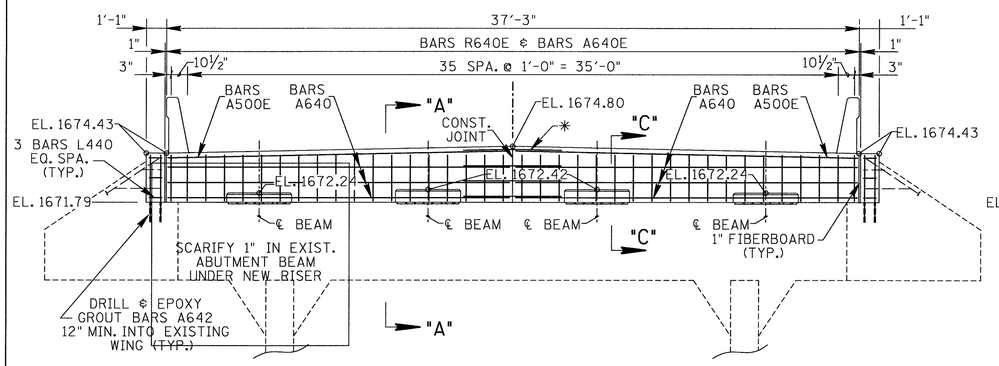

ELEVATION

LOOKING BACK ON SURVEY AT ABUTMENT NO. 1

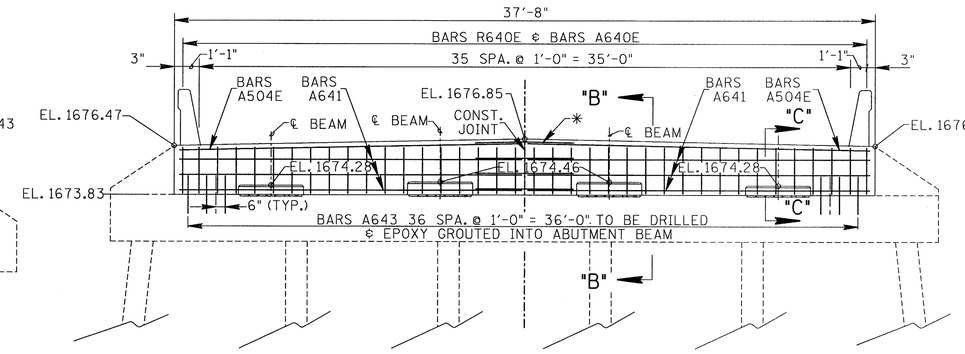

ELEVATION

LOOKING FORWARD ON SURVEY AT ABUTMENT NO. 2

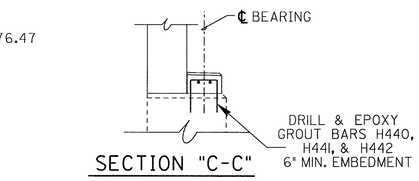

SECTION "C-C"

SHOWING RISER BLOCK REINFORCEMENT (TYPICAL AT ABUTMENTS) SEE PLAN OF RISER BLOCKS BELOW FOR MORE INFORMATION

✱ DENOTES: NO. 6 EPOXY COUPLER BARS S/W BARS A500E OR BARS A504E AND NO. 7 COUPLER BAR S/W BARS A640 OR BARS A641 (TYP. @ CONSTRUCTION JOINT)

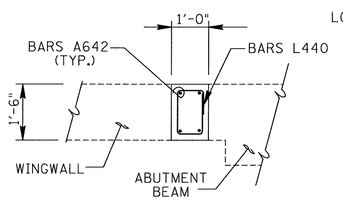

PART-PLAN

ABUTMENT NO. 1 WING ADDITION SHOWING REINFORCEMENT

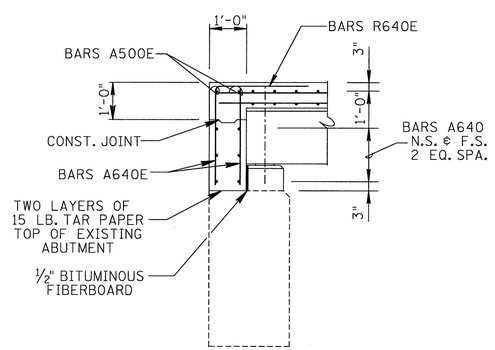

SECTION "A-A"

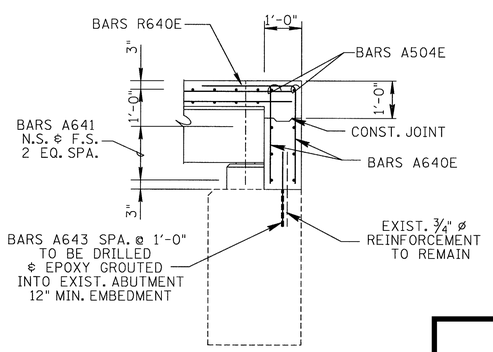

SECTION "B-B"

PLAN

SHOWING RISER BLOCK REINFORCEMENT ABUTMENT NO. 1

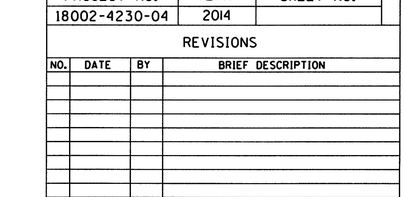

PLAN

SHOWING RISER BLOCK REINFORCEMENT ABUTMENT NO. 2

ESTIMATED QUANTITIES			
	ITEM NO. 604-03.01	ITEM NO. 604-03.02	ITEM NO. 604-02.03
	CLASS "A" CONCRETE C.Y.	STEEL BAR REINFORCING LBS.	EPOXY COATED REINFORCING STEEL LBS.
ABUT. 1	3	573	390
ABUT. 2	3	573	390

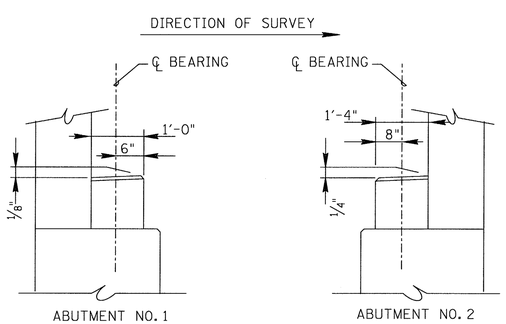

RISER BLOCK DETAIL

NOTE: RISER BLOCK BEARING SURFACE TO COMFORM TO BOTTOM OF BEAM GRADE.

NOTE: NOT LESS THAN HALF OF THE SLAB IN THE END SPAN SHALL BE POURED PRIOR TO, OR CONCURRENTLY WITH, PLACEMENT OF ANY PART OF THE ABUTMENT BACKWALL. AT LEAST THE TOP 12 INCHES OF THE BACKWALL SHALL BE POURED CONCURRENTLY WITH THE END OF SLAB.

NOTE: ELASTOMERIC PADS SHALL BE IN PLACE A MINIMUM OF ONE DAY BEFORE BEING DISTURBED BY SETTING BEAMS. PLACE RUBBER BONDING CEMENT IN SUCH A WAY THAT VISIBLE CONCRETE SURFACES WILL NOT BE STAINED. THE COST OF ELASTOMERIC PADS TO BE INCLUDED IN COST OF ITEM 615-02.02, PRESTRESSED CONCRETE BOX BEAM (17"X 36"), L.F.

NOTE: ALL PRECAST GIRDERS TO BE IN PLACE PRIOR TO CONCRETE BEING POURED FOR BACKWALLS.

NOTE: THE COST OF FORMING, LABOR, CONCRETE AND MISCELLANEOUS MATERIALS OTHER THAN REINFORCING STEEL NECESSARY TO MODIFY ABUTMENTS SHALL BE INCLUDED IN ITEM NO. 604-03.01, CLASS "A" CONCRETE, C.Y.

NOTE: CLASS "D" CONCRETE (BRIDGE DECK) LIMITS SHALL EXTEND TO BACKWALL CONSTRUCTION JOINT SHOWN IN SECTION "A-A" AND SECTION "B-B".

UNOFFICIAL SET

NOT FOR BIDDING

STATE OF TENNESSEE
DEPARTMENT OF TRANSPORTATION
BUREAU OF HIGHWAYS

ABUTMENT DETAILS
STATE ROUTE 1
OVER
CANEY FORK RIVER
BRIDGE NO. 18-SR001-6.36
CUMBERLAND COUNTY
2014

DESIGNED BY	JCP	DATE	NOV. 2013
DRAWN BY	JCP	DATE	NOV. 2013
SUPERVISED BY	WAP	DATE	NOV. 2013
CHECKED BY	WAP	DATE	NOV. 2013

BR-116-58

PROJECT NO.	YEAR	SHEET NO.
18002-4230-04	2014	

REVISIONS

NO.	DATE	BY	BRIEF DESCRIPTION

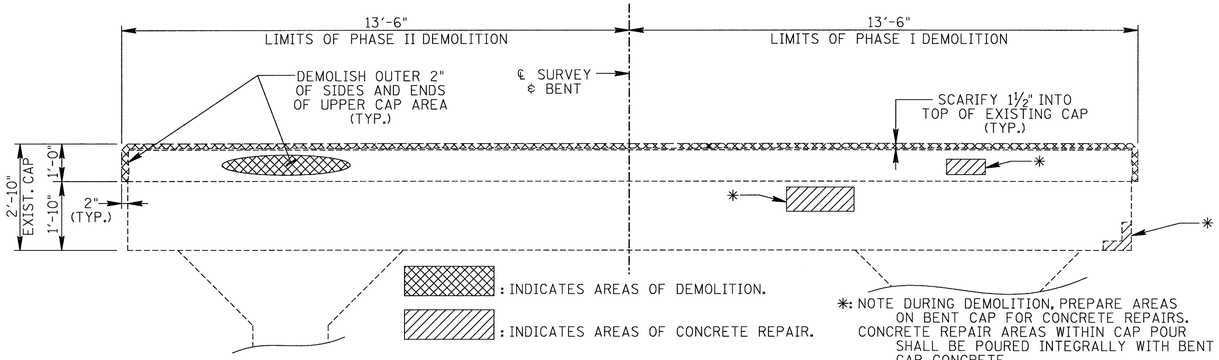

*: NOTE DURING DEMOLITION, PREPARE AREAS ON BENT CAP FOR CONCRETE REPAIRS. CONCRETE REPAIR AREAS WITHIN CAP POUR SHALL BE POURED INTEGRALLY WITH BENT CAP CONCRETE.
COST OF REPAIR AREA PREPARATION AND CONCRETE IN REPAIR AREAS TO BE INCLUDED IN ITEM NO. 604-10.54 OR ITEM NO. 604-10.05.
SEE SHEET NO. BR-116-62 FOR ADDITIONAL DETAILS.

TYPICAL EXISTING BENT ELEVATION
SHOWING DEMOLITION

	ELEV. "A"	ELEV. "B"	ELEV. "C"
BENT NO. 1	1672.52	1672.70	1672.35
BENT NO. 2	1673.77	1673.95	1673.60

TABLE OF ELEVATIONS

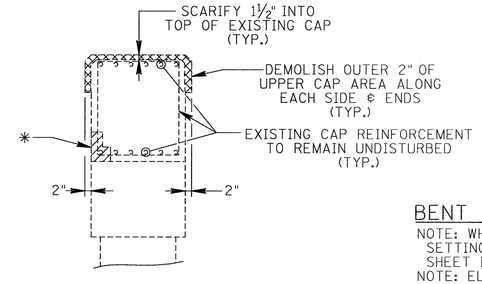

TYPICAL SECTION @ EXISTING CAP
SHOWING DEMOLITION

BENT GENERAL NOTES:

NOTE: WHEN POURING CAP BEAM, PROVISIONS SHALL BE MADE FOR SETTING ANCHOR BOLTS. SEE STANDARD DRAWING STD-6-1 AND SHEET NO. BR-116-56 FOR DETAILS.
NOTE: ELASTOMERIC PADS SHALL BE IN PLACE A MINIMUM OF ONE DAY BEFORE BEING DISTURBED BY SETTING BEAMS. PLACE RUBBER BONDING CEMENT IN SUCH A WAY THAT VISIBLE CONCRETE SURFACES WILL NOT BE STAINED. THE COST OF ELASTOMERIC PADS TO BE INCLUDED IN COST OF ITEM 615-02.02, PRESTRESSED CONCRETE BOX BEAM (17"X36"), L.F.
NOTE: THE COST OF FORMING, LABOR, CONCRETE AND MISCELLANEOUS MATERIALS OTHER THAN REINFORCING STEEL NECESSARY TO MODIFY ABUTMENTS SHALL BE INCLUDED IN ITEM NO. 604-03.01, CLASS "A" CONCRETE, C.Y.

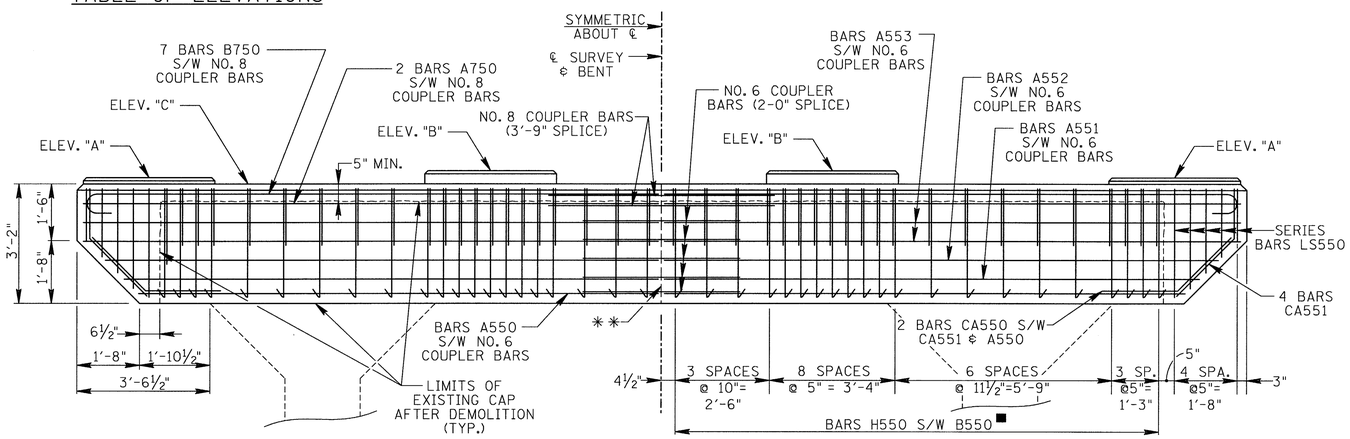

**: INDICATES PHASED CONSTRUCTION JOINT

■: INDICATES TURN HOOKS OF BARS B550 SO AS TO FIT WITHIN LIMITS OF POUR.

TYPICAL BENT ELEVATION
SHOWING REINFORCEMENT

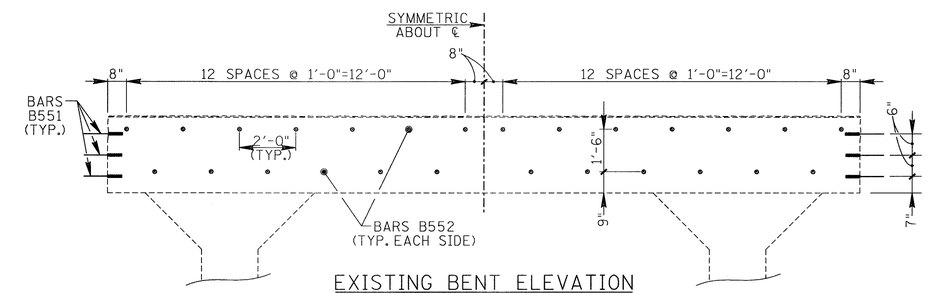

EXISTING BENT ELEVATION
SHOWING DRILL AND GROUT BARS INTO EXISTING CAP AFTER DEMOLITION (EMBEDMENT FOR EPOXY-GROUTED NO. 5'S=6")

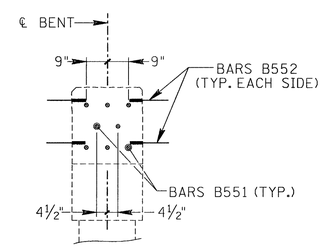

EXISTING CAP: SIDE VIEW
SHOWING DRILL AND GROUT BARS INTO EXISTING CAP AFTER DEMOLITION

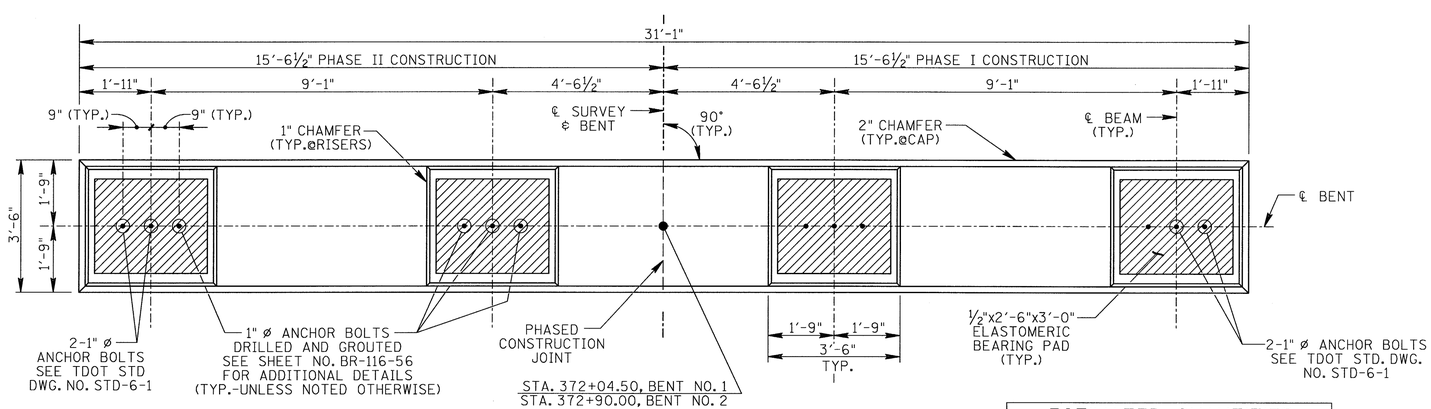

TYPICAL BENT LAYOUT
NOTE: EXISTING BENT NOT SHOWN FOR CLARITY

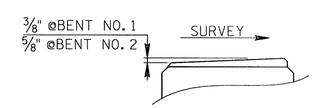

RISER BLOCK SLOPE

ESTIMATED QUANTITIES		
	ITEM NO. 604-03.01	ITEM NO. 604-03.02
	CLASS "A" CONCRETE C.Y.	STEEL BAR REINFORCING LBS.
BENT NO. 1	6	1,944
BENT NO. 2	6	1,944

UNOFFICIAL SET

NOT FOR BIDDING

STATE OF TENNESSEE
DEPARTMENT OF TRANSPORTATION
BUREAU OF HIGHWAYS

BENTS
STATE ROUTE 1
OVER
CANEY FORK RIVER
BRIDGE NO. 18-SR001-06.36
CUMBERLAND COUNTY
2014

DESIGNED BY	WAP	DATE	AUGUST 2013
DRAWN BY	WP/MP	DATE	AUGUST 2013
SUPERVISED BY	WAP	DATE	AUGUST 2013
CHECKED BY	WAP	DATE	AUGUST 2013

BR-116-59

PROJECT NO.	YEAR	SHEET NO.
18002-4230-04	2014	

REVISIONS

NO.	DATE	BY	BRIEF DESCRIPTION

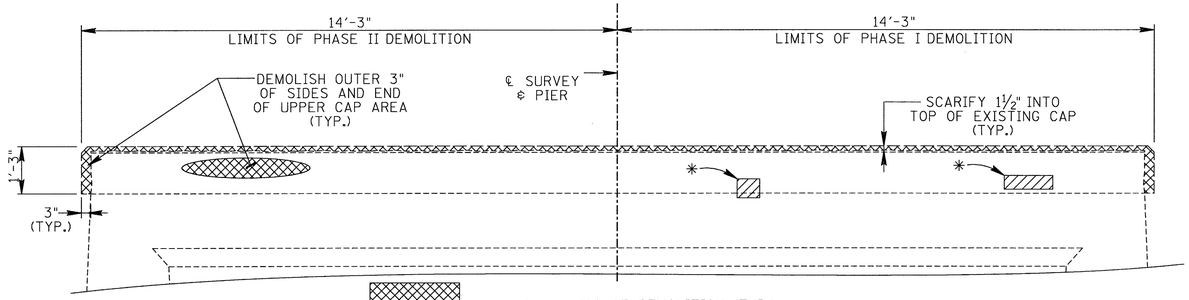

: INDICATES AREAS OF DEMOLITION. (TYP.)

: INDICATES AREAS OF CONCRETE REPAIR.

TYPICAL EXISTING PIER ELEVATION
SHOWING DEMOLITION

*: NOTE DURING DEMOLITION, PREPARE AREAS ON BENT CAP FOR CONCRETE REPAIRS. CONCRETE REPAIR AREAS WITHIN CAP POUR SHALL BE POURED INTEGRALLY WITH BENT CAP CONCRETE.
COST OF REPAIR AREA PREPARATION AND CONCRETE IN REPAIR AREAS TO BE INCLUDED IN ITEM NO. 604-10.54 OR ITEM NO. 604-10.05.
SEE SHEET NO. BR-116-62 FOR ADDITIONAL DETAILS.

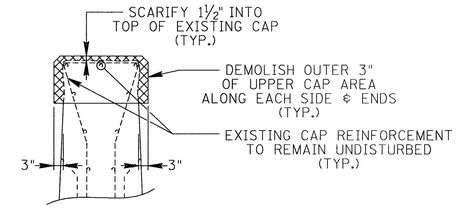

TYPICAL SECTION @ EXISTING CAP
SHOWING DEMOLITION

	ELEV. "A"	ELEV. "B"	ELEV. "C"
PIER NO. 1	1672.88	1673.06	1672.71
PIER NO. 2	1673.29	1673.47	1673.13

TABLE OF ELEVATIONS

PIER GENERAL NOTES:

NOTE: WHEN POURING CAP BEAM, PROVISIONS SHALL BE MADE FOR SETTING ANCHOR BOLTS. SEE STANDARD DRAWING STD-6-1 AND SHEET NO. BR-116-56 FOR DETAILS.
NOTE: ELASTOMERIC PADS SHALL BE IN PLACE A MINIMUM OF ONE DAY BEFORE BEING DISTURBED BY SETTING BEAMS. PLACE RUBBER BONDING CEMENT IN SUCH A WAY THAT VISIBLE CONCRETE SURFACES WILL NOT BE STAINED. THE COST OF ELASTOMERIC PADS TO BE INCLUDED IN COST OF ITEM 6150-02.02, PRESTRESSED CONCRETE BOX BEAM (17"X36"), L.F.
NOTE: THE COST OF FORMING, LABOR, CONCRETE AND MISCELLANEOUS MATERIALS OTHER THAN REINFORCING STEEL NECESSARY TO MODIFY ABUTMENTS SHALL BE INCLUDED IN ITEM NO. 604-03.01, CLASS "A" CONCRETE, C.Y.

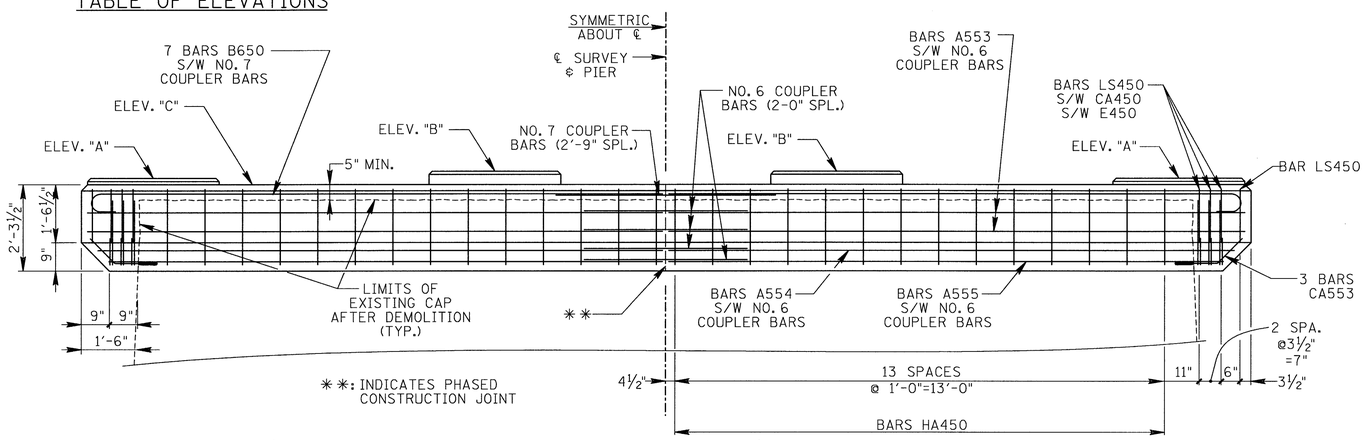

**: INDICATES PHASED CONSTRUCTION JOINT

TYPICAL PIER ELEVATION
SHOWING REINFORCEMENT

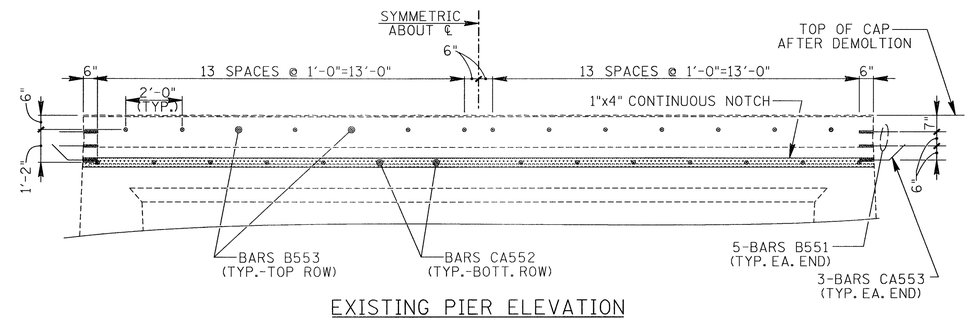

EXISTING PIER ELEVATION
SHOWING DRILL AND GROUT BARS INTO EXISTING CAP AFTER DEMOLITION (EMBEDMENT FOR EPOXY-GROUTED NO. 5'S=6")

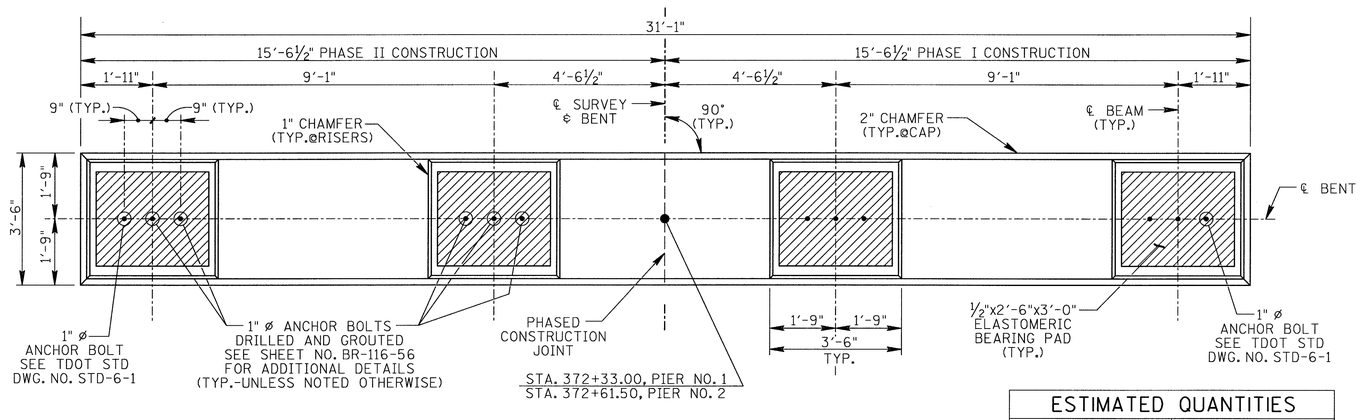

TYPICAL PIER LAYOUT
NOTE: EXISTING PIER NOT SHOWN FOR CLARITY

ESTIMATED QUANTITIES		
	ITEM NO. 604-03.01	ITEM NO. 604-03.02
	CLASS "A" CONCRETE C.Y.	STEEL BAR REINFORCING LBS.
PIER NO. 1	5	1073
PIER NO. 2	5	1073

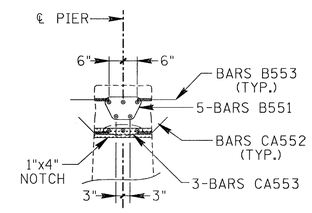

EXISTING CAP: SIDE VIEW
SHOWING DRILL AND GROUT BARS INTO EXISTING CAP AFTER DEMOLITION

UNOFFICIAL SET

NOT FOR BIDDING

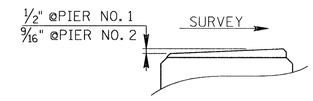

RISER BLOCK SLOPE

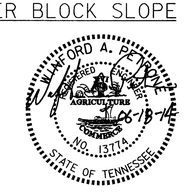

STATE OF TENNESSEE
DEPARTMENT OF TRANSPORTATION
BUREAU OF HIGHWAYS

PIERS
STATE ROUTE 1
OVER
CANEY FORK RIVER
BRIDGE NO. 18-SR001-06.36
CUMBERLAND COUNTY
2014

DESIGNED BY	WAP	DATE	AUGUST 2013
DRAWN BY	TRC/WAP	DATE	AUGUST 2013
SUPERVISED BY	WAP	DATE	AUGUST 2013
CHECKED BY	WAP	DATE	AUGUST 2013

BR-116-60

PROJECT NO.	YEAR	SHEET NO.
18002-4230-04	2014	

REVISIONS

NO.	DATE	BY	BRIEF DESCRIPTION

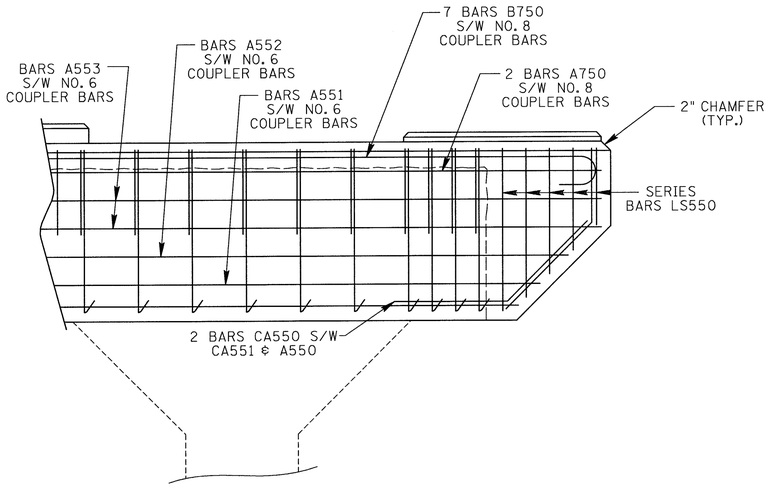

PARTIAL BENT ELEVATION
SHOWING REINFORCEMENT

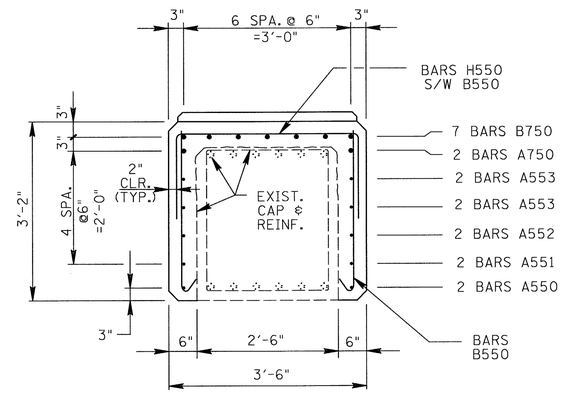

BENT CAP SECTION
@ EXISTING CAP

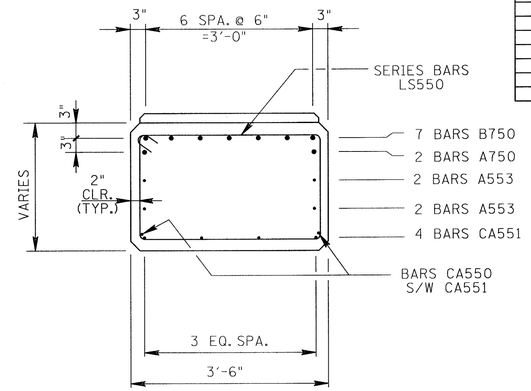

BENT CAP SECTION
@ CANTILEVER EXTENSION

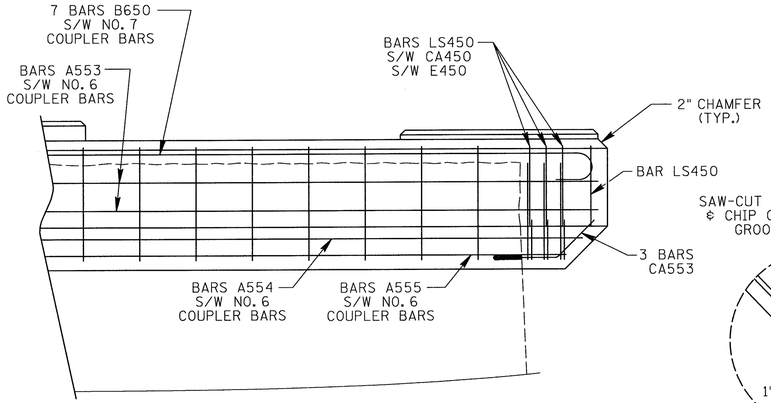

PARTIAL PIER ELEVATION
SHOWING REINFORCEMENT

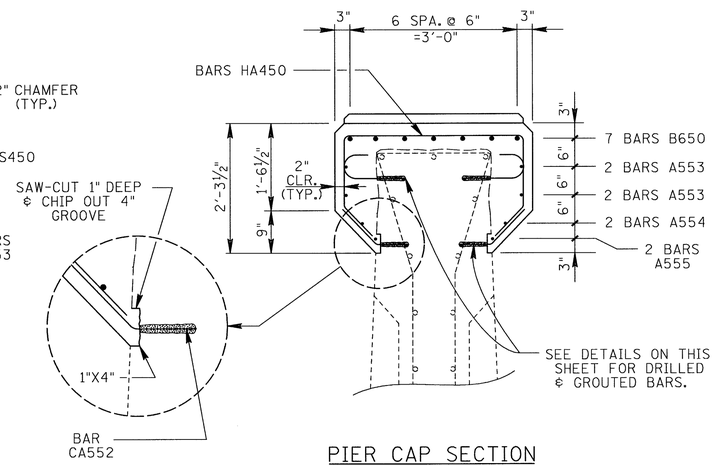

PIER CAP SECTION
@ INTERIOR CAP AREA

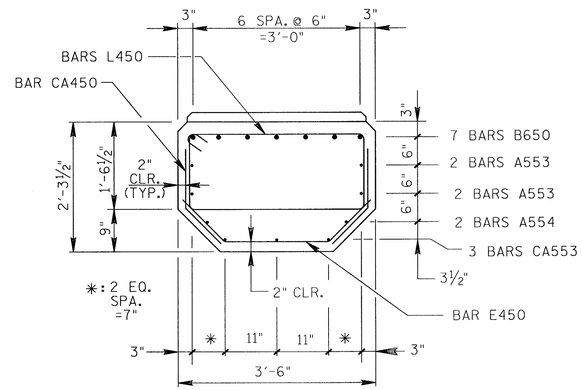

PIER CAP SECTION
@ CANTILEVER EXTENSION

UNOFFICIAL
SET

NOT FOR
BIDDING

STATE OF TENNESSEE
DEPARTMENT OF TRANSPORTATION
BUREAU OF HIGHWAYS

BENT & PIER DETAILS
STATE ROUTE 1
OVER
CANEY FORK RIVER
BRIDGE NO. 18-SR001-06.36
CUMBERLAND COUNTY
2014

WINFORD A. PENNOYER
REGISTERED ENGINEER
DEPARTMENT OF AGRICULTURE & COMMERCE
NO. 13774
STATE OF TENNESSEE
06-18-14

DESIGNED BY	WAP	DATE	AUGUST 2013
DRAWN BY	TRC/WAP	DATE	AUGUST 2013
SUPERVISED BY	WAP	DATE	AUGUST 2013
CHECKED BY	WAP	DATE	AUGUST 2013

BR-116-61

DENOTES: APPROXIMATE AREAS TO BE REPAIRED WITH HIGH EARLY STRENGTH CONCRETE, ITEM NO. 604-10.05. SEE DETAILS AND NOTE ON THIS DRAWING.

DENOTES: APPROXIMATE AREAS TO BE REPAIRED WITH QUICK-SET PATCHING MATERIAL, ITEM NO. 604-10.54. SEE DETAILS AND NOTE ON THIS DRAWING.

PROJECT NO.	YEAR	SHEET NO.
18002-4230-04	2014	

REVISIONS

NO.	DATE	BY	BRIEF DESCRIPTION

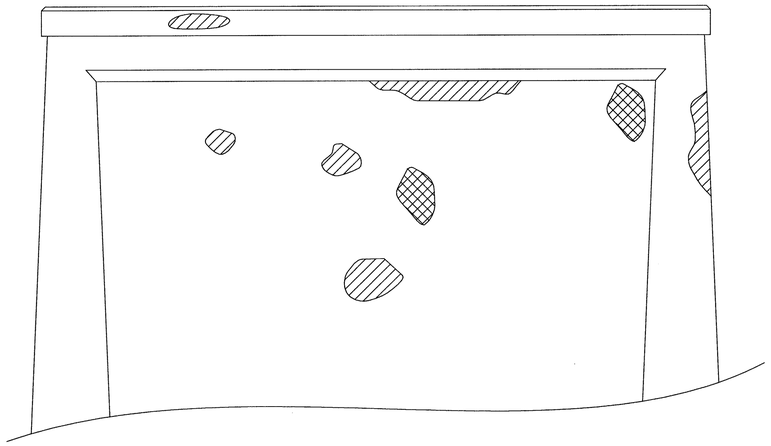

TYPICAL PIER ELEVATION

SHOWING TYPICAL REPAIR AREAS ON PIER NOS. 1 AND 2

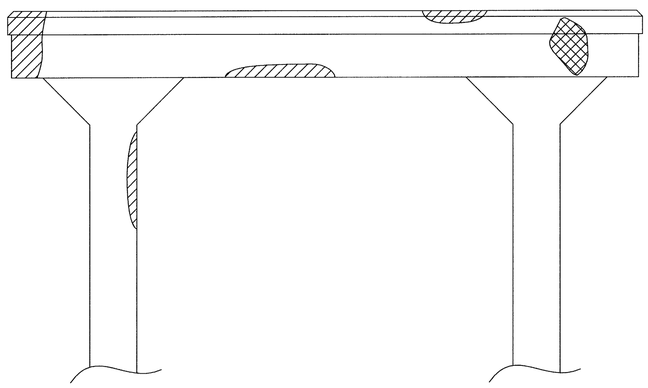

TYPICAL BENT ELEVATION

SHOWING TYPICAL REPAIR AREAS ON BENT NOS. 1 AND 2

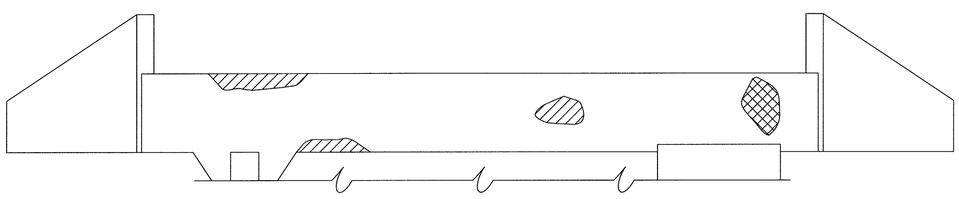

TYPICAL ABUTMENT ELEVATION

SHOWING TYPICAL REPAIR AREAS AT ABUTMENT NO. 1 (ABUTMENT NO. 2 SIMILAR)

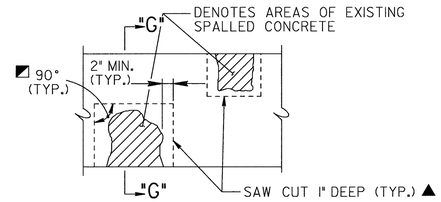

DETAIL SHOWING AREAS OF EXISTING SPALLED CONCRETE SURFACES TO BE REMOVED AND REPAIRED

◪ DENOTES: SAW CUT EXISTING CONCRETE SURFACES SO AS TO OBTAIN SQUARED CORNERS. EDGES SHALL NOT BE FEATHERED OR TAPERED.

▲ DENOTES: SAW CUTS IN SUBSTRUCTURE SHALL BE ONE INCH. EXTREME CAUTION SHALL BE TAKEN TO PREVENT DAMAGE TO EXISTING REINFORCEMENT. APPROXIMATE CLEARANCE TO REINFORCEMENT SHALL BE DETERMINED IN THE FIELD BY THE CONTRACTOR PRIOR TO SAW CUTTING. ALL REINFORCING STEEL SHALL BE COMPLETELY CLEANED TO REMOVE ALL RUST. ALL EXISTING REINFORCING SHALL REMAIN IN PLACE. ALL WORK MUST MEET WITH FULL APPROVAL OF ENGINEER.

NOTE: LIMITS AND LOCATION OF REPAIRS TO BE DESIGNATED BY THE ENGINEER. MIN. DEPTH FOR QUICK-SET PATCHING REPAIR AREAS IS 2" AND FOR HIGH EARLY STRENGTH REPAIR AREAS IS 4". DEPTH MAY BE INCREASED TO EXTEND INTO SOUND CONCRETE AS DIRECTED BY THE ENGINEER.

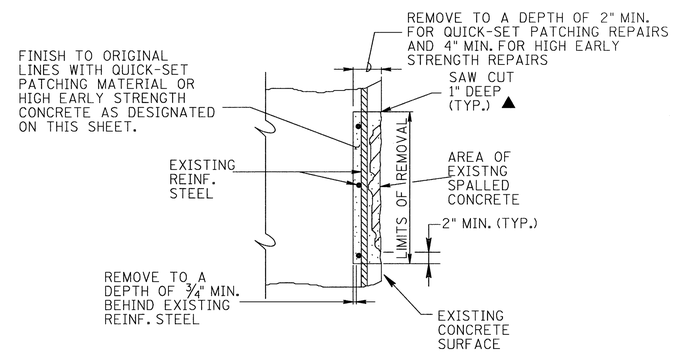

SECTION "G"-"G"

NOTE: THE COST OF REMOVING PORTIONS OF THE EXISTING CONCRETE WITHIN THE LIMITS SHOWN, SAW CUTTING, COMPLETELY CLEANING EXISTING REINFORCING STEEL, QUICK-SET PATCHING MATERIAL, HIGH EARLY STRENGTH CONCRETE, FORMING, LABOR AND ALL MISCELLANEOUS MATERIAL NECESSARY TO COMPLETE THE REPAIRS AS SHOWN SHALL BE INCLUDED IN PRICE BID FOR ITEM NO. 604-10.54 AND 604-10.05, CONCRETE REPAIRS, S.F.

NOTE: POWER DRIVEN HAND TOOLS USED FOR THE REMOVAL OF UNSOUND CONCRETE ARE SUBJECT TO THE FOLLOWING RESTRICTIONS:
1. PNEUMATIC HAMMERS HEAVIER THAN A 35 LB CLASS SHALL NOT BE USED.
2. CHIPPING HAMMERS OF THE 15 LB CLASS SHALL BE USED TO REMOVE CONCRETE FROM BEHIND THE REINFORCING STEEL.

NOTE: PATCHING MATERIAL SHALL BE POLYMER-MODIFIED CEMENTITIOUS STRUCTURAL PATCHING MATERIAL FROM THE TDOT QUALIFIED PRODUCTS LIST 13, SECTION B.6.

ESTIMATED REPAIR QUANTITIES

LOCATION OF REPAIR	ITEM NO. 604-10.54 S.F.	ITEM NO. 604-10.05 S.F.
ABUT. NO. 1	5	5
BENT NO. 1	10	5
BENT NO. 2	10	5
PIER NO. 1	20	50
PIER NO. 2	30	5
ABUT. NO. 2	10	5
TOTAL	85	75

SPECIAL NOTE:

NOTE: FOR SURFACES OF BENT AND PIER CAPS WHICH ARE TO BE INCASED IN CLASS "A" CONCRETE, PREPARE REPAIR AREAS AS INDICATED BUT IN LIEU OF QUICK-SET PATCHING MATERIAL OR HIGH EARLY CONCRETE REPAIR MATERIALS, POUR THE REPAIR AREA MONOLITHICALLY WITH THE CLASS "A" ENCASEMENT CONCRETE. THE PREPARATION AND CLASS "A" CONCRETE WITHIN THE REPAIR AREAS SHALL BE PAID FOR UNDER ITEM NO. 604-10.54 OR ITEM NO. 604-10.05 REPAIRS, S.F. FOR THE ENCASEMENT AREAS.

UNOFFICIAL SET

NOT FOR BIDDING

STATE OF TENNESSEE
DEPARTMENT OF TRANSPORTATION
BUREAU OF HIGHWAYS

SUBSTRUCTURE REPAIRS
STATE ROUTE 1
OVER
CANEY FORK RIVER
BRIDGE NO. 18-SR001-06.36
CUMBERLAND COUNTY
2014

DESIGNED BY	WAP	DATE	AUGUST 2013
DRAWN BY	MP	DATE	AUGUST 2013
SUPERVISED BY	WAP	DATE	AUGUST 2013
CHECKED BY	WAP	DATE	AUGUST 2013

BR-116-62

PROJECT NO.	YEAR	SHEET NO.
18002-4230-04	2014	

REVISIONS

NO.	DATE	BY	BRIEF DESCRIPTION

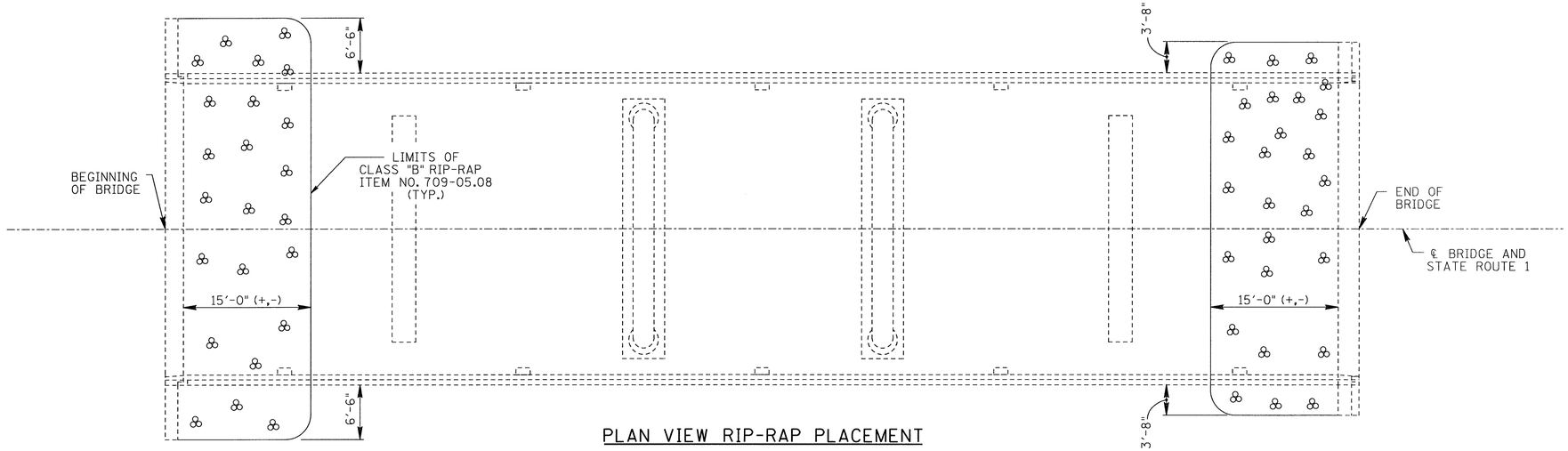

PLAN VIEW RIP-RAP PLACEMENT

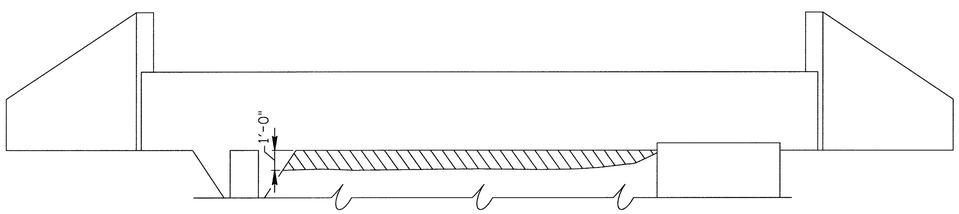

ABUTMENT 1 ELEVATION

: LIMITS OF VOID

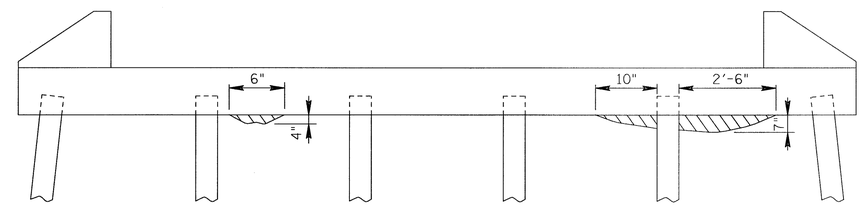

ABUTMENT 2 ELEVATION

: LIMITS OF VOID

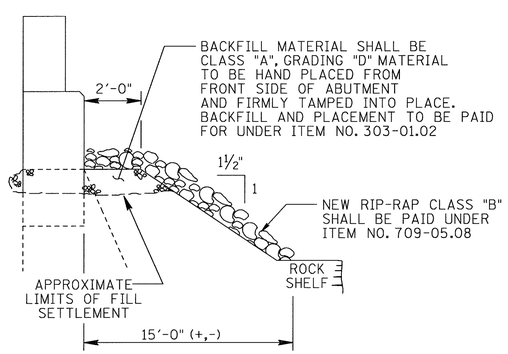

TYPICAL SECTION ℄ ABUTMENT NO. 1

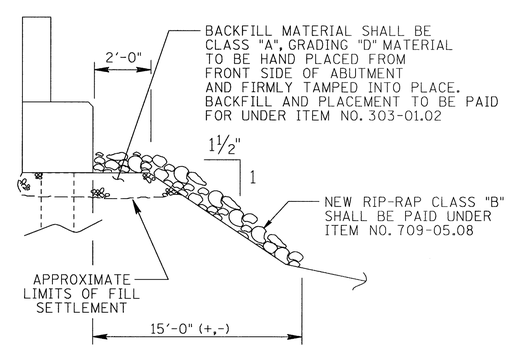

TYPICAL SECTION ℄ ABUTMENT NO. 2

UNOFFICIAL SET

NOT FOR BIDDING

STATE OF TENNESSEE
DEPARTMENT OF TRANSPORTATION
BUREAU OF HIGHWAYS

EMBANKMENT REPAIRS
STATE ROUTE 1
OVER
CANEY FORK RIVER
BRIDGE NO. 18-SR001-06.36
CUMBERLAND COUNTY
2014

DESIGNED BY	WAP	DATE	AUGUST 2013
DRAWN BY	MP	DATE	AUGUST 2013
SUPERVISED BY	WAP	DATE	AUGUST 2013
CHECKED BY	WAP	DATE	AUGUST 2013

BR-116-63

BILL OF STEEL

SUPERSTRUCTURE EPOXY

BAR	LOCATION	SIZE	NO. REQ'D	BENDING DIMENSIONS A	B	C	D	LENGTH
A500E	SLAB	5	800					18'-4"
A501E	SLAB	5	312					30'-0"
A502E	SLAB	5	78					31'-2"
A503E	SLAB	5	396					8'-6"
A504E	SLAB	5	4					18'-6"
A700E	SLAB	7	152					24'-0"
B570E	SLAB/RAIL	5	856	2'-8"				3'-3"
NO. 6 COUPLER BAR (EPOXY)		6	400					4'-10"

SUPERSTRUCTURE NON-EPOXY

BAR	LOCATION	SIZE	NO. REQ'D	BENDING DIMENSIONS A	B	C	D	LENGTH
A500	DIAPHRAGM	5	32					14'-10"
L400	DIAPHRAGM	4	88	1'-2"	1'-0"	1'-3"		5'-10"
LS400	DIAPHRAGM	4	32	1'-2"	4½"	1'-2"		5'-5"
NO. 6 COUPLER BAR		6	16					4'-4"

ABUT. NO. 1 & NO. 2 EPOXY

BAR	LOCATION	SIZE	NO. REQ'D	BENDING DIMENSIONS A	B	C	D	LENGTH
A640E	ABUTMENT 1 & 2	6	76					2'-4"
R640E	ABUTMENT 1 & 2	6	76	2'-6"	2'-0"			4'-6"

ABUT. NO. 1 & NO. 2 NON-EPOXY

BAR	LOCATION	SIZE	NO. REQ'D	BENDING DIMENSIONS A	B	C	D	LENGTH
A640	ABUTMENT 1	6	12					18'-3"
A641	ABUTMENT 2	6	12					18'-6"
A642	ABUTMENT 1	6	8					3'-6"
A643	ABUTMENT 2	6	37					2'-0"
H440	ABUTMENT 1 & 2	4	16	1'-0"	3'-2"			7'-4"
H441	ABUTMENT 1	4	16	8"	1'-0"			2'-8"
H442	ABUTMENT 2	4	16	1'-0"	1'-2"			3'-4"
L440	ABUTMENT 1	4	6	1'-0"	8"	1'-2"		5'-0"
NO. 7 COUPLER BAR (AB 1 & 2)		7	14					5'-10"

PIER 1 NON-EPOXY

BAR	LOCATION	SIZE	NO. REQ'D	BENDING DIMENSIONS A	B	C	D	LENGTH
A553	PIER 1	5	8					15'-3"
A554	PIER 1	5	4					14'-11"
A555	PIER 1	5	4					14'-10"
B551	PIER 1	5	10	1'-6"				2'-1"
B553	PIER 1	5	28	1'-1"				1'-8""
B650	PIER 1	6	14	15'-3"				15'-11"
CA450	PIER 1	4	12	1'-0"	11"	7¾"	7¾"	1'-11"
CA552	PIER 1	5	28	6"	11"	7¾"	7¾"	1'-5"
CA553	PIER 1	5	6	1'-2"	11"	7¾"	7¾"	2'-1"
E450	PIER 1	4	6	1'-10"	11"	7¾"	7¾"	3'-8"
HA450	PIER 1	4	28	3'-2"	1'-3½"	10"	7"	7'-5"
LS450	PIER 1	4	8	3'-2"	4½"	1'-4½"		9'-10"
NO. 6 COUPLER BAR		6	8					4'-4"
NO. 7 COUPLER BAR		7	7"					6'-2"

PIER 1 NON-EPOXY

BAR	LOCATION	SIZE	NO. REQ'D	BENDING DIMENSIONS A	B	C	D	LENGTH
A553	PIER 2	5	8					15'-3"
A554	PIER 2	5	4					14'-11"
A555	PIER 2	5	4					14'-10"
B551	PIER 2	5	10	1'-6"				2'-1"
B553	PIER 2	5	28	1'-1"				1'-8""
B650	PIER 2	6	14	15'-3"				15'-11"
CA450	PIER 2	4	12	1'-0"	11"	7¾"	7¾"	1'-11"
CA552	PIER 2	5	28	6"	11"	7¾"	7¾"	1'-5"
CA553	PIER 2	5	6	1'-2"	11"	7¾"	7¾"	2'-1"
E450	PIER 2	4	6	1'-10"	11"	7¾"	7¾"	3'-8"
HA450	PIER 2	4	28	3'-2"	1'-3½"	10"	7"	7'-5"
LS450	PIER 2	4	8	3'-2"	4½"	1'-4½"		9'-10"
NO. 6 COUPLER BAR		6	8					4'-4"
NO. 7 COUPLER BAR		7	7"					6'-2"

BENT 1 NON-EPOXY

BAR	LOCATION	SIZE	NO. REQ'D	BENDING DIMENSIONS A	B	C	D	LENGTH
A550	BENT 1	5	4					13'-9"
A551	BENT 1	5	4					14'-2"
A552	BENT 1	5	4					14'-8"
A553	BENT 1	5	8					15'-3"
A750	BENT 1	7	4					15'-3"
B550	BENT 1	5	84	2'-10"				3'-5"
B551	BENT 1	5	16	1'-6"				2'-1"
B552	BENT 1	5	52	10"				1'-5"
B750	BENT 1	7	14	15'-3"				16'-1"
CA550	BENT 1	5	4	2'-0"	2'-0"	1'-5"	1'-5"	4'-0"
CA551	BENT 1	5	8	2'-2"	1'-3"	10⅝"	10⅝"	3'-5"
H550	BENT 1	5	42	3'-2"	1'-0"			5'-2"
LS550	BENT 1	5	2	3'-2"	5⅝"	*		56'-8"
				* DIM. VARIES FROM 1'-3" TO 2'-10" BY INC. OF 4¾" (5 BARS TOTAL.)				
NO. 6 COUPLER BAR		6	10					4'-4""
NO. 8 COUPLER BAR		8	9					7'-10"

BENT 2 NON-EPOXY

BAR	LOCATION	SIZE	NO. REQ'D	BENDING DIMENSIONS A	B	C	D	LENGTH
A550	BENT 2	5	4					13'-9"
A551	BENT 2	5	4					14'-2"
A552	BENT 2	5	4					14'-8"
A553	BENT 2	5	8					15'-3"
A750	BENT 2	7	4					15'-3"
B550	BENT 2	5	84	2'-10"				3'-5"
B551	BENT 2	5	16	1'-6"				2'-1"
B552	BENT 2	5	52	10"				1'-5"
B750	BENT 2	7	14	15'-3"				16'-1"
CA550	BENT 2	5	4	2'-0"	2'-0"	1'-5"	1'-5"	4'-0"
CA551	BENT 2	5	8	2'-2"	1'-3"	10⅝"	10⅝"	3'-5"
H550	BENT 2	5	42	3'-2"	1'-0"			5'-2"
LS550	BENT 2	5	2	3'-2"	5⅝"	*		56'-8"
				* DIM. VARIES FROM 1'-3" TO 2'-10" BY INC. OF 4¾" (5 BARS TOTAL.)				
NO. 6 COUPLER BAR		6	10					4'-4""
NO. 8 COUPLER BAR		8	9					7'-10"

PROJECT NO.	YEAR	SHEET NO.
18002-4230-04	2014	

REVISIONS

NO.	DATE	BY	BRIEF DESCRIPTION

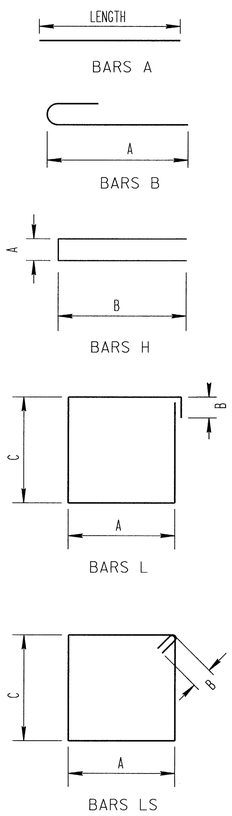

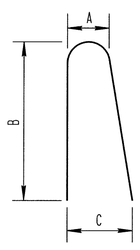

BARS HP

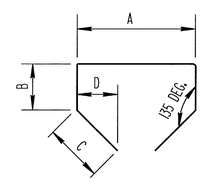

BARS HA

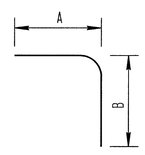

BARS R

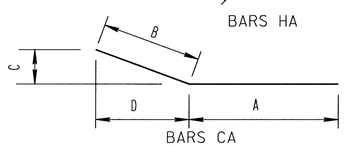

BARS CA

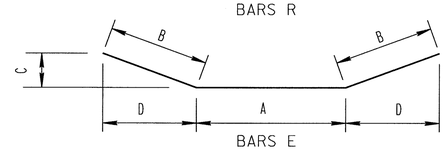

BARS E

DESIGNED BY	WAP	DATE	AUGUST 2013
DRAWN BY	MP	DATE	AUGUST 2013
SUPERVISED BY	WAP	DATE	AUGUST 2013
CHECKED BY	WAP	DATE	AUGUST 2013

UNOFFICIAL SET

NOT FOR BIDDING

WINFORD A. PETRONE REGISTERED ENGINEER AGRICULTURAL CONSULTANT NO. 13774 STATE OF TENNESSEE 06-18-14

STATE OF TENNESSEE
DEPARTMENT OF TRANSPORTATION
BUREAU OF HIGHWAYS

BILL OF STEEL
STATE ROUTE 1
OVER
CANEY FORK RIVER
BRIDGE NO. 18-SR001-06.36
CUMBERLAND COUNTY
2014

BR-116-64