PROJECT NO.	YEAR	SHEET NO.
18945-4552-04	1994	2

REVISIONS

NO.	DATE	BY	BRIEF DESCRIPTION
1	8-31-94	REL	REV. QUANTITIES AS BUILT
2	10-21-94	LWM	REV. QUANTITIES AND NOTES

ESTIMATED BRIDGE QUANTITIES 2

	ITEM NO.	DESCRIPTION	S.R. 101 OVER LAUREL CREEK		S.R. 1 OVER CANEY FORK RIVER		UNIT	TOTAL QUANTITY
	602-10.25	STRUCTURAL STEEL BEAM SUPPORTS	1	~~X~~	15	11	EACH	11
	604-03.09	CLASS "D" CONCRETE (BRIDGE DECK)	2	118	16	97	C.Y.	215
	604-10.13	CONCRETE SLAB REMOVAL	3	0.5	17	0.5	L.S.	1
	604-10.14	REMOVE EXISTING WEARING SURFACE	4	0.5	18	0.5	L.S.	1
	604-10.17	NON-PENETRATING CONCRETE SEALANT	5	101	19	77	S.Y.	178
1	604-10.18	REINFORCING STEEL (REPAIRS)	6 14	35,479	20	20,093	LBS.	55,572
	604-10.30	BRIDGE DECK REPAIRS (FULL DEPTH OF SLAB)	7	~~X~~	21	55	S.Y.	55
1	604-10.42	CONCRETE REPAIRS	8	427	22	17	C.F.	444
	604-10.44	EXPANSION JOINT REPAIRS	9	~~X~~	23	35	L.F.	35
	604-10.50	BRIDGE DECK REPAIRS (PARTIAL DEPTH OF SLAB)	7	~~X~~	21	70	S.Y.	70
	604-10.51	SCARIFYING	10	~~X~~	24	384	S.Y.	384
	604-10.53	CONCRETE REPAIRS	8	12	22	15	S.Y.	27
1	604-10.54	CONCRETE REPAIRS	11	~~X~~	25	132	S.F.	132
	604-10.90	MISCELLANEOUS BRIDGE ITEMS	12	1		--	L.S.	1
	620-03	CONCRETE PARAPET	13	285	26	285	L.F.	570
	615-02.02	PRESTRESSED CONCRETE BOX BEAM (17"x36")	27	545		--	L.F.	545

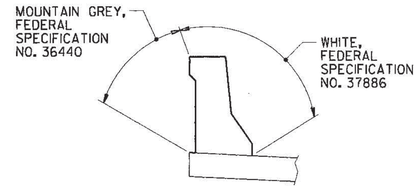

TEXTURE COATING DETAIL

2 NOTE: COST OF TEXTURE COATING SHALL BE INCLUDED IN ITEM NO. 620-03, AND INCLUDES ENDPOSTS AS SHOWN ON STANDARD DWG. NOS. STD-1-1 AND STD-1-2.

NOTE: THE CONTRACTOR SHALL USE CONTAINMENT SCREENS OR OTHER MEASURES AS NECESSARY TO PREVENT ANY TEXTURE COATING FROM ENTERING THE ENVIRONMENT. CONTAINMENT MEASURES SHALL BE APPROVED BY THE ENGINEER AND COST SHALL BE INCLUDED IN ITEMS BID ON.

2 FOOTNOTES: LAUREL CREEK

(1) ~~INCLUDES ALL LABOR AND MATERIALS NECESSARY FOR THE COMPLETE INSTALLATION OF TWO (2) STRUCTURAL STEEL BEAM SUPPORTS AS SHOWN IN DETAILS ON DWG. NO. BR-10-80.~~

(2) INCLUDES ALL LABOR AND MATERIALS (EXCEPT REINFORCING STEEL) NECESSARY TO CONSTRUCT A NEW 8¼" CONCRETE SLAB AND DIAPHRAGMS. SEE DWG. NOS. BR-10-83B, BR-10-83C AND BR-10-83D.

(3) INCLUDES ALL LABOR AND MATERIALS NECESSARY FOR THE REMOVAL AND DISPOSAL OF EXISTING SLAB, BEAMS AND CONCRETE BRIDGERAILS. SEE DWG. NOS. BR-10-83B AND BR-10-83C.

(4) INCLUDES COST OF ALL LABOR AND MATERIALS REQUIRED TO REMOVE AND DISPOSE OF THE EXISTING ASPHALT WEARING SURFACE (APPROX. DEPTH = 6½"±) WITHIN THE LIMITS OF THE BRIDGE.

(5) INCLUDES ALL LABOR AND EQUIPMENT NECESSARY FOR THE APPLICATION OF A NON-PENETRATING CONCRETE SEAL (APPROVED BY THE T.D.O.T. DIVISION OF MATERIALS AND TESTS) TO THE CONCRETE SURFACES OF ALL PIERS AND BENTS. SEE DETAIL ON DWG. NO. BR-10-83.

(6) INCLUDES EPOXY COATED REINFORCING STEEL REQUIRED FOR THE NEW 8¼ INCH CONCRETE SLAB, DIAPHRAGMS AND REPAIR OF SUBSTRUCTURES. SEE BILL OF STEEL ON DWG. NOS. BR-10-82 AND BR-10-83D.

(7) ~~INCLUDES ALL QUANTITIES FOR FULL OR PARTIAL DEPTH DECK REPAIRS AS SHOWN IN DETAIL ON DWG. NO. BR-10-76. ITEM NO. 604-10.30 AND 604-10.50 ARE CONTINGENCY ITEMS THAT MAY BE INCREASED, DECREASED, OR ELIMINATED AS DIRECTED BY THE ENGINEER.~~

(8) INCLUDES ALL HIGH EARLY STRENGTH CONCRETE TO REPAIR CONCRETE SURFACE DEFECTS ON ABUTMENTS, BENTS AND PIERS. SEE DETAILS ON DWG. NO. BR-10-81, BR-10-82, BR-10-83, BR-10-83A AND BR-10-83G.

(9) ~~INCLUDES ALL LABOR AND MATERIALS NECESSARY TO INSTALL NEW EXPANSION JOINT AT BENT NO. 1. SEE DETAIL ON DWG. NO. BR-10-78.~~

(10) ~~INCLUDES ALL QUANTITIES TO SCARIFY 1" OF CONCRETE FROM EXISTING BRIDGE DECK AFTER REMOVAL OF EXISTING ASPHALT OVERLAY AND CONCRETE CANTILEVERS. SEE DWG. NO. BR-10-76.~~

(11) ~~INCLUDES ALL QUICK SET PATCHING MATERIAL TO REPAIR CONCRETE SURFACE DEFECTS ON SUPERSTRUCTURE INCLUDING BEAM END REPAIRS. SEE DETAILS ON DWG. NO. BR-10-79.~~

(12) INCLUDES ALL LABOR AND MATERIALS NECESSARY TO PLACE AND COMPACT NEW CLASS "A", GRADING "D" AT FILL SETTLEMENT REPAIR LOCATIONS. SEE DETAIL ON DWG. NO. BR-10-83.

(13) INCLUDES ALL LABOR AND MATERIALS NECESSARY TO CONSTRUCT NEW CONCRETE PARAPET WITH ENDPOSTS AND PARAPET DRAINS. SEE STANDARD DWG. NOS. STD-1-1 AND STD-1-2 AND DWG. NO. BR-10-83B. APPLICATION OF TEXTURE COATING SHALL BE AS SHOWN ON THIS SHEET.

(14) MECHANICAL BAR SPLICE MUST BE APPROVED BY THE DIVISION OF MATERIALS AND TESTS. DOWEL BAR SPLICER AND DOWEL-IN SHALL BE DEFORMED, GRADE 60. WHEN EPOXY COATING IS REQUIRED, THE EXPOSED THREADS SHALL BE REPAIRED AFTER SPLICING, ACCORDING TO SPECIAL PROVISION 907A. THE SPLICING BAR AND THE ROOT DIMENSION AT THE THREAD SHALL BE NO LESS THAN THE NOMINAL DIAMETER OF THE SIZE BAR DESIGNATED TO BE SPLICED. THE COST OF FURNISHING THE BAR SPLICES AND DOWELS (EPOXY COATED) INCLUDING ALL LABOR AND MATERIALS NECESSARY FOR COMPLETE INSTALLATION SHALL BE INCLUDED IN THE PRICE BID FOR ITEM NO. 604-10.18, REINFORCING STEEL (REPAIRS), LBS.

(27) COST OF ELASTOMERIC PADS AND RUBBER BONDING CEMENT TO BE INCLUDED IN THE UNIT PRICE BID FOR THE PRESTRESSED BEAMS.

FOOTNOTES: CANEY FORK RIVER

(15) INCLUDES ALL LABOR AND MATERIALS NECESSARY FOR THE COMPLETE INSTALLATION OF ELEVEN (11) STRUCTURAL STEEL BEAM SUPPORTS AS SHOWN IN DETAILS ON DWG. NO. BR-10-89.

(16) INCLUDES ALL LABOR AND MATERIALS (EXCEPT REINFORCING STEEL) NECESSARY TO PLACE NEW 4½INCH CONCRETE OVERLAY AND CANTILEVERS. SEE DWG. NOS. BR-10-85, BR-10-86 AND BR-10-87.

(17) INCLUDES ALL LABOR AND MATERIALS NECESSARY FOR THE REMOVAL AND DISPOSAL OF EXISTING SLAB CANTILEVERS AND CONCRETE BRIDGERAILS. SEE DWG. NO. BR-10-85.

(18) INCLUDES COST OF ALL LABOR AND MATERIALS REQUIRED TO REMOVE AND DISPOSE OF THE EXISTING ASPHALT WEARING SURFACE (APPROX. DEPTH = 4"±) WITHIN THE LIMITS OF THE BRIDGE.

(19) INCLUDES ALL LABOR AND EQUIPMENT NECESSARY FOR THE APPLICATION OF A NON-PENETRATING CONCRETE SEAL (APPROVED BY THE T.D.O.T. DIVISION OF MATERIALS AND TESTS) TO THE TOP CONCRETE SURFACES OF ALL PIERS AND BENTS. SEE DETAIL ON DWG. NO. BR-10-90.

(20) INCLUDES EPOXY COATED REINFORCING STEEL REQUIRED FOR THE NEW 4½ INCH CONCRETE OVERLAY AND CANTILEVERS AND REPAIR OF SUBSTRUCTURES. SEE BILL OF STEEL ON DWG. NOS. BR-10-87 AND BR-10-91.

(21) INCLUDES ALL QUANTITIES FOR FULL OR PARTIAL DEPTH DECK REPAIRS AS SHOWN IN DETAIL ON DWG. NO. BR-10-85. ITEM NO. 604-10.30 AND 604-10.50 ARE CONTINGENCY ITEMS THAT MAY BE INCREASED, DECREASED, OR ELIMINATED AS DIRECTED BY THE ENGINEER.

(22) INCLUDES ALL HIGH EARLY STRENGTH CONCRETE TO REPAIR CONCRETE SURFACE DEFECTS ON ABUTMENTS, BENTS AND PIERS. SEE DETAILS ON DWG. NOS. BR-10-90 AND BR-10-91.

(23) INCLUDES ALL LABOR AND MATERIALS NECESSARY TO INSTALL NEW EXPANSION JOINT AT PIER NO. 1. SEE DETAIL ON DWG. NO. BR-10-87.

(24) INCLUDES ALL QUANTITIES TO SCARIFY 1" OF CONCRETE FROM EXISTING BRIDGE DECK AFTER REMOVAL OF EXISTING ASPHALT OVERLAY AND CONCRETE CANTILEVERS. SEE DWG. NO. BR-10-85.

(25) INCLUDES ALL QUICK SET PATCHING MATERIAL TO REPAIR CONCRETE SURFACE DEFECTS ON SUPERSTRUCTURE INCLUDING BEAM END REPAIRS. SEE DETAILS ON DWG. NO. BR-10-88.

(26) INCLUDES ALL LABOR AND MATERIALS NECESSARY TO CONSTRUCT NEW CONCRETE PARAPET WITH ENDPOSTS AND PARAPET DRAINS. SEE STANDARD DWG. NOS. STD-2-1 AND STD-2-3 AND DWG. NO. BR-10-85. APPLICATION OF TEXTURE COATING SHALL BE AS SHOWN ON THIS SHEET.

2 BRIDGE DECK FORMS: BRIDGE DECK FORMS FOR CONCRETE DECKS SHALL BE CONSTRUCTED USING EITHER REMOVABLE FORMS OR PERMANENT FORMS. PERMANENT FORMS MAY BE REMAIN-IN-PLACE STEEL. PRECAST DECK PANELS SHALL NOT BE USED FOR THIS PROJECT. FORMS SHALL BE ATTACHED BY MEANS OTHER THAN WELDING TO MAIN STRUCTURAL MEMBERS OR REINFORCING STEEL. THE CONTRACTOR SHALL TAKE STEPS TO ASSURE THE STABILITY OF THE EXTERIOR GIRDER AGAINST TWISTING OR OVERTURNING DURING SLAB POURING OPERATIONS.
TEMPORARY ERECTION DIAPHRAGMS MUST BE USED AT THE ENDS OF PRECAST CONCRETE GIRDERS WHERE END DIAPHRAGMS, SUPPORT DIAPHRAGMS, OR ABUTMENT BACKWALLS ARE TO BE POURED CONCURRENTLY WITH THE DECK.
WHEN THE WIDTH OF THE OVERHANG EXCEEDS THE DEPTH OF THE EXTERIOR GIRDER, DETAILS AND DESIGN CALCULATIONS FOR THE CANTILEVER SUPPORT SYSTEM SHALL BE SUBMITTED TO THE ENGINEER FOR APPROVAL.
IF THE USE OF PERMANENT DECK FORMS REQUIRES ADDITIONAL SLAB THICKNESS, THE CONTRACTOR WILL BE REQUIRED TO REDESIGN THE GIRDERS FOR THE ENTIRE CHANGE IN THICKNESS WHEN THE AVERAGE SLAB THICKNESS INCREASE IS MORE THAN 1½ INCHES. ALL CHANGES TO THE GIRDERS SHALL BE AT THE CONTRACTOR'S EXPENSE.

GENERAL NOTES

SPECIFICATIONS: STANDARD ROAD AND BRIDGE SPECIFICATIONS OF THE TENNESSEE DEPARTMENT OF TRANSPORTATION. (MARCH 1981 EDITION).

DESIGN SPECIFICATIONS: AASHTO 1992 EDITION WITH ADDENDA.

HIGH EARLY STRENGTH CONCRETE: THE MIX TO MEET THE REQUIREMENTS OF SPECIAL PROVISION NO. 604CX, CLASS "A", EXCEPT THE CEMENT CONTENT SHALL BE A MINIMUM OF 714 LBS., THE WATER CEMENT RATIO SHALL BE A MAXIMUM OF 0.40. NO FLY ASH REPLACEMENT WILL BE PERMITTED AND THE MINIMUM 28 DAY COMPRESSIVE STRENGTH SHALL BE 3,500 PSI. TRAFFIC SHALL NOT BE PERMITTED ON ANY OF THE REPAIR AREAS UNTIL TEST SPECIMENS ATTAIN A COMPRESSIVE STRENGTH OF 3,000 PSI MINIMUM AND THE CONCRETE HAS BEEN IN PLACE A MINIMUM OF TEN (10) DAYS.

BRIDGE DECK CONCRETE: SHALL BE CLASS "D" CONCRETE IN ACCORDANCE WITH SPECIAL PROVISION NO. 604CX.

SPECIAL NOTE: TO IMPROVE THE FLOWABILITY OF THE HIGH EARLY STRENGTH CONCRETE, THE CONTRACTOR MAY USE ADMIXTURES, (SUPERPLASTICIZERS) IN ACCORDANCE WITH SPECIAL PROVISION NO. 604CX. CONCRETE ADMIXTURES (SUPERPLASTICIZERS) USED SHALL BE APPROVED BY THE TENNESSEE DEPARTMENT OF TRANSPORTATION MATERIALS AND TEST DIVISION PRIOR TO USE. COARSE AGGREGATE FOR THE CONCRETE USED IN THE REPAIR AREAS SHALL BE SIZE 67 STONE.

BRIDGE DECK SURFACE FINISH: TO BE IN ACCORDANCE WITH NOTE ("C") IN SPECIAL PROVISION NO. 604.

CONCRETE CURING: ALL CONCRETE IN REPAIR AREAS TO BE CURED ACCORDING TO SPECIAL PROVISION NO. 604.

REINFORCING STEEL: TO BE ASTM A615 GRADE 60. STANDARD CRSI HOOK DETAILS APPLY UNLESS OTHERWISE NOTED ON BILL OF STEEL. SPACING DIMENSIONS ARE CENTER TO CENTER AND COVER DIMENSIONS ARE CLEAR DISTANCE UNLESS OTHERWISE NOTED. PLACING TOLERANCES ARE ±½" FOR SPACING AND -⅛" OR +⅜" FOR COVER. (THE SUFFIX "E", FOR BARS SO MARKED, DENOTES EPOXY COATED REINFORCEMENT). SEE SPECIAL PROVISION NO. 907A.

GROUTED BARS IN DRILLED HOLES: HORIZONTALLY DRILLED HOLES SHALL BE DRILLED ½" IN DIAMETER LARGER THAN THE BAR, CLEANED, PACKED WITH NON-SHRINK GROUT AND BAR DRIVEN TO ITS SEAT. VERTICALLY DRILLED HOLES SHALL BE DRILLED ¼" IN DIAMETER LARGER THAN THE BAR, CLEANED, PACKED WITH EPOXY GROUT AND BAR DRIVEN TO ITS SEAT. ALL GROUTING MATERIAL SHALL BE APPROVED BY T.D.O.T. MATERIALS AND TESTS.

NON-PAY ITEMS: ONLY ITEMS SHOWN ON THE PROPOSAL AS PAY ITEMS WILL BE PAID FOR. COMPENSATION FOR ALL LABOR, MATERIALS, TOOLS, EQUIPMENT AND INCIDENTALS FOR THE ENTIRE CONTRACT SHALL BE INCLUDED IN THE PRICE FOR PAY ITEMS.

SPECIAL NOTE TO CONTRACTOR: CONTRACTOR SHALL USE EXTREME CARE AND TAKE ANY MEASURE NECESSARY TO INSURE THAT NO DEBRIS IS DROPPED INTO THE STREAM. ANY DEBRIS WHICH IS ALLOWED TO DROP ON THE BANKS BELOW THE BRIDGE SHALL NOT BE ALLOWED TO ENTER THE STREAM AND SHALL BE REMOVED AND DISPOSED OF BY THE CONTRACTOR. COST OF REMOVING AND DISPOSING OF DEBRIS SHALL BE INCLUDED IN ITEMS BID ON.

SHOP DRAWINGS: SHALL BE SUBMITTED ACCORDING TO SPECIAL PROVISION NO. 105A, EXCEPT SHOP DRAWINGS SHALL BE SUBMITTED TO THE HEADQUARTERS BRIDGE INSPECTION AND REPAIR OFFICE IN LIEU OF THE DIVISION OF STRUCTURES.

STRUCTURAL STEEL: SHALL CONFORM TO AASHTO M 270 GRADE 36 (ASTM A709 GRADE 36) UNLESS OTHERWISE NOTED.

WELDING: ANSI/AASHTO/AWS D1.5-88 BRIDGE WELDING CODE AND SPECIAL PROVISION NO. 602.

BOLTS: SHALL BE HIGH TENSILE STRENGTH BOLTS (ASTM-A325), UNLESS OTHERWISE NOTED. SIZE TO BE AS NOTED ON PLANS.

PAINTING (ALL NEW WORK): ALL STRUCTURAL STEEL SHALL BE SHOP PAINTED. PAINT SHALL BE SYSTEM "B" INORGANIC ZINC PAINT SYSTEM, EXCEPT URETHANE FINISH COAT SHALL BE USED IN LIEU OF VINYL FINISH COAT. COLOR OF THE URETHANE FINISH SHALL COMPLY WITH FEDERAL STANDARD NO. 595a, 24110 GREEN. SEE SECTIONS 603 AND 910 OF THE STANDARD SPECIFICATIONS FOR ROAD AND BRIDGE CONSTRUCTION OF THE TENNESSEE DEPARTMENT OF TRANSPORTATION. SEE SPECIAL PROVISION NO. 603A, REGARDING PAINTING.

QUICK SET PATCHING MATERIAL: QUICK SET PATCHING MATERIAL SHALL BE A POLYMER, MODIFIED CEMENTITIOUS PATCHING MATERIAL SUCH AS SIKA TOP 123, MASTERPATCH 230 VP OR APPROVED EQUAL.

STATE OF TENNESSEE
2 1 DEPARTMENT OF TRANSPORTATION

GENERAL NOTES AND
ESTIMATED QUANTITIES
S.R. 101 OVER LAUREL CREEK
BRIDGE NO. 18-SR101-5.69
S.R. 1 OVER CANEY FORK RIVER
BRIDGE NO. 18-SR1-6.34
CUMBERLAND COUNTY
1994

DESIGNED BY	R. LOVETT	DATE	11/93
DRAWN BY	G.L.GERTH, CAD/D	DATE	11/93
SUPERVISED BY	PETRONE	DATE	11/93
CHECKED BY	WILSON, PETRONE	DATE	11/93

BR-10-75

SCANNED

02-NOV-1994 16:02
e:\dgn\bennework\92312gnt.dgn

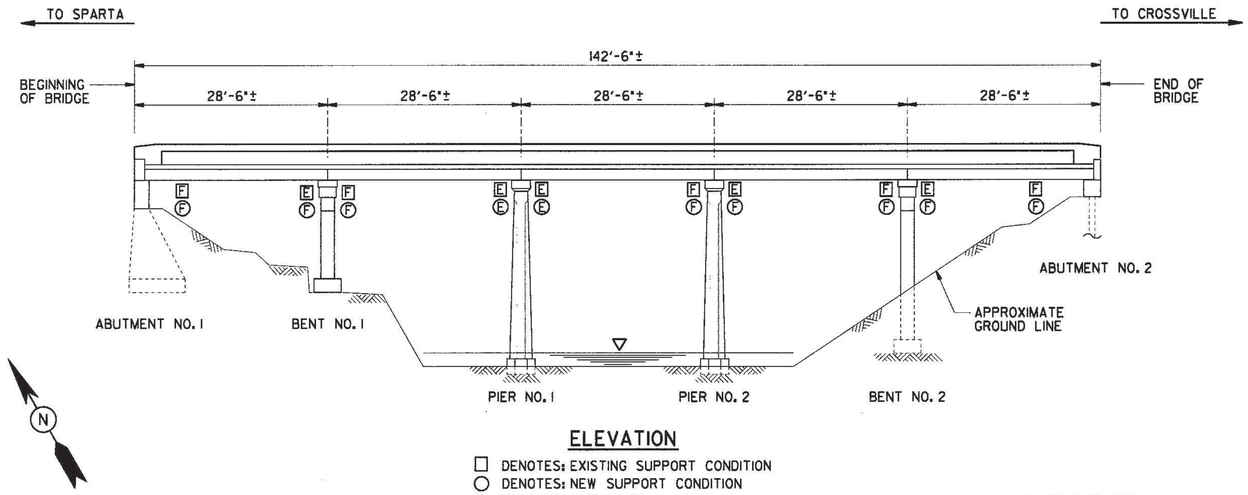

ELEVATION

☐ DENOTES: EXISTING SUPPORT CONDITION
○ DENOTES: NEW SUPPORT CONDITION
E DENOTES: EXPANSION
F DENOTES: FIXED

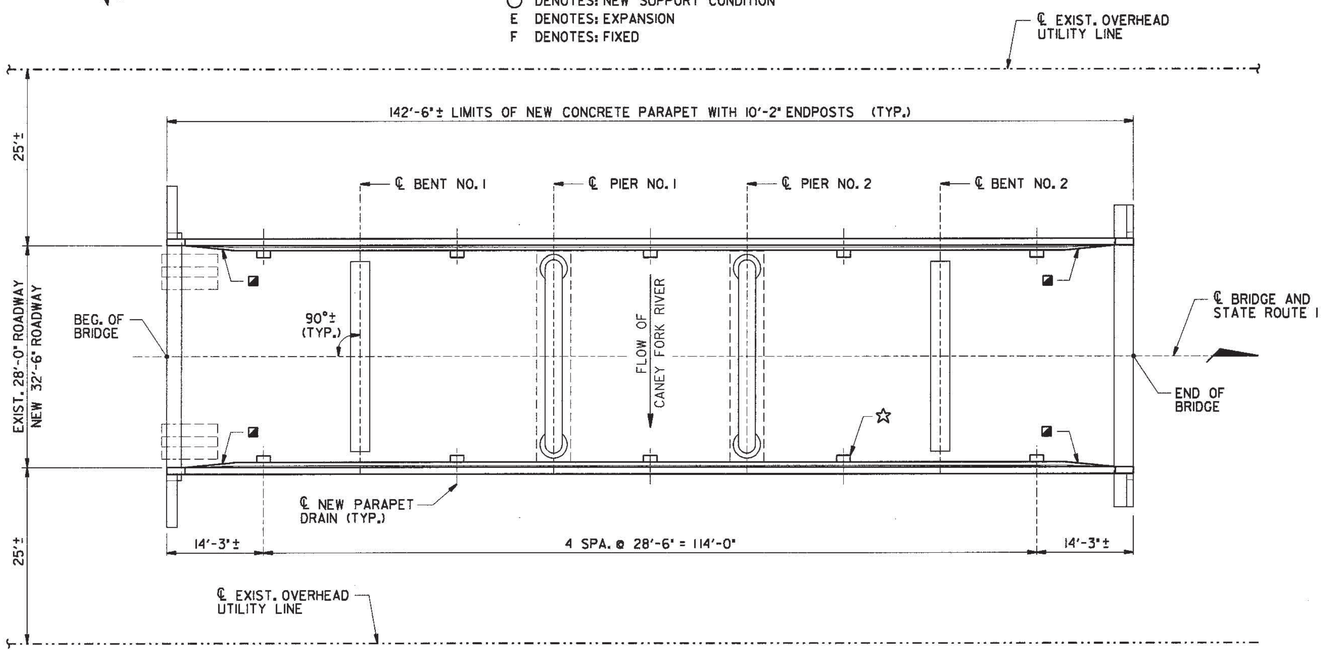

PLAN

◪ DENOTES: NEW 10'-2" CONCRETE PARAPET ENDPOST REQUIRED AT BRIDGE ENDS. SEE STANDARD DWG. NO. STD-2-1 AND DETAIL "C" ON DWG. NO. BR-10-87.

☆ DENOTES: NEW PARAPET DRAINS REQUIRED AS SHOWN. FOR DETAILS SEE DWG. NO. STD-2-3.

LIST OF DRAWINGS

DWG. NO.	LAST REV. DATE	DRAWING
BR-10-84		LAYOUT OF BRIDGE TO BE REPAIRED
BR-10-75		GENERAL NOTES AND ESTIMATED QUANTITIES
BR-10-85		SUPERSTRUCTURE
BR-10-86		SUPERSTRUCTURE DETAILS
BR-10-87		SUPERSTRUCTURE DETAILS
BR-10-88		SUPERSTRUCTURE DETAILS
BR-10-89		STRUCTURAL STEEL BEAM SUPPORT DETAILS
BR-10-90		BENT DETAILS
BR-10-91		PIER AND ABUTMENT DETAILS

LIST OF STANDARD DRAWINGS

DWG. NO.	LAST REV. DATE	DRAWING
STD-2-1	2-15-93	BRIDGE RAILING CONRETE PARAPET
STD-2-3	3-30-92	STANDARD PARAPET DRAINS
STD-12-1	9-01-91	GUARDRAIL ATTACHMENT AND TRANSITION DETAILS
S-GR-SERIES	VARIES	STANDARD GUARDRAIL DETAILS

* LIST OF REFERENCE DRAWINGS

DWG. NO.	DRAWING
F-2-65, F-2-113, F-10-6, F-10-14 F-12-94, C-4-143	EXISTING BRIDGE DRAWINGS

LIST OF SPECIAL PROVISIONS

NO.	LAST REV. DATE	REGARDING
100	**	REVISIONS AND ADDITIONS TO STANDARD SPECIFICATIONS
105A	**	APPROVAL OF SHOP DRAWINGS
209	**	PROJECT EROSION AND SILTATION CONTROL
602	**	SECTION 602 STEEL STRUCTURES
603A	**	PAINTING
604	**	CONCRETE STRUCTURES
604CX	**	CONTRACTOR - MIX DESIGN AND TESTING STRUCTURAL CONCRETE
604R	**	RIDEABILITY OF BRIDGE DECKS AND ROADWAY APPROACHES
907A	**	EPOXY COATED REINFORCING STEEL

** DENOTES: CURRENT REVISION DATE, AS PER CONTRACT DOCUMENTS.
* DENOTES: THESE DRAWINGS TO BE PRINTED WITH PLANS.

GENERAL SCOPE OF WORK

1) REMOVE EXISTING 4"± ASPHALT OVERLAY FOR ENTIRE LENGTH OF BRIDGE AND FOR A 50 FT. TRANSITION LENGTH BEYOND EACH BRIDGE END. SEE DETAIL ON SHEET 2A.
2) PROVIDE REQUIRED TRAFFIC CONTROL TO MAINTAIN ONE LANE OF TRAFFIC ON THE EXISTING BRIDGE.
3) REMOVE EXISTING CANTILEVERS AND BRIDGERAILS FOR ENTIRE LENGTH OF BRIDGE. SCARIFY EXISTING DECK 1". PLACE EPOXY COATED REINFORCEMENT, AND POUR 4½" NEW CONCRETE OVERLAY AND CANTILEVERS. SEE DWG. NOS. BR-10-85 AND BR-10-86.
4) RECONSTRUCT CONCRETE SLAB IN AREAS OF PARTIAL AND FULL DEPTH DECK REPAIRS WITHIN LIMITS DESIGNATED BY THE ENGINEER AS SHOWN IN DETAIL ON DWG. NO. BR-10-85. DECK REPAIR CONCRETE TO BE PLACED MONOLITHICALLY WITH NEW 4½" CONCRETE OVERLAY.
5) REMOVE PORTIONS OF THE EXISTING SLAB AT PIER NO. 1 WITHIN LIMITS SHOWN, AND RECONSTRUCT SLAB ENDS WITH NEW WATERTIGHT EXPANSION JOINT. SEE DETAILS AND NOTES ON DWG. NO. BR-10-87.
6) INSTALL NEW STRUCTURAL STEEL BEAM SUPPORTS AT ELEVEN (11) LOCATIONS AS SHOWN ON DWG. NO. BR-10-89.
7) INSTALL NEW CONCRETE PARAPET WITH ENDPOSTS AND PARAPET DRAINS (WHERE SHOWN). SEE STANDARD DWG. NOS. STD-2-1 AND STD-2-3 AND DWG. NOS. BR-10-85, BR-10-86 AND BR-10-87.
8) REPAIR BENT AND PIER CAPS BY CHIPPING TO SOUND CONCRETE, GROUTING NEW EPOXY REINFORCEMENT AND POURING BACK HIGH EARLY STRENGTH CONCRETE TO ORIGINAL CAP BEAM AND COLUMN LINES. SEE DETAILS ON DWG. NOS. BR-10-90 AND BR-10-91.
9) REPAIR EXISTING CONCRETE SURFACE DEFECTS ON EXISTING DECK GIRDERS AND FACES OF SUBSTRUCTURES. SEE DETAILS ON DWG. NO. BR-10-88 AND DWG. NO. BR-10-90.
10) CLEAN EXISTING CONCRETE SURFACES OF PIERS AND BENTS AND APPLY NON-PENETRATING CONCRETE SEAL WITHIN LIMITS SHOWN ON DWG. NO. BR-10-90.
11) REMOVE PORTIONS OF THE EXISTING GUARDRAIL AND INSTALL NEW METAL GUARDRAIL ATTACHMENT AT BRIDGE ENDS AT ALL FOUR CORNERS OF THE EXISTING BRIDGE. FOR DETAILS, SEE SHEET 2A, STANDARD DWG. NO. STD-12-1 AND S-GR-SERIES.
12) CONSTRUCT NEW ASPHALT APPROACH TRANSITIONS AS SHOWN IN DETAIL ON SHEET 2A.

PROJECT NO.	YEAR	SHEET NO.
18945-4552-04	1994	

REVISIONS

NO.	DATE	BY	BRIEF DESCRIPTION

STATE OF TENNESSEE
DEPARTMENT OF TRANSPORTATION
BUREAU OF HIGHWAYS

LAYOUT OF BRIDGE TO BE REPAIRED
STATE ROUTE 1
OVER
CANEY FORK RIVER
BRIDGE NO. 18-SRI-6.34
CUMBERLAND COUNTY
1994

BR-10-84

DESIGNED BY R. LOVETT DATE 11/93
DRAWN BY G.L.GERTH, CAD/D DATE 11/93
SUPERVISED BY PETRONE DATE 11/93
CHECKED BY WILSON, PETRONE DATE 11/93

SCANNED

29-NOV-1993 14:54
0521C1000021292306LAY.DGN:1

PROJECT NO.	YEAR	SHEET NO.
18945-4552-04	1994	

REVISIONS

NO.	DATE	BY	BRIEF DESCRIPTION

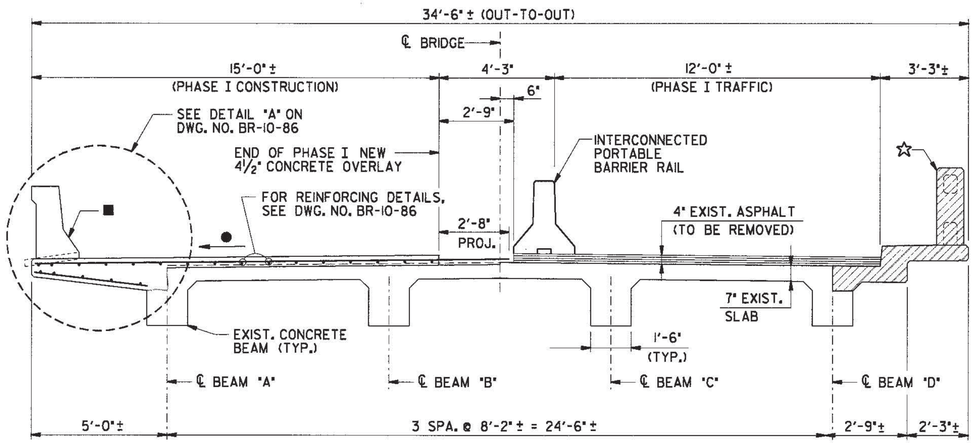

PHASE I CONSTRUCTION

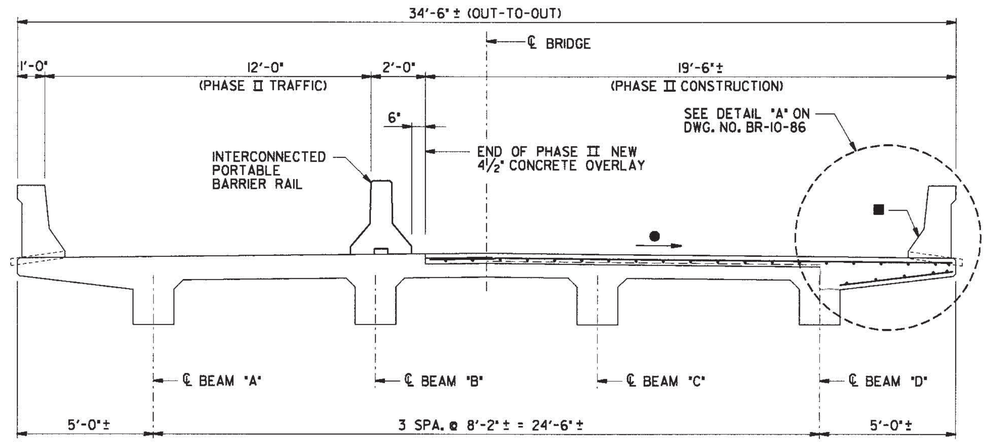

PHASE II CONSTRUCTION

TYPICAL CROSS SECTIONS

(LOOKING FORWARD ON SURVEY)

■ DENOTES: NEW CONCRETE PARAPET. SEE STANDARD DWG. NO. STD-2-1. EXISTING BRIDGERAIL AND CONCRETE CANTILEVER NOT SHOWN FOR CLARITY.

● DENOTES: THE NEW 4½" CONCRETE OVERLAY SHALL CONFORM TO THE EXISTING CROSS SLOPE OR A MINIMUM SLOPE OF ⅛" PER FOOT. SEE SURFACE FINISH NOTE ON DWG. NO. BR-10-75.

☆ DENOTES: PHASED REMOVAL OF EXISTING BRIDGERAIL AND CONCRETE CANTILEVER FOR ENTIRE LENGTH OF BRIDGE, TYPICAL EACH SIDE.

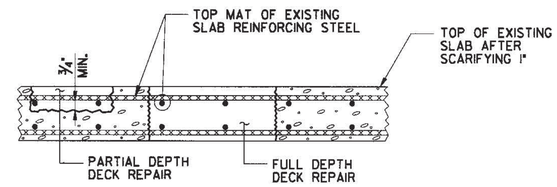

DETAIL SHOWING FULL AND PARTIAL DEPTH DECK REPAIR

NOTE: REMOVE CONCRETE IN ALL DELAMINATED AREAS TO A DEPTH OF ¾" BELOW THE TOP BAR OF THE TOP MAT OF REINFORCING STEEL. ALL REINFORCING STEEL IN AREAS OF DECK REPAIR SHALL BE COMPLETELY CLEANED. AREAS OF CONCRETE REMOVAL SHALL BE DESIGNATED BY PERSONNEL FROM HEADQUARTERS BRIDGE INSPECTION AND REPAIR OFFICE. DECK REPAIR WILL BE PAID FOR UNDER ITEM NO. 604-10.50, BRIDGE DECK REPAIR (PARTIAL DEPTH OF SLAB), AND ITEM NO. 604-10.30, BRIDGE DECK REPAIR (FULL DEPTH OF SLAB). DURING PARTIAL DEPTH REPAIRS, SHOULD DETERIORATED CONCRETE BE ENCOUNTERED WHICH APPEARS TO RUN FULL DEPTH IN THE SLAB, THE ENGINEER MAY DESIGNATE THESE AREAS TO BE REPAIRED UNDER ITEM NO. 604-10.30. POWER DRIVEN HAND TOOLS USED FOR REMOVAL OF UNSOUND CONCRETE IN MAKING PARTIAL DEPTH REPAIRS ARE SUBJECT TO THE FOLLOWING RESTRICTIONS: 1) PNEUMATIC HAMMERS HEAVIER THAN NOMINAL 35 POUND CLASS SHALL NOT BE USED; 2) CHIPPING HAMMERS OF THE 15 POUND CLASS SHALL BE USED TO REMOVE CONCRETE FROM BENEATH ANY REINFORCING STEEL.

NOTE: CONCRETE FOR DECK REPAIR SHALL BE POURED WHEN POURING THE NEW 4½" CONCRETE OVERLAY. THE COST OF THE CONCRETE BELOW THE SCARIFICATION LEVEL TO BE INCLUDED UNDER ITEM NO. 604-10.30 OR 604-10.50.

NOTE: ITEM NO. 604-10.30 AND 604-10.50 SHALL BE BID WITH THE CONTINGENCY THAT THESE ITEMS MAY BE INCREASED, DECREASED OR ELIMINATED AS DIRECTED BY THE ENGINEER.

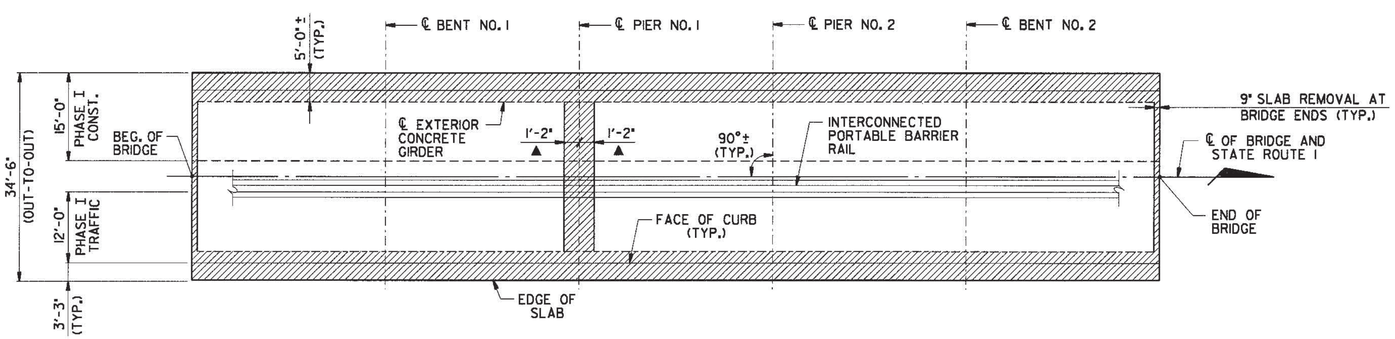

SLAB PLAN

(SHOWING DEMOLITION)

▨ DENOTES: LIMITS OF PHASED CONCRETE SLAB AND CANTILEVER REMOVAL.

▲ DENOTES: LIMITS OF SLAB REMOVAL AT EXISTING JOINT FOR NEW EXPANSION JOINT INSTALLATION.

NOTE: THE EXISTING BRIDGE DECK SHALL BE SCARIFIED 1" DEEP WITHIN PHASED CONSTRUCTION LIMITS SHOWN. NO TRAFFIC SHALL BE PERMITTED AT ANY TIME ON THE SCARIFIED SURFACE OF THE BRIDGE DECK (SEE SPECIAL PROVISION 604CX). THE COST OF SCARIFYING THE BRIDGE DECK TO BE INCLUDED IN ITEM NO. 604-10.51, SCARIFYING, S.Y.

NOTE: PROVISIONS SHALL BE MADE DURING CANTILEVER SLAB REMOVAL TO LEAVE A MINIMUM 1'-3" PROJECTING LENGTH OF THE TRANSVERSE REINFORCEMENT IN PLACE. THE EXISTING REINFORCING STEEL SHALL BE COMPLETELY CLEANED, REALIGNED, AND INCORPORATED INTO THE NEW SLAB CANTILEVER CONSTRUCTION.

NOTE: THE COST OF REMOVING AND DISPOSING OF THE EXISTING CONCRETE SLAB CANTILEVERS AND BRIDGERAILS WITHIN THE LIMITS SHOWN IS TO BE INCLUDED IN ITEM NO. 604-10.13, CONCRETE SLAB REMOVAL, L.S.

STATE OF TENNESSEE
DEPARTMENT OF TRANSPORTATION
BUREAU OF HIGHWAYS

SUPERSTRUCTURE
STATE ROUTE 1
OVER
CANEY FORK RIVER
BRIDGE NO. 18-SRI-6.34
CUMBERLAND COUNTY
1994

DESIGNED BY	R. LOVETT	DATE	11/93
DRAWN BY	G.L.GERTH, CAD/D	DATE	11/93
SUPERVISED BY	PETRONE	DATE	11/93
CHECKED BY	WILSON, PETRONE	DATE	11/93

BR-10-85

26-OCT-1993 11:17
US2:100002323423085STR.DGN:1

PROJECT NO.	YEAR	SHEET NO.
18945-4552-04	1994	

REVISIONS

NO.	DATE	BY	BRIEF DESCRIPTION

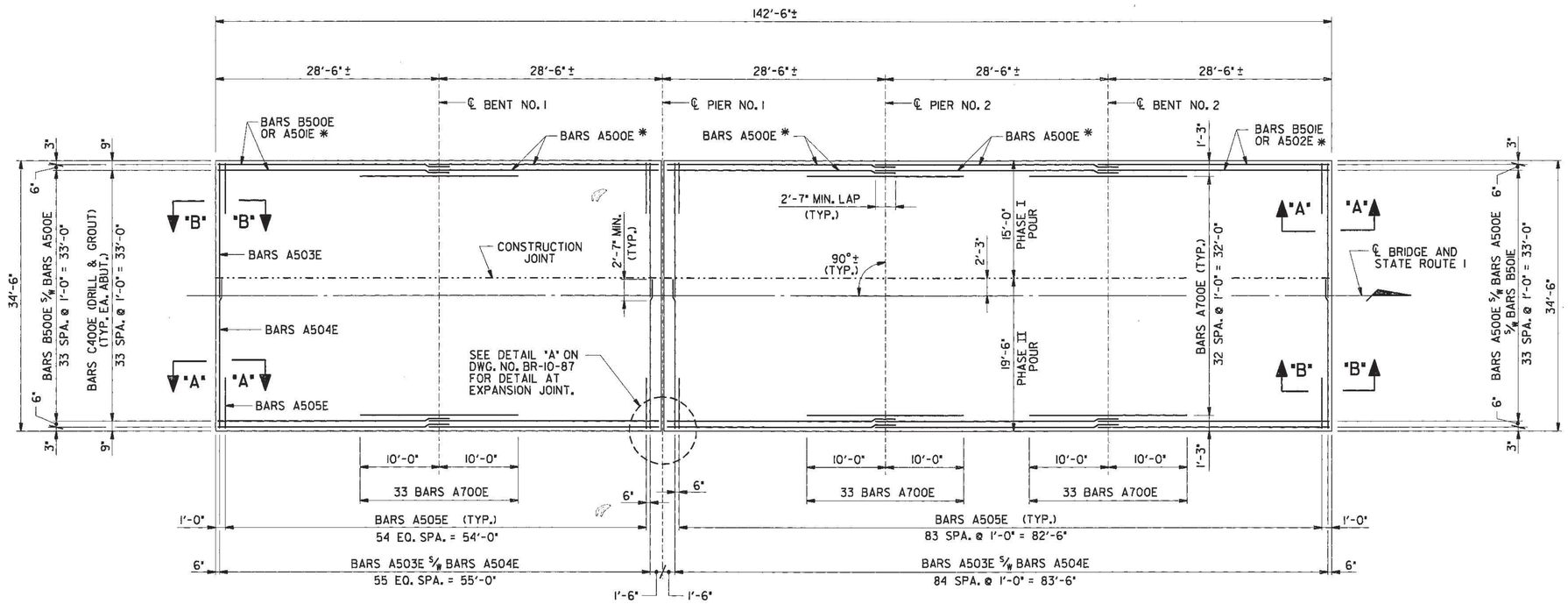

SLAB PLAN

(SHOWING REINFORCEMENT)

* DENOTES: BARS USED IN BOTTOM MAT OF REINFORCING STEEL AT CANTILEVERS. SEE DETAIL "A", THIS SHEET.

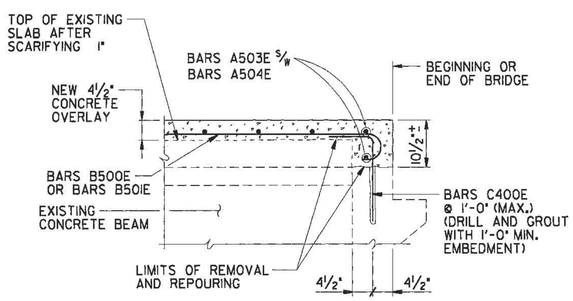

SECTION "A-A"

(SHOWING END OF SLAB REPAIR BETWEEN EXTERIOR BEAMS)

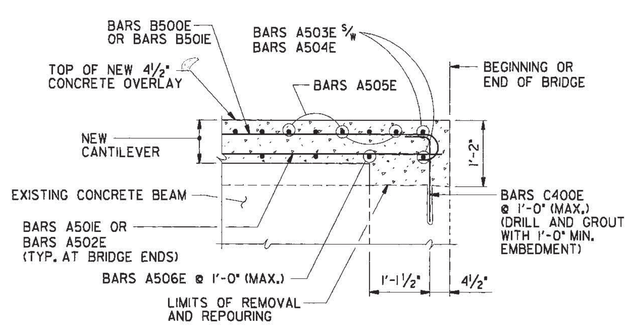

SECTION "B-B"

(SHOWING END OF SLAB REPAIR OUTSIDE EXTERIOR BEAMS)

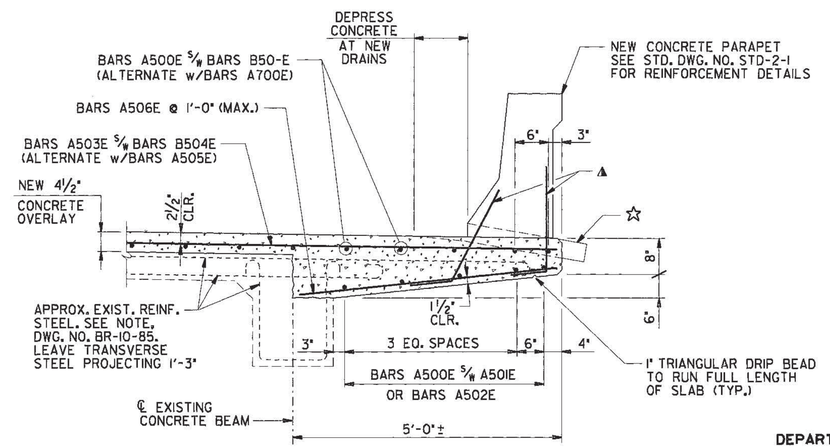

DETAIL "A"

(SHOWING CANTILEVER REINFORCEMENT)

▲ DENOTES: WHEN POURING CANTILEVERS, PROVISIONS SHALL BE MADE FOR SETTING REINFORCEMENT STEEL FOR PARAPET. THE PARAPET SHALL NOT BE POURED UNTIL THE CANTILEVERS ARE POURED AND CURED. SEE STD. DWG. NO. STD-2-1.

☆ DENOTES: NEW PARAPET DRAIN. SEE STD. DWG. NO. STD-2-3. FOR LOCATIONS SEE DWG. NO. BR-10-84.

NOTE: NEW CONCRETE SLAB CANTILEVERS SHALL BE POURED CONCURRENTLY WITH NEW 4½" CONCRETE OVERLAY AND INCLUDED IN THE QUANTITY FOR ITEM NO. 604-03.09, CLASS "D" CONCRETE (BRIDGE DECK), C.Y.

NOTE: CONTRACTOR TO TAKE EXTREME CARE WHEN REMOVING ENDS OF SLAB AT THE ABUTMENTS, SO AS NOT TO DAMAGE EXISTING LONGITUDINAL REINFORCING STEEL. ALL EXISTING REINFORCING STEEL SHALL BE COMPLETELY CLEANED BEFORE POURING NEW CONCRETE SLAB. COST OF CLEANING REINFORCEMENT, REMOVING AND REPOURING THE ENDS OF THE SLAB TO BE INCLUDED UNDER ITEM NO. 604-03.09, CLASS "D" CONCRETE (BRIDGE DECK), C.Y.

STATE OF TENNESSEE
DEPARTMENT OF TRANSPORTATION
BUREAU OF HIGHWAYS

SUPERSTRUCTURE DETAILS
STATE ROUTE 1
OVER
CANEY FORK RIVER
BRIDGE NO. 18-SRI-6.34
CUMBERLAND COUNTY
1994

DESIGNED BY	R. LOVETT	DATE 11/93
DRAWN BY	G. GERTH, CAD/D	DATE 11/93
SUPERVISED BY	PETRONE	DATE 11/93
CHECKED BY	WILSON, PETRONE	DATE 11/93

BR-10-86

29-JUL-1993 13:07
DS2:[1000021]29386501.DGN

PROJECT NO.	YEAR	SHEET NO.
18945-4552-04	1994	

REVISIONS

NO.	DATE	BY	BRIEF DESCRIPTION

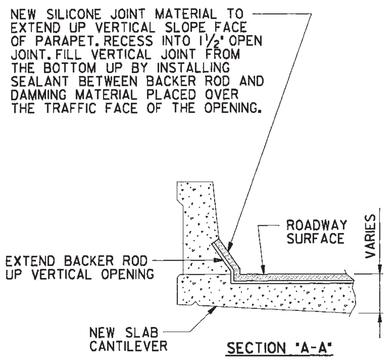

SECTION "A-A"

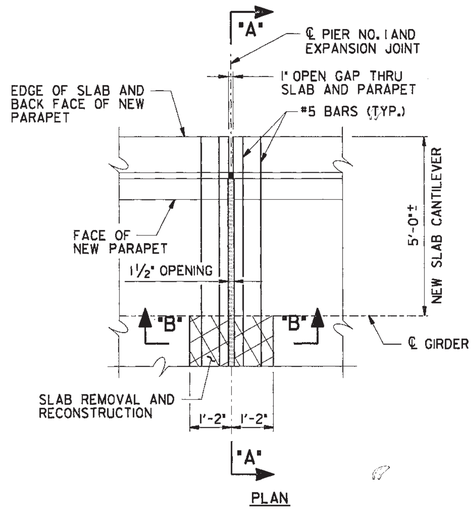

PLAN

DETAIL "A"

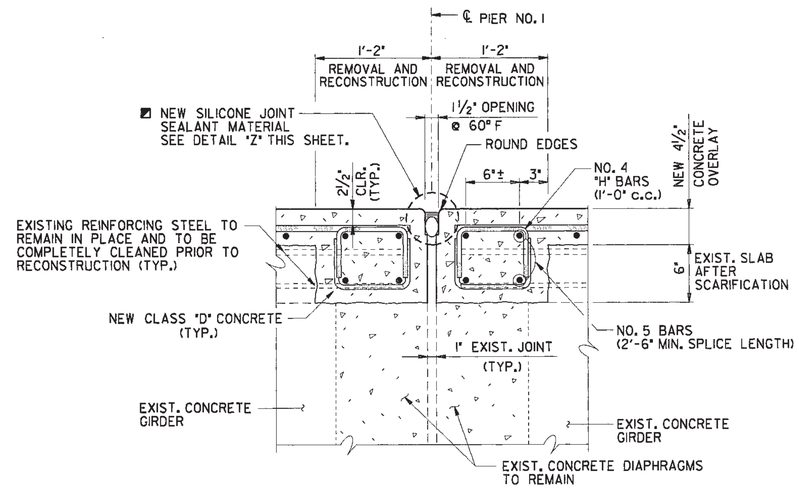

SECTION "B-B"
(TYPICAL BETWEEN EXTERIOR GIRDERS)

▲ DENOTES: LENGTH AS REQUIRED FOR PHASED CONSTRUCTION.

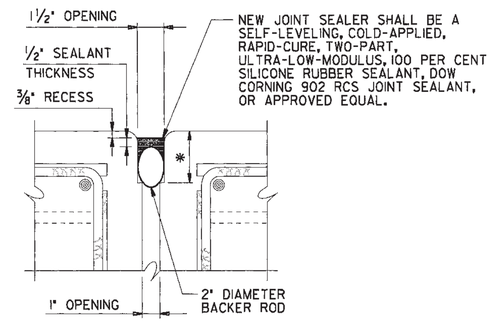

DETAIL "Z"

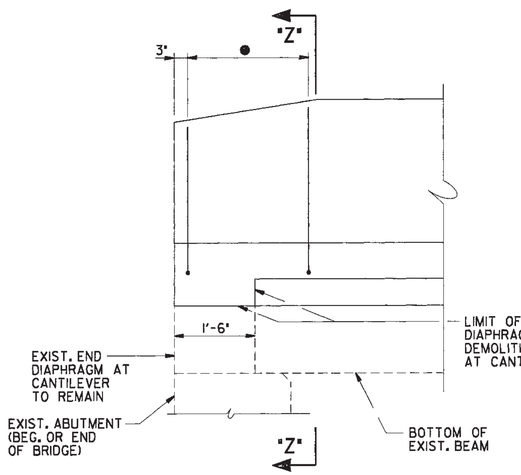

ELEVATION VIEW OF ENDPOST

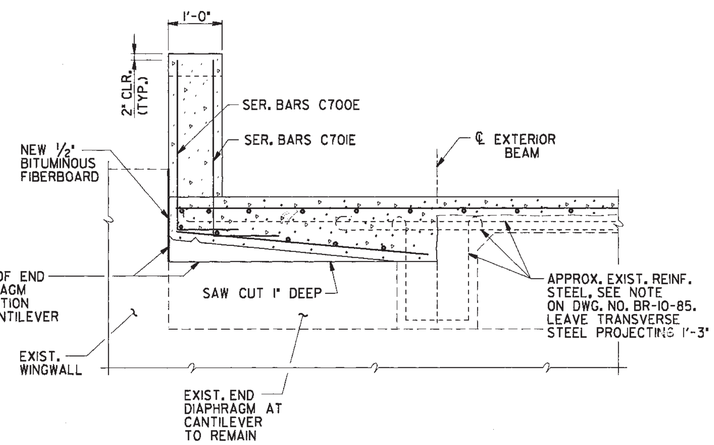

SECTION "Z-Z"

DETAIL "C"

● DENOTES: SERIES BARS C700E & C701E 6 SPA. @ 4½" = 2'-3"

NOTE: THE ENDPOST SHOWN ON STD. DWG. STD-2-1 SHALL BE MODIFIED TO BE INTEGRAL WITH SLAB AS SHOWN ABOVE. SERIES BARS A700E ARE TO BE REPLACED BY SERIES BARS C700E & C701E. COST OF THESE BARS TO BE INCLUDED IN PRICE BID FOR ITEM NO. 620-03, CONCRETE PARAPET, L.F.

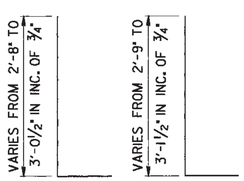

SER. BARS C700E — SER. BARS C701E

BILL OF STEEL

BAR	SIZE	NO. REQ'D.	LENGTH
A500E	5	138	30'-0"
A501E	5	10	29'-2"
A502E	5	10	30'-3"
A503E	5	141	17'-6"
A504E	5	141	19'-3"
A505E	5	278	6'-3"
A506E	5	282	4'-8"
A700E	7	99	20'-0"
C400E	4	68	2'-4"
B500E	5	36	29'-9"
B501E	5	36	30'-10"

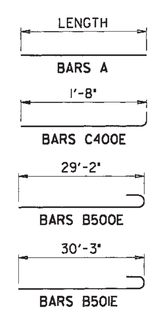

NOTE: ALL REINFORCING STEEL SHALL BE EPOXY COATED. THE COST OF EPOXY COATED REINFORCING STEEL TO BE INCLUDED IN ITEM NO. 604-10.18, REINFORCING STEEL (REPAIRS), LBS.

SPECIAL NOTE: IN DETAILS SHOWN THIS SHEET, ALL REFERENCE TO DOW CORNING 902 RCS JOINT SEALANT MATERIAL SHALL BE BID WITH THE UNDERSTANDING THAT AN EQUAL JOINT MATERIAL MAY BE SUPPLIED FOR THIS PROJECT ONLY.

NOTE: THE COST OF THE DOW CORNING 902 RCS JOINT SEALANT MATERIAL, BACKER ROD, LABOR, AND ALL INCIDENTAL MATERIALS NECESSARY FOR JOINT MATERIAL INSTALLATION AS SHOWN IN DETAILS TO BE INCLUDED IN ITEM NO. 604-10.44, EXPANSION JOINT REPAIRS, L.F.

NOTE: COST OF REMOVING EXISTING SLAB WITHIN THE LIMITS SHOWN, COMPLETELY CLEANING EXISTING REINFORCING STEEL, CLASS "D" CONCRETE (BRIDGE DECK), EPOXY COATED REINFORCING STEEL, FORMING, AND ALL MISCELLANEOUS MATERIALS NECESSARY FOR CONSTRUCTING THE NEW CONCRETE SLAB ENDS AS SHOWN SHALL BE INCLUDED IN THE PRICE BID FOR ITEM NO. 604-10.44, EXPANSION JOINT REPAIRS, L.F.

NOTE: NO. 4 "H" BARS SHALL BE OMITTED AT NEW CANTILEVERS. NO. 5 BARS SHALL EXTEND FULL WIDTH OF SLAB AND SHALL BE INCORPORATED INTO THE CANTILEVER CONSTRUCTION.

◪ NOTE: INSTALLATION OF THE DOW CORNING 902 RCS JOINT MATERIAL SHALL BE AS RECOMMENDED BY THE JOINT MANUFACTURER AND SHALL BE COMPLETED TO THE FULL SATISFACTION OF THE ENGINEER.

✱ NOTE: SPECIAL CARE SHALL BE USED TO ENSURE RECESS FOR JOINT SEALANT MATERIAL IS AS STRAIGHT AS POSSIBLE AND THE CORRECT WIDTH AND DEPTH IS MAINTAINED AS RECOMMENDED BY THE MANUFACTURER OF JOINT SEALANT MATERIAL. THE THICKNESS OF SEALANT MATERIAL PLACED ABOVE BACKER ROD SHALL NOT EXCEED ½" AS SHOWN IN DETAIL "Z".

STATE OF TENNESSEE
DEPARTMENT OF TRANSPORTATION
BUREAU OF HIGHWAYS

SUPERSTRUCTURE DETAILS
STATE ROUTE 1
OVER
CANEY FORK RIVER
BRIDGE NO. 18-SR1-6.34
CUMBERLAND COUNTY
1994

DESIGNED BY	R. LOVETT	DATE	11/93
DRAWN BY	G. GERTH, CAD/D	DATE	11/93
SUPERVISED BY	PETRONE	DATE	11/93
CHECKED BY	WILSON, PETRONE	DATE	11/93

BR-10-87

28-OCT-1993 13:13
DS2\100\00212\2\06SD3.DGN:1

SCANNED

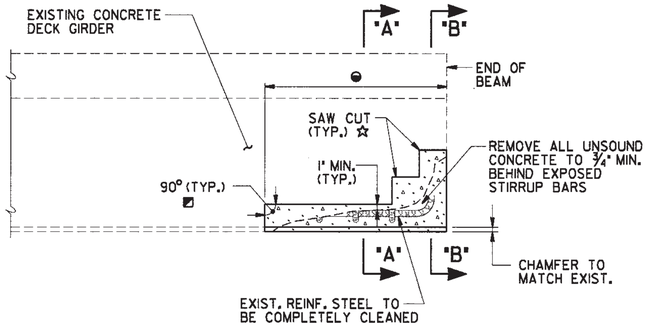

ELEVATION

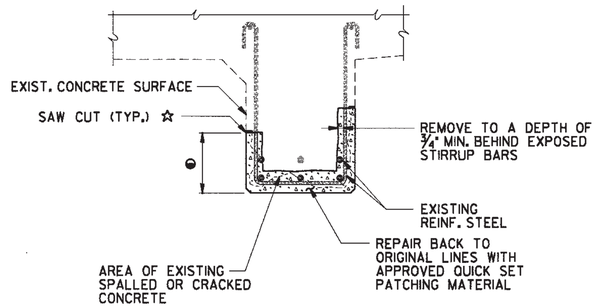

SECTION "A-A"

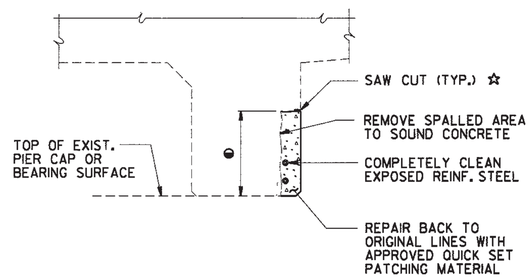

SECTION "B-B"

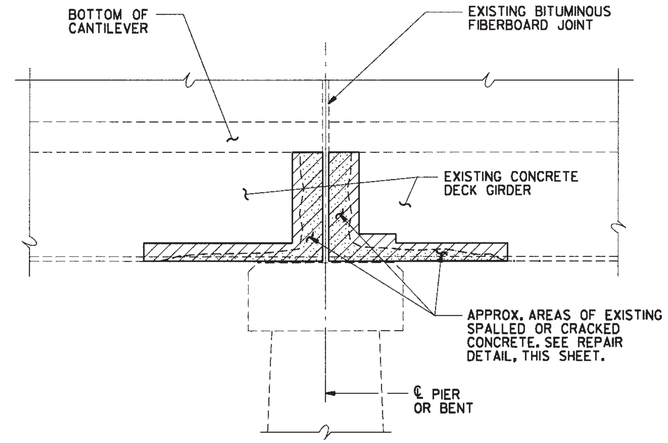

ELEVATION

PROJECT NO.	YEAR	SHEET NO.
18945-4552-04	1994	

REVISIONS

NO.	DATE	BY	BRIEF DESCRIPTION

DETAIL SHOWING AREAS OF EXISTING SPALLED CONCRETE SURFACES TO BE REMOVED AND REPAIRED

⊖ DENOTES: LIMITS AND LOCATION OF REPAIRS TO BE DESIGNATED BY THE ENGINEER.

◪ DENOTES: SAW CUT EXISTING CONCRETE SURFACES SO AS TO OBTAIN SQUARED CORNERS.

☆ NOTE: SAW CUTS IN GIRDER STEMS SHALL BE MADE AS DEEP AS PRACTICABLE UP TO A MAXIMUM OF ONE INCH. EXTREME CAUTION SHALL BE TAKEN TO PREVENT DAMAGE TO EXISTING REINFORCEMENT. APPROXIMATE CLEARANCE TO REINFORCEMENT SHALL BE DETERMINED IN THE FIELD BY THE CONTRACTOR PRIOR TO SAW CUTTING.

NOTE: PROVISIONS SHALL BE MADE DURING CONCRETE REMOVAL TO PROTECT THE EXISTING REINFORCING STEEL FROM DAMAGE. THE EXISTING REINFORCING STEEL SHALL BE COMPLETELY CLEANED AND INCORPORATED INTO THE NEW CONSTRUCTION.

NOTE: QUICK SET PATCHING MATERIAL SHALL BE A POLYMER MODIFIED, CEMENTITIOUS PATCHING MATERIAL SUCH AS SIKA TOP 123, MASTERPATCH 230 VP OR APPROVED EQUAL. CONCRETE SURFACE PREPARATION AND PATCHING MATERIAL APPLICATION SHALL BE IN ACCORDANCE WITH MANUFACTURER'S RECOMMENDATIONS.

NOTE: CHIPPING HAMMERS OF THE 15 POUND CLASS SHALL BE USED TO REMOVE UNSOUND CONCRETE FOR GIRDER REPAIRS. GIRDER REPAIRS SHALL BE IN PLACE AND PROPERLY CURED PRIOR TO THE INSTALLATION OF STRUCTURAL STEEL BEAM SUPPORTS, SEE DWG. NO. BR-10-89.

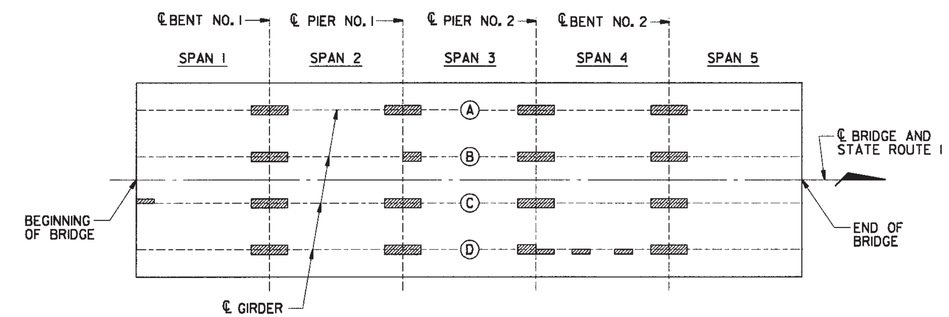

PLAN - GIRDER REPAIRS

▨ DENOTES: APPROXIMATE LOCATION OF GIRDER REPAIRS. SEE REPAIR DETAILS, THIS SHEET.

ESTIMATED GIRDER REPAIR

LOCATION OF REPAIR	ITEM NO. 604-10.54 S.F.
SPAN NO. 1	20
SPAN NO. 2	35
SPAN NO. 3	28
SPAN NO. 4	35
SPAN NO. 5	14

NOTE: THE COST OF REMOVING PORTIONS OF THE EXISTING CONCRETE WITHIN THE LIMITS SHOWN, SAW CUTTING, COMPLETELY CLEANING EXISTING REINFORCING STEEL, QUICK SET PATCHING MATERIAL, LABOR AND ALL MISCELLANEOUS MATERIAL NECESSARY TO COMPLETE THE GIRDER REPAIRS AS SHOWN SHALL BE INCLUDED IN THE PRICE BID FOR ITEM NO. 604-10.54, CONCRETE REPAIRS, S.F.

NOTE: ITEM NO. 604-10.54, CONCRETE REPAIRS, S.F. SHALL BE BID WITH THE CONTINGENCY THAT IT MAY BE INCREASED, DECREASED OR ELIMINATED AS DIRECTED BY THE ENGINEER.

NOTE: THE CONTRACTOR SHALL BE RESPONSIBLE FOR THE STABILITY OF THE STRUCTURE DURING REPAIRS TO THE GIRDERS. DETAILS OF ANY TEMPORARY SUPPORT SYSTEM OR FALSEWORK REQUIRED SHALL BE SUBMITTED TO THE ENGINEER FOR REVIEW AND SHALL MEET WITH THE FULL SATISFACTION OF THE ENGINEER BEFORE ANY GIRDER REPAIR IS BEGUN.

STATE OF TENNESSEE
DEPARTMENT OF TRANSPORTATION
BUREAU OF HIGHWAYS

SUPERSTRUCTURE DETAILS
STATE ROUTE 1
OVER
CANEY FORK RIVER
BRIDGE NO. 18-SRI-6.34
CUMBERLAND COUNTY
1994

DESIGNED BY R. LOVETT DATE 11/93
DRAWN BY G. GERTH, CAD/D DATE 11/93
SUPERVISED BY PETRONE DATE 11/93
CHECKED BY WILSON, PETRONE DATE 11/93

BR-10-88

29-NOV-1993 14:52
GS2:[1020002]2932906S02.DGN1

PROJECT NO.	YEAR	SHEET NO.
18945-4552-04	1994	

REVISIONS

NO.	DATE	BY	BRIEF DESCRIPTION

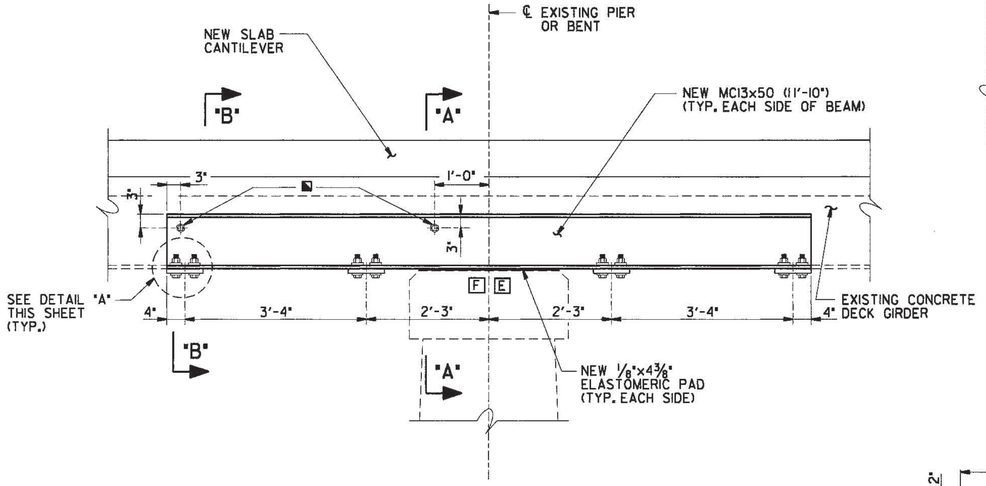

TYPICAL ELEVATION AT STEEL BEAM SUPPORT

E DENOTES: EXISTING EXPANSION SUPPORT CONDITION

F DENOTES: EXISTING FIXED SUPPORT CONDITION (SEE DWG. NO. BR-10-84 FOR SPAN LOCATIONS)

◪ DENOTES: 1"Ø x 2'-0" ROD WITH MACHINED THREADS (THREADED 4" EA. END) w/HEX NUTS AND WASHERS EACH END. HOLES DRILLED THRU THE CONCRETE BEAMS FOR THE 1"Ø RODS SHALL BE 1 1/4"Ø. HOLES DRILLED IN CHANNEL SECTIONS TO BE 1 1/8"x2 1/2" SLOTS AND SHALL NOT BE DRILLED UNTIL 1 1/4"Ø HOLES THRU CONCRETE BEAMS HAVE BEEN DRILLED. FILL HOLES THRU BEAM WITH AN APPROVED GROUT JUST PRIOR TO PLACING RODS. TIGHTEN NUTS TO A SNUG FIT AND BUFF THREADS.

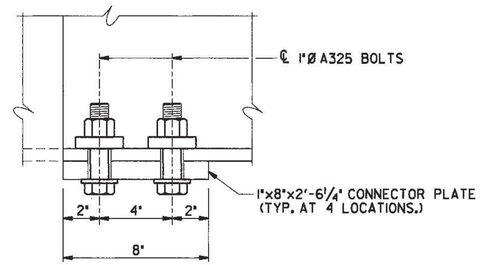

DETAIL "A"

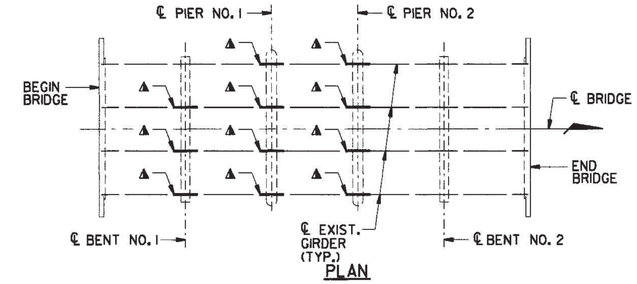

PLAN

STEEL BEAM SUPPORTS

▲ DENOTES: LOCATION OF NEW BEAM END SUPPORT (11 LOCATIONS REQ'D.)

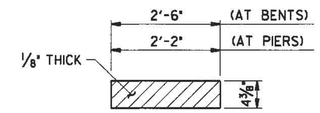

(6 REQ'D. AT BENTS)
(16 REQ'D. AT PIERS)

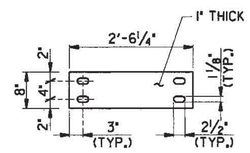

STEEL CONNECTOR PLATE

(44 REQ'D.)

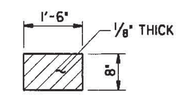

(44 REQ'D.)

ELASTOMERIC PAD DETAILS

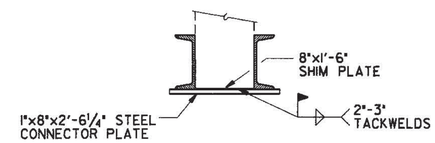

SHIM DETAIL

NOTE: CONTRACTOR SHALL BE RESPONSIBLE FOR FIELD VERIFYING MEMBER DIMENSIONS SHOWN FOR NEW STRUCTURAL STEEL PRIOR TO STEEL FABRICATION.

NOTE: COST OF ALL STRUCTURAL STEEL MEMBERS, SHIM PLATES, BOLTS WITH HEX NUTS AND WASHERS, REMOVING PORTIONS OF EXISTING CONCRETE DIAPHRAGMS, PAINTING, AND ALL MATERIALS AND LABOR NECESSARY FOR COMPLETE INSTALLATION OF THE STRUCTURAL STEEL BEAM SUPPORTS TO BE INCLUDED IN ITEM NO. 602-10.25, STRUCTURAL STEEL BEAM SUPPORTS, EA.

NOTE: CONTRACTOR SHALL SUBMIT A COMPLETE SET OF SHOP DRAWINGS FOR ALL STRUCTURAL STEEL BEAM SUPPORTS TO THE ENGINEER AND HEADQUARTERS BRIDGE INSPECTION AND REPAIR OFFICE FOR APPROVAL BEFORE ANY SHOP FABRICATION IS BEGUN.

NOTE: ALL STRUCTURAL STEEL TO BE SHOP PAINTED. SEE PAINT NOTES ON DWG. NO. BR-10-75.

NOTE: USE 8"x1'-6" STEEL SHIMS (IF REQ'D.) TO GET FULL BEARING BETWEEN TOP OF 8"x2'-6 1/4" PLATES AND BOTTOM OF BEAM. SPOT WELD SHIMS TO 1" THICK PLATES (TYP.). SHIM PLATES (IF REQ'D.) SHALL BE FURNISHED BY THE CONTRACTOR, AND WILL BE PAID FOR IN ITEM NO. 602-10.25, STRUCTURAL STEEL BEAM SUPPORTS, EA. SEE SHIM DETAIL THIS SHEET.

NOTE: PORTIONS OF EXISTING DIAPHRAGMS REMOVED FOR BEAM SUPPORT INSTALLATION, SHALL BE REPOURED TO ORIGINAL LINES WITH HIGH EARLY STRENGTH CONCRETE. PROVISIONS SHALL BE MADE TO MAINTAIN THE 3/4" EXPANSION JOINT ON BACK SIDE OF DIAPHRAGMS. COST OF REPOURING THESE AREAS SHALL BE INCLUDED IN ITEM NO. 602-10.25. SEE CONCRETE NOTE ON DWG. NO. BR-10-75.

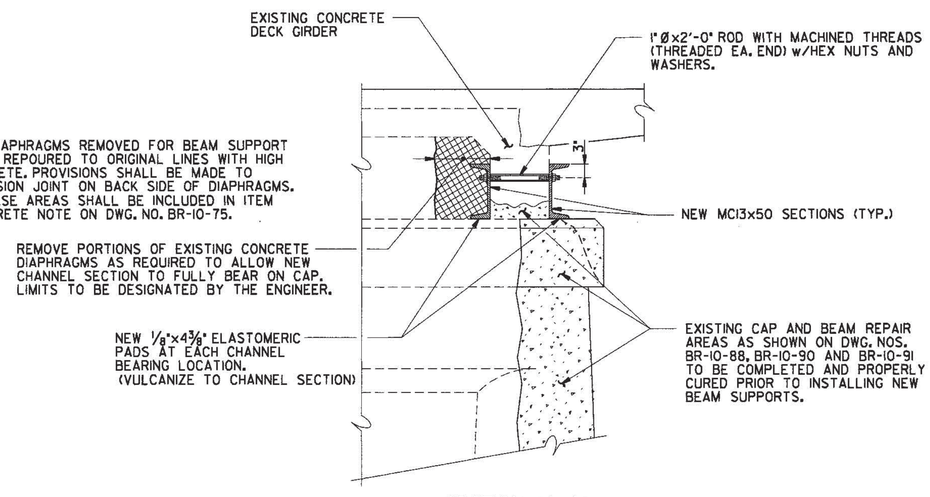

SECTION "A-A"

(INTERIOR DECK GIRDERS ARE SIMILAR)

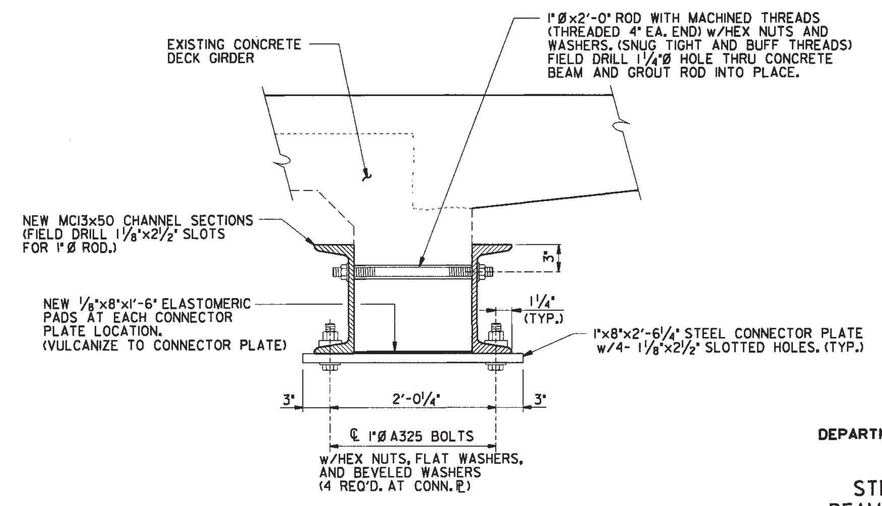

SECTION "B-B"

STATE OF TENNESSEE
DEPARTMENT OF TRANSPORTATION
BUREAU OF HIGHWAYS

STRUCTURAL STEEL
BEAM SUPPORT DETAILS
STATE ROUTE 1
OVER
CANEY FORK RIVER
BRIDGE NO. 18-SR1-6.34
CUMBERLAND COUNTY
1994

DESIGNED BY	R. LOVETT	DATE	11/93
DRAWN BY	G. GERTH, CAD/D	DATE	11/93
SUPERVISED BY	PETRONE	DATE	11/93
CHECKED BY	WILSON, PETRONE	DATE	11/93

BR-10-89

SCANNED

29-NOV-1993 14:51
DS2:10200021292306BSD.DGN1

PROJECT NO.	YEAR	SHEET NO.
18945-4552-04	1994	

REVISIONS

NO.	DATE	BY	BRIEF DESCRIPTION

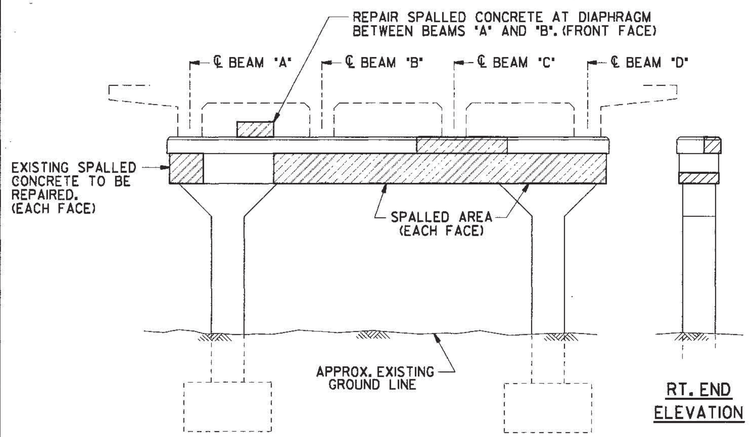

TYPICAL ELEVATION OF BENT NO. 1

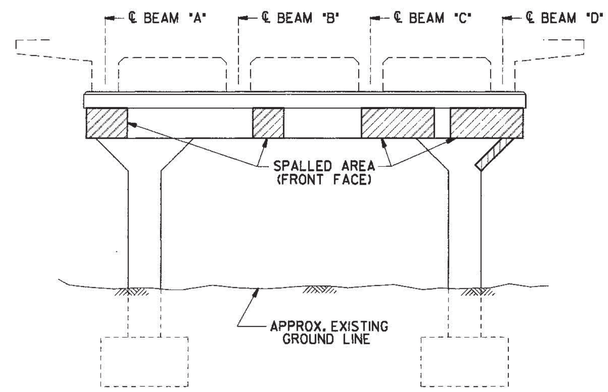

ELEVATION OF BENT NO. 2
(LOOKING FORWARD ON SURVEY)

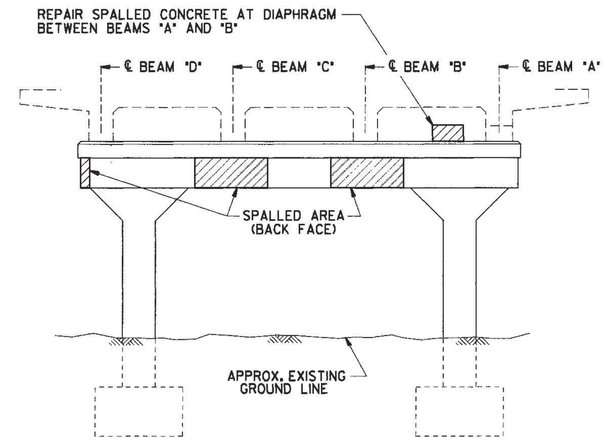

ELEVATION OF BENT NO. 2
(LOOKING BACK ON SURVEY)

▨ DENOTES: AREAS OF EXISTING SPALLED CONCRETE TO BE REPAIRED. SEE SPALL REPAIR DETAIL ON THIS SHEET. SURFACE SPALL REPAIRS TO BE PAID FOR UNDER ITEM NO. 604-10.53, CONCRETE REPAIRS, S.Y.

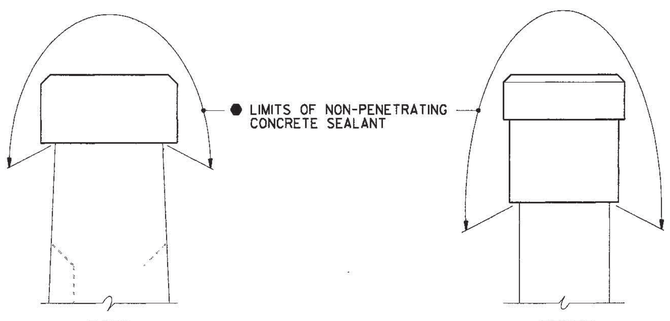

PIERS
(TYP. PIERS NO. 1 AND NO. 2)

BENTS
(TYP. BENTS NO. 1 AND NO. 2)

CONCRETE SEALANT DETAILS

● NOTE: BEFORE APPLYING ANY CONCRETE SEALER, ALL SURFACES TO BE SEALED SHALL BE COMPLETELY CLEANED OF ALL DEBRIS AND FOREIGN MATERIALS. THE SURFACE CONDITIONS OF THE CONCRETE TO BE SEALED SHALL MEET THE REQUIREMENTS OF THE SEALANT MANUFACTURER. THE THICKNESS OF THE CONCRETE SEAL SHALL BE AS RECOMMENDED BY THE SEALANT MANUFACTURER. ALL WORK MUST MEET WITH THE FULL SATISFACTION OF THE ENGINEER.

NOTE: NON-PENETRATING SEALANT SHALL BE APPLIED TO CONCRETE CAP SURFACES AFTER ALL REPAIR WORK TO PIER AND BENT CAPS HAS BEEN ACCOMPLISHED.

NOTE: THE ACCEPTABLE BRANDS OF CONCRETE SEALER SHALL BE APPROVED BY THE TENNESSEE DEPARTMENT OF TRANSPORTATION, DIVISION OF MATERIALS AND TEST. THE COLOR OF THE SEALER SHALL BE CLEAR OR SIMILAR TO THE COLOR OF THE EXISTING CONCRETE SURFACES TO BE SEALED.

NOTE: THE COST OF THE CONCRETE SEALER, COMPLETE AND IN PLACE, SHALL BE PAID FOR UNDER ITEM NO. 604-10.17, NON-PENETRATING CONCRETE SEAL, S.Y.

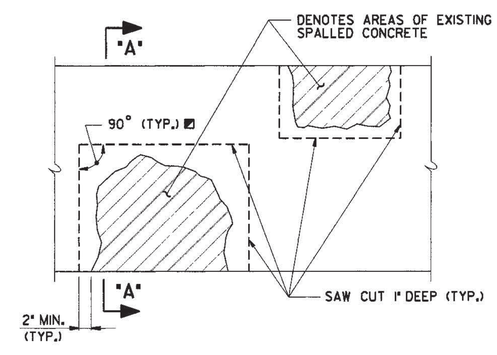

DETAIL SHOWING AREAS OF EXISTING SPALLED CONCRETE SURFACES TO BE REMOVED AND REPAIRED

◒ DENOTES: LIMITS AND LOCATION OF REPAIRS TO BE DESIGNATED BY THE ENGINEER.

◪ DENOTES: SAW CUT EXISTING CONCRETE SURFACES SO AS TO OBTAIN SQUARED CORNERS.

NOTE: THE COST OF REMOVING PORTIONS OF THE EXISTING CONCRETE WITHIN THE LIMITS SHOWN, SAW CUTTING, COMPLETELY CLEANING EXISTING REINFORCING STEEL, HIGH EARLY STRENGTH CONCRETE, FORMING, LABOR AND ALL MISCELLANEOUS MATERIAL NECESSARY TO COMPLETE THE REPAIRS AS SHOWN SHALL BE INCLUDED IN THE PRICE BID FOR ITEM NO. 604-10.53, CONCRETE REPAIRS, S.Y.

NOTE: ITEM NO. 604-10.53, CONCRETE REPAIRS, S.Y. SHALL BE BID WITH THE CONTINGENCY THAT IT MAY BE INCREASED, DECREASED OR ELIMINATED AS DIRECTED BY THE ENGINEER.

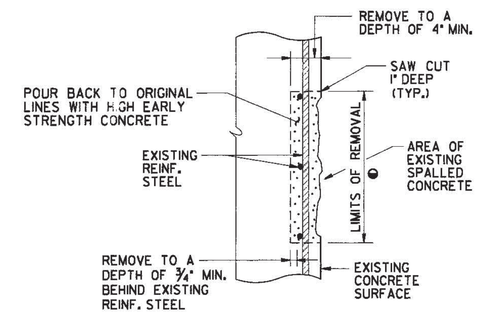

SECTION "A-A"

STATE OF TENNESSEE
DEPARTMENT OF TRANSPORTATION
BUREAU OF HIGHWAYS

BENT DETAILS
STATE ROUTE 1
OVER
CANEY FORK RIVER
BRIDGE NO. 18-SR1-6.34
CUMBERLAND COUNTY
1994

DESIGNED BY	R. LOVETT	DATE	11/93
DRAWN BY	G. GERTH, CAD/D	DATE	11/93
SUPERVISED BY	PETRONE	DATE	11/93
CHECKED BY	WILSON, PETRONE	DATE	11/93

BR-10-90

SCANNED

SCANNED

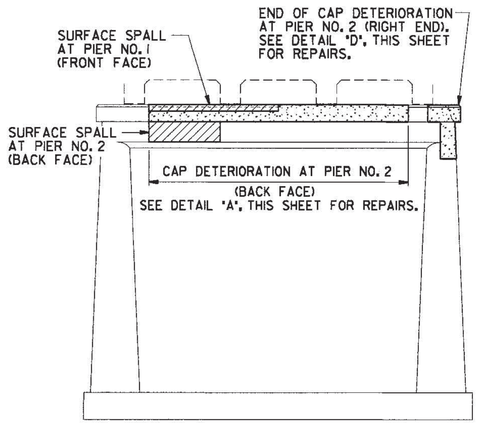

TYPICAL ELEVATION OF PIER

DENOTES: AREAS OF EXISTING SPALLED CONCRETE TO BE REPAIRED. SURFACE SPALL REPAIRS TO BE PAID FOR UNDER ITEM NO. 604-10.53, CONCRETE REPAIRS, S.Y. SEE SPALL REPAIR DETAIL ON DWG. NO. BR-10-90.

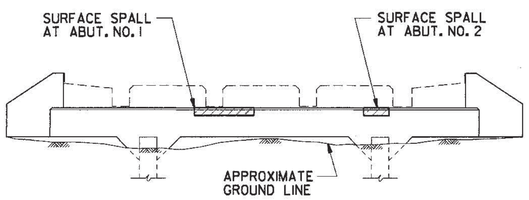

TYPICAL ELEVATION OF ABUTMENT

DENOTES: AREA OF EXISTING SPALLED CONCRETE TO BE REPAIRED. SEE SPALL REPAIR DETAIL ON DWG. NO. BR-10-90.

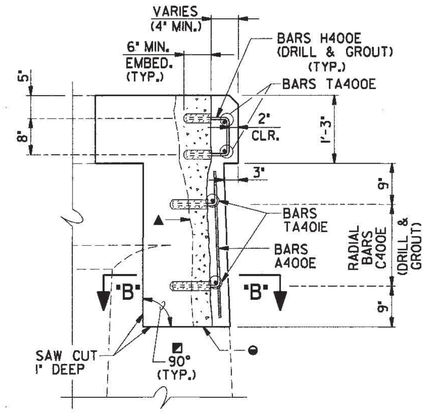

ELEVATION

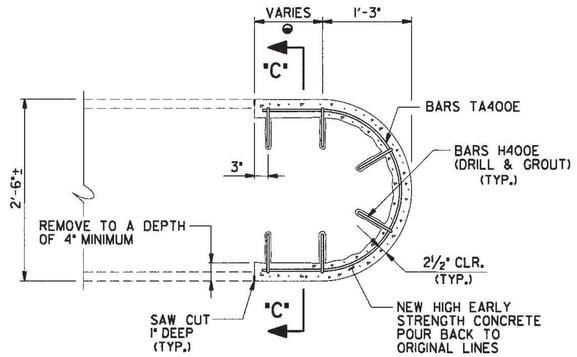

PART - PLAN OF PIER CAP

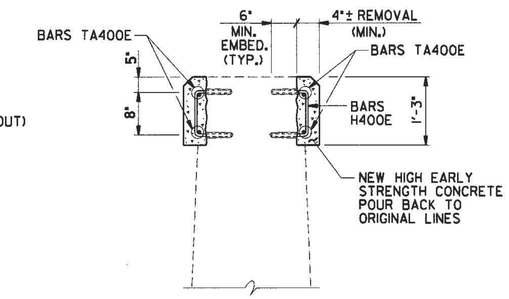

SECTION "C-C"

PROJECT NO.	YEAR	SHEET NO.
18945-4552-04	1994	

REVISIONS

NO.	DATE	BY	BRIEF DESCRIPTION

DETAIL "D"

(REPAIRS TO PIER END)

▲ DENOTES: REMOVE DETERIORATED AREA DOWN TO SOUND CONCRETE AND RECONSTRUCT END BACK TO ORIGINAL LINES WITH HIGH EARLY STRENGTH CONCRETE.

◒ DENOTES: LIMITS AND LOCATION OF REPAIRS TO BE DESIGNATED BY THE ENGINEER.

◪ DENOTES: SAW CUT EXISTING CONCRETE SURFACES SO AS TO OBTAIN SQUARED CORNERS.

NOTE: BARS USED FOR PIER REPAIRS SHALL BE FIELD CUT TO LENGTH AS REQUIRED.

NOTE: THE COST OF REMOVING PORTIONS OF THE EXISTING CONCRETE WITHIN THE LIMITS SHOWN, SAW CUTTING, COMPLETELY CLEANING EXISTING REINFORCING STEEL, HIGH EARLY STRENGTH CONCRETE, FORMING, LABOR AND ALL MISCELLANEOUS MATERIAL NECESSARY TO COMPLETE THE REPAIRS AS SHOWN SHALL BE INCLUDED IN THE PRICE BID FOR ITEM NO. 604-10.42, CONCRETE REPAIRS, C.F.

ESTIMATED REPAIRS

LOCATION OF REPAIR	ITEM NO. 604-10.42 C.F.	ITEM NO. 604-10.53 S.Y.
BENT NO. 1	--	9
PIER NO. 1	--	1
PIER NO. 2	17	1
BENT NO. 2	--	3
ABUTMENT NO. 1	--	0.5
ABUTMENT NO. 2	--	0.5

NOTE: ITEM NOS. 604-10.42 OR 604-10.53, CONCRETE REPAIRS, SHALL BE BID WITH THE CONTINGENCY THAT THESE ITEMS MAY BE INCREASED, DECREASED OR ELIMINATED AS DIRECTED BY THE ENGINEER.

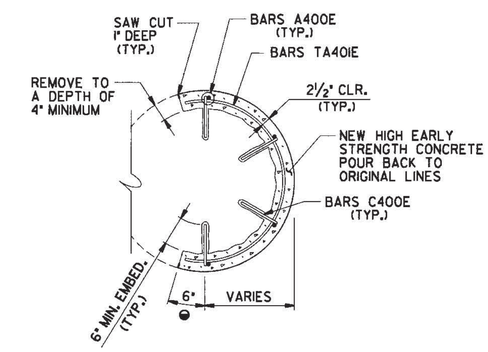

SECTION "B-B"

SUBSTRUCTURE BILL OF STEEL

BAR	SIZE	NO. REQ'D.	LENGTH
A400E	4	4	3'-0"
A500E	5	3	22'-6"
C400E	4	8	1'-6"
H400E	4	29	2'-1"
TA400E	4	2	4'-4"
TA40IE	4	2	3'-4"

NOTE: ALL REINFORCING STEEL SHALL BE EPOXY COATED. THE COST OF EPOXY COATED REINFORCING STEEL TO BE INCLUDED IN THE PRICE BID FOR ITEM NO. 604-10.18, REINFORCING STEEL (REPAIRS), LBS.

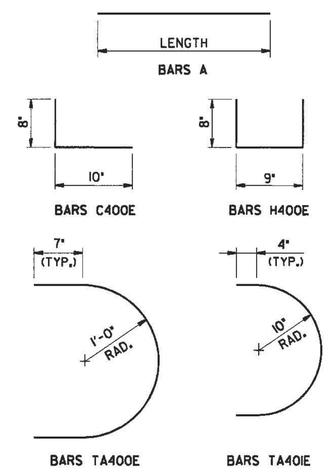

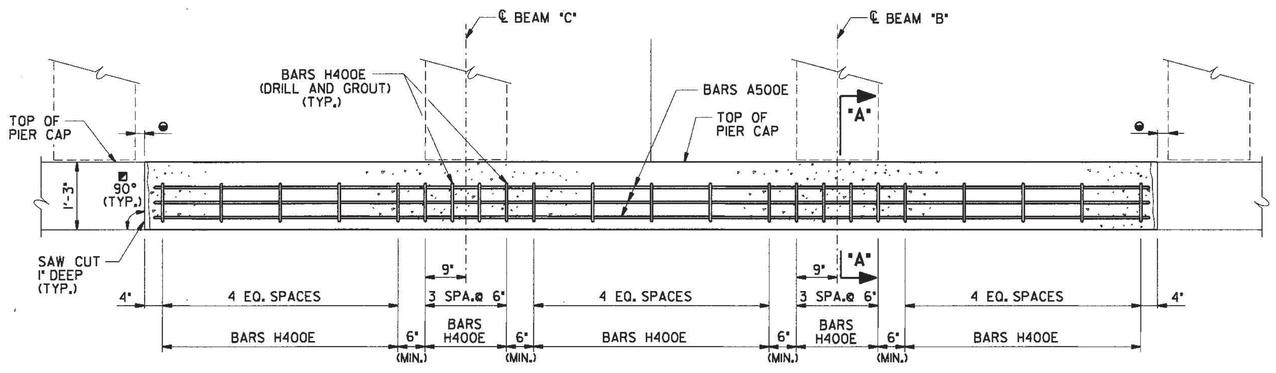

DETAIL "A"

▲ DENOTES: REMOVE DETERIORATED AREA DOWN TO SOUND CONCRETE AND RECONSTRUCT CAP BACK TO ORIGINAL LINES WITH HIGH EARLY STRENGTH CONCRETE.

◒ DENOTES: LIMITS AND LOCATION OF REPAIRS TO BE DESIGNATED BY THE ENGINEER.

◪ DENOTES: SAW CUT EXISTING CONCRETE SURFACES SO AS TO OBTAIN SQUARED CORNERS. (90° TYP.)

NOTE: THE COST OF REMOVING PORTIONS OF THE EXISTING CONCRETE WITHIN THE LIMITS SHOWN, SAW CUTTING, COMPLETELY CLEANING EXISTING REINFORCING STEEL, HIGH EARLY STRENGTH CONCRETE, FORMING, LABOR AND ALL MISCELLANEOUS MATERIAL NECESSARY TO COMPLETE THE REPAIRS AS SHOWN SHALL BE INCLUDED IN THE PRICE BID FOR ITEM NO. 604-10.42, CONCRETE REPAIRS, C.F.

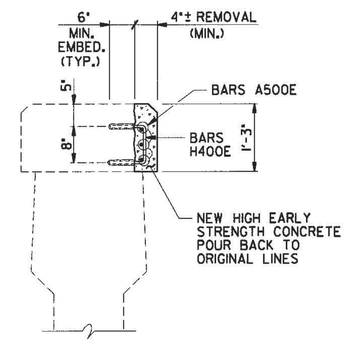

SECTION "A-A"

STATE OF TENNESSEE
DEPARTMENT OF TRANSPORTATION
BUREAU OF HIGHWAYS

PIER AND ABUTMENT DETAILS
STATE ROUTE 1
OVER
CANEY FORK RIVER
BRIDGE NO. 18-SRI-6.34
CUMBERLAND COUNTY
1994

DESIGNED BY	R. LOVETT	DATE	11/93
DRAWN BY	G. GERTH, CAD/D	DATE	11/93
SUPERVISED BY	PETRONE	DATE	11/93
CHECKED BY	WILSON, PETRONE	DATE	11/93

26-OCT-1993 11:06
GS2:[1002022]2923906APD.DGN;1

BR-10-91

FED. ROAD DIST. NO.	STATE	FED. AID PROJ. NO.	FISCAL YEAR	SHEET NO.	TOTAL SHEETS
8	TENN.		19		

E = Expansion End
F = Fixed End

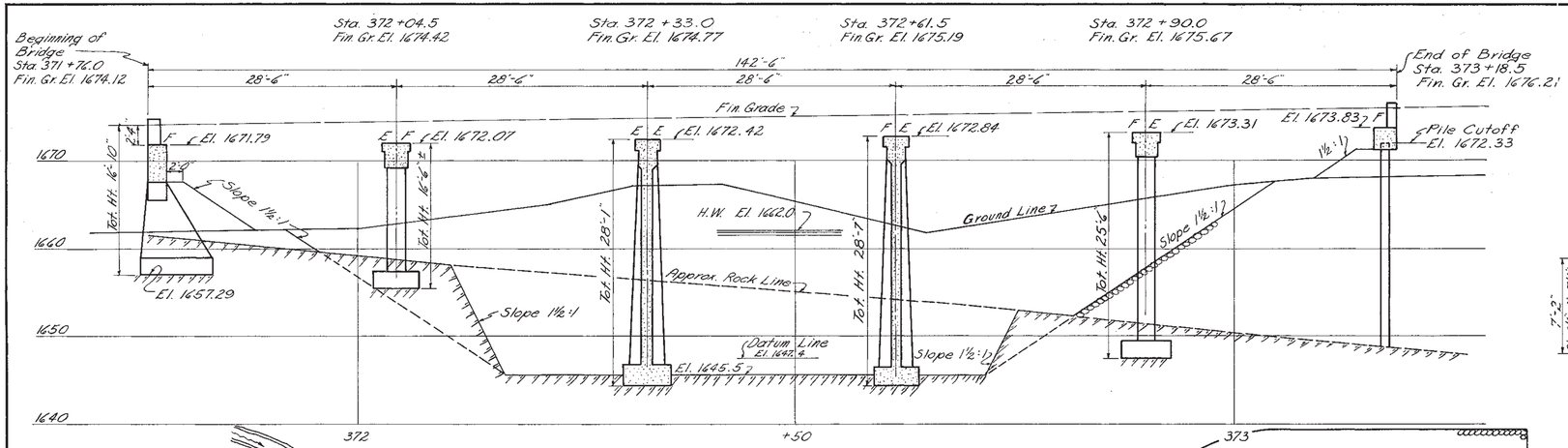

Section Along ℄ Bridge and Roadway

Note: Road Contractor to excavate Channel to El. 1645.5 as shown – See Channel Change Sketch.

Note: Piers to be set 1'-0" into Rock, Bents 6".

Note: No steel shall be ordered for Abutment 1 until Foundations have been uncovered.

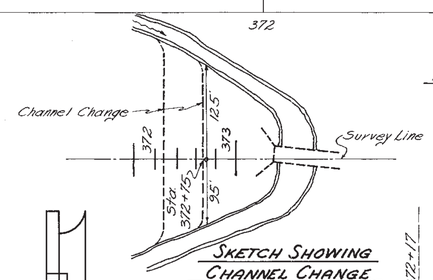

Sketch Showing Channel Change

Scale 1"=100'

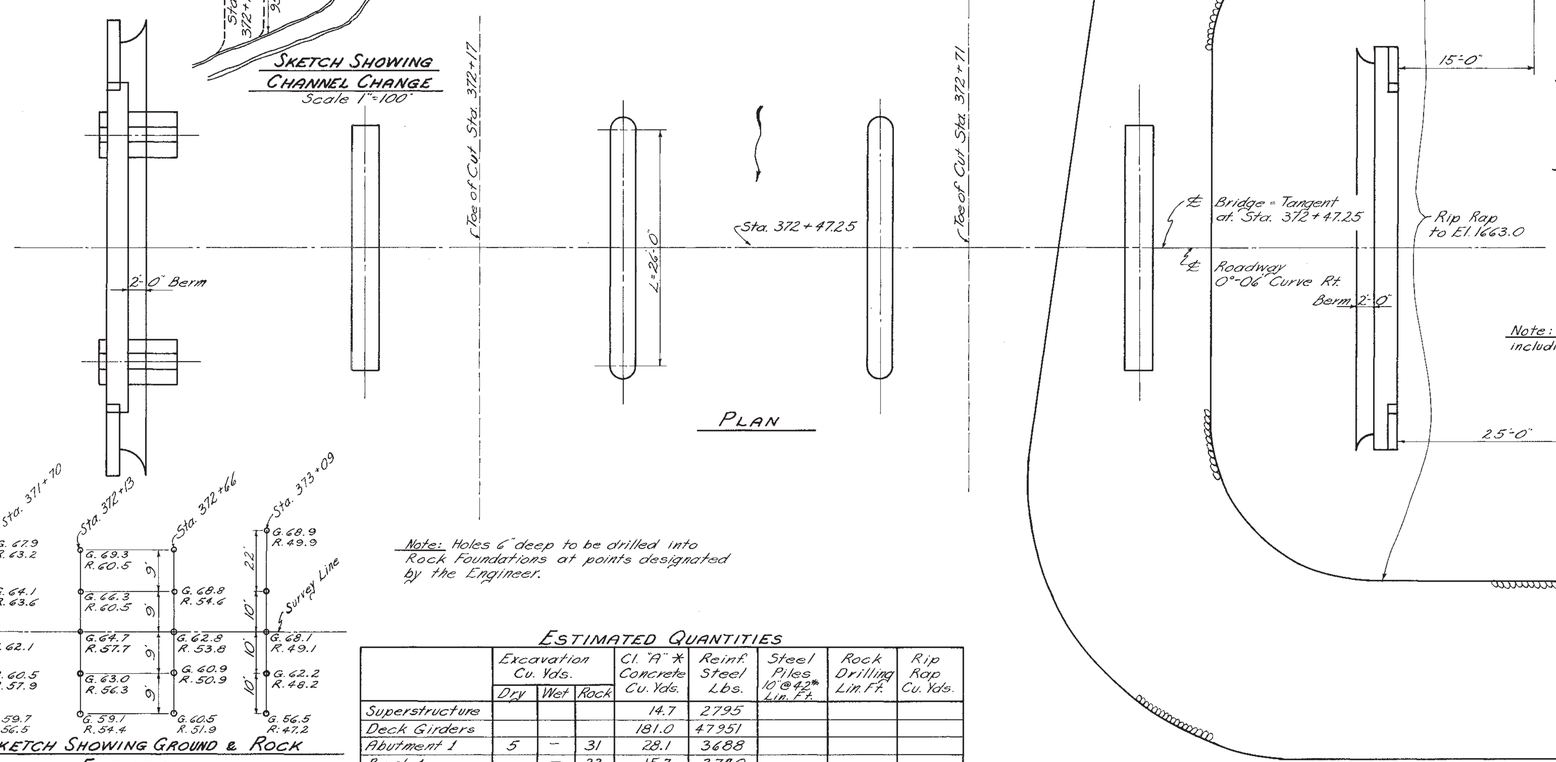

Plan

Note: Holes 6" deep to be drilled into Rock Foundations at points designated by the Engineer.

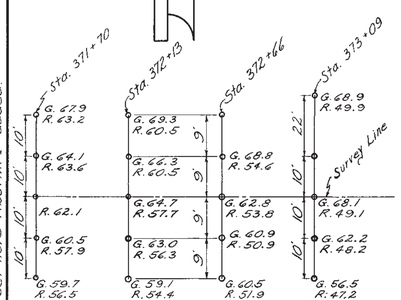

Sketch Showing Ground & Rock Elevations

Note: Fill at Abutment 2 to be in place and thoroughly compacted before piles are driven. Piles are to be driven to Rock or to a bearing of 30 Tons.

Note: Bridge to be built straight, including Curbs and Handrail.

Design Data:

Drainage Area – 15,000 Acr.
A factor of C = 0.8 in Talbot's Formula gives 1090 Sq. ft. required.
Area provided – 1150 sq. ft.

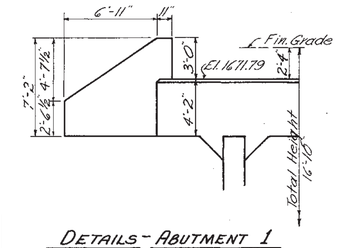

Details – Abutment 1

Build according to Dwg. F-2-113 but with changes shown above.

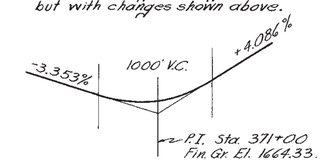

Sketch Showing Grade

General Notes:

SPECIFICATIONS: Standard Road and Bridge Specifications of the Tennessee Dept. of Highways and Public Works.

H20-S16-44 Loading.

CONCRETE: To be Cl. "A".

REINF. STEEL: See Specifications.

FORMS & FINISH: " "

ROCK FOUNDATION: " "

RIP RAP: " "

Piles in Abutment 2 to be Steel Piles 10" @ 42#. See note at bottom of this sheet.

Note: Drain pipes to be omitted over Fill and Rip Rap. 32 Pipes required.

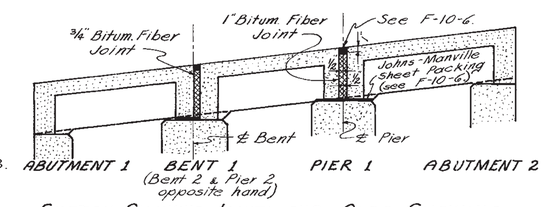

Sketch Showing Joints and Also Showing Blocks Under Beam Stems to Obtain Level Bearings

List of Drawings

List of Drawings	Dwg. No.
HANDRAIL –	E-12-105
DECK GIRDERS – 26' Clear Span. See also details on Layout Sheet.	F-10-6
ABUTMENT 1 – Type "B" Buttress. See also details on Layout Sheet.	F-2-113
* BENTS 1 & 2 – Type "B" Footing.	C-4-143
PIER 1 – L=26'-0", Tot. Ht.=28'-1" "A"=4'-0½", B=5'-0½". Use Steel for 28'-7" tot. ht.	F-10-14
PIER 2 – L=26'-0", Tot. Ht.=28'-7"	F-10-14
** ABUTMENT 2 –	F-2-65
PILES –	F-2-118

* Disregard Steel Plates shown on C-4-143.
** Omit Pile Caps shown on F-2-65.

28'-0" Roadway with Safety Curbs

Estimated Quantities

	Excavation Cu. Yds. Dry	Wet	Rock	Cl. "A" * Concrete Cu. Yds.	Reinf. Steel Lbs.	Steel Piles 10" @ 42# Lin. Ft.	Rock Drilling Lin. Ft.	Rip Rap Cu. Yds.
Superstructure				14.7	2795			
Deck Girders				181.0	47951			
Abutment 1	5	–	31	28.1	3688			
Bent 1		–	23	15.7	2740			
Pier 1		–	13	57.6	2684			
Pier 2		–	13	58.7	2684			
Bent 2	43	–	25	18.3	3009			
Abutment 2		–		11.0	1061	138		130
Totals	48	–	105	385.1	66612	138 ✠	72	130

Lump sum for complete removal of Present Bridge – 2 Concrete Spans @ 39'-0", 20' Roadway, Concrete Abutments and Pier.

* Rubbing Note: The Contractor's attention is especially called to the special Provision on finishing concrete. This provision eliminates rubbing except in the few cases specified.

✠ Note: 12" cast in place Steel Shell Piles or Precast Concrete Piles may be substituted for the 10" Steel Piles.

STATE OF TENNESSEE
DEPARTMENT OF HIGHWAYS AND PUBLIC WORKS
NASHVILLE

LAYOUT OF BRIDGE

CANEY FORK CREEK
STA. 371+76.0
CUMBERLAND COUNTY
1956

CORRECT: Fred Greene — BRIDGE ENGINEER
APPROVED: Herbert M. Gates — STATE HIGHWAY ENGINEER

F-12-94

DESIGNED BY _____ DATE _____
DRAWN BY M. Shurman DATE 11-14-56
RETRACED BY Charles Walworth DATE 7-3-57
CHECKED BY _____ DATE _____

Revised 2-7-57 R.R. Rip Rap cut - Abutm. 1
Pile note added.
Steel note Abutm. 1 added.

FED. ROAD DIST. NO.	STATE	FED. AID PROJ. NO.	FISCAL YEAR	SHEET NO.	TOTAL SHEETS
8	TENN.		19	15	113

F-65-1(8)

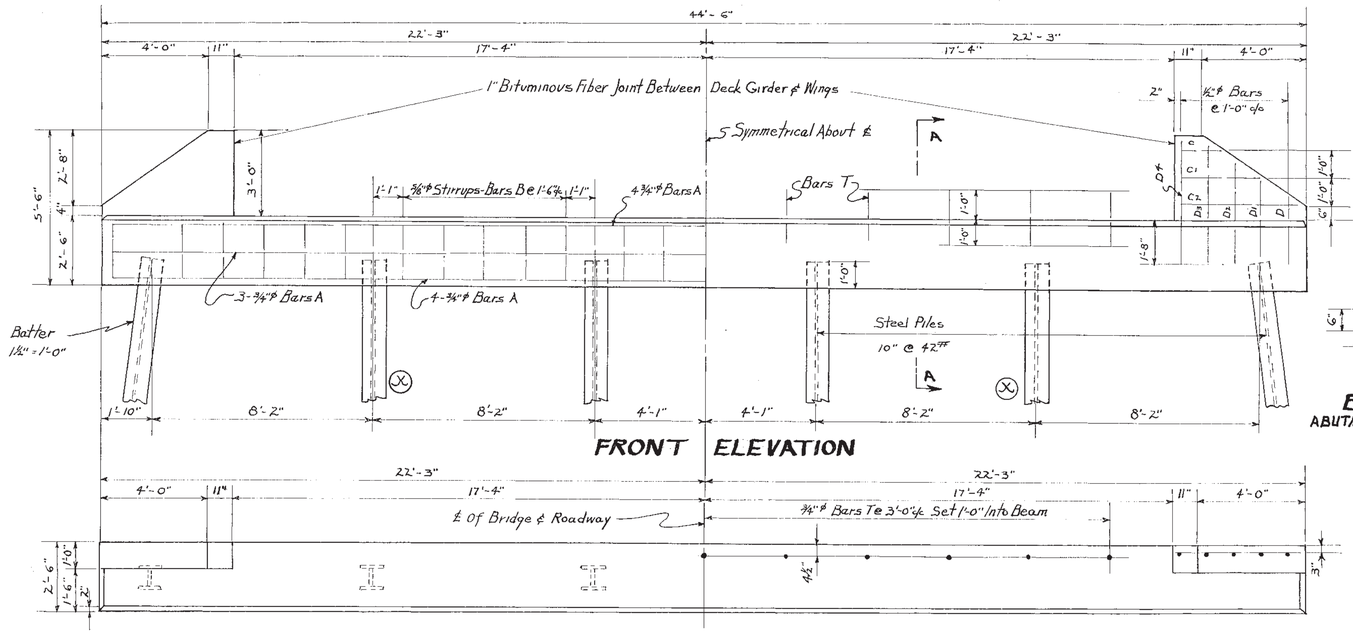

FRONT ELEVATION

PLAN

ABUTMENT

Note: Piles Marked ⊗ To Be Battered 2":12" See End Elevation

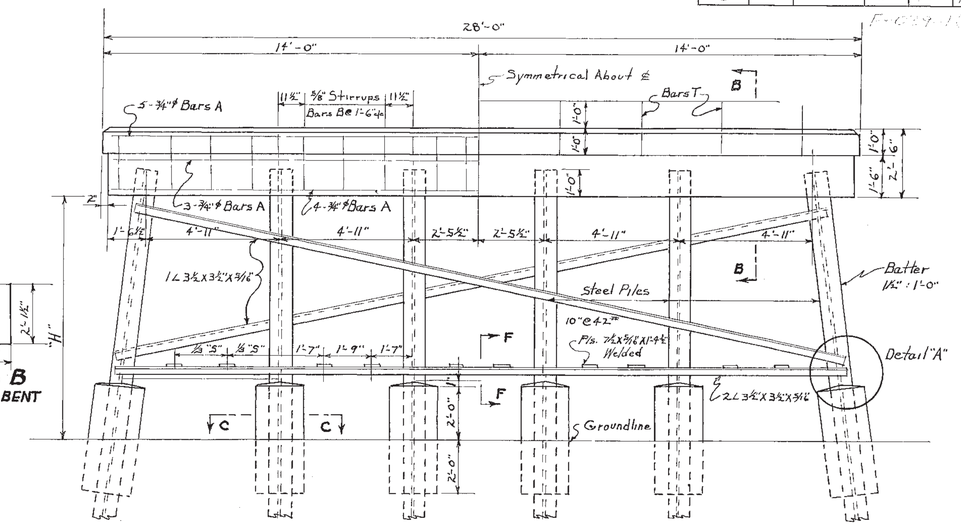

FRONT ELEVATION

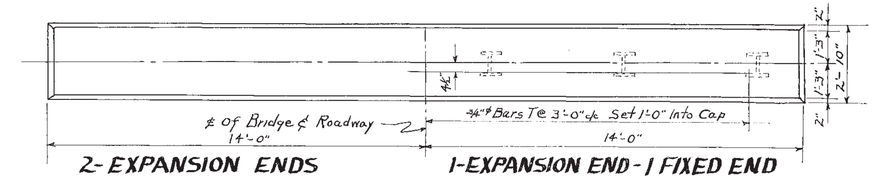

2-EXPANSION ENDS 1-EXPANSION END - 1 FIXED END

PLAN

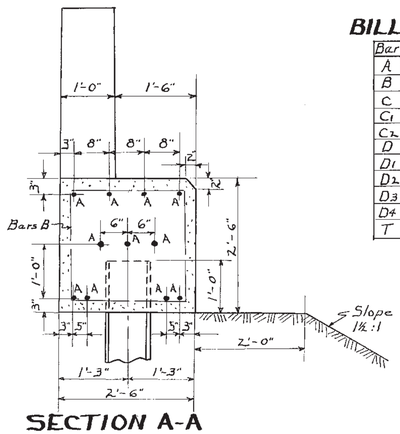

SECTION A-A

BILL OF STEEL

Bar	No	Size	Length
A	11	¾"ϕ	44'-0"
B	27	⅜"ϕ	9'-6"
C	2	½"ϕ	1'-3"
C1	2	"	2'-9"
C2	2	"	4'-3"
D	2	"	2'-3"
D1	2	"	3'-0"
D2	2	"	3'-9"
D3	2	"	4'-3"
D4	2	½"ϕ	4'-6"
T	11	¾"ϕ	2'-0"

ESTIMATED QUANTITIES

Concrete Class "A" 11.0 Cu. Yds.
Reinforc. Steel 1,061 Lbs.

GENERAL NOTES

Specifications: Standard Road & Bridge Specifications Of The Tennessee Department Of Highways & Public Works.
Loading: H20 S16-44
Concrete To Be Class "A"
Reinforcing Steel: See Specifications
Forms & Finish: See Specifications

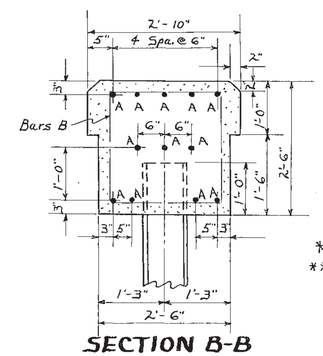

SECTION B-B

BENT

BILL OF STEEL

Bar	No	Size	Length
A	12	¾"ϕ	27'-2"
B	17	⅜"ϕ	9'-6"

Note: For Each Fixed End Add 9-¾"ϕ Bars T x 2'-0"

ESTIMATED QUANTITIES

* Concrete Class "A" 9.7 Cu. Yds.
** Reinforcing Steel 657 Lbs.
*** Structural Steel See Quantities On Layout Sheet
* Includes Encasement
** For Each Fixed End Add 27 Lbs. Reinf. Steel
*** Bracing Only

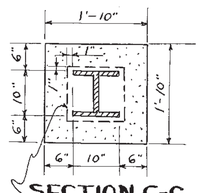

SECTION C-C

Note: Wrap pile with American Welded Fabric 2"x2" No. 10 Wire. Cost to be included in the unit price bid for class "A" concrete.

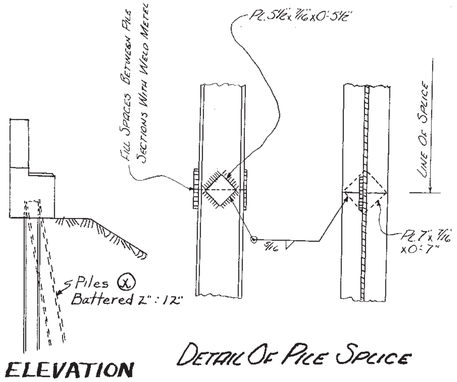

END ELEVATION

DETAIL OF PILE SPLICE

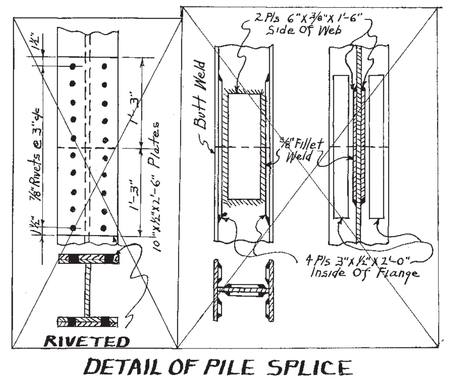

DETAIL OF PILE SPLICE

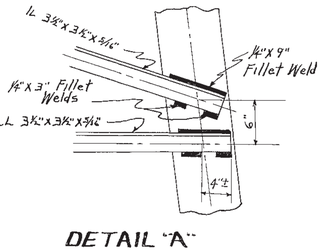

DETAIL "A"

Welds typical for all End Joints and Intersections

Note: No Bracing Required When "H" Is Less Than 10'

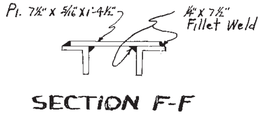

SECTION F-F

STATE OF TENNESSEE
DEPARTMENT OF HIGHWAYS AND PUBLIC WORKS
NASHVILLE
STANDARD

ABUTMENT AND BENT

STEEL PILE BENT TYPE
28'-0" ROADWAY WITH SAFETY CURBS
26'-0" CLEAR SPANS
1954

DESIGNED BY
DRAWN BY W. Suter DATE 8/17/54
RE TRACED BY Roy DATE 7/8/58
CHECKED BY

CORRECT Fred Greene BRIDGE ENGINEER
APPROVED Johnson G. McCarter STATE HIGHWAY ENGINEER

F-2-65

Revised 11-14-56: Wingwall Dimensions Changed Battered Piles Added
Revised 10-16-57 Piles Added · Pile Caps Out

MICROFILMED

FED ROAD DIST NO	STATE	FED AID PROJ NO	FISCAL YEAR	SHEET NO	TOTAL SHEETS
8	TENN.		19	17	17

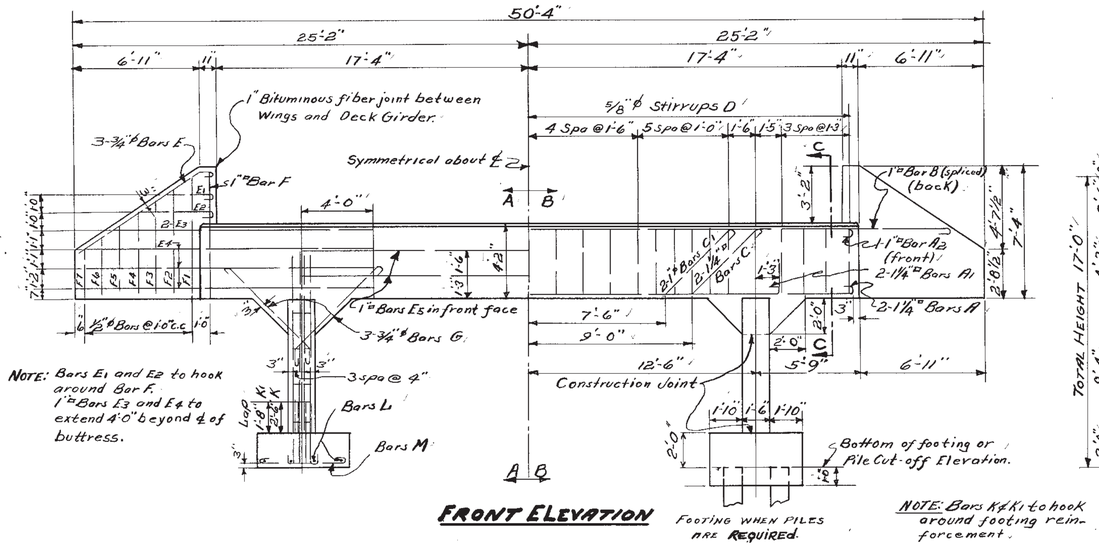

NOTE: Bars E1 and E2 to hook around Bar F. 1"□ Bars E3 and E4 to extend 4'-0" beyond ℄ of buttress.

NOTE: Bars K & K1 to hook around footing reinforcement.

FRONT ELEVATION

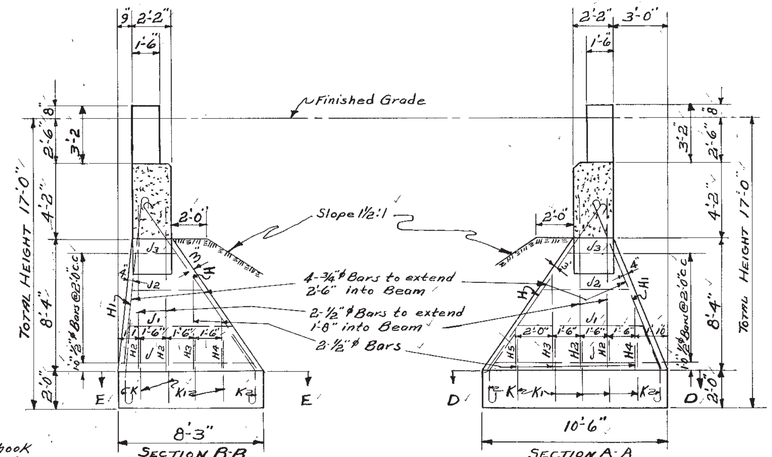

SECTION B-B
Type "B" Buttress for Concrete Piles. Foundation pressure 9000#/□'

SECTION A-A
Type "A" Buttress for Timber Piles. Foundation pressure 5000#/□'

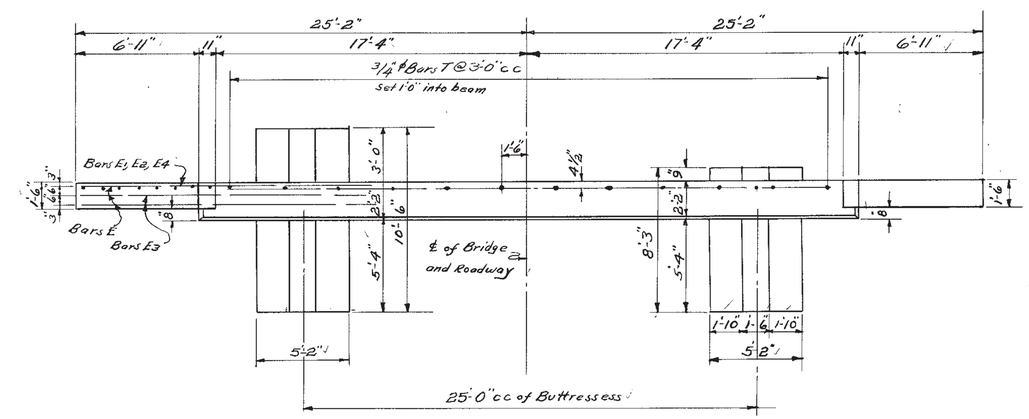

Type "A" Buttress

Type "B" Buttress

PLAN

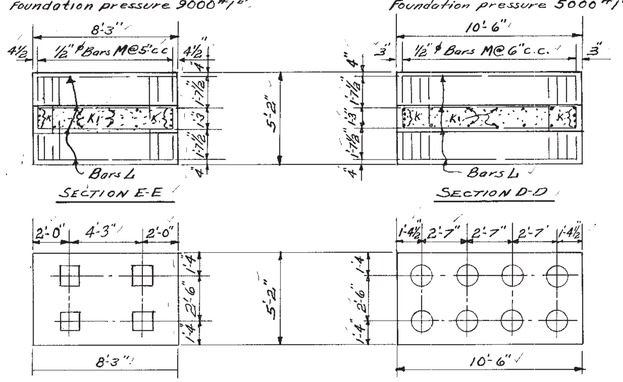

SECTION E-E

SECTION D-D

PILE PLAN CONCRETE PILES
Load per Pile 27 Tons

PILE PLAN - TIMBER PILES
Load per Pile 15 Tons

BILL OF STEEL

BEAM & WINGS
Same for both Buttress Types

BAR	Nº	SIZE	LENGTH
A	2	1 1/4"□	38'-0"
A1	2	1 1/4"□	29'-6"
A2	1	1"□	37'-8"
B	2	1"□	25'-7"
C	2	1 1/4"□	30'-4"
C1	2	1"ϕ	26'-0"
D	27	5/8"ϕ	12'-4"
E	6	3/4"ϕ	9'-0"
E1	2	1/2"ϕ	2'-9"
E2	2	1/2"ϕ	4'-3"
E3	4	1"□	14'-6"
E4	6	1"□	16'-3"
E5	2	1"□	25'-0"
F	2	1"□	7'-0"
F1	2	1/2"ϕ	6'-6"
F2	2	"	5'-9"
F3	2	"	5'-3"
F4	2	"	4'-6"
F5	2	"	4'-0"
F6	2	"	3'-3"
F7	2	1/2"ϕ	2'-6"
G	12	3/4"ϕ	8'-9"
T	12	3/4"ϕ	2'-0"

BUTTRESSES & FOOTINGS

BAR	SIZE	Type "A" Nº	Type "A" LENGTH	Type "B" Nº	Type "B" LENGTH
H	3/4"ϕ	8	13'-0"	8	13'-0"
H1	3/4"ϕ	8	12'-0"	8	11'-6"
H2	1/2"ϕ	8	10'-0"	8	10'-0"
H3	"	4	6'-0"	4	6'-0"
H4	"	4	4'-0"	4	3'-6"
H5	1/2"ϕ	4	3'-9	-	—
J	1/2"ϕ	2	22'-0"	2	17'-11"
J1	"	2	18'-0"	2	15'-0"
J2	"	2	14'-0"	2	12'-1"
J3	1/2"ϕ	2	10'-0"	2	9'-2"
K	3/4"ϕ	16	4'-11"	16	4'-11"
K1	1/2"ϕ	20	3'-10"	16	3'-10"
L	1/2"ϕ	8	10'-2"	8	7'-11"
M	1/2"ϕ	42	5'-7	38	5'-7"

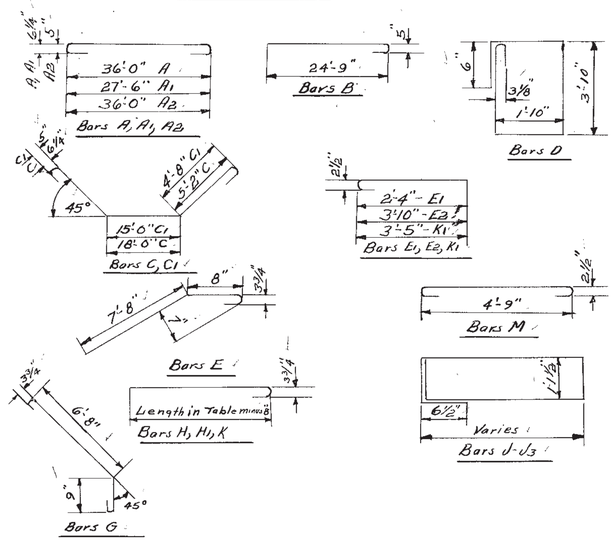

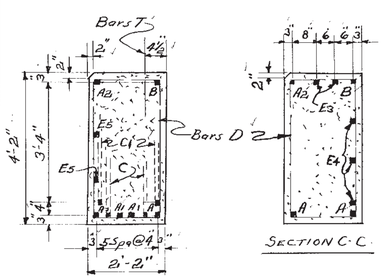

PART SECTION A-A

SECTION C-C

GENERAL NOTES:

Specifications: Standard Road and Bridge Specifications of the Tennessee Department of Highways and Public Works.

Concrete shall be Class "A".
Reinforcing Steel See Specifications.
Forms and Finish: See Specifications.

ESTIMATED QUANTITIES

	Concrete Class "A" Cu. yds. Without Piles	Concrete Class "A" Cu. yds. With Piles	Reinforcing Steel Lbs
Type "A"	31.0	34.6	3754
Type "B"	28.2	30.9	3088

STATE OF TENNESSEE
DEPARTMENT OF HIGHWAYS AND PUBLIC WORKS
NASHVILLE

STANDARD CONCRETE ABUTMENT
OPEN TYPE

28'-0" ROADWAY WITH SAFETY CURBS

26'-0" CLEAR SPAN
17'-0 TOTAL HEIGHT

1956

CORRECT: Fred Grace
BRIDGE ENGINEER

APPROVED: Charles L. Bates
STATE HIGHWAY ENGINEER

DESIGNED BY ____ DATE ____
DRAWN BY GRIFFIN DATE 11-20-51
TRACED BY W. Heed DATE 1-31-56
CHECKED BY ____ DATE ____

F-2-113

MICROFILMED

I-24-3(15)128

FED ROAD DIST NO	STATE	FED AID PROJ NO	FISCAL YEAR	SHEET NO	TOTAL SHEETS
8	TENN		19	87	

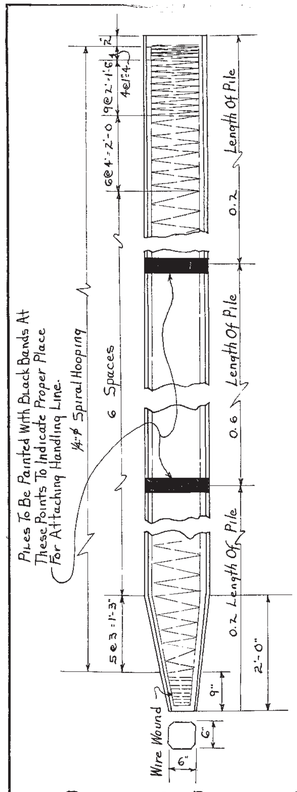

DETAIL OF PRECAST CONCRETE PILE

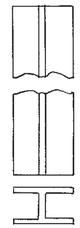

STEEL PILES

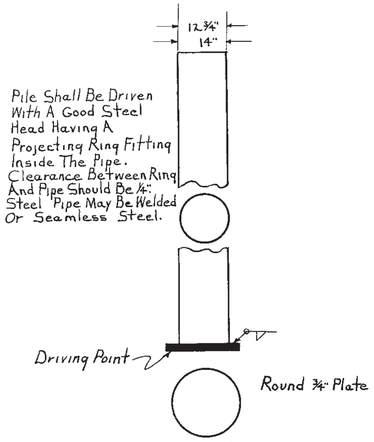

PIPE PILE

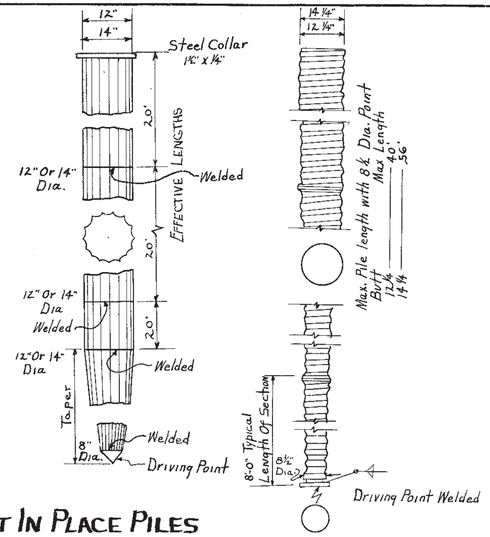

CAST IN PLACE PILES

STEP TAPER PILE

NOTE: CONCRETE IN CASTIN PLATE PILES TO BE CLASS A

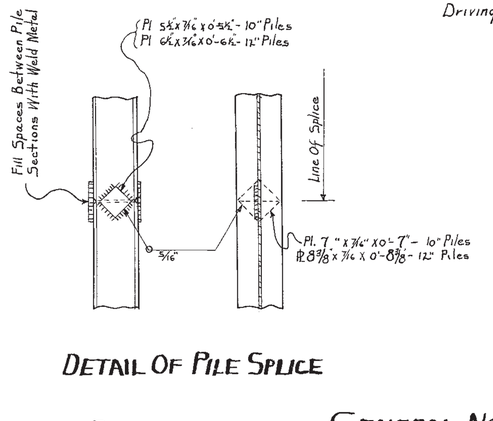

DETAIL OF PILE SPLICE

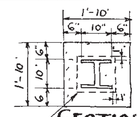

SECTION X-X

NOTE. Wrap Pile With American Welded Fabric 2" x 2" No. 10 Wire

NOTE. When H is 10' And More Bracing On Bents Is Required.

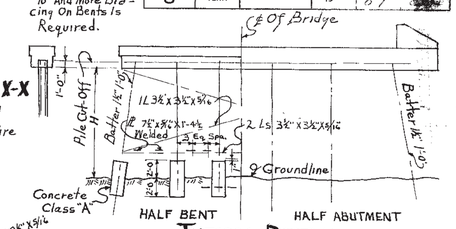

TYPICAL DETAIL

WHEN STEEL PILES MAY BE SUBSTITUTED FOR PRECAST CONCRETE PILES

(Number Of Steel Piles Same As Number Of Concrete Piles)

NOTE: If the contractor elects to use steel piles in lieu of the concrete piles, the cost of encasing concrete blocks at ground lines and cost of bracing - if required - shall be included in the price per lin ft. of piles.

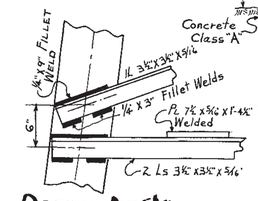

DETAIL AT "A"

WELDS TYPICAL FOR ALL END JOINTS AND INTERSECTIONS

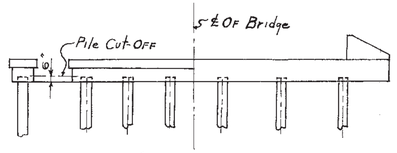

TYPICAL DETAIL

WHEN PRECAST CONCRETE PILES MAY BE SUBSTITUTED FOR STEEL PILES

(Number Of Concrete Piles Same As Number Of Steel Piles.)

GENERAL NOTES

SPECIFICATIONS: Standard Road & Bridge Specifications Of The Tennessee Department Of Highways And Public Works.

CHOICE OF PILES: On Each Layout Sheet The Type Of Piles - And Any Alternate Types, If Permitted - Will Be Specified.

CAST IN PLACE: Pile Shells Shall Have A Minimum Thickness As Follows:
1. Piles Driven Without Mandrel - 7 Gage
2. Piles Driven With Mandrel Shall Be Of Sufficient Strength & Thickness To Hold Its Original Form And Show No Sign Of Distortion After The Core Has Been Withdrawn. Steel Pipe Shall Be Welded Or Seamless Steel Conforming To ASTM Designation A252-55, Grade 2 Welded And Seamless Steel Pipe Piles.

The concractor shall maintain on the job at all times prior to and during the filling of the shells, a light suitable for their inspection. Improper driven, broken or otherwise defective shells shall be removed and replaced or otherwise corrected to the satisfaction of the engineer by removal and replacement or the driving of an additional pile at no extra cost.

PILE POINTS: All cast in place piles shall be equipped with a steel driving point. Driving points shall be mill welded to the pile shell. Driving points may be either structural steel, forged steel or cast steel. Steel piles shall have a square cut end only. No driving point is required unless shown on the bridge plans

SPLICES: Splice details for cast-in-place piles shall be made in accordance with the manufactures reccomendations, subject to the approval of the engineer. Splice details for steel piles shall be in accordance with the details shown on this sheet.

DRIVING FORMULA: Piles shall be driven to a minimum capacity as specified on the layout sheet as determined by the driving formulas stipulated in the specifications.

MILL TEST REPORTS: Notarized mill test reports will be required for all steel piles and cast-in-place pile shells.

LENGTH OF PILE	LONGIT. REINF.	WT OF STEEL PER. FT.	WT. OF PILE PER. FT.
Up To 35'	4-7/8" ø Bars	9.6 Lbs	205.3 Lbs.
36' To 40'	4-1" ø "	12.2 "	205.3 "
41' To 45'	4-1 1/8" "	15.1 "	265.3 "
46' To 50'	4-1 1/8" "	18.8 "	265.3 "
51' To 55'	8-1" "	28.9 "	265.3 "
56' To 60'	8-1 1/8" "	36.2 "	265.3 "

NOTE:
In Handling The Piles, They Shall Be Supported At The Points Indicated. Piles To Be Picked Up By Pulling On Both Lines Uniformly. End Of Pile Not To Touch Ground Unless Pile Is Inclined 1:2 Or Steeper.

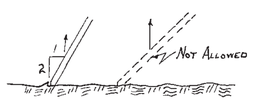

DESIGNED BY _____ DATE _____
DRAWN BY R.E. Alley DATE 5/1/56
RE-TRACED BY Roy DATE 7/8/58
CHECKED BY _____ DATE _____

Revised 7-7-59
Revised 5-4-59: For Splice Plates
Revised 7-3-58
Revised 10-17-51
Revised 7-30-56

STATE OF TENNESSEE
DEPARTMENT OF HIGHWAYS AND PUBLIC WORKS
NASHVILLE

STANDARD PILE DETAILS

CORRECT Fred Greene
BRIDGE ENGINEER

APPROVED Herbert S. Bates
STATE HIGHWAY ENGINEER

F-2-118

FED ROAD DIST. NO.	STATE	FED AID PROJ NO	FISCAL YEAR	SHEET NO	TOTAL SHEETS
3	TENN.		19		

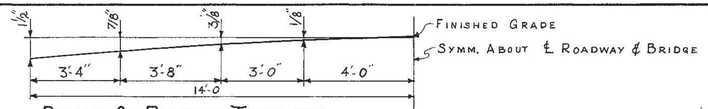

DETAIL OF ROADWAY TEMPLATE

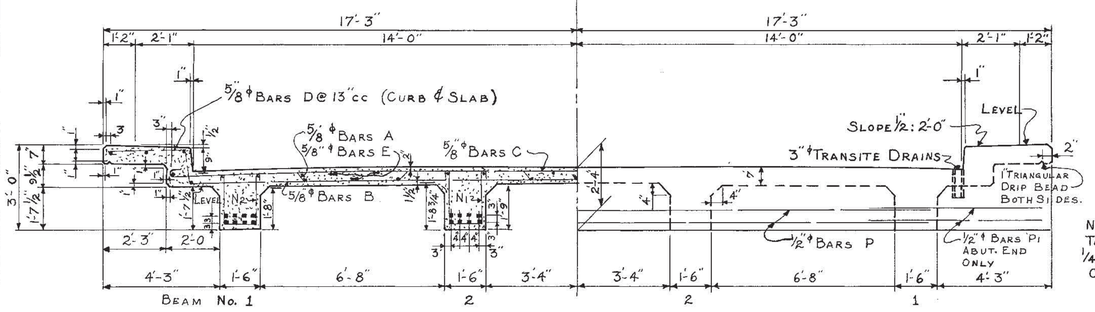

SECTION A-A

HALF END ELEVATION-ABUTMENT

NOTE: TOP OF DRAIN TO BE DEPREESSED 1/4" BELOW TOP OF CONCRETE:

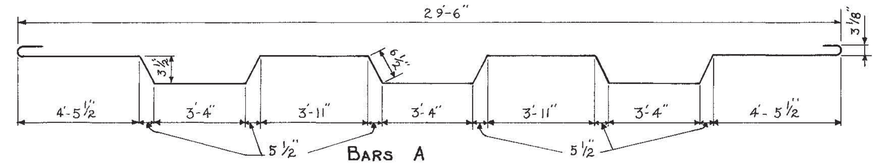

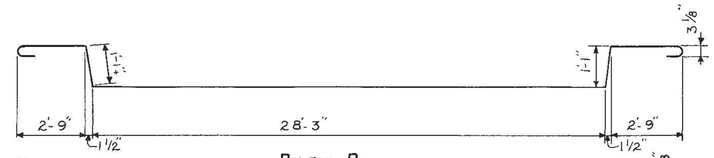

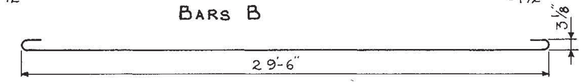

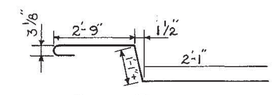

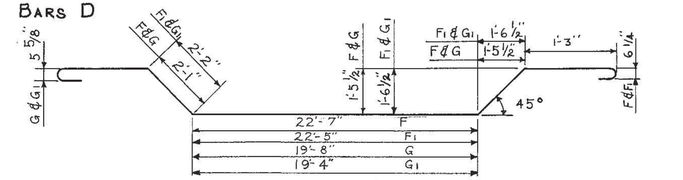

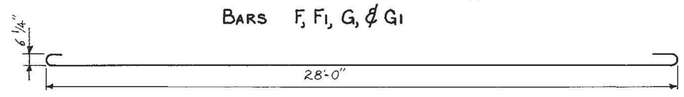

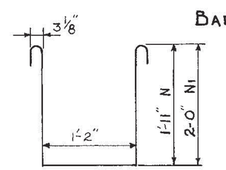

BILL OF STEEL

BAR	NO	SIZE	LENGTH
A	25	5/8"φ	31'-0"
B	26	5/8"φ	36'-11"
C	26	5/8"φ	30'-6"
D	50	5/8"φ	6'-5"
E	33	5/8"φ	28'-0"
F	4	1 1/4"□	31'-3"
F1	4	1 1/4"□	31'-3"
G	4	1 1/8"□	28'-4"
G1	4	1 1/8"□	28'-2"
H	16	1 1/4"□	30'-0"
N	54	5/8"φ	6'-0"
N1	54	5/8"φ	6'-2"
P	5	5/8"φ	25'-6"
ADD	FOR ABUTMENT END		
P1	4	5/8"φ	6'-4"

GENERAL NOTES

SPECIFICATIONS: STANDARD ROAD & BRIDGE SPECIFICATIONS OF THE TENNESSEE DEPARTMENT OF HIGHWAYS & PUBLIC WORKS
LOADING. H20-S16-44
CONCRETE: TO BE CLASS "A"
REINFORCING STEEL: SEE SPECIFICATIONS
FORMS & FINISH: SEE SPECIFICATIONS

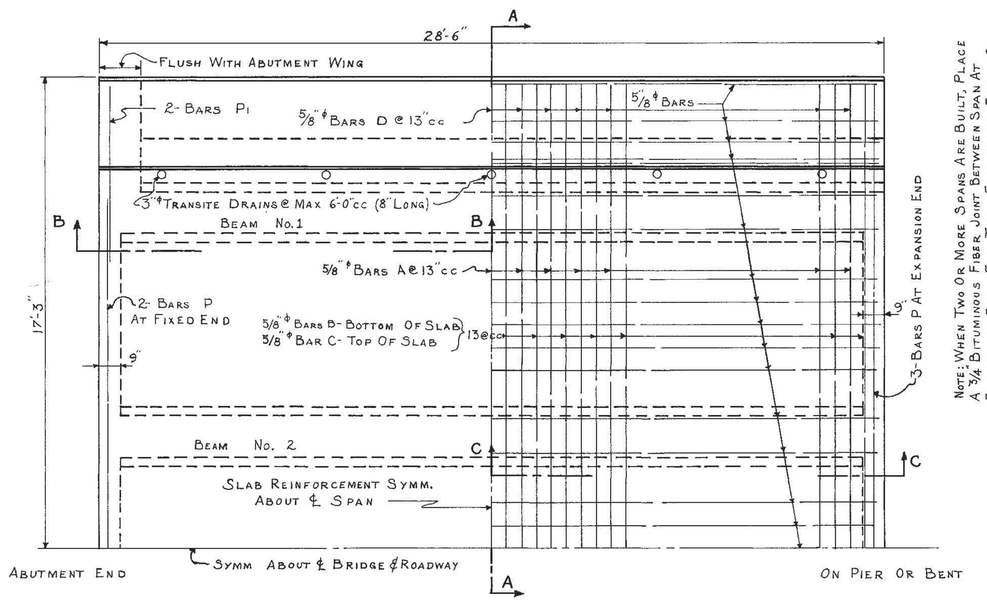

HALF PLAN

NOTE: WHEN TWO OR MORE SPANS ARE BUILT, PLACE A 3/4" BITUMINOUS FIBER JOINT BETWEEN SPAN AT EXPANSION END. FOR TWO EXPANSION ENDS OVER ONE PIER OR BENT USE A 1" BITUMINOUS JOINT. TOP OF JOINT TO A DEPTH OF 1" SHALL BE FILLED WITH A RUBBER ASPHALT JOINT COMPOUND-FEDERAL SPECIFICATIONS SS-S-164.

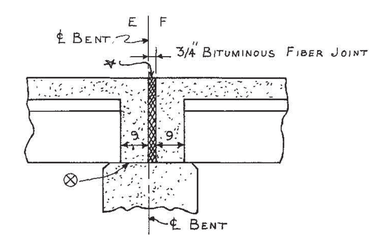

SECTION ALONG ℄ OF ROADWAY SHOWING JOINT LOCATION ONE EXPANSION & ONE FIXED END

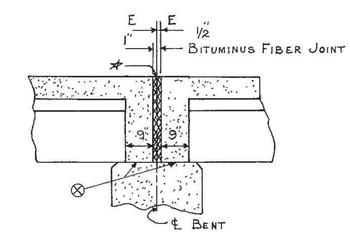

SECTION ALONG ℄ OF ROADWAY SHOWING JOINT LOCATION TWO EXPANSION ENDS

* TOP OF JOINT FILLED 1" DEEP WITH RUBBER ASPHALT JOINT COMPOUND FEDERAL SPECIFICATIONS SS-S-164.

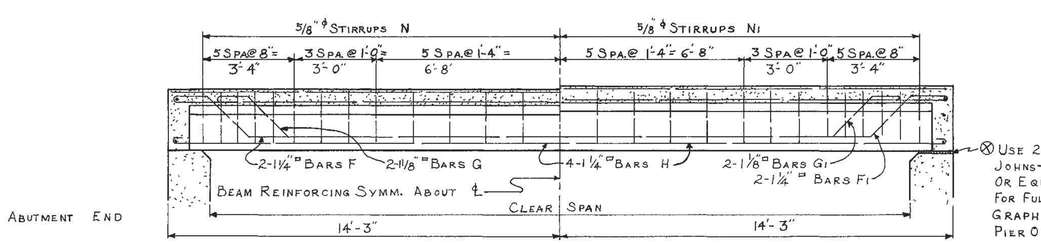

⊗ USE 2-LAYERS 1/16" THICK (EACH LAYER) JOHNS-MANVILLE PACKING No 60 OR EQUAL UNDER BEAMS & BACKWALL FOR FULL WIDTH OF BRIDGE SEAT ON EXPANSION SIDE GRAPHITE SURFACES IN CONTACT PIER OR BENT

SECTION B-B BEAN No. 1

SECTION C-C BEAM No. 2

ESTIMATED QUANTITIES

ITEM	CONCRETE CLASS "A" CU. YDS.	REINFORCING STEEL LBS.
INTERMEDIATE SPAN	33.8	9581
END SPAN	36.8	9604

NOTE: COST OF TRANSITE DRAINS, JOINT MATERIAL, AND JOHNS-MANVILLE PACKING No. 60, OR EQUAL SHALL BE INCLUDED IN UNIT PRICE BID FOR CLASS "A" CONCRETE

STATE OF TENNESSEE
DEPARTMENT OF HIGHWAYS AND PUBLIC WORKS
NASHVILLE

STANDARD CONCRETE BRIDGE

DECK GIRDER TYPE
26'-0" CLEAR SPAN 28'-0" ROADWAY
WITH SAFETY CURBS
1956

CORRECT Fred Grime BRIDGE ENGINEER
APPROVED STATE HIGHWAY ENGINEER

F-10-6

3 COPIES

DESIGNED BY
DRAWN BY R.B. OMOHUNDRA DATE 8-21-56
RE-TRACED BY J. BYRD DATE 9-23-59
CHECKED BY DATE

MICROFILMED

FED. ROAD DIST. NO.	STATE	FED. AID PROJ. NO.	FISCAL YEAR	SHEET NO.	TOTAL SHEETS
3	TENN.		19	77	197

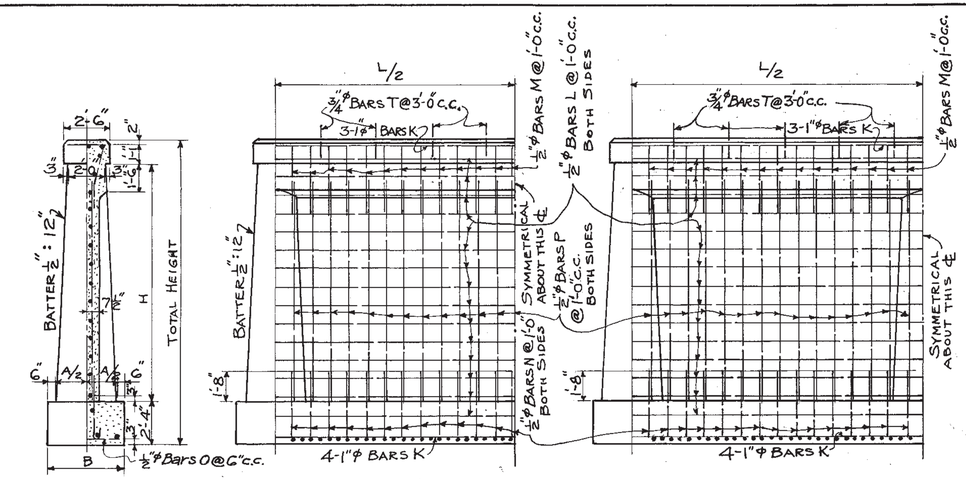

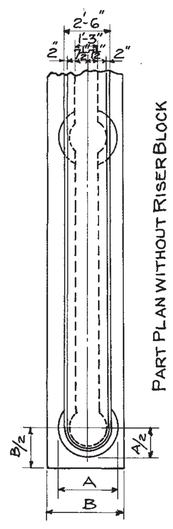

GENERAL NOTES:

SPECIFICATIONS: STANDARD ROAD & BRIDGE SPECIFICATIONS OF THE TENNESSEE DEPARTMENT OF HIGHWAYS & PUBLIC WORKS.
CONCRETE: SHALL BE CLASS "A".
REINFORCING STEEL:
FORMS & FINISH:
ROCK FOUNDATION: } SEE SPECIFICATIONS.

RULE FOR LENGTH OF PIER:
OUTSIDE BEAM OF GIRDER SHALL HAVE FULL BEARING ON PIER & RISER BLOCK. THE RISER BLOCK SHALL NOT BE CURVED AT THE ENDS.

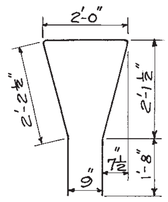

DETAIL OF BARS M

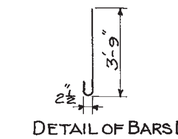

DETAIL OF BARS N

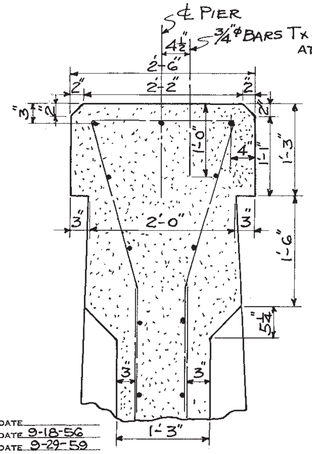

TABLE OF BARS F
FOR ONE FIXED END

LENGTH L	No.
26'-0"	9
27'-0" To 30'-0"	10
30'-0" To 33'-0"	11
33'-0" To 36'-0"	12
36'-0" To 39'-0"	13
39'-0" To 42'-0"	14
42'-0" To 45'-0"	15
45'-0" To 48'-0"	16
48'-0" To 51'-0"	17
51'-0" To 54'-0"	18

TABLE OF DIMENSIONS AND ESTIMATED QUANTITIES

TOTAL HEIGHT	DIMENSIONS H	DIMENSIONS A	DIMENSIONS B	TYPE A - L=26'-0" * STEEL REINFORCEMENT BARS K=1"φ BARS L-M-N-O-P=½"φ BARS K-M-N	BARS L No.	BARS L LGTH.	BARS O No.	BARS O LGTH.	BARS P No.	BARS P LGTH.	TOTAL QUANTITIES REINF. POUNDS	TOTAL QUANTITIES CONC. CU.YDS.
9'-7"	6'	2'-6"	3'-6"		16	26'-0"	49	3'-0"	50	5'-0"	1336	21.8
10'-7"	7'	2'-7"	3'-7"		18	26'-0"	49	3'-0"	50	6'-0"	1405	23.5
11'-7"	8'	2'-8"	3'-8"		20	26'-0"	49	3'-3"	50	7'-0"	1481	25.2
12'-7"	9'	2'-9"	3'-9"		22	26'-0"	49	3'-3"	50	8'-0"	1550	27.0
13'-7"	10'	2'-10"	3'-10"		24	26'-0"	49	3'-3"	50	9'-0"	1618	28.7
14'-7"	11'	2'-11"	3'-11"		26	26'-0"	49	3'-6"	50	10'-0"	1694	30.5
15'-7"	12'	3'-0"	4'-0"		28	26'-0"	49	3'-6"	50	11'-0"	1763	32.4
16'-7"	13'	3'-1"	4'-1"		30	26'-0"	49	3'-6"	50	12'-0"	1831	34.2
17'-7"	14'	3'-2"	4'-2"		32	26'-0"	49	3'-9"	50	13'-0"	1908	36.1
18'-7"	15'	3'-3"	4'-3"		34	26'-0"	49	3'-9"	50	14'-0"	1976	38.0
19'-7"	16'	3'-4"	4'-4"		36	26'-0"	49	3'-9"	50	15'-0"	2044	39.9
20'-7"	17'	3'-5"	4'-5"		38	26'-0"	49	4'-0"	50	16'-0"	2121	41.9
21'-7"	18'	3'-6"	4'-6"		40	26'-0"	49	4'-0"	50	17'-0"	2189	43.9
22'-7"	19'	3'-7"	4'-7"		42	26'-0"	49	4'-0"	50	18'-0"	2258	45.9
23'-7"	20'	3'-8"	4'-8"		44	26'-0"	49	4'-3"	50	19'-0"	2334	47.9
24'-7"	21'	3'-9"	4'-9"		46	26'-0"	49	4'-3"	50	20'-0"	2402	50.0
25'-7"	22'	3'-10"	4'-10"		48	26'-0"	49	4'-3"	50	21'-0"	2471	52.1
26'-7"	23'	3'-11"	4'-11"		50	26'-0"	49	4'-6"	50	22'-0"	2547	54.3
27'-7"	24'	4'-0"	5'-0"		52	26'-0"	49	4'-6"	50	23'-0"	2616	56.5
28'-7"	25'	4'-1"	5'-1"		54	26'-0"	49	4'-6"	50	24'-0"	2684	58.7
29'-7"	26'	4'-2"	5'-2"		56	26'-0"	49	4'-9"	50	25'-0"	2761	61.0
30'-7"	27'	4'-3"	5'-3"		58	26'-0"	49	4'-9"	50	26'-0"	2829	63.3
31'-7"	28'	4'-4"	5'-4"		60	26'-0"	49	4'-9"	50	27'-0"	2897	65.6
32'-7"	29'	4'-5"	5'-5"		62	26'-0"	49	5'-0"	50	28'-0"	2974	68.0
33'-7"	30'	4'-6"	5'-6"		64	26'-0"	49	5'-0"	50	29'-0"	3042	70.4
34'-7"	31'	4'-7"	5'-7"		66	26'-0"	49	5'-0"	50	30'-0"	3111	72.9
35'-7"	32'	4'-8"	5'-8"		68	26'-0"	49	5'-3"	50	31'-0"	3187	75.4
36'-7"	33'	4'-9"	5'-9"		70	26'-0"	49	5'-3"	50	32'-0"	3255	77.9
37'-7"	34'	4'-10"	5'-10"		72	26'-0"	49	5'-3"	50	33'-0"	3324	80.5
38'-7"	35'	4'-11"	5'-11"		74	26'-0"	49	5'-6"	50	34'-0"	3400	83.1
39'-7"	36'	5'-0"	6'-0"		76	26'-0"	49	5'-6"	50	35'-0"	3469	85.8
40'-7"	37'	5'-1"	6'-1"		78	26'-0"	49	5'-6"	50	36'-0"	3537	88.5
41'-7"	38'	5'-2"	6'-2"		80	26'-0"	49	5'-9"	50	37'-0"	3614	91.3
42'-7"	39'	5'-3"	6'-3"		82	26'-0"	49	5'-9"	50	38'-0"	3682	94.1
43'-7"	40'	5'-4"	6'-4"		84	26'-0"	49	5'-9"	50	39'-0"	3750	97.0
44'-7"	41'	5'-5"	6'-5"		86	26'-0"	49	6'-0"	50	40'-0"	3827	99.9
45'-7"	42'	5'-6"	6'-6"		88	26'-0"	49	6'-0"	50	41'-0"	3895	102.9
46'-7"	43'	5'-7"	6'-7"		90	26'-0"	49	6'-0"	50	42'-0"	3963	105.9
47'-7"	44'	5'-8"	6'-8"		92	26'-0"	49	6'-3"	50	43'-0"	4040	109.0
48'-7"	45'	5'-9"	6'-9"		94	26'-0"	49	6'-3"	50	44'-0"	4108	112.1
49'-7"	46'	5'-10"	6'-10"		96	26'-0"	49	6'-3"	50	45'-0"	4177	115.3
50'-7"	47'	5'-11"	6'-11"		98	26'-0"	49	6'-6"	50	46'-0"	4253	118.5

* L=26'-0" BASED ON 28' ROADWAY DECK GIRDER-90° SKEW

TOTAL HEIGHT	TYPE A - L=27'-6" * STEEL REINFORCEMENT BARS K=1"φ BARS L-M-N-O-P=½"φ BARS K-M-N	BARS L No.	BARS L LGTH.	BARS O No.	BARS O LGTH.	BARS P No.	BARS P LGTH.	TOTAL QUANTITIES REINF. POUNDS	TOTAL QUANTITIES CONC. CU.YDS.
9'-7"	7 BARS K 1"φ x 26'-0" 25 BARS M ½"φ x 5'-9" 50 BARS N ½"φ x 4'-3"	16	27'-6"	53	3'-0"	54	5'-0"	1426	22.9
10'-7"		18	27'-6"	53	3'-0"	54	6'-0"	1499	24.7
11'-7"		20	27'-6"	53	3'-3"	54	7'-0"	1581	26.5
12'-7"		22	27'-6"	53	3'-3"	54	8'-0"	1654	28.4
13'-7"		24	27'-6"	53	3'-3"	54	9'-0"	1727	30.1
14'-7"		26	27'-6"	53	3'-6"	54	10'-0"	1809	32.0
15'-7"		28	27'-6"	53	3'-6"	54	11'-0"	1882	34.0
16'-7"		30	27'-6"	53	3'-6"	54	12'-0"	1955	35.9
17'-7"		32	27'-6"	53	3'-9"	54	13'-0"	2037	37.9
18'-7"		34	27'-6"	53	3'-9"	54	14'-0"	2110	39.8
19'-7"		36	27'-6"	53	3'-9"	54	15'-0"	2183	41.8
20'-7"		38	27'-6"	53	4'-0"	54	16'-0"	2265	43.9
21'-7"		40	27'-6"	53	4'-0"	54	17'-0"	2338	46.0
22'-7"		42	27'-6"	53	4'-0"	54	18'-0"	2411	48.1
23'-7"		44	27'-6"	53	4'-3"	54	19'-0"	2493	50.1
24'-7"		46	27'-6"	53	4'-3"	54	20'-0"	2566	52.3
25'-7"		48	27'-6"	53	4'-3"	54	21'-0"	2639	54.5
26'-7"		50	27'-6"	53	4'-6"	54	22'-0"	2721	56.8
27'-7"		52	27'-6"	53	4'-6"	54	23'-0"	2794	59.1
28'-7"		54	27'-6"	53	4'-6"	54	24'-0"	2867	61.3
29'-7"		56	27'-6"	53	4'-9"	54	25'-0"	2949	63.7
30'-7"		58	27'-6"	53	4'-9"	54	26'-0"	3022	66.1
31'-7"		60	27'-6"	53	4'-9"	54	27'-0"	3095	68.5
32'-7"		62	27'-6"	53	5'-0"	54	28'-0"	3177	71.0
33'-7"		64	27'-6"	53	5'-0"	54	29'-0"	3250	73.4
34'-7"		66	27'-6"	53	5'-0"	54	30'-0"	3323	76.0
35'-7"		68	27'-6"	53	5'-3"	54	31'-0"	3405	78.6
36'-7"		70	27'-6"	53	5'-3"	54	32'-0"	3478	81.2
37'-7"		72	27'-6"	53	5'-3"	54	33'-0"	3551	83.9
38'-7"		74	27'-6"	53	5'-6"	54	34'-0"	3633	86.6
39'-7"		76	27'-6"	53	5'-6"	54	35'-0"	3706	89.3
40'-7"		78	27'-6"	53	5'-6"	54	36'-0"	3779	92.1
41'-7"		80	27'-6"	53	5'-9"	54	37'-0"	3861	95.0
42'-7"		82	27'-6"	53	5'-9"	54	38'-0"	3934	97.9
43'-7"		84	27'-6"	53	5'-9"	54	39'-0"	4007	100.8
44'-7"		86	27'-6"	53	6'-0"	54	40'-0"	4089	103.8
45'-7"		88	27'-6"	53	6'-0"	54	41'-0"	4162	106.9
46'-7"		90	27'-6"	53	6'-0"	54	42'-0"	4235	110.0
47'-7"		92	27'-6"	53	6'-3"	54	43'-0"	4317	113.2
48'-7"		94	27'-6"	53	6'-3"	54	44'-0"	4390	116.4
49'-7"		96	27'-6"	53	6'-3"	54	45'-0"	4463	119.6
50'-7"		98	27'-6"	53	6'-6"	54	46'-0"	4545	122.9

* L=27'-6" BASED ON 28' ROADWAY DECK GIRDER-75° SKEW

TOTAL HEIGHT	TYPE B - L=31'-6" * STEEL REINFORCEMENT BARS K=1"φ BARS L-M-N-O-P=½"φ BARS K-M-N	BARS L No.	BARS L LGTH.	BARS O No.	BARS O LGTH.	BARS P No.	BARS P LGTH.	TOTAL QUANTITIES REINF. POUNDS	TOTAL QUANTITIES CONC. CU.YDS.
9'-7"	7 BARS K 1"φ x 31'-6" 30 BARS M ½"φ x 9'-9" 60 BARS N ½"φ x 4'-3"	16	31'-6"	58	3'-0"	60	5'-0"	1611	26.1
10'-7"		18	31'-6"	58	3'-0"	60	6'-0"	1694	28.2
11'-7"		20	31'-6"	58	3'-3"	60	7'-0"	1786	30.3
12'-7"		22	31'-6"	58	3'-3"	60	8'-0"	1868	32.4
13'-7"		24	31'-6"	58	3'-3"	60	9'-0"	1951	34.6
14'-7"		26	31'-6"	58	3'-6"	60	10'-0"	2043	36.8
15'-7"		28	31'-6"	58	3'-6"	60	11'-0"	2125	39.0
16'-7"		30	31'-6"	58	3'-6"	60	12'-0"	2208	41.3
17'-7"		32	31'-6"	58	3'-9"	60	13'-0"	2300	43.6
18'-7"		34	31'-6"	58	3'-9"	60	14'-0"	2382	45.9
19'-7"		36	31'-6"	58	3'-9"	60	15'-0"	2464	48.3
20'-7"		38	31'-6"	58	4'-0"	60	16'-0"	2557	50.7
21'-7"		40	31'-6"	58	4'-0"	60	17'-0"	2639	53.2
22'-7"		42	31'-6"	58	4'-0"	60	18'-0"	2721	55.7
23'-7"		44	31'-6"	58	4'-3"	60	19'-0"	2814	58.3
24'-7"		46	31'-6"	58	4'-3"	60	20'-0"	2896	60.9
25'-7"		48	31'-6"	58	4'-3"	60	21'-0"	2978	63.6
26'-7"		50	31'-6"	58	4'-6"	60	22'-0"	3071	66.3
27'-7"		52	31'-6"	58	4'-6"	60	23'-0"	3153	69.0
28'-7"		54	31'-6"	58	4'-6"	60	24'-0"	3235	71.8
29'-7"		56	31'-6"	58	4'-9"	60	25'-0"	3327	74.7
30'-7"		58	31'-6"	58	4'-9"	60	26'-0"	3410	77.6
31'-7"		60	31'-6"	58	4'-9"	60	27'-0"	3492	80.6
32'-7"		62	31'-6"	58	5'-0"	60	28'-0"	3584	83.6
33'-7"		64	31'-6"	58	5'-0"	60	29'-0"	3667	86.7
34'-7"		66	31'-6"	58	5'-0"	60	30'-0"	3749	89.8
35'-7"		68	31'-6"	58	5'-3"	60	31'-0"	3841	93.0
36'-7"		70	31'-6"	58	5'-3"	60	32'-0"	3924	96.3
37'-7"		72	31'-6"	58	5'-3"	60	33'-0"	4006	99.6
38'-7"		74	31'-6"	58	5'-6"	60	34'-0"	4098	103.0
39'-7"		76	31'-6"	58	5'-6"	60	35'-0"	4181	106.5
40'-7"		78	31'-6"	58	5'-6"	60	36'-0"	4263	110.0
41'-7"		80	31'-6"	58	5'-9"	60	37'-0"	4355	113.6
42'-7"		82	31'-6"	58	5'-9"	60	38'-0"	4438	117.3
43'-7"		84	31'-6"	58	5'-9"	60	39'-0"	4520	121.0
44'-7"		86	31'-6"	58	6'-0"	60	40'-0"	4612	124.8
45'-7"		88	31'-6"	58	6'-0"	60	41'-0"	4695	128.7
46'-7"		90	31'-6"	58	6'-0"	60	42'-0"	4777	132.6
47'-7"		92	31'-6"	58	6'-3"	60	43'-0"	4869	136.6
48'-7"		94	31'-6"	58	6'-3"	60	44'-0"	4952	140.7
49'-7"		96	31'-6"	58	6'-3"	60	45'-0"	5034	144.9
50'-7"		98	31'-6"	58	6'-6"	60	46'-0"	5126	149.2

* L=31'-6" BASED ON 28' ROADWAY DECK GIRDER-60° SKEW

TOTAL HEIGHT	TYPE B - L=39'-0" * STEEL REINFORCEMENT BARS K=1"φ BARS L-M-N-O-P=½"φ BARS K-M-N	BARS L No.	BARS L LGTH.	BARS O No.	BARS O LGTH.	BARS P No.	BARS P LGTH.	TOTAL QUANTITIES REINF. POUNDS	TOTAL QUANTITIES CONC. CU.YDS.	QUANTITIES PER FT. OF LGTH. SAME FOR ALL TYPES REINF. POUNDS	QUANTITIES PER FT. OF LGTH. SAME FOR ALL TYPES CONC. CU.YDS.
9'-7"	7 BARS K 1"φ x 39'-0" 38 BARS M ½"φ x 9'-9" 76 BARS N ½"φ x 4'-3"	16	39'-0"	74	3'-0"	76	5'-0"	2015	31.7	52.4	0.747
10'-7"		18	39'-0"	74	3'-0"	76	6'-0"	2119	34.2	55.0	0.801
11'-7"		20	39'-0"	74	3'-3"	76	7'-0"	2234	36.7	58.1	0.854
12'-7"		22	39'-0"	74	3'-3"	76	8'-0"	2337	39.2	60.7	0.908
13'-7"		24	39'-0"	74	3'-3"	76	9'-0"	2441	41.8	63.4	0.961
14'-7"		26	39'-0"	74	3'-6"	76	10'-0"	2556	44.4	66.4	1.015
15'-7"		28	39'-0"	74	3'-6"	76	11'-0"	2659	47.0	69.1	1.068
16'-7"		30	39'-0"	74	3'-6"	76	12'-0"	2762	49.7	71.8	1.122
17'-7"		32	39'-0"	74	3'-9"	76	13'-0"	2878	52.4	74.8	1.175
18'-7"		34	39'-0"	74	3'-9"	76	14'-0"	2981	55.1	77.5	1.229
19'-7"		36	39'-0"	74	3'-9"	76	15'-0"	3084	57.9	80.2	1.282
20'-7"		38	39'-0"	74	4'-0"	76	16'-0"	3200	60.7	83.2	1.336
21'-7"		40	39'-0"	74	4'-0"	76	17'-0"	3303	63.6	85.9	1.389
22'-7"		42	39'-0"	74	4'-0"	76	18'-0"	3406	66.5	88.6	1.443
23'-7"		44	39'-0"	74	4'-3"	76	19'-0"	3522	69.5	91.6	1.496
24'-7"		46	39'-0"	74	4'-3"	76	20'-0"	3625	72.5	94.3	1.550
25'-7"		48	39'-0"	74	4'-3"	76	21'-0"	3728	75.6	96.9	1.603
26'-7"		50	39'-0"	74	4'-6"	76	22'-0"	3844	78.7	100.0	1.657
27'-7"		52	39'-0"	74	4'-6"	76	23'-0"	3947	81.8	102.6	1.710
28'-7"		54	39'-0"	74	4'-6"	76	24'-0"	4050	85.0	105.3	1.764
29'-7"		56	39'-0"	74	4'-9"	76	25'-0"	4166	88.3	108.3	1.817
30'-7"		58	39'-0"	74	4'-9"	76	26'-0"	4269	91.6	111.0	1.871
31'-7"		60	39'-0"	74	4'-9"	76	27'-0"	4372	95.0	113.7	1.924
32'-7"		62	39'-0"	74	5'-0"	76	28'-0"	4488	98.4	116.7	1.978
33'-7"		64	39'-0"	74	5'-0"	76	29'-0"	4591	101.9	119.4	2.031
34'-7"		66	39'-0"	74	5'-0"	76	30'-0"	4694	105.4	122.1	2.085
35'-7"		68	39'-0"	74	5'-3"	76	31'-0"	4810	109.0	125.1	2.138
36'-7"		70	39'-0"	74	5'-3"	76	32'-0"	4913	112.7	127.8	2.192
37'-7"		72	39'-0"	74	5'-3"	76	33'-0"	5016	116.4	130.5	2.245
38'-7"		74	39'-0"	74	5'-6"	76	34'-0"	5132	120.2	133.5	2.299
39'-7"		76	39'-0"	74	5'-6"	76	35'-0"	5235	124.1	136.2	2.352
40'-7"		78	39'-0"	74	5'-6"	76	36'-0"	5338	128.0	138.8	2.406
41'-7"		80	39'-0"	74	5'-9"	76	37'-0"	5454	132.0	141.9	2.459
42'-7"		82	39'-0"	74	5'-9"	76	38'-0"	5557	136.1	144.5	2.513
43'-7"		84	39'-0"	74	5'-9"	76	39'-0"	5660	140.2	147.2	2.566
44'-7"		86	39'-0"	74	6'-0"	76	40'-0"	5775	144.4	150.2	2.620
45'-7"		88	39'-0"	74	6'-0"	76	41'-0"	5879	148.7	152.9	2.673
46'-7"		90	39'-0"	74	6'-0"	76	42'-0"	5982	153.0	155.6	2.727
47'-7"		92	39'-0"	74	6'-3"	76	43'-0"	6097	157.5	158.6	2.780
48'-7"		94	39'-0"	74	6'-3"	76	44'-0"	6201	162.0	161.3	2.834
49'-7"		96	39'-0"	74	6'-3"	76	45'-0"	6304	166.6	164.0	2.887
50'-7"		98	39'-0"	74	6'-6"	76	46'-0"	6419	171.3	167.0	2.941

* BASED ON 28' ROADWAY DECK GIRDER-45° SKEW

NOTE: FOR NUMBER OF BARS T SEE TABLE AT LEFT.

STATE OF TENNESSEE
DEPARTMENT OF HIGHWAYS AND PUBLIC WORKS
NASHVILLE

STANDARD CONCRETE PIERS

DUMBELL TYPE
HEIGHTS 10'-50'
1956

DESIGNED BY _____ DATE _____
DRAWN BY M. ADDUX DATE 9-18-56
RETRACED BY CMD DATE 9-29-59
CHECKED BY _____ DATE _____

CORRECT Fred Green BRIDGE ENGINEER
APPROVED C. E. D. Raug STATE HIGHWAY ENGINEER

F-10-14

8 copies

MICROFILMED

FED ROAD DIST NO	STATE	FED AID PROJ NO	FISCAL YEAR	SHEET NO	TOTAL SHEETS
8	TENN.		19	14	118

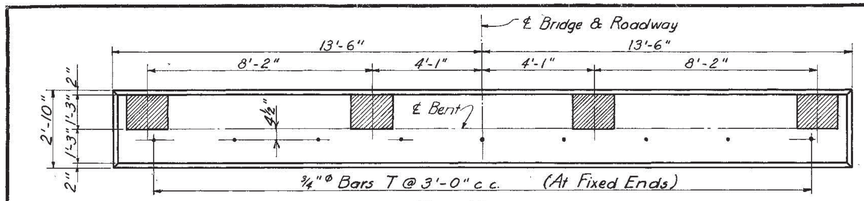

TOP VIEW

Showing one Fixed and one Expansion End

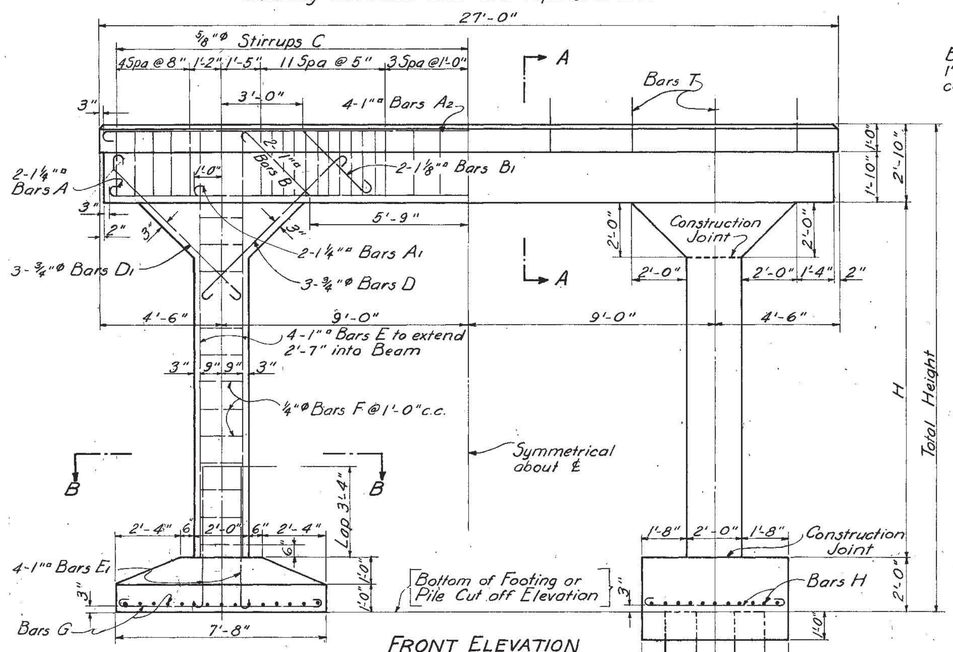

FRONT ELEVATION

TYPE "A" FOOTING

Max. Foundation Pressure 4100 #/sq. ft.

TYPE "B" FOOTING

Max. Foundation Pressure 8400 #/sq. ft.

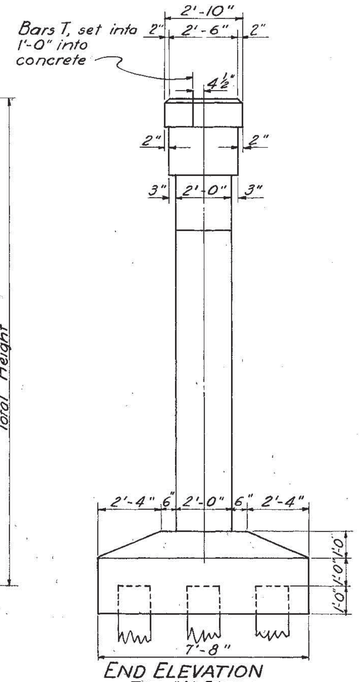

END ELEVATION

TYPE "A" FOOTING

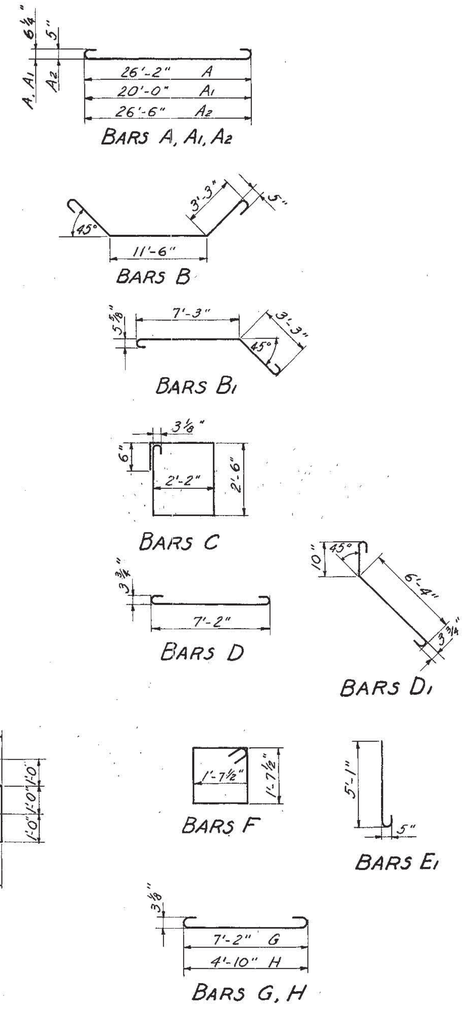

BILL OF STEEL

CONSTANT FOR ALL HEIGHTS

WITH TYPE "A" FOOTING				WITH TYPE "B" FOOTING			
BAR	NO.	SIZE	LENGTH	BAR	NO.	SIZE	LENGTH
A	2	1¼"□	28'-2"	A	2	1¼"□	28'-2"
A1	2	1⅛"□	22'-0"	A1	2	1⅛"□	22'-0"
A2	4	1"□	28'-2"	A2	4	1"□	28'-2"
B	2	1"□	19'-8"	B	2	1"□	19'-8"
B1	4	1⅛"□	12'-4"	B1	4	1⅛"□	12'-4"
C	39	⅝"Φ	10'-4"	C	39	⅝"Φ	10'-4"
D	6	¾"Φ	8'-6"	D	6	¾"Φ	8'-6"
D1	6	¾"Φ	8'-6"	D1	6	¾"Φ	8'-6"
E1	8	1"□	5'-11"	E1	8	1"□	5'-11"
G	60	⅝"Φ	8'-2"	H	44	⅝"Φ	5'-10"

NOTE: Weight of Bars listed above is included in Table of Estimated Quantities.

ADDITIONAL BILL OF STEEL & ESTIMATED QUANTITIES

TOTAL HEIGHT	H	BILL OF STEEL		ESTIMATED QUANTITIES			
				TYPE "A" FOOTING		TYPE "B" FOOTING	
		BARS E 8-1"□	BARS F ¼"Φ x 7'-0"	CONCRETE CLASS "A" CU. YDS.	REINF STEEL LBS. *	CONCRETE CLASS "A" CU. YDS	REINF STEEL LBS. *
		LENGTH	NO.				
13'-0"	10'-2"	12'-9"	20	17.6	2915	15.2	2668
16'-0"	11'-2"	13'-9"	22	17.9	2945	15.5	2698
17'-0"	12'-2"	14'-9"	24	18.1	2975	15.8	2728
18'-0"	13'-2"	15'-9"	26	18.4	3005	16.1	2758
19'-0"	14'-2"	16'-9"	28	18.7	3035	16.3	2788
20'-0"	15'-2"	17'-9"	30	19.0	3065	16.6	2817
21'-0"	16'-2"	18'-9"	32	19.3	3095	16.9	2847
22'-0"	17'-2"	19'-9"	34	19.6	3125	17.2	2877
23'-0"	18'-2"	20'-9"	36	19.9	3155	17.5	2907
24'-0"	19'-2"	21'-9"	38	20.2	3184	17.8	2937
25'-0"	20'-2"	22'-9"	40	20.5	3214	18.1	2967
26'-0"	21'-2"	23'-9"	42	20.8	3244	18.4	2997
27'-0"	22'-2"	24'-9"	44	21.1	3274	18.7	3027
28'-0"	23'-2"	25'-9"	46	21.4	3304	19.0	3057
29'-0"	24'-2"	26'-9"	48	21.7	3334	19.3	3087
30'-0"	25'-2"	27'-9"	50	22.0	3364	19.6	3116
31'-0"	26'-2"	28'-9"	52	22.3	3394	19.9	3146
32'-0"	27'-2"	29'-9"	54	22.6	3424	20.2	3176
33'-0"	28'-2"	30'-9"	56	22.9	3454	20.5	3206
34'-0"	29'-2"	31'-9"	58	23.2	3483	20.8	3236
35'-0"	30'-2"	32'-9"	60	23.5	3513	21.1	3266
36'-0"	31'-2"	33'-9"	62	23.8	3543	21.4	3296
37'-0"	32'-2	34'-9"	64	24.1	3573	21.7	3326
38'-0"	33'-2"	35'-9"	66	24.4	3603	22.0	3356
39'-0"	34'-2"	36'-9"	68	24.7	3633	22.3	3386
40'-0"	35'-2"	37'-9"	70	25.0	3663	22.6	3416
41'-0"	36'-2"	38'-9"	72	25.3	3693	22.9	3446
42'-0"	37'-2"	39'-9"	74	25.5	3723	23.2	3475
43'-0"	38'-2"	40'-9	76	25.8	3753	23.5	3505
44'-0"	39'-2"	41'-9"	78	26.1	3782	23.8	3535

* For each Fixed End add 9-¾"Φ x 2'-0" Bars T = 27 Lbs. Reinforcing Steel.

NOTE: When Timber Piles are used, add 3.8 cu yds. of Cl. "A" Concrete to quantities shown for Type "A" Footing. When Concrete Piles are used, add 1.7 cu. yds. of Cl "A" Concrete to quantities shown for Type "B" Footing.

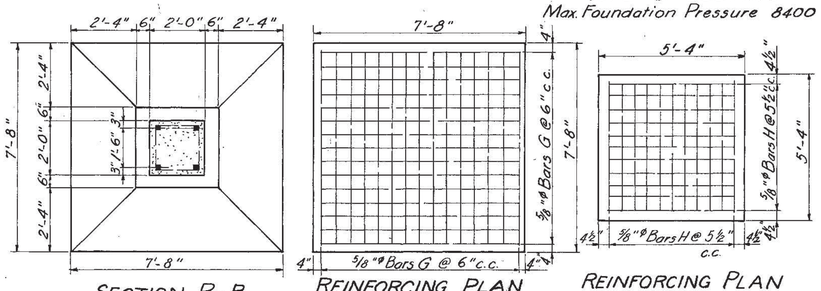

SECTION B-B

REINFORCING PLAN

TYPE "A" FOOTING

REINFORCING PLAN

TYPE "B" FOOTING

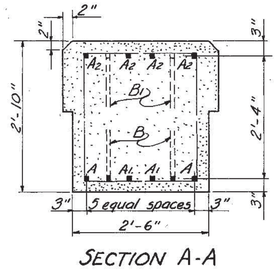

SECTION A-A

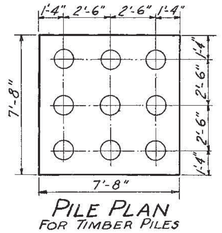

PILE PLAN

FOR TIMBER PILES

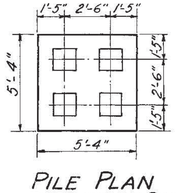

PILE PLAN

FOR CONCRETE PILES

GENERAL NOTES:

SPECIFICATIONS: Standard Road and Bridge specifications of the Tennessee Department of Highways & Public Works.

H20 S16-44 LOADING

CONCRETE: To be Class "A"

REINFORCING STEEL: See Specifications.

FORMS & FINISH: See Specifications.

NOTE: If Expansion End is located on Bent, provisions shall be made when pouring cap, for setting bolts of Bearing Plates, location of which is shown above.

STATE OF TENNESSEE

DEPARTMENT OF HIGHWAYS AND PUBLIC WORKS

NASHVILLE

STANDARD

CONCRETE BENTS

TOTAL HEIGHT 15'-44' ROADWAY 28'-0" WITH SAFETY CURBS FOR 26' CLEAR SPAN

1945

CORRECT L. G. Kirkham BRIDGE ENGINEER

APPROVED M. Brooks STATE HIGHWAY ENGINEER

C-4-143

DESIGNED BY	M. Sabuerman	DATE	11-19-45
DRAWN BY	Dorothy O. Wilson	DATE	1-23-46
TRACED BY		DATE	
CHECKED BY	W.S.	DATE	12-6-45

Use F-10-30