SEE SHEET NO. IA FOR INDEX

TENN.	YEAR	SHEET NO.
	2014	1
FED. AID PROJ. NO.	STP-126(19)	
STATE PROJ. NO.	82956-3288-04 82085-3236-14	

STATE OF TENNESSEE
DEPARTMENT OF TRANSPORTATION
BUREAU OF ENGINEERING

SULLIVAN COUNTY

SIA SERVING EASTMAN CORPORATE BUSINESS CENTER
S.R. 126 (WILCOX DR.) PEDESTRIAN BRIDGE SERVING
EASTMAN CORPORATE BUSINESS CENTER &
S.R. 126 INTERSECTION IMPROVEMENTS

CONSTRUCTION

STATE HIGHWAY NO. 126 F.A.H.S. NO. N/A

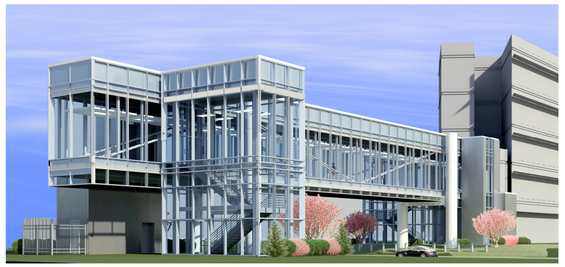

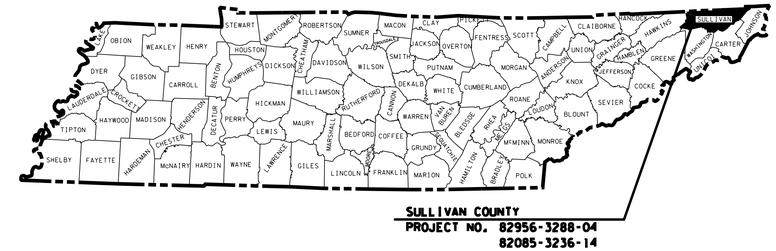

(PIN 119832.01)
82085-3236-14
END PROJ. STP-126(19)
STA. 138+21.00 (CONST.)

(PIN 119832.01)
82085-3236-14
BEGIN PROJ. STP-126(19)
STA. 119+90.00 (CONST.)

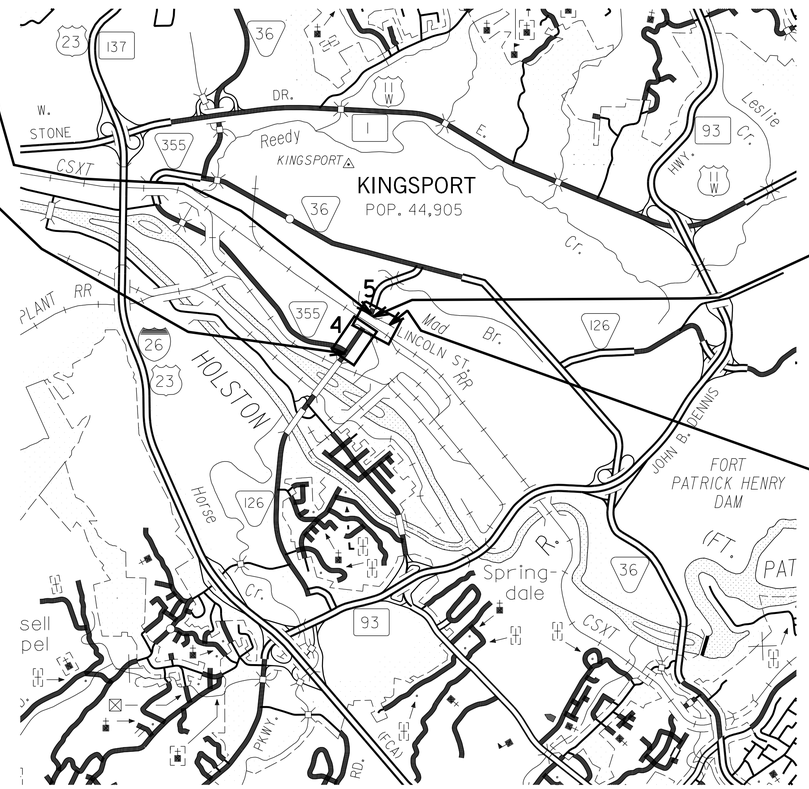

(PIN 119832.00)
BEGIN SIA PROJ. 82956-3288-04
STA. 21+00.00 (CONST.)

(PIN 119832.00)
END SIA PROJ. 82956-3288-04
STA. 28+02.00 (CONST.)

N

SCALE: 1"= 3000'

UNOFFICIAL SET
NOT FOR BIDDING

SEALED BY
RANDY W. BECKNER
REGISTERED ENGINEER
6/20/14
COMMERCE
No. 101559
STATE OF TENNESSEE

NO EXCLUSIONS
NO EQUATIONS

APPROVED: Paul D. Degges
PAUL D. DEGGES, CHIEF ENGINEER

DATE:

APPROVED:
JOHN SCHROER, COMMISSIONER

ORIGINAL SURVEY: DECEMBER 2013

TRAFFIC DATA (S.R. 126)	
ADT (2014)	20,450
ADT (2034)	22,530
DHV (2034)	2,285
D	52 - 48
T (ADT)	12 %
T (DHV)	8 %
V	35 MPH

TRAFFIC DATA (LINCOLN ST.)	
ADT (2014)	7,460
ADT (2034)	8,210
DHV (2034)	740
D	50 - 50
T (ADT)	6 %
T (DHV)	4 %
V	40 MPH

U.S. DEPARTMENT OF TRANSPORTATION
FEDERAL HIGHWAY ADMINISTRATION

APPROVED:

DIVISION ADMINISTRATOR DATE

SPECIAL NOTES

PROPOSALS MAY BE REJECTED BY THE COMMISSIONER IF ANY OF THE UNIT PRICES CONTAINED THEREIN ARE OBVIOUSLY UNBALANCED, EITHER EXCESSIVE OR BELOW THE REASONABLE COST ANALYSIS VALUE.

THIS PROJECT TO BE CONSTRUCTED UNDER THE STANDARD SPECIFICATIONS OF THE TENNESSEE DEPARTMENT OF TRANSPORTATION DATED MARCH 1, 2006 AND ADDITIONAL SPECIFICATIONS AND SPECIAL PROVISIONS CONTAINED IN THE PLANS AND IN THE PROPOSAL CONTRACT.

TDOT C.E. MANAGER 1 OR
TDOT ROAD SP. SV. 2 MAYSOON HADDAD

DESIGNED BY MATTERN & CRAIG
DESIGNER JASON CARDER, P.E. CHECKED BY RANDY DODSON
RANDY BECKNER, P.E.

P.E. NO. 82956-1288-04 & 82085-1236-04

PIN NO. 119832.00 & 119832.01

	PIN 119832.00 82956-3288-04	PIN 119832.01 STP-126(19)
ROADWAY LENGTH	0.133 MI.	0.347 MI.
BRIDGE LENGTH	* 0.015 MI.	* 0.034 MI.
BOX BRIDGE LENGTH	0.000 MI.	0.000 MI.
PROJECT LENGTH	0.133 MI.	0.347 MI.

* NOT INCLUDED IN PROJECT LENGTH

6/19/2014 4:02:14 PM H:\3136 - Sullivan Co Eastman SIA\001_Title.sht

TYPE	YEAR	PROJECT NO.	SHEET NO.
CONST.	2014	82956-3288-04 STP-126(19)	1A

INDEX

SHEET NAME	SHEET NO.
TITLE SHEET	1
INDEX AND STANDARD ROADWAY DRAWINGS	1A – 1B
ESTIMATED BRIDGE QUANTITIES AND BRIDGE INDEX	2
ESTIMATED ROADWAY QUANTITIES	2A
ESTIMATED SIGNAL QUANTITIES & DETAILS	2B
ESTIMATED UTILITIES QUANTITIES	2C
TYPICAL SECTIONS	2D
GENERAL NOTES AND SPECIAL NOTES	2E – 2G
TABULATED QUANTITIES & DETAILS	2H – 2I
PROPERTY MAP AND RIGHT-OF-WAY ACQUISITION TABLE	3
PRESENT LAYOUTS	4 – 5
R.O.W. DETAILS	4A – 5A
PROPOSED LAYOUTS	4B – 5B
PROFILES	4C – 5C
RETAINING WALL DETAILS	5D
SIDE ROAD PROFILES	6
DRAINAGE MAP	7
EROSION PREVENTION AND SEDIMENT CONTROL (EPSC)	
NOTES & LEGEND	8 – 8A
EPSC PLAN STAGE I	9 – 10
EPSC PLAN STAGE II	11 – 12
PROPOSED SIGNAL LAYOUTS	13 – 16
TRAFFIC CONTROL PLANS	17 – 17D
S.R. 126 CROSS SECTIONS	18 – 25
WILCOX ENTRANCE CROSS SECTIONS	26
LINCOLN ST. CROSS SECTIONS	27 – 30
SULLIVAN ST. EXT. CROSS SECTIONS	31 – 32
SULLIVAN ST. CROSS SECTIONS	33
UTILITIES INDEX	U1-1
STORM WATER POLLUTION PREVENTION PLAN (SWPPP) INDEX	S-1

NO PROJECT COMMITMENTS SHEET INCLUDED IN THIS SET OF PLANS.

STANDARD ROADWAY DRAWINGS

DWG. NO	REV.	DESCRIPTION
ROADWAY DESIGN STANDARDS		
RD-A-1	12-18-99	STANDARD ABBREVIATIONS
RD-L-1	10-26-94	STANDARD LEGEND
RD-L-2	09-05-01	STANDARD LEGEND FOR UTILITY INSTALLATIONS
RD-L-3	04-15-04	STANDARD LEGEND FOR SIGNALIZATION AND LIGHTING
RD-L-4	04-15-04	STANDARD LEGEND FOR SIGNALIZATION AND LIGHTING
RD-L-5	05-01-08	STANDARD LEGEND FOR EROSION PREVENTION AND SEDIMENT CONTROL
RD-L-6	03-30-10	STANDARD LEGEND FOR EROSION PREVENTION AND SEDIMENT CONTROL
RD-L-7	05-24-12	STANDARD LEGEND FOR EROSION PREVENTION AND SEDIMENT CONTROL
RD-UD-3	09-05-96	UNDERDRAIN DETAILS
RD-UD-4	05-27-01	UNDERDRAIN LATERAL DETAILS
RD01-S-11	04-04-03	DESIGN AND CONSTRUCTION DETAILS FOR ROADSIDE SLOPE DEVELOPMENT
RD01-S-11A	10-15-02	ROADSIDE DITCH DETAILS FOR DESIGN AND CONSTRUCTION
RD01-SD-1		INTERSECTION SIGHT DISTANCE DESIGN AND GENERAL NOTES
RD01-SD-2		INTERSECTION SIGHT DISTANCE LANDSCAPE AND OBSTRUCTION
RD01-SD-4		INTERSECTION SIGHT DISTANCE 5-LANE AND 4-LANE UNDIVIDED ROADWAYS
RD01-TS-6A	07-31-13	TYPICAL CURB AND GUTTER SECTIONS WITHOUT SHOULDER
DRAINAGE - CULVERTS AND ENDWALL		
D-PB-1	01-02-13	STANDARD DETAILS CLASS "B" BEDDING AND CULVERT EXCAVATION
D-PE-4	01-15-13	STRAIGHT CONCRETE ENDWALL
DRAINAGE-CATCH BASINS AND MANHOLES		
D-CB-12B	03-11-14	STANDARD RECTANGULAR BRICK NO. 12 CATCH BASIN
D-CB-12P	03-11-14	STANDARD PRECAST RECTANGULAR CONCRETE NO. 12 CATCH BASIN
D-CB-12RB	03-11-14	STANDARD PRECAST 60" AND 72" CIRCULAR NO. 12 CATCH BASIN (FOR USE WITH 6" NONMOUNTABLE CURB)
D-CB-12S	03-11-14	STANDARD RECTANGULAR CONCRETE NO. 12 CATCH BASIN
D-CB-14RB	03-11-14	STANDARD PRECAST CIRCULAR NO. 14RB CATCH BASIN
D-CB-99	06-07-13	MISCELLANEOUS DETAILS FOR RECTANGULAR STRUCTURES
D-CB-99R	03-11-14	MISCELLANEOUS DETAILS FOR ROUND STRUCTURES
D-CB-99RA	03-19-14	BILL OF STEEL FOR ROUND CATCH BASIN LIDS
D-CBB-12A	05-27-01	TYPE "B" CAST IRON FRAME, GRATE & NONMOUNTABLE INLET DETAILS FOR NOS. 10, 12, 14, 16, & 17 TYPE CATCH BASINS
D-MH-2	08-01-12	STANDARD MASONRY & PRECAST NO. 3 MANHOLE
D-MH-3	04-21-14	STANDARD PRECAST CIRCULAR LID DETAILS FOR NO. 3 MANHOLE
D-MH-4	04-01-14	STANDARD NO. 3 MANHOLE CASTINGS AND STEPS

DWG. NO	REV.	DESCRIPTION
D-RF-1		STANDARD PRECAST RISER
ROADWAY AND PAVEMENT APPURTENANCES		
RP-H-3	06-04-13	HANDICAP RAMP AND TRUNCATED DOME SURFACE DETAIL
RP-H-4	06-04-13	PERPENDICULAR CURB RAMP
RP-H-5	06-04-13	PARALLEL CURB RAMP
RP-H-7	06-04-13	PERPENDICULAR CURB RAMP TYPE 1
RP-H-9	06-04-13	PARALLEL CURB RAMP TYPE 3 AND 4
RP-I-5	12-18-96	EXAMPLES OF STREET AND ALLEY INTERSECTIONS
RP-NMC-10	07-29-03	STANDARD VERTICAL (NONMOUNTABLE) CONCRETE CURBS AND CONCRETE CURBS AND GUTTERS
RP-R-1	05-27-01	STANDARD RAMPS TO SIDE ROADS
RP-S-7	06-04-13	DETAILS FOR STANDARD CONCRETE SIDEWALKS
RP-S-8	01-19-93	DETAILS FOR STANDARD CONCRETE STEPS AND PIPE HANDRAILS
SAFETY APPURTENANCES AND FENCE		
S-F-1	05-24-12	HIGH VISIBILITY FENCE
S-CZ-1		CLEAR ZONE CRITERIA
S-PL-3		SAFETY PLAN: MINIMUM INSTALLATION AT BRIDGE ENDS
S-PL-6		SAFETY PLAN SAFETY HARDWARE PLACEMENT
S-GR31-1		W-BEAM GUARDRAIL
S-GRC-1		GUARDRAIL CONNECTION TO BRIDGE ENDS OR BARRIER WALL
S-GRT-3		TYPE 21 GUARDRAIL TERMINAL
S-GRT-3D		TYPE 21 GUARDRAIL TERMINAL (DETAILS)
S-GRT-3P		EARTH PAD FOR TYPE 21 TERMINAL
S-GRA-3		GUARDRAIL ANCHOR FOR TYPE 12, 13 AND IN-LINE TERMINALS

UNOFFICIAL SET

NOT FOR BIDDING

SEALED BY

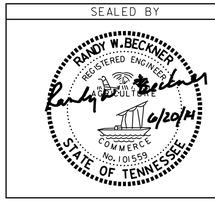

STATE OF TENNESSEE
DEPARTMENT OF TRANSPORTATION

INDEX AND STANDARD DRAWINGS

6/19/2014 4:02:19 PM
H:\3131G - Sullivan Co Eastman SIA\002_SecondSheets.sht

TYPE	YEAR	PROJECT NO.	SHEET NO.
CONST.	2014	82956-3288-04 STP-126(19)	1B

STANDARD ROADWAY DRAWINGS

DWG. NO	REV.	DESCRIPTION
TRAFFIC CONTROL APPURTENANCES		
T-FAB-1	05-27-97	FLASHING YELLOW ARROW BOARD
T-FO-2		FIBER OPTIC UNDERGROUND ENTRANCE DETAILS
T-FO-4		FIBER OPTIC PULL BOX, CABINET & POLE DETAILS
T-L-1SA	09-11-13	STANDARD LIGHTING DETAILS FOR SINGLE ARM SUPPORTS
T-L-1TM		STANDARD LIGHTING DETAILS TENON MOUNTED OFFSET LIGHTING SUPPORTS
T-M-1	11-01-11	DETAILS OF PAVEMENT MARKINGS FOR CONVENTIONAL ROADS AND MARKING ABBREVIATIONS
T-M-3	09-19-91	MARKING STANDARDS FOR TRAFFIC ISLANDS, MEDIANS & PAVED SHOULDERS ON CONVENTIONAL ROADS
T-M-4	11-01-11	STANDARD INTERSECTION PAVEMENT MARKINGS
T-PBR-1	06-30-09	INTERCONNECTED PORTABLE BARRIER RAIL
T-PBR-2	10-10-06	DETAIL FOR VERTICAL PANELS AND FLEXIBLE DELINEATORS
T-SG-2	07-29-04	LOOP LEAD-INS, CONDUIT AND PULL BOXES
T-SG-3A		ALTERNATE DETECTION DETAILS
T-SG-5	12-04-13	CONTROLLER CABINET DETAILS
T-SG-7	11-01-11	SIGNAL HEAD ASSEMBLIES AND PEDESTRIAN PUSH BUTTON SIGNS
T-SG-7A	11-01-11	TYPICAL SIGNAL HEAD PLACEMENT
T-SG-9	12-04-13	DETAILS OF CANTILEVER SIGNAL SUPPORT
T-SG-9A	12-04-13	MISCELLANEOUS SIGNAL DETAILS
T-SG-10	12-04-13	MAST ARM POLE AND STRAIN POLES FOUNDATION DETAILS
T-SG-11	07-29-04	MAINTENANCE OF EXISTING SIGNALS DURING HIGHWAY CONSTRUCTION
T-SG-12	11-01-11	TYPICAL WIRING FOR SIGNAL HEADS AND DETECTION LOOPS
T-WZ-10	04-02-12	ADVANCE ROAD WORK SIGNING ON HIGHWAYS AND FREEWAYS
T-WZ-40	04-02-12	RIGHT LANE CLOSURES AT NEAR SIDE OF INTERSECTIONS
T-WZ-41	04-02-12	LEFT LANE CLOSURES AT NEAR SIDE OF INTERSECTIONS
EROSION PREVENTION AND SEDIMENT CONTROL		
EC-STR-2	08-01-12	SEDIMENT FILTER BAG
EC-STR-3B	08-01-12	SILT FENCE
EC-STR-3C	08-01-12	SILT FENCE WITH WIRE BACKING
EC-STR-3E	04-01-08	SILT FENCE FABRIC JOINING DETAILS
EC-STR-11	08-01-12	CULVERT PROCTECTION TYPE 1
EC-STR-11A	08-01-12	CULVERT PROCTECTION TYPE 2
EC-STR-25	08-01-12	TEMPORARY CULVERT CROSSING, CONSTRUCTION EXIT, CONSTRUCTION FORD
EC-STR-37	08-01-12	SEDIMENT TUBE
EC-STR-39A	08-01-12	CURB INLET PROTECTION TYPE 3 & 4
EC-STR-46		CATCH BASIN FILTER ASSEMBLY (TYPE 6)
EC-STR-46A		CATCH BASIN FILTER ASSEMBLY (TYPE 6) SLIPCOVER DETAILS
EC-STR-47		CATCH BASIN FILTER ASSEMBLY (TYPE 7)
EC-STR-47A		CATCH BASIN FILTER ASSEMBLY (TYPE 7) SLIPCOVER DETAILS

UNOFFICIAL SET

NOT FOR BIDDING

SEALED BY

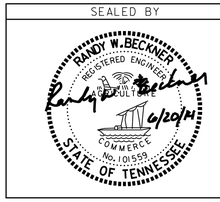

STATE OF TENNESSEE
DEPARTMENT OF TRANSPORTATION

INDEX AND STANDARD DRAWINGS

6/19/2014 4:02:58 PM
H:\3131G - Sullivan Co Eastman SIA\002_SecondSheets.sht

TYPE	YEAR	PROJECT NO.	SHEET NO.
CONST.	2014	82956-3288-04 STP-126(19)	2

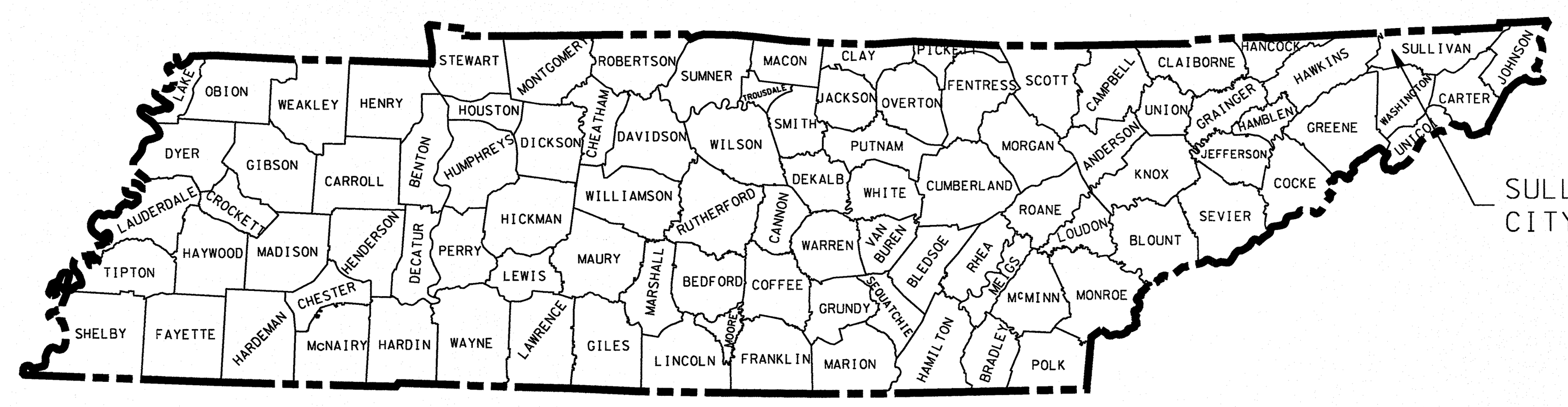

SULLIVAN COUNTY
CITY OF KINGSPORT

ESTIMATED QUANTITIES

ITEM NO.	DESCRIPTION	UNIT	GRAND TOTAL	PROJECT NO. STP-126(19) BR. I.D. NO. 82SR1260017 PEDESTRIAN BRIDGE OVER WILCOX DRIVE STEEL TRUSS FRAME WITH COMPOSITE CONCRETE DECK SLAB 3 SPAN BRIDGE TOTAL LENGTH = 188'-0" 90°00'00" SKEW LAYOUT DWG. NO. U-64-136 TOTAL	PROJECT NO. 82956-3288-04 BR. I.D. NO. 82038860005 SULLIVAN STREET EXT. OVER MADD BRANCH PRESTRESSED CONCRETE I-BEAM (TYPE III) WITH COMPOSITE CONCRETE DECK SLAB 1 SPAN BRIDGE TOTAL LENGTH = 79'-5¾" 54°53'05" SKEW LT. LAYOUT DWG. NO. U-64-183 TOTAL
204-02.01	DRY EXCAVATION (BRIDGES)	C.Y.	150		150
204-04.01	ROCK EXCAVATION (BRIDGES)	C.Y.	15		15
204-14	CORE DRILLING FOR PILES (ROCK)	L.F.	146		146
204-15	CORE DRILLING FOR PILES (SOIL)	L.F.	201		201
303-01.02	GRANULAR BACKFILL (BRIDGES)	TON	120		120
602-03.02	PEDESTRIAN BRIDGE	L.S.	1	1	
604-02.03	EPOXY COATED REINFORCING STEEL	LB.	34501		34501
604-03.01	CLASS A CONCRETE (BRIDGES)	C.Y.	82		82
604-03.02	STEEL BAR REINFORCEMENT (BRIDGES)	LB.	16474		16474
604-03.09	CLASS D CONCRETE (BRIDGE DECK)	C.Y.	173		173
604-03.31	CLASS D CONCRETE (ABUTMENTS)	C.Y.	64		64
604-04.01	APPLIED TEXTURE FINISH (NEW STRUCTURES)	S.Y.	257		257
604-04.03	BRIDGE END DRAIN (2'-0" x 8'-7")	EACH	2		2
604-07.30	RETAINING WALL (LINCOLN STREET)	L.F.	356		356
606-02.03	STEEL PILES (10 INCH)	L.F.	379		379
615-01.03	PRESTRESSED CONCRETE I-BEAM (TYPE III)	L.F.	670		670
620-05	CONCRETE PARAPET WITH STRUCTURAL TUBING	L.F.	516		516
621-05.01	TEMPORARY SHORING	S.F.	1600		1600
710-09.01	6" PERFORATED PIPE WITH VERTICAL DRAIN SYSTEM	L.F.	196		196
710-09.02	6" PIPE UNDERDRAIN	L.F.	20		20

LIST OF DRAWINGS

LIST OF DRAWINGS	DWG. NO.	LAST REV. DATE
PEDESTRIAN BRIDGE		
LAYOUT OF BRIDGE	U-64-136	
THRU		
ENGINEERING GEOLOGY	U-64-150	
ARCHITECTURAL		
LEGEND AND DATA	U-64-151	
THRU		
BRIDGE LEVEL RCP	U-64-170	
MECHANICAL		
FIRST FLOOR PLAN	U-64-171	
THRU		
SCHEDULES AND DETAILS	U-64-173	
PLUMBING		
FIRST FLOOR PLAN	U-64-174	
THRU		
LEGEND, SCHEDULES, AND DETAILS	U-64-176	
FIRE PROTECTION		
FIRST FLOOR PLAN	U-64-177	
THRU		
LEGEND, SCHEDULES, AND DETAILS	U-64-179	
ELECTRICAL		
FIRST FLOOR PLAN	U-64-180	
THRU		
LEGEND, SCHEDULES, AND DETAILS	U-64-182	
SULLIVAN STREET EXT. BRIDGE		
LAYOUT OF BRIDGE	U-64-183	
THRU		
BILL OF STEEL	U-64-198	

LIST OF STANDARD DRAWINGS

LIST OF STANDARD DRAWINGS	DWG. NO.	LAST REV. DATE
BRIDGE END DRAIN DETAILS 2'X8'-7" & 4'X8'-7" WITH PAVEMENT AT BRIDGE ENDS	STD-1-6	4-28-97
BRIDGE END DRAIN DETAILS 2'X8'-7" & 4'X8'-7" WITH PAVEMENT AT BRIDGE ENDS	STD-1-7	8-24-11
BRIDGE END DRAIN DETAILS 2'X8'-7" WITH PAVEMENT AT BRIDGE ENDS	STD-1-8	5-1-95
STD. PRECAST PRESTRESSED BRIDGE DECK PANELS GENERAL DETAILS	STD-4-1	4-8-05
STD. PRECAST PRESTRESSED BRIDGE DECK PANELS DESIGN CRITERIA	STD-4-2	4-8-05
STD. PRECAST PRESTRESSED BRIDGE DECK PANELS GENERAL DETAILS	STD-4-3	3-2-02
STD. PRECAST PRESTRESSED BRIDGE DECK PANELS CONSTRUCTION DETAILS	STD-4-4	6-10-96
STD. PILE DETAILS	STD-5-1	10-25-93
STD. PILE DETAILS	STD-5-2	5-1-14
STANDARD SEISMIC DETAILS	STD-6-1	11-01-10
STANDARD SEISMIC DETAILS	STD-6-2	11-07-94
REINF. BAR SUPPORT DETAILS FOR CONC. SLABS	STD-9-1	10-07-08
MISCELLANEOUS ABUTMENT & DRAINAGE DETAILS	STD-10-1	4-8-05
BRIDGE RAILING CONCRETE PARAPET WITH STRUCTURAL TUBING	STD-11-1	5-1-14
STD. DETAILS AND INTERMEDIATE DIAPHRAGM DETAILS FOR I-BEAMS	STD-14-2	11-1-10

LIST OF SPECIAL PROVISIONS

LIST OF SPECIAL PROVISIONS	PROV. NO.	LAST REV. DATE
DRILLED SHAFT SPECIFICATIONS	625	3-1-06

UNOFFICIAL SET
NOT FOR BIDDING

CHAD M. THOMAS
REGISTERED ENGINEER
AGRICULTURE COMMERCE
No. 117359
STATE OF TENNESSEE
6/20/14

STATE OF TENNESSEE
DEPARTMENT OF TRANSPORTATION

ESTIMATED BRIDGE QUANTITIES

$$$$SYTIME$$$$$$
$$$$DGNSPEC$$

TYPE	YEAR	PROJECT NO.	SHEET NO.
CONST.	2014	82956-3288-04 STP-126(19)	2A

ESTIMATED ROADWAY QUANTITIES

	ITEM NO.	DESCRIPTION	UNIT	SIA PROJ. QUANTITY 82956-3288-04	SR126 PROJ. QUANTITY 82085-3236-14	TOTAL QUANTITY
	105-01	CONSTRUCTION STAKES, LINES AND GRADES	LS	0.5	0.5	1
	201-01	CLEARING AND GRUBBING	LS	0.5	0.5	1
	202-02.01	REMOVAL OF PIPE (15", STA. 123+55 TO STA. 124+80)	L.F.	0	120	120
	202-02.02	REMOVAL OF PIPE (12", STA. 123+90)	L.F.	0	26	26
	202-04.01	REMOVAL OF STRUCTURES (CB, STA. 123+90)	LS	0	1	1
	202-04.02	REMOVAL OF STRUCTURES (CB, STA. 124+50)	LS	0	1	1
12)	203-01	ROAD & DRAINAGE EXCAVATION (UNCLASSIFIED)	C.Y.	1218	880	2098
	203-06	WATER	M.G.	60	40	100
	209-05	SEDIMENT REMOVAL	C.Y.	25	25	50
1)	209-08.02	TEMPORARY SILT FENCE (WITH BACKING)	L.F.	1000	100	1100
1)	209-08.03	TEMPORARY SILT FENCE (WITHOUT BACKING)	L.F.	0	1000	1000
1)	209-09.03	SEDIMENT FILTER BAG (15' X 15')	EACH	1	0	1
1)	209-09.43	CURB INLET PROTECTION (TYPE 4)	EACH	4	1	5
1)	209-40.46	CATCH BASIN FILTER ASSEMBLY(TYPE 6)	EACH	1	8	9
1)	209-40.47	CATCH BASIN FILTER ASSEMBLY(TYPE 7)	EACH	0	2	2
2)	303-01	MINERAL AGGREGATE, TYPE A BASE, GRADING D	TON	432	404	836
	303-10.01	MINERAL AGGREGATE (SIZE 57)	TON	15	37	52
3)	307-01.08	ASPHALT CONCRETE MIX (PG64-22) (BPMB-HM) GRADING B-M2	TON	119	55	174
	307-02.01	ASPHALT CONCRETE MIX (PG70-22) (BPMB-HM) GRADING A	TON	0	63	63
	307-02.02	ASPHALT CEMENT (PG70-22)(BPMB-HM) GRADING A-S	TON	0	1.6	1.6
	307-02.03	AGGREGATE (BPMB-HM) GRADING A-S MIX	TON	0	48	48
	307-02.08	ASPHALT CONCRETE MIX (PG70-22) (BPMB-HM) GRADING B-M2	TON	0	41	41
	402-01	BITUMINOUS MATERIAL FOR PRIME COAT (PC)	TON	1.2	1.1	2.3
	403-01	BITUMINOUS MATERIAL FOR TACK COAT (TC)	TON	1.6	6.5	8.1
4)	411-01.10	ACS MIX (PG64-22) GRADING D	TON	51	24	75
	411-02.10	ACS MIX (PG70-22) GRADING D	TON	212	965	1177
	415-01.02	COLD PLANING BITUMINOUS PAVEMENT	S.Y.	3206	14195	17401
	607-03.02	18" CONCRETE PIPE CULVERT (CLASS III)	L.F.	28	61	89
	607-05.02	24" CONCRETE PIPE CULVERT (CLASS III)	L.F.	0	1225	1225
	611-01.03	MANHOLES, > 8' - 12' DEPTH	EACH	0	3	3
	611-07.01	CLASS A CONCRETE (PIPE ENDWALLS)	C.Y.	1.2	1.9	3.1
	611-07.02	STEEL BAR REINFORCEMENT (PIPE ENDWALLS)	LB.	40	68	108
	611-09.01	ADJUSTMENT OF EXISTING CATCHBASIN	EACH	1	0	1
	611-12.02	CATCH BASINS, TYPE 12, > 4' - 8' DEPTH	EACH	1	5	6
	611-12.03	CATCH BASINS, TYPE 12, > 8' - 12' DEPTH	EACH	0	3	3
	611-14.02	CATCH BASINS, TYPE 14, > 4' - 8' DEPTH	EACH	0	2	2
	701-01.01	CONCRETE SIDEWALK (4 ")	S.F.	3600	14600	18200
	701-02.03	CONCRETE CURB RAMP	S.F.	350	550	900
	702-01	CONCRETE CURB	C.Y.	4	0	4
	702-03	CONCRETE COMBINED CURB & GUTTER	C.Y.	14	73	87
	705-11.01	GUARDRAIL AT BRIDGE ENDS (POWDER COATED)	L.F.	54	0	54
	705-11.03	SINGLE GUARDRAIL (TYPE 2) (POWDER COATED)	L.F.	64	0	64
	705-11.13	GUARDRAIL TERMINAL (TYPE 21) (POWDER COATED)	EACH	2	0	2
	707-08.11	HIGH-VISIBILITY CONSTRUCTION FENCE	L.F.	400	50	450
1)	709-05.05	MACHINED RIP-RAP (CLASS A-3)	TON	340	80	420
	709-05.06	MACHINED RIP-RAP (CLASS A-1)	TON	382	40	422
	710-02	AGGREGATE UNDERDRAINS (WITH PIPE)	L.F.	0	310	310
	710-05	LATERAL UNDERDRAIN	L.F.	0	10	10
	712-01	TRAFFIC CONTROL	LS	0.5	0.5	1
	712-02.02	INTERCONNECTED PORTABLE BARRIER RAIL	L.F.	100	100	200
	712-04.01	FLEXIBLE DRUMS (CHANNELIZING)	EACH	25	75	100
	712-05.01	WARNING LIGHTS (TYPE A)	EACH	16	16	32
	712-06	SIGNS (CONSTRUCTION)	S.F.	79	144	223
	712-07.03	TEMPORARY BARRICADES (TYPE III)	L.F.	80	80	160
	712-08.03	ARROW BOARD (TYPE C)	EACH	2	0	2
5)	713-15.02	REMOVAL & RELOCATION OF SIGN & SUPPORT	EACH	0	1	1
6)	713-16.41	RELOCATE SIGN	LS	0.5	0.5	1

ESTIMATED ROADWAY QUANTITIES

	ITEM NO.	DESCRIPTION	UNIT	SIA PROJ. QUANTITY 82956-3288-04	SR126 PROJ. QUANTITY 82085-3236-14	TOTAL QUANTITY
7)	716-01.21	Snwplwble Pvmt Mrkrs (Bi-Dir)(1 Color)	EACH	0	60	60
7)	716-01.22	Snwplwble Pvmt Mrkrs (Mono-Dir)(1 Color)	EACH	0	40	40
9)	716-02.04	PLASTIC PAVEMENT MARKING (CHANNELIZATION STRIPING)	S.Y.	23	0	23
9)	716-02.05	PLASTIC PAVEMENT MARKING (STOP LINE)	L.F.	120	260	380
9)	716-02.06	PLASTIC PAVEMENT MARKING (TURN LANE ARROW)	EACH	11	9	20
9)	716-02.07	PLASTIC PAVEMENT MARKING (24" BARRIER LINE)	L.F.	50	165	215
9)	716-02.08	PLASTIC PAVEMENT MARKING (8" DOTTED LINE)	L.F.	0	440	440
9)	716-02.09	PLASTIC PAVEMENT MARKING (LONGITUDINAL CROSS-WALK)	L.F.	200	670	870
9)	716-03.01	PLASTIC WORD PAVEMENT MARKING (ONLY)	EACH	5	3	8
9)	716-04.01	PLASTIC PAVEMENT MARKING (STRAIGHT-TURN ARROW)	EACH	5	2	7
9)	716-04.02	PLASTIC PAVEMENT MARKING (DOUBLE TURNING ARROW)	EACH	0	2	2
9)	716-04.05	PLASTIC PAVEMENT MARKING (STRAIGHT ARROW)	EACH	1	0	1
	716-05.01	PAINTED PAVEMENT MARKING (4" LINE)	L.M.	0.2	0.3	0.5
	716-08.01	REMOVAL OF PAVEMENT MARKING (LINE)	L.F.	1500	0	1500
10)	716-10.23	PREFRMD PLSTC PVMNT MRKING 4IN LINE W/1.5IN BLACK SILHOUETTE	L.M.	0.1	0	0.1
7)	716-12.01	ENHANCED FLATLINE THERMO PVMT MRKNG (4IN LINE)	L.M.	0	1.7	1.7
8)	716-13.01	SPRAY THERMO PVMT MRKNG (60 mil) (4IN LINE)	L.M.	1.2	0.1	1.3
	717-01	MOBILIZATION	LS	0.5	0.5	1
1) 11)	740-10.03	GEOTEXTILE (TYPE III)(EROSION CONTROL)	S.Y.	650	210	860
1)	740-11.01	TEMPORARY SEDIMENT TUBE (8 INCH)	L.F.	80	240	320
	801-01.07	TEMPORARY SEEDING (WITH MULCH)	UNIT	6	6	12
	801-03	WATER (SEEDING & SODDING)	M.G.	8	11	19
	803-01	SODDING (NEW SOD)	S.Y.	700	1000	1700

1) SEE SUBSECTION 209.07 OF THE STANDARD SPECIFICATIONS FOR MAINTENANCE REPLACEMENT.
2) INCLUDES 6 TONS FOR REINFORCED TURF & ASPHALT SIDEWALK AT WILCOX ENTRANCE.
3) INCLUDES 2 TONS FOR ASPHALT SIDEWALK AT WILCOX ENTRANCE.
4) INCLUDES 1 TON FOR ASPHALT SIDEWALK AT WILCOX ENTRANCE.
5) FOR WAYFINDING SIGN & FOUNDATION ALONG S.R. 126 AT STA. 135+32. CONTRACTOR TO COORDINATE WITH TIM ELSEA (CITY OF KINGSPORT, 224-2426).
6) FOR RELOCATION OF SIGNS AND POSTS AS SHOWN ON SHEETS 4 & 5.
7) TO BE USED ALONG S.R. 126.
8) TO BE USED ALONG LINCOLN STREET, SULLIVAN STREET, AND BOTH NEW ENTRANCES.
9) THE CONTRACTOR MAY ELECT TO SUBSTITUTE PREFORMED PLASTIC FOR THERMOPLASTIC. PREFORMED PLASTIC SHALL BE PAID FOR AT THE SAME UNIT PRICE AS BID FOR THERMOPLASTIC.
10) FOR USE ON MADD BRANCH BRIDGE DECK.
11) INCLUDES 10 S.Y. FOR REINFORCED TURF AT WILCOX ENTRANCE.
12) REFER TO SPECIAL NOTES.

UNOFFICIAL SET

NOT FOR BIDDING

SEALED BY

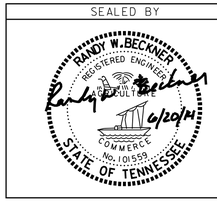

STATE OF TENNESSEE
DEPARTMENT OF TRANSPORTATION

ESTIMATED ROADWAY QUANTITIES

6/19/2014 4:03:26 PM
H:\3131G - Sullivan Co Eastman SIA\002_SecondSheets.sht

TYPE	YEAR	PROJECT NO.	SHEET NO.
CONST.	2014	82956-3288-04 STP-126(19)	2B

ESTIMATED ROADWAY QUANTITIES

	ITEM NO.	DESCRIPTION	UNIT	SIA PROJ. QUANTITY 82956-3288-04	SR126 PROJ. QUANTITY 82085-3236-14	TOTAL QUANTITY
	725-23.27	FIBER OPTIC CLOSURE (24-F)	EACH	0	3	3
	730-01.02	REMOVAL OF SIGNAL EQUIPMENT	EACH	1	2	3
	730-02.09	SIGNAL HEAD ASSEMBLY (130 WITH BACKPLATE)	EACH	4	21	25
	730-02.13	SIGNAL HEAD ASSEMBLY (140 A1)	EACH	2	0	2
	730-02.17	SIGNAL HEAD ASSEMBLY (150 A2H WITH BACKPLATE)	EACH	1	4	5
	730-02.30	SIGNAL HEAD ASSEMBLY (130 A3 WITH BACKPLATE)	EACH	2	2	4
1)	730-02.31	SIGNAL HEAD ASSEMBLY (FLASHING YELLOW ARROW)	EACH	1	5	6
	730-03.21	INSTALL PULL BOX (TYPE B)	EACH	4	19	23
	730-03.24	INSTALL PULL BOX (FIBER OPTIC-TYPE B)	EACH	0	3	3
2)	730-05.01	ELECTRICAL SERVICE CONNECTION	EACH	1	3	4
	730-05.02	SERVICE CABLE (2 CONDUCTOR, # 8 AWG)	L.F.	50	200	250
	730-08.01	SIGNAL CABLE - 3 CONDUCTOR	L.F.	400	1600	2000
	730-08.02	SIGNAL CABLE - 5 CONDUCTOR	L.F.	800	3300	4100
	730-08.03	SIGNAL CABLE - 7 CONDUCTOR	L.F.	1000	3300	4300
	730-08.04	SIGNAL CABLE - 9 CONDUCTOR	L.F.	250	0	250
	730-08.40	INTERCONNECT CABLE - FIBER OPTIC (24-F HYBRID)	L.F.	0	1900	1900
	730-08.41	INTERCONNECT CABLE - FIBER OPTIC (4-F MM DROP CABLE)	L.F.	600	250	850
	730-12.03	CONDUIT 3" DIAMETER (PVC)	L.F.	100	600	700
	730-12.07	CONDUIT 1" DIAMETER (RGS)	L.F.	50	300	350
	730-12.09	CONDUIT 3" DIAMETER (RGS)	L.F.	100	60	160
3)	730-12.13	CONDUIT 2" DIAMETER (JACK AND BORE)	L.F.	100	300	400
3)	730-12.14	CONDUIT 3" DIAMETER (JACK AND BORE)	L.F.	200	700	900
4)	730-13.02	VEHICLE DETECTOR (VIDEO)	EACH	4	12	16
5)	730-15.32	CABINET (EIGHT PHASE BASE MOUNTED)	EACH	1	3	4
6)	730-16.02	EIGHT PHASE ACTUATED CONTROLLER	EACH	1	3	4
	730-23.30	PEDESTAL POLE (DESCRIPTION)	EACH	0	3	3
	730-23.36	CANTILEVER SIGNAL SUPPORT (1 ARM @ 75' & 90')	EACH	0	1	1
	730-23.37	CANTILEVER SIGNAL SUPPORT (2 ARMS @ 60')	EACH	0	1	1
	730-23.38	CANTILEVER SIGNAL SUPPORT (1 ARM @ 65')	EACH	0	1	1
	730-23.80	CANTILEVER SIGNAL SUPPORT (1 ARM @ 40')	EACH	1	0	1
	730-23.96	CANTILEVER SIGNAL SUPPORT (1 ARM @ 50')	EACH	0	1	1
	730-23.97	CANTILEVER SIGNAL SUPPORT (1 ARM @ 55')	EACH	2	0	2
	730-23.98	CANTILEVER SIGNAL SUPPORT (1 ARM @ 60')	EACH	1	4	5
	730-23.99	CANTILEVER SIGNAL SUPPORT (1 ARM @ 50' & 55')	EACH	0	1	1
	730-26.10	PEDESTRIAN SIGNAL HEAD W/PUSHBUTTON & 15IN SIGN	EACH	6	16	22

1) INCLUDES R10-5 SIGN.
2) THE CONTRACTOR WILL BE RESPONSIBLE FOR CONTACTING THE LOCAL UTILITY TO OBTAIN THE ESTIMATE FOR ANY CHARGES BY THE UTILITY FOR PROVIDING ELECTRICAL SERVICE TO THE SIGNAL CONTROLLER. THESE CHARGES SHALL BE INCLUDED IN THE PRICE BID FOR THIS ITEM FOR PAYMENT BY THE CONTRACTOR.
3) TO BE RGS.
4) TO BE AN ECONOLITE ENCORE OR EQUAL. ITEM INCLUDES ALL REQUIRED CAMERA SENSING UNITS, PROCESSOR UNITS, HARDWARE, SOFTWARE, MOUNTING ASSEMBLIES, 3-CONDUCTOR POWER CABLE, COAXIAL CABLE, SURGE PROTECTION, AND RELATED EQUIPMENT TO PROVIDE ALL DETECTION ZONES AS SHOWN ON PLANS. CONTRACTOR TO ENSURE COMPATABILITY WITH CONTROLLER.
5) TO BE AN ECONOLITE TS 2, TYPE 1.
6) CONTROLLER TO BE AN ECONOLITE COBALT OR EQUAL. CONFLICT MONITOR TO BE A RENO 1600GE OR EQUAL. FIBER-OPTIC DROP CABLES ARE TO TERMINATE IN A SIECOR BOX IN THE CABINET. TWO SC/PC - ST/PC FIBER PATCH CABLES WILL CONNECT THE SIECOR BOX TO AN ETHERWAN 71620-A0B SWITCH. A CAT-5 CABLE (5' IN LENGTH) WITH RJ45/RJ45 CONNECTIONS WILL CONNECT THE ETHERNET SWITCH TO THE CONTROLLER. ITEM INCLUDES PAYMENT FOR ALL OF THE ABOVE EQUIPMENT.

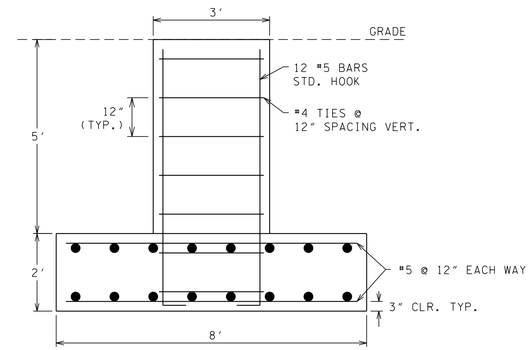

SIGNAL POLE B FOUNDATION
SECTION THROUGH FOOTING

SEE SHEET 13 FOR LOCATION

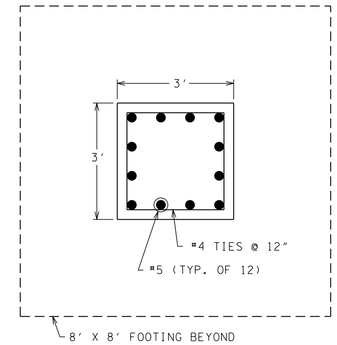

SECTION THROUGH PEDESTAL

SEE SHEET 13 FOR LOCATION

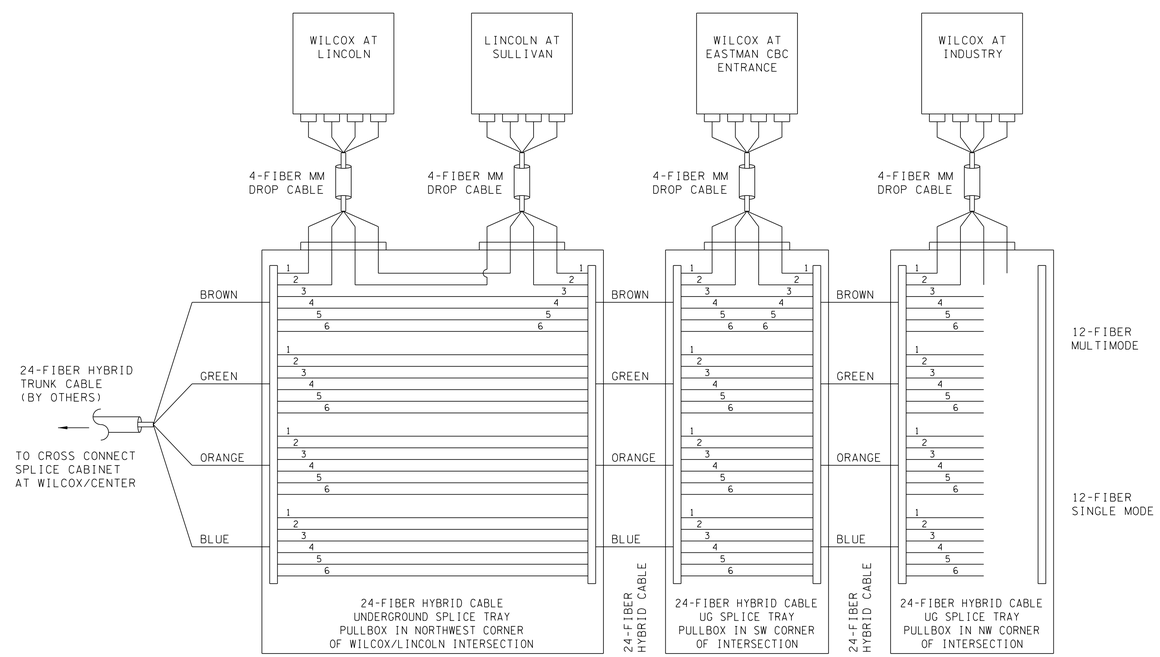

FIBER-OPTIC CABLE
SPLICE DETAILS

SEE PLANS FOR LOCATIONS

UNOFFICIAL SET

NOT FOR BIDDING

SEALED BY

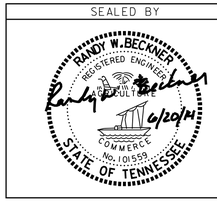

STATE OF TENNESSEE
DEPARTMENT OF TRANSPORTATION

ESTIMATED SIGNAL QUANTITIES AND DETAILS

6/20/2014 9:33:20 AM
H:\3131G - Sullivan Co Eastman SIA\002_SecondSheets.sht

TYPE	YEAR	PROJECT NO.	SHEET NO.
CONST.	2014	82956-3288-04 STP-126(19)	2C

ESTIMATED UTILITY QUANTITIES

82085-3236-14

ITEM NO.	DESCRIPTION	UNIT	QUANTITY
793-01.02	POLE 30FT CLASS 5 WOOD	EACH	1
793-04.01	RELASH/DELASH CABLE	L.F.	150
793-04.12	UNDERGROUND SPLICE CLOSURE	EACH	1
793-07.23	FIBER OPTIC MAINTENANCE LOOP	EACH	2
793-11.17	COMPOSITE HANDHOLE 5FTX3FTX3FT	EACH	5
793-12.02	REARRANGEMENT EXISTING CABLE	EACH	2
793-13.06	25 PAIR GROUP UG SPLICE	EACH	4
793-13.12	1 DUCT FORMATION @ 36IN DEPTH	L.F.	25
793-13.17	2 DUCT FORMATION @ 36IN DEPTH	L.F.	2860
793-13.27	4 DUCT FORMATION @ 36IN DEPTH	L.F.	230
793-13.32	6 DUCT FORMATION @ 36IN DEPTH	L.F.	55
793-14.01	SAND ENDCASEMENT PER DUCT	L.F.	3170
793-14.10	4IN CORE DRILL INTO MANHOLE	EACH	20
793-15.05	TRANSFER DIP CABLE/EQUIPMENT	EACH	1
793-16.21	ADJUST MANHOLE LID	EACH	4
793-98.01	REMOVE AERIAL CABLE AND WIRE	L.F.	2985
793-98.04	REMOVE POLES ALL SIZES	EACH	11
793-98.07	REMOVE UNDERGROUND TO OVERHEAD RISER	EACH	2
793-98.08	REMOVE ANCHOR (ANY SIZE)	EACH	2
795.09.09	RELOCATE/RECONNECT SERVICE ASSEMBLY	EA	1
795.99.01	4FTX4FT METER VAULT	EA	2
795-01.14	16IN DIP SLIP JOINT WATERLINE	LF	1700
795-06.04	CONNECT TO 6IN WATERLINE	EA	3
795-06.06	CONNECT TO 10IN WATERLINE	EA	3
795-06.09	CONNECT TO 16 IN WATERLINE	EA	3
795-08.01	2IN GATE VALVE ASSEMBLY	EA	1
795-08.04	6IN GATE VALVE ASSEMBLY	EA	3
795-08.05	8IN GATE VALVE ASSEMBLY	EA	1
795-08.06	10IN GATE VALVE ASSEMBLY	EA	2
795-08.13	16IN BUTTERFLY VALVE ASSEMBLY	EA	4
795-09.04	2IN WATER SERVICE METER ASSEMBLY	EA	1
795-09.07	6IN WATER SERVICE METER ASSEMBLY	EA	2
795-09.08	8IN WATER SERVICE METER ASSEMBLY	EA	1
795-11.02	FIRE HYDRANT ASSEMBLY	EA	4
795-12.01	REMOVE FIRE HYDRANT	EA	3
795-99.02	4FTX6FT METER VAULT	EA	1
797-11.15	48" MH ADJUSTMENT INCREASE HEIGHT	VLF	5
798-02.03	4IN DIAMETER CONDUIT (PVC)	L.F.	4475
798-03.02	1 DUCT FORMATION @ 36IN DEPTH	L.F.	250
798-03.07	2 DUCT FORMATION @ 36IN DEPTH	L.F.	1600
798-05.03	FIBER OPTIC CABLE SPLICE	EACH	10
798-05.04	1/4IN EHS STEEL STRAND	L.F.	100
798-05.09	TRUNK/FEEDER CABLE .625	L.F.	650
798-05.16	TRUNK/FEEDER CABLE .875	L.F.	3800
798-05.33	COMMUNICATIONS ASSEMBLY (DE)	EACH	4
798-05.34	COMMUNICATIONS ASSEMBLY (E1-2)	EACH	4
798-05.37	COMMUNICATIONS ASSEMBLY (F2&F3)	EACH	4
798-05.40	COMMUNICATIONS ASSEMBLY (FOSS)	EACH	4
798-05.42	COMMUNICATIONS ASSEMBLY (LX)	EACH	1
798-05.46	COMMUNICATIONS ASSEMBLY (RISER)	EACH	4
798-05.53	COMMUNICATIONS ASSEMBLY (SPLICE)	EACH	5
798-06.01	FIBER NODE 870MHZ	EACH	1
798-06.04	FIBER OPTIC CABLE (12F)	L.F.	1070
798-06.13	FIBER OPTIC CABLE (36F)	L.F.	4000
798-07.02	PEDESTAL CABINET	EACH	2
798-08.06	TRANSFER FIBER OPTIC CABLE	EACH	2
798-08.08	TRANSFER TRUNK CABLE	EACH	2

ESTIMATED UTILITY QUANTITIES

82085-3236-14

ITEM NO.	DESCRIPTION	UNIT	QUANTITY
798-09.01	REMOVE STEEL STRAND	L.F.	1600
798-09.02	REMOVE AERIAL CABLE/TERMINALS	L.F.	1600
798-11.20	HANDHOLE 30INX48IN	EACH	5

SEE SHEET U1-1 FOR INDEX OF UTILITY SHEETS. APPLICABLE FOOTNOTES FOR ESTIMATED UTILITIES QUANTITIES WILL BE ON THE UTILITY TABULATION BLOCKS.

UNOFFICIAL SET

NOT FOR BIDDING

SEALED BY

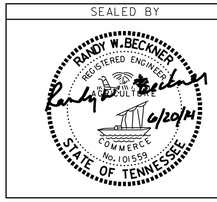

STATE OF TENNESSEE
DEPARTMENT OF TRANSPORTATION

ESTIMATED UTILITIES QUANTITIES

6/19/2014 4:04:26 PM
H:\3131G - Sullivan Co Eastman SIA\002_SecondSheets.sht

TYPE	YEAR	PROJECT NO.	SHEET NO.
R.O.W.	2014	82956-2288-04 82085-2236-04	2
CONST.	2014	82956-3288-04 STP-126(19)	2D

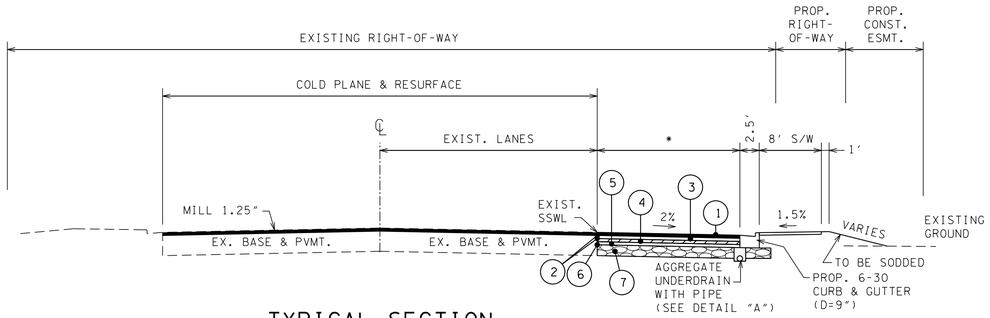

TYPICAL SECTION

STD. DWG. RD01-TS-6A
S.R. 126 STA. 120+53.29 TO STA. 130+77.59

* 0', STA. 120+53.29 TO STA. 121+85.42
VARIES 0' TO 12', STA. 121+85.42 TO STA. 123+48
12', STA. 123+48 TO STA. 125+14.24
0', STA. 125+14.24 TO STA. 130+77.59

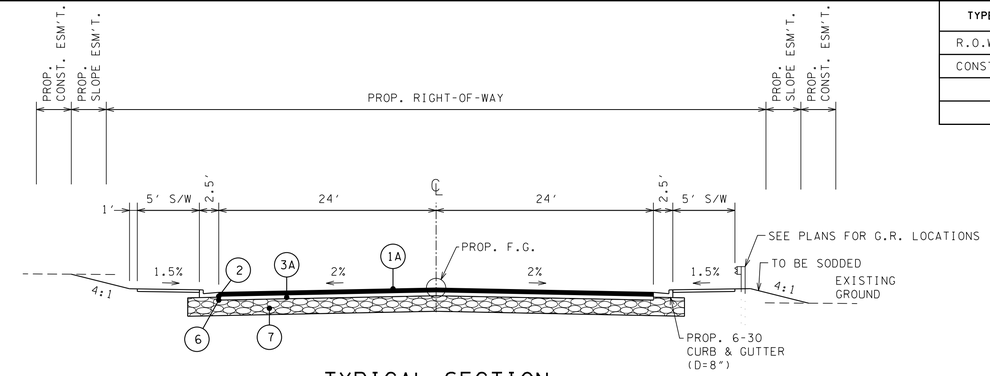

TYPICAL SECTION

STD. DWG. RD01-TS-6A
SULLIVAN ST. EXT. STA. 55+35.67 TO STA. 57+25

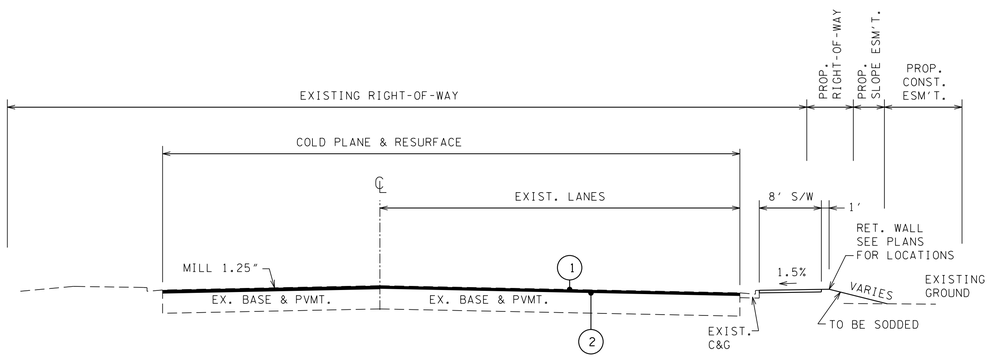

TYPICAL SECTION

STD. DWG. RD01-TS-6A
S.R. 126 STA. 131+31.53 TO STA. 137+15
LINCOLN ST. STA. 20+63 TO STA. 25+84

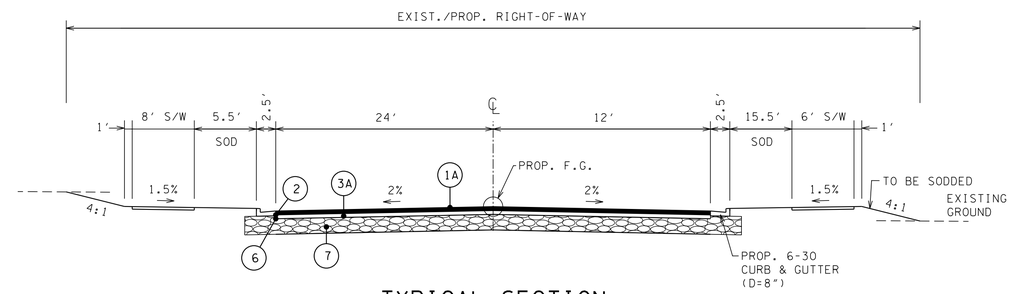

TYPICAL SECTION

STD. DWG. RD01-TS-6A
WILCOX ENTRANCE STA. 60+35 TO STA. 61+10

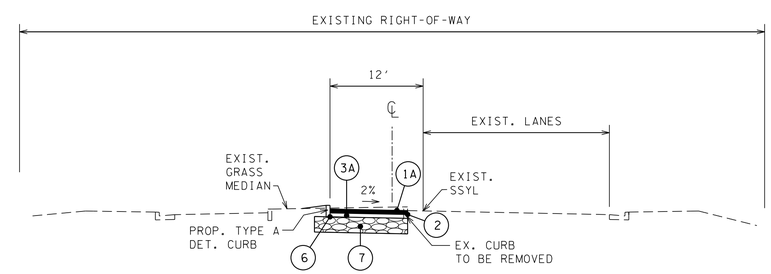

TYPICAL SECTION

STD. DWG. RD01-TS-6A
SULLIVAN ST. STA. 52+82 TO STA. 54+20

PROPOSED PAVEMENT SCHEDULE

1	ASPHALTIC CONCRETE SURFACE, 1.25" THICKNESS 411-02.10: ACS MIX (PG70-22), GRADING D (APPROX. 132.5 LB/SY)
1A	ASPHALTIC CONCRETE SURFACE, 1.25" THICKNESS 411-01.10: ACS MIX (PG64-22), GRADING D (APPROX. 132.5 LB/SY)
2	TACK COAT 403-01: BITUMINOUS MATERIAL FOR TACK COAT (RATE 0.10 GAL/SY)
3	BITUMINOUS BINDER, 2" THICKNESS 307-02.08: ASPHALT CONCRETE MIX (PG70-22), GRADING B-M2 (APPROX. 226 LB/SY)
3A	BITUMINOUS BINDER, 2.75" THICKNESS 307-01.08: ASPHALT CONCRETE MIX (PG64-22), GRADING B-M2 (APPROX. 311 LB/SY)
4	BITUMINOUS BASE, 3" THICKNESS 307-02.01: ASPHALT CONCRETE MIX (PG70-22), GRADING A (APPROX. 345 LB/SY)
5	BITUMINOUS BASE, 3" THICKNESS 307-02.02: ASPHALT CEMENT (PG70-22), GRADING A-S (APPROX. 8.8 LB/SY) 307-02.03: AGGREGATE, GRADING A-S (APPROX. 261 LB/SY)
6	PRIME COAT 402-01: BITUMINOUS MATERIAL FOR PRIME COAT (RATE 0.35 GAL/SY)
7	MINERAL AGGREGATE BASE, 10" THICKNESS 303-01: MINERAL AGGREGATE, TYPE A BASE, GRADING D

UNOFFICIAL SET

NOT FOR BIDDING

SEALED BY

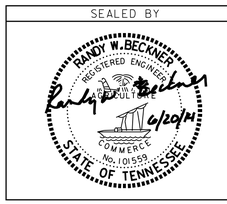

STATE OF TENNESSEE
DEPARTMENT OF TRANSPORTATION

TYPICAL SECTIONS

6/19/2014 4:04:47 PM
H:\3131G - Sullivan Co Eastman SIA\002_SecondSheets.sht

TYPE	YEAR	PROJECT NO.	SHEET NO.
CONST.	2014	82956-3288-04 STP-126(19)	2E

GENERAL NOTES

GRADING

(1) ANY AREA THAT IS DISTURBED OUTSIDE LIMITS OF CONSTRUCTION DURING THE LIFE OF THIS PROJECT SHALL BE REPAIRED BY THE CONTRACTOR AT HIS EXPENSE.

(2) THE CONTRACTOR SHALL NOT DISPOSE OF ANY MATERIAL EITHER ON OR OFF STATE-OWNED R.O.W. IN A REGULATORY FLOOD WAY AS DEFINED BY THE FEDERAL EMERGENCY MANAGEMENT AGENCY WITHOUT APPROVAL BY SAME. ALL MATERIAL SHALL BE DISPOSED OF IN UPLAND (NON-WETLAND) AREAS AND ABOVE ORDINARY HIGH WATER OF ANY ADJACENT WATERCOURSE. THIS DOES NOT ELIMINATE THE NEED TO OBTAIN ANY OTHER LICENSES OR PERMITS THAT MAY BE REQUIRED BY ANY OTHER FEDERAL, STATE OR LOCAL AGENCY.

SEEDING AND SODDING

(1) ALL EXISTING ROADS WITHIN THE RIGHT-OF-WAY AND NOT IN THE GRADED AREA THAT ARE TO BE ABANDONED SHALL BE SCARIFIED, OBLITERATED, TOPSOILED AND SEEDED. SCARIFYING AND OBLITERATING THE PAVEMENT WILL NOT BE MEASURED AND PAID FOR DIRECTLY, BUT THE COST WILL BE INCLUDED IN THE COST OF OTHER ITEMS. TOPSOIL, IN ACCORDANCE WITH SECTION 203 OF THE STANDARD SPECIFICATIONS, WILL BE MEASURED AND PAID FOR UNDER ITEMS 203-04 AND/OR 203-07. SEEDING, IN ACCORDANCE WITH SECTION 801 OF THE STANDARD SPECIFICATIONS, WILL BE MEASURED AND PAID FOR UNDER ITEM 801-01.

(2) SOD SHALL BE PLACED AT LOCATIONS SHOWN ON THE PLANS TO PREVENT DAMAGE TO ADJACENT FACILITIES AND PROPERTY DUE TO EROSION ON ALL NEWLY GRADED CUT AND FILL SLOPES AS WORK PROGRESSES.

GUARDRAIL

(1) IF ANY APPROACH END OF A SECTION OF GUARDRAIL OR BRIDGE RAIL MUST TEMPORARILY BE LEFT INCOMPLETE AND EXPOSED TO TRAFFIC, THE CONTRACTOR SHALL USE TWO (2) TEMPORARY BARRICADES OR DRUMS WITH TYPE A LIGHTS AND ROUNDED END ELEMENTS AS MINIMUM MEASURES TO PROTECT TRAFFIC FROM THE HAZARD OF AN EXPOSED END. ALL COST OF FURNISHING AND INSTALLING A TEMPORARY ROUNDED END ELEMENT SHALL BE INCLUDED IN THE COST OF THE PROPOSED GUARDRAIL.

(2) GUARDRAIL IS TO BE COMPLETE IN PLACE BEFORE THE MAINLINE ROADWAY IS OPENED TO TRAFFIC.

DRAINAGE

(1) THE CONTRACTOR SHALL SHAPE DITCHES TO THE SPECIFIED DESIGN. THIS WORK WILL NOT BE MEASURED AND PAID FOR DIRECTLY, BUT THE COST WILL BE INCLUDED IN THE COST OF OTHER ITEMS.

(2) EXCAVATION FOR STORM SEWERS WILL NOT BE MEASURED AND PAID FOR DIRECTLY, BUT WILL BE INCLUDED IN THE PRICE BID PER LINEAR FOOT OF PIPE.

(3) CULVERT EXCAVATION FOR CONCRETE BOX OR SLAB TYPE CULVERTS OR BRIDGES WILL NOT BE MEASURED AND PAID FOR DIRECTLY, BUT THE COST WILL BE INCLUDED IN THE COST OF OTHER ITEMS.

(4) DURING CONSTRUCTION OF DRAINAGE STRUCTURES ALL COST ASSOCIATED WITH MAINTAINING THE FLOW OF WATER AND TRAFFIC, AT THESE STRUCTURES, DURING THE PHASED CONSTRUCTION OF THIS PROJECT ARE TO BE INCLUDED IN THE UNIT PRICE OF THE DRAINAGE STRUCTURES AND TRAFFIC CONTROL ITEMS.

UTILITIES

(1) SEE SHEET 3.

MISCELLANEOUS

(1) NOTHING IN THE GENERAL NOTES OR SPECIAL PROVISIONS SHALL RELIEVE THE CONTRACTOR FROM HIS RESPONSIBILITIES TOWARD THE SAFETY AND CONVENIENCE OF THE GENERAL PUBLIC AND THE RESIDENTS ALONG THE PROPOSED CONSTRUCTION AREA.

RIGHT - OF – WAY

(2) SEE SHEET 3.

PAVEMENT MARKINGS

FINAL PAVEMENT MARKING IF 4" ENHANCED FLATLINE THERMOPLASTIC IS USED

(1) PERMANENT PAVEMENT LINE MARKINGS SHALL BE 4" ENHANCED FLATLINE THERMOPLASTIC INSTALLED TO PERMANENT STANDARDS AT THE END OF EACH DAY'S WORK. SHORT UNMARKED SECTIONS SHALL NOT BE ALLOWED. PAVEMENT MARKINGS WILL BE MEASURED AND PAID FOR UNDER ITEM NO. 716-12.01, ENHANCED FLATLINE THERMO PVMT MRKNG (4IN LINE), L.M. THE CONTRACTOR SHALL HAVE THE OPTION OF USING REFLECTORIZED PAINT INSTALLED TO PERMANENT STANDARDS AT THE END OF EACH DAY'S WORK AND THEN INSTALLING THE PERMANENT MARKINGS AFTER THE PAVING OPERATION IS COMPLETED. THE TEMPORARY MARKINGS FOR THE FINAL SURFACE WILL NOT BE MEASURED AND PAID FOR DIRECTLY, BUT THE COSTS ARE TO BE INCLUDED IN THE PRICE BID FOR THE PERMANENT MARKINGS.

FINAL PAVEMENT MARKING IF 4" SPRAY THERMOPLASTIC (60 mil) IS USED

(2) PERMANENT PAVEMENT LINE MARKINGS SHALL BE 4" SPRAY THERMOPLASTIC (60 mil) INSTALLED TO PERMANENT STANDARDS AT THE END OF EACH DAY'S WORK. SHORT UNMARKED SECTIONS SHALL NOT BE ALLOWED. PAVEMENT MARKINGS WILL BE MEASURED AND PAID FOR UNDER ITEM NO. 716-13.01, SPRAY THERMO PVMT MRKNG (60 mil) (4IN LINE), L.M. THE CONTRACTOR SHALL HAVE THE OPTION OF USING REFLECTORIZED PAINT INSTALLED TO PERMANENT STANDARDS AT THE END OF EACH DAY'S WORK AND THEN INSTALLING THE PERMANENT MARKINGS AFTER THE PAVING OPERATION IS COMPLETED. THE TEMPORARY MARKINGS FOR THE FINAL SURFACE WILL NOT BE MEASURED AND PAID FOR DIRECTLY, BUT THE COSTS ARE TO BE INCLUDED IN THE PRICE BID FOR THE PERMANENT MARKINGS.

DETOURS, LANE SHIFTS AND MEDIAN CROSS-OVERS

(3) BEFORE OPENING THE LANE SHIFT TO TRAFFIC, THE TRANSITIONAL MARKINGS ON THE EXISTING ROADWAY MUST BE IN PLACE. ALL EXISTING MARKINGS IN THE AREA OF THESE TRANSITIONAL MARKINGS SHALL BE OBLITERATED AND ALL EXISTING RAISED PAVEMENT MARKERS SHALL BE REMOVED TO ELIMINATE CONFLICTING MARKINGS. REMOVAL OF THE EXISTING CONFLICTING MARKINGS AND RAISED PAVEMENT MARKERS WILL NOT BE MEASURED AND PAID FOR DIRECTLY, BUT THE COST WILL BE INCLUDED IN ITEM NO. 712-01 TRAFFIC CONTROL, LUMP SUM.

PAVEMENT

PAVING

(1) THE CONTRACTOR SHALL BE REQUIRED TO PAVE IN THE DIRECTION OF TRAFFIC.

(2) THE CONTRACTOR SHALL BE REQUIRED TO COLD PLANE AND PAVE IN THE DIRECTION OF TRAFFIC.

RESURFACING

(3) WHERE DIRECTED BY THE TDOT ENGINEER, THE CONTRACTOR SHALL BE REQUIRED TO SHAPE PUBLIC SIDE ROADS, BUSINESS ENTRANCES, AND PRIVATE DRIVES, AS WELL AS CLEANING OF EXISTING DRAINS BEFORE PLACING MATERIALS. ALL COSTS ARE TO BE INCLUDED IN THE PRICE BID FOR OTHER ITEMS OF CONSTRUCTION.

(4) ON CURB AND GUTTER SECTIONS, PUBLIC ROAD INTERSECTIONS SHALL BE RESURFACED TO THE END OF RADIUS. A SATISFACTORY TRANSITION FROM THE NEW PAVEMENT TO THE EXISTING GRADE OF THE INTERSECTING PUBLIC ROAD SHALL BE PROVIDED.

(5) ON URBAN TYPICAL SECTIONS, (CURB AND GUTTER), RESIDENTIAL DRIVEWAYS AND BUSINESS ENTRANCES SHALL HAVE A MINIMUM WIDTH OF MATERIAL NOT LESS THAN ONE FOOT USED IN THE TRANSITION TO FEATHER THE PAVEMENT EDGE.

(6) IN ALL CASES, THE LENGTH OF THE PAVEMENT TRANSITION, THE THICKNESS AND WIDTH OF THE RESURFACING AND ANY ADDITIONAL PAVEMENT MATERIALS SHALL BE AS DIRECTED BY THE TDOT ENGINEER.

SIGNING

(1) THE TOP OF THE SIGN FOOTINGS SHALL BE PLACED LEVEL WITH THE GROUND LINE.

(2) AFTER THE SIGN LOCATIONS HAVE BEEN STAKED, BUT PRIOR TO ORDERING ANY MATERIAL FOR THE SUPPORTS, THERE SHALL BE A FIELD INSPECTION AND APPROVAL BY THE REGIONAL CONSTRUCTION OFFICE.

(3) ALL SIGNS MARKED "TO BE REMOVED" ARE TO BE REMOVED BY THE CONTRACTOR AND PAID FOR UNDER ITEM 713-15 AND BECOME THE PROPERTY OF THE CONTRACTOR.

(4) THE EXISTING FOOTINGS ARE TO BE REMOVED 6 INCHES BELOW GROUND LINE.

TRAFFIC CONTROL DIRECTIONAL SIGNING

(1) WHEN EXISTING "TOURIST ORIENTED DIRECTIONAL SIGNS" (TODS) ARE ON NON-ACCESS CONTROLLED CONSTRUCTION PROJECTS, THE CONTRACTOR SHALL BE RESPONSIBLE FOR KEEPING THESE SIGNS IN FULL VIEW TO THE MOTORING PUBLIC DURING ALL PHASES OF CONSTRUCTION. ALL WORK IN MOVING THESE "TODS" AND TEMPORARY SUPPORTS ARE TO BE PAID FOR UNDER ITEM NO. 713-15.02, AS DIRECTED BY THE ENGINEER. NEW SUPPORTS AND SIGN FACE FOR FINAL LOCATION WILL BE PAID FOR UNDER OTHER ITEMS OF CONSTRUCTION.

SIGNALIZATION

(1) EQUIPMENT AND INSTALLATION OF TRAFFIC SIGNALS SHALL COMPLY WITH TDOT STANDARD SPECIFICATIONS, SECTION 730.

(2) SALVAGEABLE EQUIPMENT SHALL BECOME THE PROPERTY OF THE CITY AND SHALL BE STOCKPILED AT A LOCATION DESIGNATED BY THE ENGINEER FOR PICKUP BY THE CITY.

(3) ANY SIGNAL HEADS, WHEN VISIBLE TO DRIVERS BUT NOT OPERATIONAL, SHALL BE COMPLETELY COVERED.

(4) SIGNAL HEADS SHALL FLASH A MINIMUM OF SEVEN (7) DAYS PRIOR TO ACTIVATION OF THE SIGNAL.

(5) THE PROJECT ENGINEER SHALL NOTIFY THE LOCAL GOVERNMENTAL AGENCY RESPONSIBLE FOR TRAFFIC CONTROL MAINTENANCE AT LEAST ONE DAY IN ADVANCE OF THE COLD PLANING ACTIVITY AT SIGNALIZED INTERSECTIONS WHERE DETECTOR LOOPS ARE ON THE PAVEMENT. THE MAINTAINING AGENCY WILL THEN BE RESPONSIBLE FOR DISCONNECTING THE LOOP DETECTORS AND MAKING ANY NECESSARY TIMING ADJUSTMENTS IN THE SIGNAL CONTROLLER PRIOR TO THE CONSTRUCTION.

CONSTRUCTION WORK ZONE & TRAFFIC CONTROL

(1) ADVANCED WARNING SIGNS SHALL NOT BE DISPLAYED MORE THAN FORTY-EIGHT (48) HOURS BEFORE PHYSICAL CONSTRUCTION BEGINS. SIGNS MAY BE ERECTED UP TO ONE WEEK BEFORE NEEDED, IF THE SIGN FACE IS FULLY COVERED.

(2) IF THE CONTRACTOR MOVES OFF THE PROJECT, HE SHALL COVER OR REMOVE ALL UNNEEDED SIGNS AS DIRECTED BY THE ENGINEER. COSTS OF REMOVAL, COVERING, AND REINSTALLING SIGNS SHALL NOT BE MEASURED AND PAID FOR SEPARATELY, BUT ALL COSTS SHALL BE INCLUDED IN THE ORIGINAL UNIT PRICE BID FOR ITEM NO 712-06, SIGNS (CONSTRUCTION) PER SQUARE FOOT.

(3) A LONG TERM BUT SPORADIC USE WARNING SIGN, SUCH AS A FLAGGER SIGN, MAY REMAIN IN PLACE WHEN NOT REQUIRED PROVIDED THE SIGN FACE IS FULLY COVERED.

(4) TRAFFIC CONTROL DEVICES SHALL NOT BE DISPLAYED OR ERECTED UNLESS RELATED CONDITIONS ARE PRESENT NECESSITATING WARNING.

(5) USE OF BARRICADES, PORTABLE BARRIER RAILS, VERTICAL PANELS, AND DRUMS SHALL BE LIMITED TO THE IMMEDIATE AREAS OF CONSTRUCTION WHERE A HAZARD IS PRESENT. THESE DEVICES SHALL NOT BE STORED ALONG THE ROADWAY WITHIN THIRTY (30) FEET OF THE EDGE OF THE TRAVELED WAY BEFORE OR AFTER USE UNLESS PROTECTED BY GUARDRAIL, BRIDGE RAIL, AND/OR BARRIERS INSTALLED FOR OTHER PURPOSES FOR ROADWAYS WITH CURRENT ADT'S LESS THAN 1500 AND DESIGN SPEED OF LESS THAN 60 MPH. THIS DISTANCE SHALL INCREASE TO FORTY-FIVE (45) FEET FOR ROADWAYS WITH CURRENT ADT'S OF 1500 OR GREATER AND DESIGN SPEED OF 60 MPH OR GREATER OR ON THE OUTSIDE OF A HORIZONTAL CURVE. THESE DEVICES SHALL BE REMOVED FROM THE CONSTRUCTION WORK ZONE WHEN THE ENGINEER DETERMINES THEY ARE NO LONGER NEEDED. WHERE THERE IS INSUFFICIENT RIGHT-OF-WAY TO PROVIDE FOR THIS REQUIRED SETBACK, THE CONTRACTOR SHALL DETERMINE THE ALTERNATE LOCATIONS AND REQUEST THE ENGINEER'S APPROVAL TO USE THEM.

UNOFFICIAL SET

NOT FOR BIDDING

SEALED BY

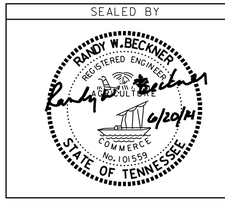

STATE OF TENNESSEE
DEPARTMENT OF TRANSPORTATION

GENERAL NOTES

6/19/2014 4:05:10 PM
H:\3131G - Sullivan Co Eastman SIA\002_SecondSheets.sht

TYPE	YEAR	PROJECT NO.	SHEET NO.
CONST.	2014	82956-3288-04 STP-126(19)	2F

(1) THE CONTRACTOR SHALL NOT BE PERMITTED TO PARK ANY VEHICLES OR CONSTRUCTION EQUIPMENT DURING PERIODS OF INACTIVITY, WITHIN THIRTY (30) FEET OF THE EDGE OF PAVEMENT WHEN THE LANE IS OPEN TO TRAFFIC UNLESS PROTECTED BY GUARDRAIL, BRIDGE RAIL, AND/OR BARRIERS INSTALLED FOR OTHER PURPOSES FOR ROADWAYS WITH CURRENT ADT'S LESS THAN 1500 AND DESIGN SPEED OF LESS THAN 60 MPH. THIS DISTANCE SHALL BE INCREASED TO FORTY-FIVE (45) FEET FOR ROADWAYS WITH CURRENT ADT'S OF 1500 OR GREATER AND DESIGN SPEED OF 60 MPH OR GREATER OR ON THE OUTSIDE OF A HORIZONTAL CURVE. PRIVATELY OWNED VEHICLES SHALL NOT BE ALLOWED TO PARK WITHIN THIRTY (30) FEET OF AN OPEN TRAFFIC LANE AT ANY TIME UNLESS PROTECTED AS DESCRIBED ABOVE FOR ROADWAYS WITH CURRENT ADT'S LESS THAN 1500 AND DESIGN SPEED OF LESS THAN 60 MPH. THIS DISTANCE SHALL BE INCREASED TO FORTY-FIVE (45) FEET FOR ROADWAYS WITH CURRENT ADT'S OF 1500 OR GREATER AND DESIGN SPEED OF 60 MPH OR GREATER OR ON THE OUTSIDE OF A HORIZONTAL CURVE.. WHERE THERE IS INSUFFICIENT RIGHT-OF-WAY TO PROVIDE FOR THIS REQUIRED SETBACK, THE CONTRACTOR SHALL DETERMINE THE ALTERNATE LOCATIONS AND REQUEST THE ENGINEER'S APPROVAL TO USE THEM.

(2) ALL DETOUR AND CONSTRUCTION SIGNING SHALL BE IN STRICT ACCORDANCE WITH THE MANUAL ON UNIFORM TRAFFIC CONTROL DEVICES.

LIGHTING

(1) INSTALLATION AND MATERIALS SHALL COMPLY WITH SECTIONS 714 AND 917 OF THE TENNESSEE DEPARTMENT OF TRANSPORTATION STANDARD SPECIFICATIONS FOR ROAD AND BRIDGE CONSTRUCTION DATED MARCH 1, 2006 AND WITH THE LATEST REVISIONS TO THE NATIONAL ELECTRIC CODE, NFPA 70.

(2) BRACKET ARMS SHALL BE ROUND TAPERED TRUSS TYPE WITH STRAP MOUNTING AND LENGTHS AS SCHEDULED.

(3) BRACKET ARM UPSWEEP SHALL BE THE SAME FOR ALL LIGHT STANDARDS OF THE SAME TYPE.

EROSION PREVENTION AND SEDIMENT CONTROL

DISTURBED AREA

(1) AREAS TO BE UNDISTURBED SHALL BE CLEARLY MARKED IN THE FIELD BEFORE CONSTRUCTION ACTIVITIES BEGIN.

(2) PRE-CONSTRUCTION VEGETATIVE GROUND COVER SHALL NOT BE DESTROYED, REMOVED OR DISTURBED (I.E. CLEARING AND GRUBBING INITIATED) MORE THAN 15 CALENDAR DAYS PRIOR TO GRADING OR EARTH MOVING ACTIVITIES UNLESS THE AREA IS MULCHED, SEEDED WITH MULCH, OR OTHER TEMPORARY COVER IS INSTALLED.

(3) CLEARING, GRUBBING, AND OTHER DISTURBANCE TO RIPARIAN VEGETATION SHALL BE LIMITED TO THE MINIMUM NECESSARY FOR SLOPE CONSTRUCTION AND EQUIPMENT OPERATIONS. EXISTING VEGETATION SHOULD BE PRESERVED TO THE MAXIMUM EXTENT POSSIBLE. UNNECESSARY VEGETATION REMOVAL IS PROHIBITED.

(4) ALL DISTURBED AREAS SHALL BE PROPERLY STABILIZED AS SOON AS PRACTICABLE. PRIORITY SHALL BE GIVEN TO FINISHING OPERATIONS AND PERMANENT EPSC MEASURES OVER TEMPORARY EPSC MEASURES ON ALL PROJECTS.

(5) CONSTRUCTION SHALL BE SEQUENCED AND STAGED TO MINIMIZE THE EXPOSURE TIME OF GRADED OR DENUDED SOIL AREAS, PRESERVE TOPSOIL, AND MINIMIZE SOIL COMPACTION.

(6) NO MORE THAN 50 ACRES OF ACTIVE SOIL DISTURBANCE IS ALLOWED AT ANY TIME DURING THE CONSTRUCTION OF THE PROJECT. OFF-SITE BORROW OR WASTE AREAS ARE TO BE INCLUDED IN THE TOTAL DISTURBED AREA IF THE BORROW OR WASTE AREA IS EXCLUSIVE TO THE PROJECT PER TDOT'S WASTE AND BORROW MANUAL.

SEDIMENT CONTROL

(7) EPSC MEASURES SHALL BE INSTALLED AND FUNCTIONAL PRIOR TO ANY EARTH MOVING OPERATIONS, AND SHALL BE MAINTAINED THROUGHOUT THE CONSTRUCTION PERIOD.

(8) THE CONTRACTOR SHALL ESTABLISH AND MAINTAIN A PROACTIVE METHOD TO PREVENT THE OFF-SITE MIGRATION OR DEPOSIT OF SEDIMENT ON ROADWAYS USED BY THE GENERAL PUBLIC. IF SEDIMENT ESCAPES THE CONSTRUCTION SITE, OFF-SITE ACCUMULATIONS OF SEDIMENT THAT HAVE NOT REACHED A STREAM MUST BE REMOVED AT A FREQUENCY SUFFICIENT TO MINIMIZE OFF-SITE IMPACTS (E.G., FUGITIVE SEDIMENT THAT HAS ESCAPED THE CONSTRUCTION SITE AND HAS COLLECTED IN A STREET MUST BE REMOVED SO THAT IT IS NOT SUBSEQUENTLY WASHED INTO STORM SEWERS AND STREAMS BY THE NEXT RAIN AND/OR SO THAT IT DOES NOT POSE A SAFETY HAZARD TO USERS OF PUBLIC STREETS). ARRANGEMENTS CONCERNING REMOVAL OF SEDIMENT ON ADJOINING PROPERTY MUST BE SETTLED WITH THE ADJOINING PROPERTY OWNER BEFORE REMOVAL OF SEDIMENT.

(9) WATER PUMPED FROM WORK AREAS AND EXCAVATION MUST BE HELD IN SETTLING BASINS OR TREATED BY FILTRATION OR CHEMICAL TREATMENT PRIOR TO ITS DISCHARGE INTO SURFACE WATERS. ALL PHYSICAL AND/OR CHEMICAL TREATMENT WILL BE APPLIED IN ACCORDANCE WITH MANUFACTURER'S GUIDELINES AND FULLY DESCRIBED IN THE EPSC PLANS. WATER MUST BE HELD IN SETTLING BASINS UNTIL AT LEAST AS CLEAR AS THE RECEIVING WATERS. SETTLING BASINS SHALL NOT BE LOCATED CLOSER THAN 20 FEET FROM THE TOP BANK OF A STREAM. SETTLING BASINS AND SEDIMENT TRAPS SHALL BE PROPERLY DESIGNED ACCORDING TO THE SIZE OF THE DRAINAGE AREAS OR VOLUME OF WATER TO BE TREATED. TREATED WATER MUST BE DISCHARGED THROUGH A PIPE OR WELL- VEGETATED OR LINED CHANNEL, SO THAT THE DISCHARGE DOES NOT CAUSE EROSION OR SEDIMENT TRANSPORT. DISCHARGES FROM BASINS AND IMPOUNDMENTS SHALL UTILIZE OUTLET STRUCTURES THAT ONLY WITHDRAW WATER FROM NEAR THE SURFACE OF THE BASIN OR IMPOUNDMENT. DISCHARGES MUST NOT CAUSE AN OBJECTIONABLE COLOR CONTRAST WITH THE RECEIVING STREAM.

(10) CHECK DAMS SHALL BE USED WHERE RUNOFF IS CONCENTRATED. CLEAN ROCK, BRUSH, GABION, OR SANDBAG CHECK DAMS SHALL BE PROPERLY CONSTRUCTED TO REDUCE VELOCITY AND CONTROL EROSION.

(11) FOR AN OUTFALL IN A DRAINAGE AREA OF 10 ACRES OR MORE, A TEMPORARY (OR PERMANENT) SEDIMENT BASIN OR EQUIVALENT CONTROL MEASURES THAT PROVIDES STORAGE FOR A CALCULATED VOLUME OF RUNOFF FROM A MINIMUM 2-YEAR/ 24-HOUR STORM EVENT, SHALL BE PROVIDED UNTIL FINAL STABILIZATION OF THE SITE. THE ENVIRONMENTAL AND ROOADWAY DESIGN DIVISIONS MAY BE CONTACTED TO REVIEW AND CONCUR WITH ANY REVISION OF THE SWPPP BEFORE DISTURBANCE OF THE OUTFALL PROCEEDS.

(12) IF PERMANENT OR TEMPORARY VEGETATION IS TO BE USED AS AN EPSC MEASURE, THEN THE TIMING OF PLANTING OF VEGETATION SHALL BE SHOWN IN THE SWPPP. DELAYING PLANTING OF COVER VEGETATION UNTIL WINTER MONTHS OR DRY MONTHS SHOULD BE AVOIDED, IF POSSIBLE.

(13) OFFSITE VEHICLE TRACKING OF SEDIMENTS AND THE GENERATION OF DUST SHALL BE MINIMIZED. A STABILIZED CONSTRUCTION ACCESS (A POINT OF ENTRANCE/EXIT TO THE CONSTRUCTION PROJECT) SHALL BE PROVIDED, AS NEEDED, TO REDUCE THE TRACKING OF MUD AND DIRT ONTO PUBLIC ROADS BY CONSTRUCTION VEHICLES.

(14) TEMPORARY EPSC MEASURES MAY BE REMOVED AT THE BEGINNING OF THE WORKDAY, BUT MUST BE REPLACED AT THE END OF THE WORKDAY.

STREAM/WETLAND

(15) SOIL MATERIALS MUST BE PREVENTED FROM ENTERING WATERS OF THE STATE/U.S. EPSC MEASURES TO PROTECT WATER QUALITY MUST BE MAINTAINED THROUGHOUT THE CONSTRUCTION PERIOD. APPROPRIATE EPSC MEASURES MUST BE INSTALLED ALONG THE BASE OF ALL FILLS AND CUTS, ON THE DOWNHILL SIDE OF STOCKPILED SOIL, AND ALONG STREAM BANKS IN CLEARED AREAS TO PREVENT SEDIMENT MIGRATION INTO STREAMS IN ACCORDANCE WITH TDOT STANDARDS. THEY MUST BE INSTALLED ON THE CONTOUR, ENTRENCHED AND STAKED, AND EXTEND THE WIDTH OF THE AREA TO BE CLEARED.

(16) NEW CHANNEL CONSTRUCTION SHALL BE COMPLETED IN THE DRY AND STABILIZED FOR AT LEAST 72 HOURS PRIOR TO DIVERTING WATER FROM THE EXISTING AND/OR TEMPORARY CHANNEL.

(17) INSTREAM EPSC DEVICES REQUIRE THE ENVIRONMENTAL DIVISION'S PERMITS SECTION REVIEW AND MUST BE PROCESSED BY THE PERMITS SECTION TO OBTAIN TDEC, USACE, AND TVA PERMITS.

(18) THE OPERATION OF EQUIPMENT IN WATERS OF THE STATE/U.S., INCLUDING WETLANDS, SHALL BE ONLY AS SHOWN ON THE PROJECT PLANS AND/OR AS SO SPECIFIED IN THE ARAP/401, SECTION 404 PERMIT(S) AND/OR TVA26(A), IF APPLICABLE. ANY ADDITIONAL PERMITS REQUIRED BY THE CONTRACTOR'S METHOD OF OPERATION SHALL BE THE RESPONSIBILITY OF THE CONTRACTOR TO OBTAIN, AFTER RECEIVING THE APPROVAL OF TDOT ENVIRONMENTAL DIVISION.

(19) THE WIDTH OF THE FILL ASSOCIATED WITH TEMPORARY CROSSINGS SHALL BE LIMITED TO THE MINIMUM NECESSARY FOR THE ACTUAL CROSSING.

(20) STREAM BEDS SHALL NOT BE USED AS TRANSPORTATION ROUTES FOR CONSTRUCTION EQUIPMENT. TEMPORARY CROSSINGS MUST BE LIMITED TO ONE POINT PER STREAM AND EPSC MEASURES MUST BE USED WHERE THE STREAM BANKS ARE DISTURBED. WHERE THE STREAMBED IS NOT COMPOSED OF BEDROCK, A PAD OF CLEAN ROCK MUST BE USED AT THE CROSSING POINT AND CULVERTED TO PREVENT THE IMPOUNDMENT OF WATER FLOW. CLEAN ROCK IS ROCK OF VARIOUS TYPE AND SIZE, DEPENDING UPON APPLICATION, WHICH CONTAINS NO FINES, SOILS, OR OTHER WASTES OR CONTAMINANTS. OTHER MATERIALS USED FOR ALL TEMPORARY FILLS MUST BE COMPLETELY REMOVED IN THEIR ENTIRETY AFTER THE WORK IS COMPLETED AND THE AFFECTED AREAS RETURNED TO THEIR PREEXISTING ELEVATION. ALL TEMPORARY CROSSINGS MUST BE CONSTRUCTED IN ACCORDANCE WITH STD. DWG. EC-STR-25 UNLESS SPECIFICALLY ADDRESSED IN THE EPSC PLANS. ALTERNATIVELY, PLACING A TEMPORARY BRIDGE (BAILEY BRIDGE OR EQUIVALENT, TIMBERS, ETC.) FROM TOP OF BANK TO TOP OF BANK OR THE APPROPRIATE USE OF BARGES AT THE CROSSING TO AVOID DISTURBANCE OF THE STREAMBED IS AN ACCEPTABLE OPTION.

(21) HEAVY EQUIPMENT WORKING IN WETLANDS MUST BE PLACED ON MATS, OR OTHER MEASURES MUST BE TAKEN TO MINIMIZE SOIL DISTURBANCE UNLESS SPECIFICALLY ADDRESSED IN THE EPSC PLANS. ANY MATS AND OTHER MEASURES USED FOR HEAVY EQUIPMENT MUST BE REMOVED IN THEIR ENTIRETY AFTER THE WORK IS COMPLETED.

(22) WETLANDS SHALL NOT BE USED AS EQUIPMENT STORAGE, STAGING, OR TRANSPORTATION AREAS, UNLESS PROVIDED FOR IN THE PLANS.

SPECIES

(23) NO ACTIVITY MAY SUBSTANTIALLY DISRUPT THE MOVEMENT OF THOSE SPECIES OF AQUATIC LIFE INDIGENOUS TO THE WATER BODY, INCLUDING THOSE SPECIES THAT NORMALLY MIGRATE THROUGH THE AREA. THE SWPPP SHALL BE MODIFIED TO INCLUDE EPSC MEASURES TO PREVENT NEGATIVE IMPACTS TO LEGALLY PROTECTED STATE OR FEDERAL FAUNA OR FLORA OR AS INDICATED IN THE ECOLOGICAL STUDIES OR ON THE PERMIT(S).

INSPECTION, MAINTENANCE, REPAIR

(24) EPSC CONTROLS WILL BE MAINTAINED IN ACCORDANCE WITH TDOT STANDARD DRAWINGS AND GOOD ENGINEERING PRACTICES.

(25) INSPECTION, REPAIR, AND MAINTENANCE OF EPSC MEASURES/STRUCTURES IS TO BE PERFORMED ON A REGULAR BASIS. SEDIMENT SHALL BE REMOVED FROM SEDIMENT CONTROL STRUCTURES WHEN THE DESIGN CAPACITY HAS BEEN REDUCED BY FIFTY PERCENT (50%). DURING SEDIMENT REMOVAL, THE CONTRACTOR SHALL TAKE CARE TO ENSURE THAT STRUCTURAL COMPONENTS OF EPSC MEASURES ARE NOT DAMAGED AND THUS MADE INEFFECTIVE. IF DAMAGE DOES OCCUR, THE CONTRACTOR SHALL REPAIR THE STRUCTURES AT THE CONTRACTOR'S OWN EXPENSE.

(26) SEDIMENT REMOVED FROM SEDIMENT CONTROL STRUCTURES SHALL BE PLACED AND BE TREATED IN A MANNER SO THAT THE SEDIMENT IS CONTAINED WITHIN THE PROJECT LIMITS AND DOES NOT MIGRATE INTO WATERS OF THE STATE/U.S. COST FOR THIS TREATMENT IS TO BE INCLUDED IN PRICE BID FOR ITEM NO. 209-05 SEDIMENT REMOVAL, C.Y.

(27) THE CONTRACTOR SHALL INSTALL A RAIN GAUGE EVERY LINEAR MILE AT ALL SITES WHERE CLEARING, GRUBBING, EXCAVATION, GRADING CUTTING OR FILLING IS BEING ACTIVELY PERFORMED, OR EXPOSED SOIL HAS NOT YET BEEN PERMANENTLY STABILIZED. IF THE PROJECT LENGTH IS LESS THAN ONE LINEAR MILE, ONE RAIN GAUGE SHALL BE INSTALLED AT THE CENTER OF THE PROJECT OR AS INDICATED BY THE TDOT EPSC INSPECTOR. THE CONTRACTOR SHALL ENSURE THAT EACH GAUGE IS MAINTAINED IN GOOD WORKING CONDITION. TDOT AND/OR THE CONTRACTOR SHALL RECORD DAILY PRECIPITATION AND FORECASTED PERCENTAGE OF PRECIPITATION IN DETAILED RECORDS OF RAINFALL EVENTS INCLUDING DATES, AMOUNTS OF RAINFALL PER GAUGE, THE ESTIMATED DURATION (OR STARTING AND ENDING TIMES), AND FORECASTED PERCENTAGE OF PRECIPITATION FOR THE PROJECT. THIS INFORMATION SHALL BE PROVIDED TO THE ENGINEER ON A MONTHLY BASIS. THE COST FOR THE RAIN GAUGES IS TO BE INCLUDED IN THE UNIT BID PRICES FOR OTHER ITEMS. RAIN GAUGES SHALL BE AS SPECIFIED IN THE APPROVED TDOT RAINFALL MONITORING PLAN.

(28) INSPECTION OF EPSC MEASURES SHALL BE DONE AT LEAST TWICE PER CALENDAR WEEK AT LEAST 72 HOURS APART. A CALENDAR WEEK IS DEFINED AS SUNDAY THROUGH SATURDAY. QUALITY ASSURANCE/QUALITY CONTROL SITE ASSESSMENT OF EPSC SHALL BE PERFORMED PER THE TDOT ENVIRONMENTAL DIVISION'S COMPREHENSIVE INSPECTION OFFICE GUIDELINES.

(29) OUTFALL POINTS SHALL BE INSPECTED TO ASCERTAIN WHETHER EPSC MEASURES ARE EFFECTIVE IN PREVENTING SIGNIFICANT IMPACTS TO SURROUNDING WATERS. WHERE DISCHARGE LOCATIONS ARE INACCESSIBLE, NEARBY DOWNSTREAM LOCATIONS SHALL BE INSPECTED. LOCATIONS WHERE VEHICLES ENTER AND EXIT THE SITE SHALL BE INSPECTED FOR EVIDENCE OF OFF-SITE ROADWAY SEDIMENT TRACKING.

(30) UPON CONCLUSION OF THE INSPECTIONS, EPSC MEASURES FOUND TO BE INEFFECTIVE SHALL BE REPAIRED, REPLACED, OR MODIFIED BEFORE THE NEXT RAIN EVENT, IF POSSIBLE, BUT IN NO CASE MORE THAN 24 HOURS AFTER THE INSPECTION OR WHEN THE CONDITION IS IDENTIFIED. IF THE REPAIR, REPLACEMENT OR MODIFICATION IS NOT PRACTICAL WITHIN THE TIMEFRAME, WRITTEN DOCUMENTATION MUST BE PROVIDED IN THE FIELD BOOK AND AN ESTIMATED REPAIR, REPLACEMENT OR MODIFICATION SCHEDULE SHALL BE DOCUMENTED WITHIN 24 HOURS AFTER IDENTIFICATION.

UNOFFICIAL SET

NOT FOR BIDDING

SEALED BY

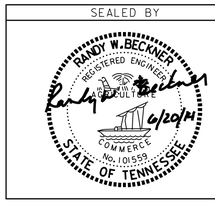

STATE OF TENNESSEE
DEPARTMENT OF TRANSPORTATION

GENERAL NOTES

6/19/2014 4:06:17 PM
H:\3131G - Sullivan Co Eastman SIA\002_SecondSheets.sht

TYPE	YEAR	PROJECT NO.	SHEET NO.
CONST.	2014	82956-3288-04 STP-126(19)	2G

(1) THE TDOT PROJECT SUPERVISOR (OR THEIR DESIGNEE) AND THE CONTRACTOR'S SITE SUPERINTENDENT ARE RESPONSIBLE FOR INSPECTIONS. MAINTENANCE AND REPAIR ACTIVITIES ARE THE RESPONSIBILITY OF THE CONTRACTOR. THE TDOT PROJECT SUPERVISOR OR THEIR DESIGNEE WILL COMPLETE THE INSPECTION REPORTS AND DISTRIBUTE COPIES PER THE CONTRACT.

MATERIALS

(2) WASTE AND BORROW AREAS SHALL BE LOCATED IN NON-WETLAND AREAS AND ABOVE THE 100-YEAR, FEDERAL EMERGENCY MANAGEMENT AGENCY FLOODPLAIN. BORROW AND WASTE DISPOSAL AREAS SHALL NOT AFFECT ANY WATERS OF THE STATE/U.S. UNLESS THESE AREAS ARE SPECIFICALLY COVERED BY AN ARAP, 404, OR NPDES PERMIT, OBTAINED SOLELY BY THE CONTRACTOR.

SWPPP, PERMITS, PLANS, RECORDS

(3) THE CONTRACTOR SHALL BE SOLELY RESPONSIBLE FOR AND OBTAIN ANY NECESSARY ENVIRONMENTAL PERMITS OR APPROVALS, INCLUDING BUT NOT LIMITED TO TDEC ARAP/401, USACE SECTION 404, TVA SECTION 26A, AND TDEC NPDES PERMITS, FROM FEDERAL, STATE AND/OR LOCAL AGENCIES REGARDING THE OPERATION OF ANY PROJECT-DEDICATED ASPHALT AND/OR CONCRETE PLANTS.

(4) ANY DISAGREEMENT BETWEEN THE PROJECT PLANS, THE PROJECT AS CONSTRUCTED, AND THE PERMIT(S) ISSUED FOR THE PROJECT, SHALL BE BROUGHT TO THE ATTENTION OF THE TDOT PROJECT ENGINEER. THE ENVIRONMENTAL DIVISION, ROOADWAY DESIGN DIVISION, AND HEADQUARTERS CONSTRUCTION OFFICE SHALL BE CONTACTED IN THESE INSTANCES AND DECIDE WHICH HAS PRECEDENCE AND WHETHER PERMIT OR PLANS REVISIONS ARE NEEDED. IN GENERAL, PERMIT CONDITIONS WILL PREVAIL.

(5) THE FOLLOWING INFORMATION SHALL BE MAINTAINED ON OR NEAR THE SITE: DATES THAT MAJOR GRADING ACTIVITIES OCCUR, DATES WHERE CONSTRUCTION ACTIVITIES TEMPORARILY OR PERMANENTLY CEASE ON A PORTION OF THE SITE, DATES WHEN STABILIZATION MEASURES ARE INITIATED, EPSC INSPECTION RECORDS, QUALITY ASSURANCE SITE ASSESSMENT RECORDS, PRECIPITATION RECORDS, SWPPP, PROJECT ENVIRONMENTAL PERMITS, AND A COPY OF THE PROJECT EPSC INSPECTOR'S TDEC LEVEL 1 CERTIFICATION.

(6) ALL WATER QUALITY AND STORM WATER PERMITS, INCLUDING A COPY OF THE NOC WITH NPDES PERMIT TRACKING NUMBER AND THE LOCATION OF THE SWPPP, SHALL BE POSTED NEAR THE MAIN ENTRANCE OF THE CONSTRUCTION SITE ACCESSIBLE TO THE PUBLIC. THE NAME, COMPANY NAME, EMAIL ADDRESS, TELEPHONE NUMBER AND ADDRESS OF THE PROJECT SITE OWNER, OPERATOR, OR A LOCAL CONTACT PERSON WITH A BREIF DESCRIPTION OF THE PROJECT SHALL ALSO BE POSTED. IF POSTING THIS INFORMATION NEAR A MAIN ENTRANCE IS INFEASIBLE, THE INFORMATION SHALL BE PLACED IN A PUBLICLY ACCESSIBLE LOCATION NEAR WHERE THE CONSTRUCTION IS ACTIVELY UNDERWAY AND MOVED AS NECESSARY. THIS LOCATION SHALL BE POSTED AT THE CONSTRUCTION SITE. ALL POSTINGS SHALL BE MAINTAINED IN LEGIBLE CONDITION.

(7) IF A CHANGE IN PROJECT SCOPE OCCURS DURING CONSTRUCTION, INCLUDING VALUE ENGINEERING, THE ENVIRONMENTAL DIVISION SHALL BE CONTACTED TO DETERMINE WHETHER PERMIT REVISIONS OR MODIFICATIONS OF THE SWPPP ARE NEEDED. THE ROOADWAY DESIGN DIVISION SHALL BE CONTACTED TO DETERMINE IF ANY PLAN REVISIONS ARE NEEDED.

(8) THE SWPPP SHALL BE UPDATED BY CONSTRUCTION WHENEVER EPSC INSPECTIONS INDICATE, OR WHERE STATE OR FEDERAL OFFICIALS DETERMINE EPSC MEASURES ARE PROVING INEFFECTIVE IN ELIMINATING OR SIGNIFICANTLY MINIMIZING POLLUTANT SOURCES OR ARE OTHERWISE NOT ACHIEVING THE GENERAL OBJECTIVES OF CONTROLLING POLLUTANTS IN STORM WATER DISCHARGES ASSOCIATED WITH THE CONSTRUCTION ACTIVITY. THE ENVIRONMENTAL DIVISION SHALL BE CONTACTED WHEN MAJOR DESIGN REVISIONS ARE REQUESTED BY CONSTRUCTION. THE ENVIRONMENTAL DIVISION MAY BE CONTACTED FOR GUIDANCE ON SPECIFIC SWPPP NEEDS. A COPY OF ANY CORRESPONDENCE REGARDING THE EFFECTIVENESS OF THE SWPPP OR EPSC CONTROLS SHALL BE RETAINED IN THE SWPPP.

(9) THE SWPPP SHALL BE UPDATED BY CONSTRUCTION WHENEVER A CHANGE IN CHEMICAL TREATMENT METHODS IS MADE INCLUDING USE OF A DIFFERENT CHEMICAL, DIFFERENT DOSAGE OR APPLICATION RATE, OR A DIFFERENT AREA OF APPLICATION.

(10) IF A TMDL IS DEVELOPED FOR THE RECEIVING WATERS FOR A POLLUTANT OF CONCERN (SILTATION AND/OR HABITAT ALTERATION) THE SWPPP SHALL BE MODIFIED OR UPDATED.

(11) PROJECT INSPECTORS AND SUPERVISORS (INCLUDING TDOT STAFF, CONSULTANTS AND CONTRACTOR STAFF) RESPONSIBLE FOR THE IMPLEMENTATION AND MAINTENANCE OF EPSC PLANS SHALL SUCCESSFULLY COMPLETE THE TDEC "LEVEL 1 - FUNDAMENTALS OF EROSION PREVENTION AND SEDIMENT CONTROL FOR CONSTRUCTION SITES" COURSE AND ANY REFRESHER COURSES AS REQUIRED TO MAINTAIN CERTIFICATION. A COPY OF CERTIFICATION RECORDS FOR THE COURSES SHALL BE KEPT ON SITE AND AVAILABLE UPON REQUEST.

LITTER, DEBRIS, WASTE, PETROLEUM

(12) THE CONTRACTOR SHALL ESTABLISH AND MAINTAIN A PROACTIVE METHOD TO PREVENT LITTER, CONSTRUCTION DEBRIS, AND CONSTRUCTION WASTES FROM ENTERING WATERS OF THE STATE/U.S. THESE MATERIALS WILL BE PICKED UP AND REMOVED FROM STORMWATER EXPOSURE PRIOR TO ANTICIPATED STORM EVENTS. AFTER USE, MATERIALS USED FOR EPSC WILL BE REMOVED FROM THE SITE.

(13) THE CONTRACTOR SHALL TAKE APPROPRIATE STEPS TO ENSURE THAT PETROLEUM PRODUCTS OR OTHER CHEMICAL POLLUTANTS ARE PREVENTED FROM ENTERING WATERS OF THE STATE/U.S. ALL EQUIPMENT REFUELING, SERVICING, AND STAGING AREAS SHALL COMPLY WITH ALL LOCAL, STATE, AND FEDERAL LAWS, RULES, REGULATIONS, AND ORDINANCES, INCLUDING THOSE OF THE NATIONAL FIRE PROTECTION ASSOCIATION (NFPA). APPROPRIATE CONTAINMENT MEASURES FOR THESE AREAS SHALL BE USED. ALL SPILLS MUST BE REPORTED TO THE APPROPRIATE AGENCY, AND MEASURES SHALL BE TAKEN IMMEDIATELY TO PREVENT THE POLLUTION OF WATERS OF THE STATE/U.S., INCLUDING GROUNDWATER, SHOULD A SPILL OCCUR.

SPECIAL NOTES

GRADING

(1) THE GRADING TABULATIONS AND RESULTING EARTHWORK ASSOCIATED BID QUANTITIES WERE PREPARED UTILIZING AVAILABLE GEOTECHNICAL INFORMATION AND/OR REPORTS PREPARED FOR THIS PROJECT. THIS INFORMATION IS PROVIDED FOR GENERAL INFORMATION AND ESTIMATION GUIDANCE ONLY.

(2) BORING DEPICTIONS SHOWN ON THE FOUNDATION DATA SHEETS, SOILS SHEETS, PLANS, AND CROSS-SECTIONS INDICATE SOIL AND ROCK CONDITIONS AT THE SPECIFIC BORING LOCATIONS. ANY SOIL PROFILE AND/OR ROCK LINE IS INTERPRETIVE BASED ON THE JUDGMENT OF THE GEOTECHNICAL ENGINEER/GEOLOGIST. THE TRANSITION BETWEEN BORINGS AND LAYERS MAY VARY SIGNIFICANTLY DEPENDING ON THE GEOLOGIC FORMATIONS ENCOUNTERED.

(3) THE CONTRACTOR SHALL UTILIZE ALL INFORMATION PROVIDED IN THE PLANS, CROSS-SECTIONS AND CONTRACT DOCUMENTS INCLUDING ANY SPECIAL PROVISIONS AS WELL AS UTILIZING HIS PAST EXPERIENCE WITH PROJECTS OF SIMILAR NATURE, SCOPE AND LOCATION IN PREPARATION OF HIS BID FOR EARTHWORK ITEMS. IT IS THE CONTRACTOR'S RESPONSIBILITY TO DETERMINE AND PROVIDE EQUIPMENT AND MEANS NECESSARY TO CONDUCT THE EXCAVATION ACTIVITIES IN ACCORDANCE WITH PLANS AND SPECIFICATIONS.

(4) EARTHWORK IS PAID FOR UNDER ITEM 203-01, ROAD AND DRAINAGE EXCAVATION (UNCLASSIFIED). NO ADDITIONAL PAYMENT WILL BE MADE FOR EARTHWORK QUANTITIES BASED SOLELY ON A CLAIM THAT THE QUANTITIES SHOWN IN THE GRADING TABULATION OR ELSEWHERE IN THE PLANS ARE INACCURATE WITH RESPECT TO THE TYPE OF MATERIALS ENCOUNTERED DURING CONSTRUCTION EXCEPT AS PROVIDED FOR BY SECTION 104.02 IN THE CURRENT EDITION OF THE STANDARD SPECIFICATIONS FOR ROAD AND BRIDGE CONSTRUCTION OR AS AMENDED IN SUPPLEMENTAL SPECIFICATIONS.

CONSTRUCTION WORK ZONE & TRAFFIC CONTROL

(1) ANY WORK REQUIRING THE CLOSURE OF S.R. 126 SHALL BE EITHER ON WEEKENDS OR AT NIGHT BETWEEN THE HOURS OF 7:00 PM AND 6:00 AM, AS DIRECTED BY THE TDOT OPERATIONS DISTRICT ENGINEER.

(2) ANY ROAD CLOSURE IS SUBJECT TO APPROVAL BY TDOT AND THE CITY OF KINGSPORT. THE CONTRACTOR SHALL OBTAIN APPROVAL AND PROVIDE NOTICE AT LEAST 14 DAYS PRIOR TO CLOSURE.

(3) S.R. 126 SHALL NOT BE CLOSED ON WEEKENDS (FRIDAY THROUGH SUNDAY) WHEN THERE IS A NASCAR RACE SCHEDULED AT BRISTOL MOTOR SPEEDWAY.

RETAINING WALLS

(1) VALUE ENGINEERING CHANGE PROPOSALS WILL NOT BE ACCEPTED FOR RETAINING WALLS (ITEM NO. 604-07.30).

(2) ALL COST OF BUILDING, INSTALLING, AND BACKFILLING THE RETAINING WALL SHALL BE INCLUDED IN THE COST OF THE RETAINING WALL.

SIGNALIZATION

(1) THE DESIGN OF TRAFFIC SIGNAL SUPPORT POLES, MAST ARMS, STRAIN POLES, ETC. SHALL BE IN CONFORMANCE WITH THE AASHTO STANDARD SPECIFICATIONS FOR STRUCTURAL SUPPORTS FOR HIGHWAY SIGNS, LUMINAIRES AND TRAFFIC SIGNALS, CURRENT EDITION. OVERHEAD CANTILEVERED TRAFFIC SIGNAL STRUCTURES SHALL BE DESIGNED FOR FATIGUE CATEGORY 1.

(2) TRAFFIC SIGNAL HEADS SHALL BE INSTALLED SO AS TO PROVIDE A MINIMUM OF 17'-6" OF VERTICAL CLEARANCE ABOVE THE ROADWAY.

(3) ALL CIRCULAR AND ARROW INDICATIONS WITHIN ALL VEHICULAR SIGNAL HEADS PROPOSED FOR THIS PROJECT SHALL CONSIST OF AN LED (LIGHT EMITTING DIODE) SIGNAL MODULE UNLESS OTHERWISE NOTED. ALL SIGNAL HEADS WITH LED LENSES SHALL INCLUDE SWIVEL BALANCE ADJUSTERS TO MAINTAIN THE PROPER VISIBILITY. COSTS OF ADJUSTERS TO BE INCLUDED IN THE COSTS OF SIGNAL HEADS.

(4) ALL LED'S SHALL MEET THE MINIMUM STANDARDS AS OUTLINED IN CHAPTER 2A (INCLUDING PROVISIONS OF TECHNICAL NOTES) IN THE APPENDIX OF THE PUBLICATION EQUIPMENT AND MATERIAL STANDARDS OF THE INSTITUTE OF TRANSPORTATION ENGINEERS PUBLISHED BY ITE, NOVEMBER 1997.

(5) CIRCULAR INDICATIONS SHALL MEET "ITE VTCSH-LED CIRCULAR SIGNAL SUPPLEMENT" FOR EXPANDED/EXTENDED VIEW. ARROW INDICATIONS SHALL MEET "ITE VTCSH-3 LED ARROW SPECIFICATION" FOR EXPANDED/EXTENDED VIEW. PEDESTRIAN INDICATIONS SHALL MEET "ITE PTCSI PART 2."

(6) COMPATIBILTY WITH CONFLICT MONITORS AND LOAD SWITCHES SHALL BE TESTED AND CONFIRMED.

(7) CONTRACTOR SHALL PROVIDE A FIVE-YEAR WARRANTY FOR LED SIGNAL MODULES. ALL OTHER SIGNAL EQUIPMENT SHALL HAVE A ONE-YEAR WARRANTY.

(8) ALL SIGNAL HEADS SHALL HAVE LOUVERED BACKPLATES AND TUNNEL VISORS.

(9) THE CONTRACTOR HAS THE RESPONSIBILITY OF INSTALLING TRAFFIC CONTROL DEVICES IN ACCORDANCE WITH THE CURRENT EDITION OF THE *MANUAL ON UNIFORM TRAFFIC CONTROL DEVICES*.

(10) VIDEO DETECTION CAMERAS SHALL BE MOUNTED ON 6' VERTICAL EXTENSIONS, ATTACHED TO THE MAST ARM PER T-SG-3A.

(11) ALL POLES, ARMS, CABINETS, AND EXPOSED HARDWARE SHALL BE GALVANIZED AND COATED WITH BLACK POWDER COAT PAINT.

(12) THE VIDEO DETECTION SYSTEM SHALL BE REMOTELY ACCESSIBLE FOR VIEWING AND PROGRAMMING VIA AN ETHERNET CONNECTION.

EROSION PREVENTION AND SEDIMENT CONTROL

NPDES

(1) REFER TO THE EROSION PREVENTION AND SEDIMENT CONTROL PLAN, SHEET 8, FOR NOTES REGARDING SEASONAL WORK LIMITATION OR LIMITATION ON THE TOTAL AREA OF EXPOSED SOIL.

SCOPE OF WORK

(1) THIS PROJECT INCLUDES THE GRADING, DRAINAGE, BASE, AND PAVEMENT FOR S.R. 126 AND ALL SIDE ROADS TO LINES AND GRADES AS INDICATED ON THE TYPICAL CROSS-SECTIONS AND PLAN AND PROFILE SHEETS OR AS DIRECTED BY THE TDOT SUPERVISOR. OTHER WORK INCLUDES CONSTRUCTION OF A PEDESTRIAN BRIDGE OVER S.R. 126 AND CONSTRUCTION OF A BRIDGE OVER MADD BRANCH FOR SULLIVAN STREET EXTENSION. UTILITY RELOCATION WORK IS ALSO INCLUDED IN THE CONTRACT. CONSTRUCTION OF ALL CURBS, SIDEWALK, GUARDRAIL, SIGNALIZATION, EPSC DEVICES, PAVEMENT MARKINGS, SIGNS, AND OTHER APPURTENANCES SHALL BE AS INDICATED ON THE PLANS OR AS DIRECTED BY THE TDOT SUPERVISOR.

UNOFFICIAL SET

NOT FOR BIDDING

SEALED BY

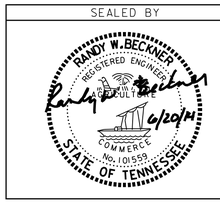

STATE OF TENNESSEE
DEPARTMENT OF TRANSPORTATION

GENERAL NOTES AND SPECIAL NOTES

6/23/2014 4:07:36 PM
H:\3131G - Sullivan Co Eastman SIA\002_SecondSheets.sht

TYPE	YEAR	PROJECT NO.	SHEET NO.
CONST.	2014	82956-3288-04 STP-126(19)	2H

ESTIMATED GRADING QUANTITIES

LOCATION	ROAD & DRAINAGE EXC. (UNCL.) C.Y.	BORROW EXCAVATION UNCL. - C.Y.	BORROW EXCAVATION S. ROCK - C.Y.	EXCESS EXC. WASTE C.Y.	EMB. C.Y.
S.R. 126 PROJECT					
S.R. 126	400				219
WILCOX ENTRANCE	401				1
SIGNAL POLES	47				0
PED. BRIDGE	22				0
EPSC	5				0
SUBTOTALS:	**875**			**601**	**219**
SIA PROJECT					
LINCOLN ST.	476				78
SULLIVAN ST.	133				0
SULLIVAN ST. EXT.	0				728
SIGNAL POLES	16				0
MADD BR. BRIDGE	593				0
SUBTOTALS:	**1218**			**211**	**806**
TOTALS	**2093**	**0**	**0**	**812**	**1025**

SHRINK/SWELL: 25%

EARTHWORK BALANCE COMPUTATIONS (C.Y.):

ROAD & DRAINAGE EXCAVATION AVAILABLE FOR BALANCE:	2,093
ADJUSTED EXCAVATION AVAILABLE:	1,674
EMBANKMENT REQUIRED:	-1,025
UNADJUSTED BALANCE:	649
TOTAL EXCESS MATERIAL:	812

BASE, PAVEMENT, & CURB QUANTITIES

LOCATION	PAY ITEMS 303-01 (TON) (CODE 7)	307-01.08 (TON) (CODE 3A)	307-02.01 (TON) (CODE 4)	307-02.02 (TON) (CODE 5)	307-02.03 (TON) (CODE 5)	307-02.08 (TON) (CODE 3)	402-01 (TON) (CODE 6)	403-01 (TON) (CODE 2)	411-01.10 (TON) (CODE 1A)	411-02.10 (TON) (CODE 1)	415-01.02 (S.Y.)	702-01 (C.Y.)	702-03 (C.Y.)
S.R. 126 PROJECT													
S.R. 126, EXIST. LANES								6.1		940	14195		44
S.R. 126, WIDENING	206		63	1.6	48	41	0.6	0.2		24			23
WILCOX ENTRANCE	192	53					0.5	0.1	23				6
SUBTOTALS:	398	53	63	1.6	48	41	1.1	6.5	23	965	14195	0.0	73
SIA PROJECT													
LINCOLN ST.								1.4		212	3206		
SULLIVAN ST. EXT.	357	98					1.0	0.2	42				14
SULLIVAN ST.	75	21					0.2	0.0	9			3.7	
SUBTOTALS:	432	119	0	0.0	0	0	1.2	1.6	51	212	3206	3.7	14
TOTALS	**830**	**172**	**63**	**1.6**	**48**	**41**	**2.2**	**8.1**	**73**	**1177**	**17401**	**3.7**	**87**

PROPOSED GUARDRAIL

SHEET NO.	LOCATION	SIDE LT	SIDE RT	STATION FROM	STATION TO	GUARDRAIL BRIDGE ENDS 705-11.01 (L.F.)	GUARDRAIL SINGLE TYPE 2 705-11.03 (L.F.)	TERMINAL ANCHORS TYPE 12 705-04.02 (EACH)	TERMINAL ANCHORS TYPE 13 705-04.03 (EACH)	TERMINAL ANCHORS TYPE 21 705-11.13 (EACH)	TERMINAL ANCHORS TYPE IN-LINE 705-04.05 (EACH)	TERMINAL ANCHORS TYPE 38 705-04.07 (EACH)	REMARKS
5B	ECU ENTRANCE	X		N/A	N/A		21						TIE TO PARAPET (BOTH ENDS) & SHOP-CURVE (RADIUS = 15')
5B	ECU ENTRANCE		X	N/A	N/A		18						
5B	SULLIVAN ST. EXT.	X		56+59	57+24	26.9	12.5			1			
5B	SULLIVAN ST. EXT.		X	56+14	56+78	26.9	12.5			1			
TOTALS						**53.8**	**64**	**0**	**0**	**2**	**0**	**0**	

UNOFFICIAL SET

NOT FOR BIDDING

SEALED BY

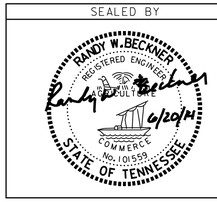

STATE OF TENNESSEE
DEPARTMENT OF TRANSPORTATION

TABULATED QUANTITIES

6/19/2014 4:07:54 PM
H:\3131G - Sullivan Co Eastman SIA\002_SecondSheets.sht

TYPE	YEAR	PROJECT NO.	SHEET NO.
CONST.	2014	82956-3288-04 STP-126(19)	21

CATCH BASINS AND MANHOLES

SHEET NO.	LOCATION	STATION	OFFSET (FT.)	DRAINAGE CODE	GRATE/TOP ELEV.	STRUCTURE TYPE	INSIDE DIMENSIONS (IN.)	DEPTH (FT.)	STANDARD DRAWING	PAY ITEMS						
										TYPE 3 MH 611-01.03 8' - 12'	TYPE 12 611-12.01 0' - 4'	TYPE 12 611-12.02 4' - 8'	TYPE 12 611-12.03 8' - 12'	TYPE 14 611-14.02 4' - 8'	EPSC FILTER ASSEMBLY 6	EPSC FILTER ASSEMBLY 7
4B	SR126	124+66.50	73.5	WQ-100	*	*	*	*	N/A							
4B	SR126	124+65.00	43	CB-101	1214.07	#12	36" X 48"	6.45	D-CB-12P			1			1	
4B	SR126	124+98.00	43.24	CB-102	1213.87	#14	96" DIA.	6.37	D-CB-14RB					1		1
4B	ENTRANCE	60+54.00	20.78	CB-103	1213.84	#12	60" DIA.	6.41	D-CB-12RB			1			1	
4B	ENTRANCE	60+54.00	-26.95	CB-104	1213.74	#12	60" DIA.	6.48	D-CB-12RB			1			1	
4B	ENTRANCE	60+44.00	-31.63	CB-105	1213.70	#14	96" DIA.	6.49	D-CB-14RB					1		1
4B	SR126	125+95.00	31.5	CB-106	1214.28	#12	60" DIA.	7.19	D-CB-12RB			1			1	
4B	SR126	126+75.00	31.5	CB-107	1214.63	#12	36" X 48"	7.86	D-CB-12P			1			1	
4B	SR126	127+55.00	31.5	CB-108	1215.03	#12	36" X 48"	8.57	D-CB-12P				1		1	
4B	SR126	128+50.00	31.5	CB-109	1215.16	#12	36" X 48"	9.07	D-CB-12P				1		1	
4B	SR126	130+55.00	31.5	CB-110	1215.89	#12	36" X 48"	10.60	D-CB-12P				1		1	
4B	SR126	130+58.00	47	MH-111	1217.10	MH	60" DIA.	11.89	D-MH-2	1						
5B	SR126	133+85.00	47	MH-112	1215.10	MH	60" DIA.	11.20	D-MH-2	1						
5B	SR126	136+70.00	48	MH-113	1212.90	MH	60" DIA.	10.14	D-MH-2	1						
5B	LINCOLN	25+78.00	31.31	CB-115	1211.85	#12	36" X 48"	5.74	D-CB-12P			1			1	
TOTALS										3	0	6	3	2	9	2

* STRUCTURE TO BE PROVIDED AND INSTALLED BY OTHERS.

STORM DRAINAGE PIPES

SHEET NO.	FROM CODE	FROM OUTLET ELEV.	TO CODE	TO INLET ELEV.	% GRADE	REINFORCED CONC. PIPE - CLASS III SIZE & LENGTH (L.F.) 18"	24"	30"	36"	48"
4B	WQ-100	1207.75	CB-101	1207.62	0.5	30				
4B	CB-101	1207.62	CB-102	1207.50	0.4	31				
4B	CB-102	1207.50	CB-103	1207.43	0.4		17			
4B	CB-103	1207.43	CB-104	1207.26	0.4		43			
4B	CB-104	1207.26	CB-105	1207.21	0.4		13			
4B	CB-105	1207.21	CB-106	1207.09	0.4		29			
4B	CB-106	1207.09	CB-107	1206.77	0.4		80			
4B	CB-107	1206.77	CB-108	1206.46	0.4		76			
4B	CB-108	1206.46	CB-109	1206.09	0.4		93			
4B	CB-109	1206.09	CB-110	1205.29	0.4		201			
4B	CB-110	1205.29	MH-111	1205.21	0.4		20			
5B	MH-111	1205.21	MH-112	1203.90	0.4		327			
5B	MH-112	1203.90	MH-113	1202.76	0.4		285			
5B	MH-113	1202.76	EW-114	1202.60	0.4		40			
5B	CB-115	1206.11	EW-116	1206.00	0.4	28				
TOTALS						89	1225	0	0	0

STORM DRAINAGE ENDWALLS

SHEET NO.	LOCATION	STATION	OFFSET (FT.)	DRAINAGE CODE	STRUCTURE TYPE	STANDARD DRAWING	CLASS A CONC. 611-07.01 (C.Y.)	REINF. STEEL 611-07.02 (LB.)	STRUC. STEEL 611-07.03 (LB.)
5B	SR126	136+81.59	84.98	EW-114	EW (24")	D-PE-4	1.86	68	
5B	LINCOLN	25+90.79	53.22	EW-116	EW (18")	D-PE-4	1.16	40	
TOTALS							3.02	108	0

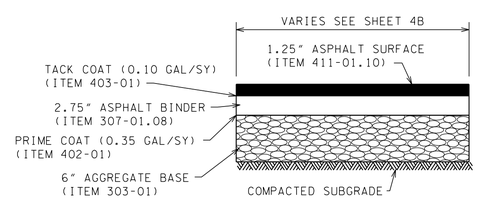

ASPHALT SIDEWALK DETAIL

SEE SHEET 4B FOR LOCATION

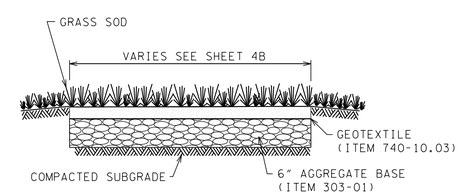

REINFORCED TURF DETAIL

SEE SHEET 4B FOR LOCATION

UNOFFICIAL SET

NOT FOR BIDDING

SEALED BY

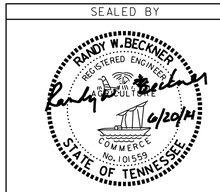

STATE OF TENNESSEE
DEPARTMENT OF TRANSPORTATION

TABULATED QUANTITIES & DETAILS

6/19/2014 4:08:20 PM
H:\3131G - Sullivan Co Eastman S1A\002_SecondSheets.sht

TYPE	YEAR	PROJECT NO.	SHEET NO.
R.O.W.	2014	82956-2288-04 82085-2236-04	3
CONST.	2014	82956-3288-04 STP-126(19)	3

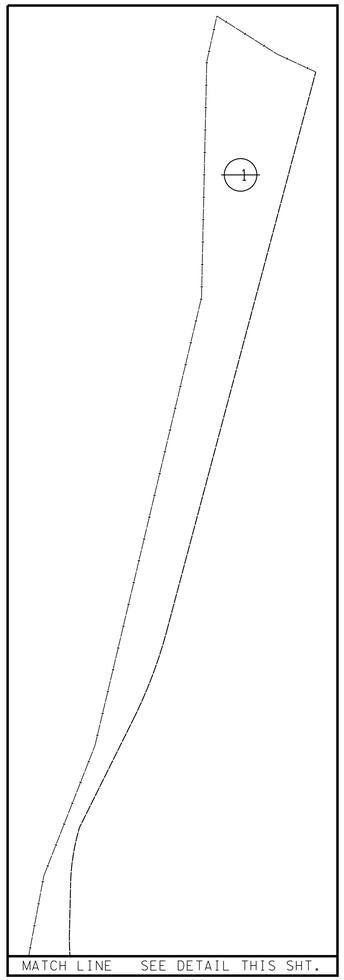

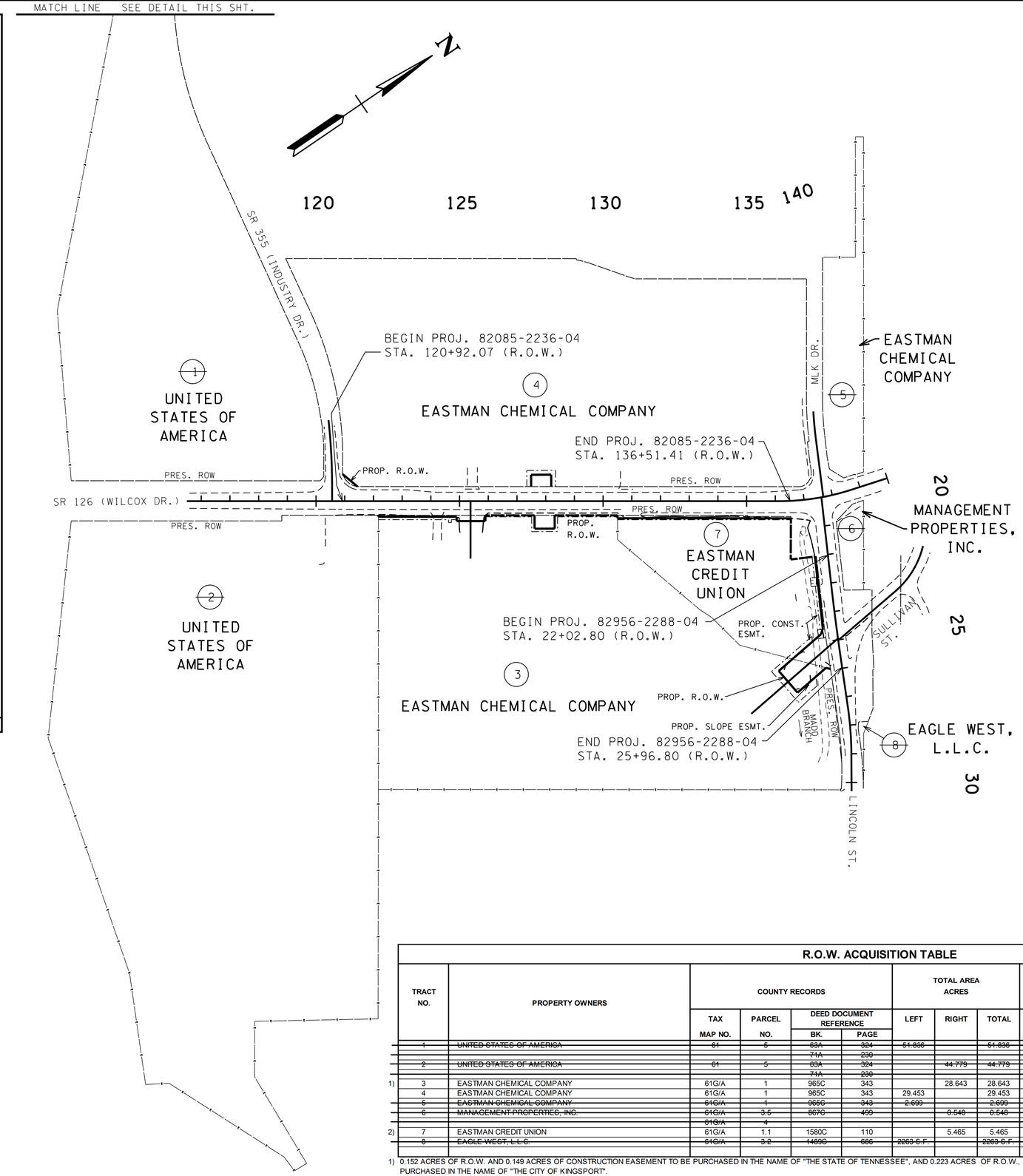

RIGHT - OF - WAY NOTES

(1) IT IS INTENDED THAT ALL BUILDINGS AND/OR PORTIONS OF BUILDINGS THAT ARE WITHIN THE PROPOSED RIGHT-OF-WAY AND/OR EASEMENT LINES FOR THE PROJECT BE REMOVED THERE FROM IN THE PROCESS OF RIGHT-OF-WAY ACQUISITION. IF ANY SUCH BUILDINGS OR IMPROVEMENTS ARE NOT REMOVED IN THE COURSE OF RIGHT-OF-WAY ACQUISITION, THE CIVIL ENGINEERING MANAGER 2, DESIGN DIVISION AND THE CIVIL ENGINEERING MANAGER 1, REGIONAL DESIGN OFFICE, ARE TO BE NOTIFIED IN SUFFICIENT TIME TO PERMIT HAVING SUCH REMOVALS DESIGNATED AS A PART OF THE CONSTRUCTION CONTRACT.

(2) ALL RAMPS MUST CONFORM TO THE DEPARTMENT'S "POLICY ON FINANCING CONSTRUCTION OF PUBLIC ROAD INTERSECTIONS AND DRIVEWAYS ON HIGHWAY RESURFACING, RECONSTRUCTION AND CONSTRUCTION PROJECTS ON NEW LOCATIONS", THE MANUAL ON RULES AND REGULATIONS FOR CONSTRUCTING DRIVEWAYS ON STATE HIGHWAY RIGHT-OF-WAY, STANDARD DRAWING RP-R-1, AND OTHER ACCEPTED DESIGN AND SAFETY STANDARDS.

(3) EXISTING PAVED DRIVEWAY PER TRACT REMAINDER WILL BE REPLACED IN KIND TO A TOUCHDOWN POINT.

(4) WHERE THE EXISTING DRIVEWAY IS UNPAVED AND THE PROPOSED DRIVEWAY EXCEEDS 7 PERCENT IN GRADE, EACH DRIVEWAY WILL BE PAVED TO A TOUCHDOWN POINT OR UNTIL THE GRADE IS LESS THAN 7 PERCENT.

(5) WHERE THE EXISTING DRIVEWAY IS UNPAVED AND THE PROPOSED DRIVEWAY IS LESS THAN 7 PERCENT IN GRADE, EACH DRIVEWAY WILL BE PAVED A SHOULDER WIDTH FROM THE EDGE OF PAVEMENT AND THE REMAINDER OF THAT DRIVEWAY REPLACED IN KIND TO A TOUCHDOWN POINT.

(6) ANY NECESSARY PAVING OF DRIVEWAYS WILL BE DONE DURING PAVING OPERATIONS ON THE MAIN ROADWAY.

(7) NEW DRIVEWAYS PROVIDED IN THE PLANS WILL BE PAVED BASED ON THE 7 PERCENT CRITERIA. THOSE 7 PERCENT OR STEEPER IN GRADE WILL BE PAVED AND THOSE FLATTER THAN 7 PERCENT WILL BE COVERED WITH BASE STONE.

(8) ON PROJECTS WITHOUT CURB AND GUTTER THAT ARE ON STATE ROUTES, IT WILL BE THE RESPONSIBILITY OF THE OWNER TO SECURE A PERMIT AND TO CONSTRUCT ADDITIONAL DRIVEWAYS AND FIELD ENTRANCES OTHER THAN THOSE PROVIDED IN THE PLANS.

(9) ON PROJECTS WITH CURB AND GUTTER THAT ARE ON STATE ROUTES, IT WILL BE THE RESPONSIBILITY OF THE OWNER TO SECURE A PERMIT. AFTER THE PERMIT HAS BEEN GRANTED, THE DEPARTMENT WILL CONSTRUCT THE DRIVEWAY OR FIELD ENTRANCE THROUGH THE CURB AND SIDEWALK, PROVIDED THE CURB AND SIDEWALK HAVE NOT BEEN CONSTRUCTED. IT WILL BE THE RESPONSIBILITY OF THE PROPERTY OWNER TO CONSTRUCT THE DRIVEWAY OR FIELD ENTRANCE FROM BACK OF SIDEWALK TO TOUCHDOWN POINT FOR ANY ADDITIONAL DRIVEWAYS OR FIELD ENTRANCES OTHER THAN THOSE PROVIDED IN THE PLANS.

UTILITY NOTES

(1) THE LOCATIONS OF UTILITIES SHOWN WITHIN THESE PLANS ARE APPROXIMATE ONLY. EXACT LOCATIONS SHALL BE DETERMINED IN THE FIELD BY CONTACTING THE UTILITY COMPANIES INVOLVED. NOTIFICATION BY CALLING THE TENNESSEE ONE CALL SYSTEM, INC., AT 1-800-351-1111 AS REQUIRED BY TCA 65-31-106 WILL BE REQUIRED.

(2) UNLESS OTHERWISE NOTED, ALL UTILITY ADJUSTMENTS WILL BE PERFORMED BY THE UTILITY OR IT'S REPRESENTATIVE. THE CONTRACTOR AND UTILITY OWNERS WILL BE REQUIRED TO COOPERATE WITH EACH OTHER IN ORDER TO EXPEDITE THE WORK REQUIRED BY THIS CONTRACT. ON CONTRACTS WHERE CONSTRUCTION STAKES, LINES, AND GRADES ARE CONTRACT ITEMS, THE CONTRACTOR WILL BE REQUIRED TO PROVIDE RIGHT-OF-WAY OR SLOPE STAKES, DITCH OR STREAM BED GRADES, OR OTHER ESSENTIAL SURVEY STAKING TO PREVENT CONFLICTS WITH THE HIGHWAY CONSTRUCTION. FREQUENTLY, THIS WILL BE REQUIRED AS THE FIRST ITEM OF WORK AND AT ANY LOCATION ON THE P

(3) THE CONTRACTOR WILL PROVIDE ALL NECESSARY PROTECTIVE MEASURES TO SA DAMAGE DURING CONSTRUCTION OF THIS PROJECT. IN THE EVENT THAT SPECIAL AND AROUND THE UTILITIES, THE CONTRACTOR WILL BE REQUIRED TO FURNISH S PROTECTING UTILITIES FROM DAMAGE AND FURNISHING SPECIAL EQUIPMENT WIL ITEMS OF CONSTRUCTION.

(4) PRIOR TO SUBMITTING HIS BID, THE CONTRACTOR WILL BE SOLELY RESPONSIBLE AFFECTED UTILITIES IN ORDER TO DETERMINE THE EXTENT TO WHICH UTILITY RE HAVE UPON THE SCHEDULE OF WORK FOR THE PROJECT. WHILE SOME WORK MA THAT WILL REMAIN IN PLACE, OTHER UTILITY FACILITIES MAY NEED TO BE ADJUST CONTRACTOR'S OPERATIONS. ADVANCE CLEAR CUTTING MAY BE REQUIRED BY T CLEARING IS CALLED FOR IN THE SPECIFICATIONS AND CLEAR CUTTING IS NECES ADDITIONAL COST WILL BE INCLUDED IN THE UNIT PRICE BID FOR THE CLEARING I

(5) THE CONTRACTOR SHALL NOTIFY EACH INDIVIDUAL UTILITY OWNER OF HIS PLAN I UTILITIES. PRIOR TO COMMENCING WORK, THE CONTRACTOR SHALL CONTACT TH PROPERLY LOCATE THEIR RESPECTIVE UTILITY ON THE GROUND. THIS NOTIFICA BUSINESS DAYS PRIOR TO COMMENCEMENT OF OPERATIONS AROUND THE UTILIT

UNOFFICIAL SET

NOT FOR BIDDING

R.O.W. ACQUISITION TABLE

TRACT NO.	PROPERTY OWNERS	COUNTY RECORDS				TOTAL AREA ACRES			AREA TO BE ACQUIRED ACRES			AREA REMAINING ACRES		EASEMENT (SQUARE FEET)		
		TAX MAP NO.	PARCEL NO.	DEED DOCUMENT REFERENCE BK.	DEED DOCUMENT REFERENCE PAGE	LEFT	RIGHT	TOTAL	LEFT	RIGHT	TOTAL	LEFT	RIGHT	PERM. DRAINAGE	SLOPE	CONST.
~~1~~	~~UNITED STATES OF AMERICA~~	~~61~~	~~5~~	~~63A~~	~~324~~	~~51.836~~		~~51.836~~				~~51.836~~				
				~~71A~~	~~230~~											
~~2~~	~~UNITED STATES OF AMERICA~~	~~61~~	~~5~~	~~63A~~	~~324~~		~~44.779~~	~~44.779~~					~~44.779~~			
				~~71A~~	~~230~~											
1) 3	EASTMAN CHEMICAL COMPANY	61G/A	1	965C	343		28.643	28.643		0.375	0.375		28.268		159	0.281 AC
4	EASTMAN CHEMICAL COMPANY	61G/A	1	965C	343	29.453		29.453	3376 S.F.		3376 S.F.	29.375				2750
~~5~~	~~EASTMAN CHEMICAL COMPANY~~	~~61G/A~~	~~1~~	~~965C~~	~~343~~	~~2.699~~		~~2.699~~				~~2.699~~				
~~6~~	~~MANAGEMENT PROPERTIES, INC.~~	~~61G/A~~	~~3.5~~	~~867C~~	~~499~~		~~0.548~~	~~0.548~~					~~0.548~~			
		~~61G/A~~	~~4~~													
2) 7	EASTMAN CREDIT UNION	61G/A	1.1	1580C	110		5.465	5.465		0.351	0.351		5.114			0.156 AC
~~8~~	~~EAGLE WEST, L.L.C.~~	~~61G/A~~	~~3.2~~	~~1489C~~	~~686~~	~~2263 S.F.~~		~~2263 S.F.~~				~~2263 S.F.~~				

1) 0.152 ACRES OF R.O.W. AND 0.149 ACRES OF CONSTRUCTION EASEMENT TO BE PURCHASED IN THE NAME OF "THE STATE OF TENNESSEE", AND 0.223 ACRES OF R.O.W., 159 S.F. OF SLOPE EASEMENT, AND 0.132 ACRES OF CONSTRUCTION EASEMENT TO BE PURCHASED IN THE NAME OF "THE CITY OF KINGSPORT".

2) 0.125 ACRES OF R.O.W. AND 0.069 ACRES OF CONSTRUCTION EASEMENT TO BE PURCHASED IN THE NAME OF "THE STATE OF TENNESSEE", AND 0.226 ACRES OF R.O.W. AND 0.087 ACRES OF CONSTRUCTION EASEMENT TO BE PURCHASED IN THE NAME OF "THE CITY OF KINGSPORT".

SEALED BY

COORDINATES ARE NAD/83(1995), ARE DATUM ADJUSTED BY THE FACTOR OF 1.000030 AND TIED TO THE TGRN. ALL ELEVATIONS ARE REFERENCED TO THE NAVD 1988.

STATE OF TENNESSEE

DEPARTMENT OF TRANSPORTATION

PROPERTY MAP & R.O.W. ACQ. TABLE

SCALE: 1"=200'

6/19/2014 4:08:45 PM
H:\3131G - Sullivan Co Eastman SIA\003_PropertyMap.sht

TYPE	YEAR	PROJECT NO.	SHEET NO.
R.O.W.	2014	82956-2288-04 82085-2236-04	4
CONST.	2014	82956-3288-04 STP-126(19)	4

UTILITY OWNERS:

GAS - AGC
1440 LINCOLN ST., KINGSPORT, TN 37660
DARRELL KUINIVEN
(423)229-7209

ATMOS ENERGY
2833 W. MARKET ST., JOHNSON CITY, TN 37604
JAMES HOIT
(423)926-1888

CABLE - CHARTER COMMUNICATIONS
10417 WALLACE ALLEY ST., KINGSPORT, TN 37663
MIKE ROBERTS
(423)791-3816

TELEPHONE - EMBARQ (CENTURYLINK)
101 NORTH ROAN ST., JOHNSON CITY, TN 37601
ANDY ICE
(423)461-7724

POWER - AMERICAN ELECTRIC POWER
420 RIVERPORT RD., KINGSPORT, TN 37660
ROBBIE ARNOLD
(423)578-2228

FIBER - LEVEL 3 COMMUNICATIONS
4021 ROSE LAKE DR., CHARLOTTE, NC 28217
KARL MICHAELSON
(704)733-3240

CITY OF KINGSPORT
225 W. CENTER ST., KINGSPORT, TN 37660
TIM ELSEA
(423)224-2426

WATER-SEWER CITY OF KINGSPORT
225 W. CENTER ST., KINGSPORT, TN 37660
SAM CHASE
(423)224-2916

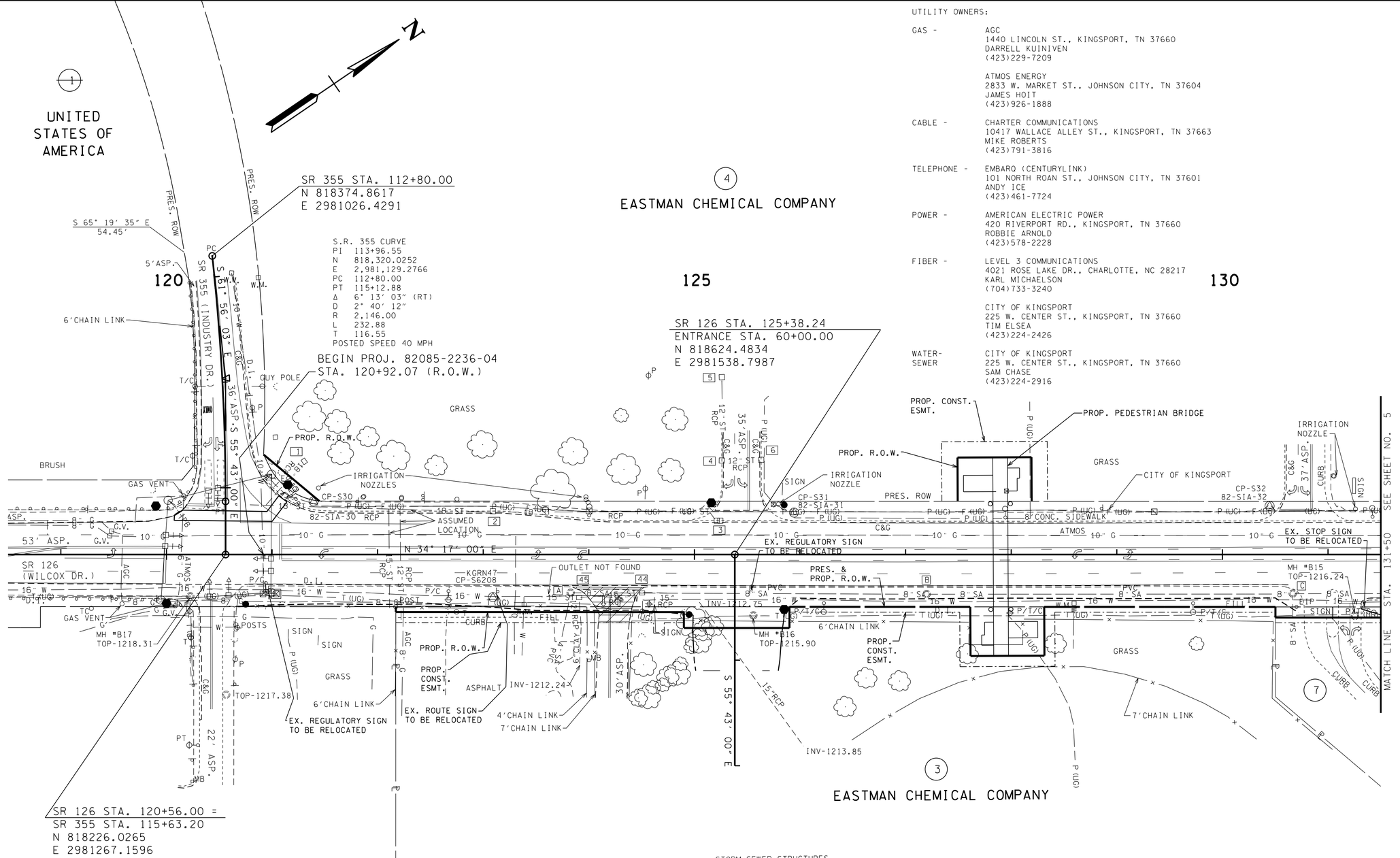

SR 126 STA. 120+56.00 =
SR 355 STA. 115+63.20
N 818226.0265
E 2981267.1596

SANITARY SEWER STRUCTURES

A MH
TOP-1214.65
INV-1211.81

B MH
TOP-1214.79
INV(S)-1210.54
INV(N)-1210.44

C MH
TOP-1216.36
INV(E)-1209.34
INV(S)-1209.40
INV(N)-1209.24

STORM SEWER STRUCTURES

1 CB
TOP-1211.13
BOT-1208.72
INV-1208.72

2 DI
TOP-1214.90
BOT-1209.70
INV-1209.70

3 DBL DI
TOP-1213.80
BOT-1211.34
INV-1211.34

4 DI
TOP-1213.77
BOT-1210.56
INV-1210.56

5 DI
TOP-1214.43
BOT-1209.61
INV-1209.61

6 DI
TOP-1213.81
BOT-1211.14
INV-1211.14

44 CB
TOP-1213.39
BOT-1211.63
INV(S)-1211.63
INV(N)-1211.74

45 CB
TOP-1213.53
BOT-1210.73
INV(E)-1210.83
INV(N)-1211.25
INV(S)-1210.83

EXIST. PAVEMENT TO BE REMOVED.

CONTROL POINT TABLE

Point	North	East	Elevation	Station	Offset
S30	818323.2748	2981272.6693	1216.75	121+39.46	50.23(LT)
S31	818693.1920	2981537.6589	1214.58	125+94.37	39.64(LT)
S32	819068.8441	2981786.1919	1216.59	130+44.75	45.89(LT)
S33	819674.5450	2982289.6948	1211.97	138+17.13	56.01(RT)
S34	819498.2626	2982580.3274	1210.96	23+89.55	42.69(LT)

UNOFFICIAL SET

NOT FOR BIDDING

SEALED BY

RANDY W. BECKNER
REGISTERED ENGINEER
No. 101558
STATE OF TENNESSEE
6/20/14

COORDINATES ARE NAD/83(1995), ARE DATUM ADJUSTED BY THE FACTOR OF 1.000030 AND TIED TO THE TGRN. ALL ELEVATIONS ARE REFERENCED TO THE NAVD 1988.

STATE OF TENNESSEE
DEPARTMENT OF TRANSPORTATION

PRESENT LAYOUT

STA. 118+50 TO STA. 131+50

SCALE: 1"= 50'

6/19/2014 4:09:07 PM
H:±3131G - Sullivan Co Eastman SIA±004_PresentLayout1.sht

TYPE	YEAR	PROJECT NO.	SHEET NO.
R.O.W.	2014	82956-2288-04 82085-2236-04	4A
CONST.	2014	82956-3288-04 STP-126(19)	4A

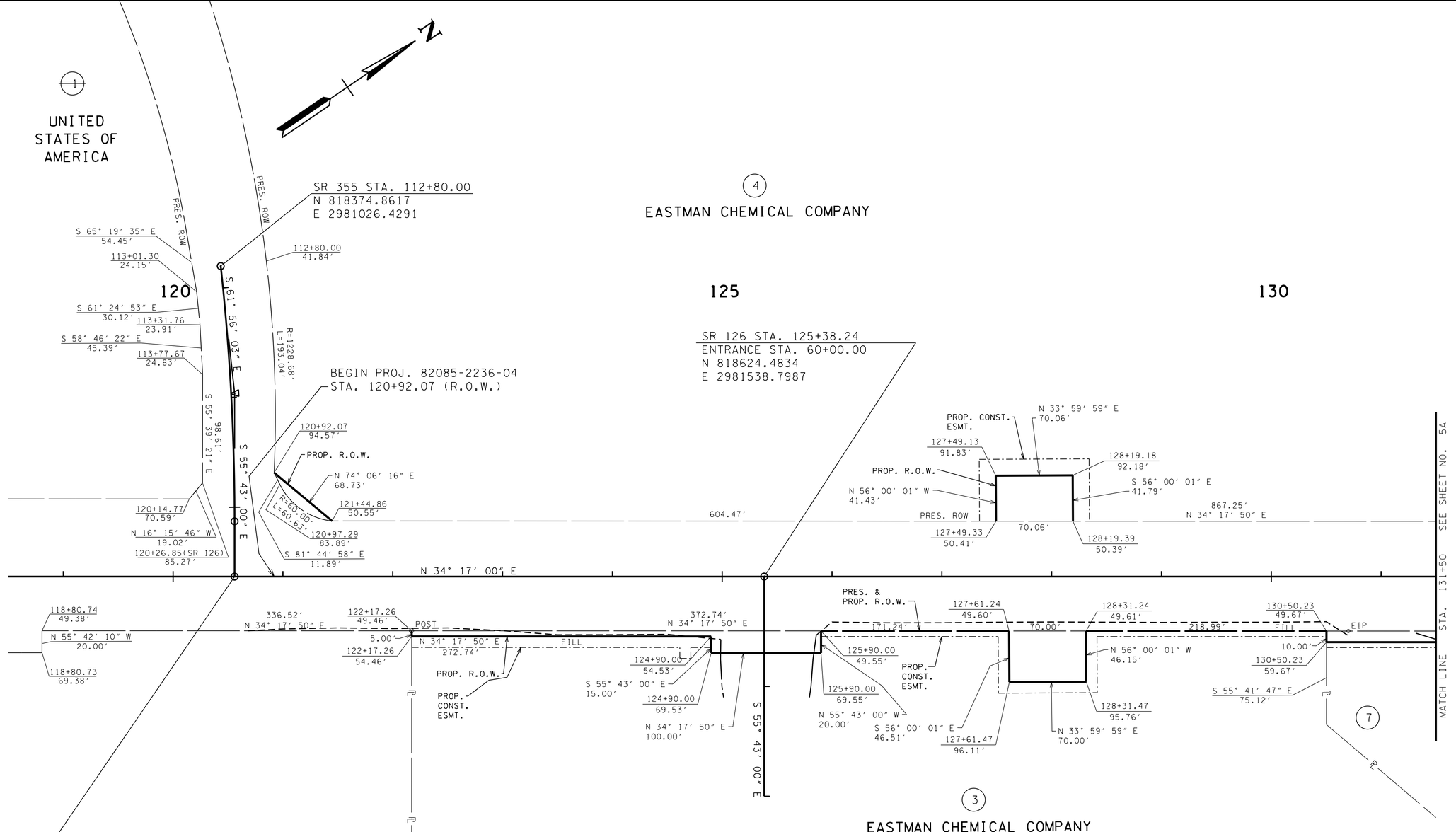

UNOFFICIAL SET

NOT FOR BIDDING

SEALED BY

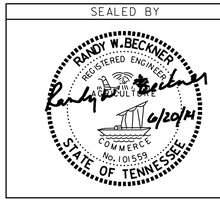

COORDINATES ARE NAD/83(1995), ARE DATUM ADJUSTED BY THE FACTOR OF 1.000030 AND TIED TO THE TGRN. ALL ELEVATIONS ARE REFERENCED TO THE NAVD 1988.

STATE OF TENNESSEE

DEPARTMENT OF TRANSPORTATION

R.O.W. DETAILS

STA. 118+50 TO STA. 131+50

SCALE: 1"= 50'

6/19/2014 4:09:08 PM
H:±313G - Sullivan Co Eastman SIA±004A_ROWDetails1.sht

TYPE	YEAR	PROJECT NO.	SHEET NO.
R.O.W.	2014	82956-2288-04 82085-2236-04	4B
CONST.	2014	82956-3288-04 STP-126(19)	4B

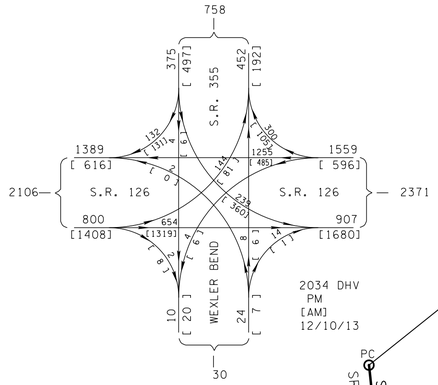

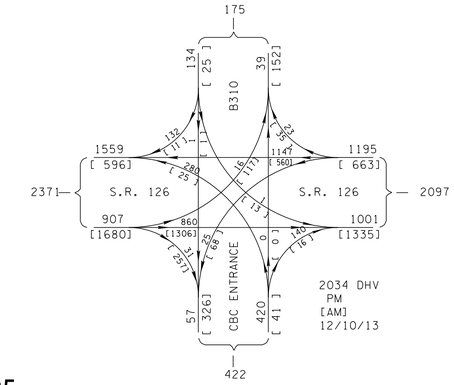

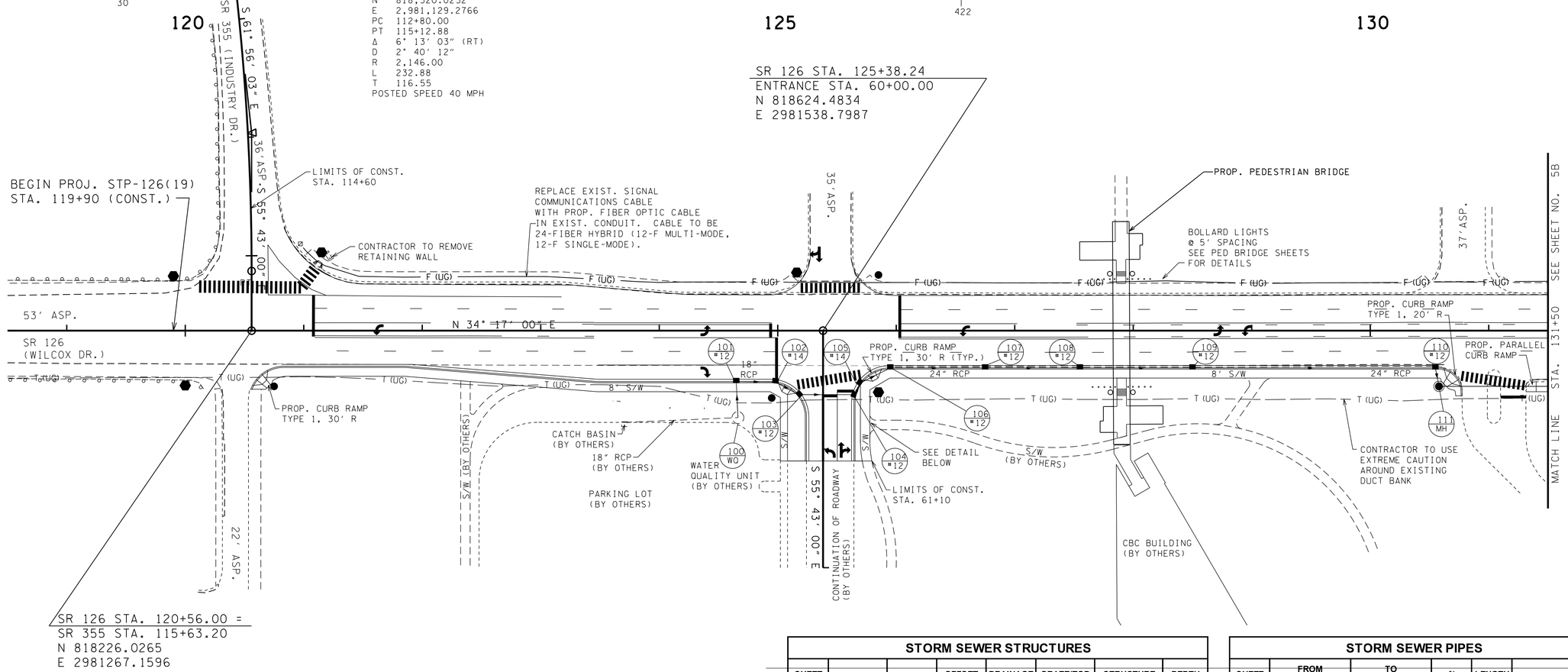

SR 126 STA. 120+56.00 =
SR 355 STA. 115+63.20
N 818226.0265
E 2981267.1596

LOWERED CURB DETAIL
SCALE: 1″=20′

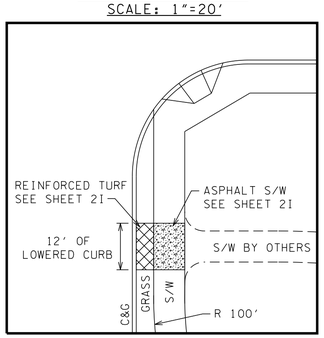

STORM SEWER STRUCTURES

SHEET NO.	LOCATION	STATION	OFFSET (FT.)	DRAINAGE CODE	GRATE/TOP ELEV.	STRUCTURE TYPE	DEPTH (FT.)
4B	SR126	124+66.50	73.5	WQ-100	*	*	*
4B	SR126	124+65.00	43	CB-101	1214.07	#12	6.45
4B	SR126	124+98.00	43.24	CB-102	1213.87	#14	6.37
4B	ENTRANCE	60+54.00	20.78	CB-103	1213.84	#12	6.41
4B	ENTRANCE	60+54.00	-26.95	CB-104	1213.74	#12	6.48
4B	ENTRANCE	60+44.00	-31.63	CB-105	1213.70	#14	6.49
4B	SR126	125+95.00	31.5	CB-106	1214.28	#12	7.19
4B	SR126	126+75.00	31.5	CB-107	1214.63	#12	7.86
4B	SR126	127+55.00	31.5	CB-108	1215.03	#12	8.57
4B	SR126	128+50.00	31.5	CB-109	1215.16	#12	9.07
4B	SR126	130+55.00	31.5	CB-110	1215.89	#12	10.60
4B	SR126	130+58.00	47	MH-111	1217.10	MH	11.89
5B	SR126	133+85.00	47	MH-112	1215.10	MH	11.20
5B	SR126	136+70.00	48	MH-113	1212.90	MH	10.14
5B	SR126	136+81.59	84.98	EW-114	-	EW	-
5B	LINCOLN	25+78.00	31.31	CB-115	1211.85	#12	5.74
5B	LINCOLN	25+90.79	53.22	EW-116	-	EW	-

* STRUCTURE TO BE PROVIDED AND INSTALLED BY OTHERS.

STORM SEWER PIPES

SHEET NO.	FROM		TO		% GRADE	LENGTH (FT.)	PIPE SIZE
	CODE	OUTLET ELEV.	CODE	INLET ELEV.			
4B	WQ-100	1207.75	CB-101	1207.62	0.5	30	18 Inch Dia. Circular
4B	CB-101	1207.62	CB-102	1207.50	0.4	31	18 Inch Dia. Circular
4B	CB-102	1207.50	CB-103	1207.43	0.4	17	24 Inch Dia. Circular
4B	CB-103	1207.43	CB-104	1207.26	0.4	43	24 Inch Dia. Circular
4B	CB-104	1207.26	CB-105	1207.21	0.4	13	24 Inch Dia. Circular
4B	CB-105	1207.21	CB-106	1207.09	0.4	29	24 Inch Dia. Circular
4B	CB-106	1207.09	CB-107	1206.77	0.4	80	24 Inch Dia. Circular
4B	CB-107	1206.77	CB-108	1206.46	0.4	76	24 Inch Dia. Circular
4B	CB-108	1206.46	CB-109	1206.09	0.4	93	24 Inch Dia. Circular
4B	CB-109	1206.09	CB-110	1205.29	0.4	201	24 Inch Dia. Circular
4B	CB-110	1205.29	MH-111	1205.21	0.4	20	24 Inch Dia. Circular
5B	MH-111	1205.21	MH-112	1203.90	0.4	327	24 Inch Dia. Circular
5B	MH-112	1203.90	MH-113	1202.76	0.4	285	24 Inch Dia. Circular
5B	MH-113	1202.76	EW-114	1202.60	0.4	40	24 Inch Dia. Circular
5B	CB-115	1206.11	EW-116	1206.00	0.4	28	18 Inch Dia. Circular

UNOFFICIAL SET

NOT FOR BIDDING

SEALED BY

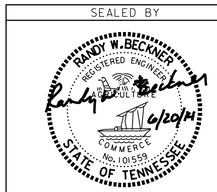

COORDINATES ARE NAD/83(1995), ARE DATUM ADJUSTED BY THE FACTOR OF 1.000030 AND TIED TO THE TGRN. ALL ELEVATIONS ARE REFERENCED TO THE NAVD 1988.

STATE OF TENNESSEE
DEPARTMENT OF TRANSPORTATION

PROPOSED LAYOUT

STA. 118+50 TO STA. 131+50

SCALE: 1″= 50′

6/19/2014 4:09:09 PM
H:\313G - Sullivan Co Eastman SIA\004B_ProposedLayout1.sht

TYPE	YEAR	PROJECT NO.	SHEET NO.
R.O.W.	2014	82956-2288-04 82085-2236-04	4C
CONST.	2014	82956-3288-04 STP-126(19)	4C

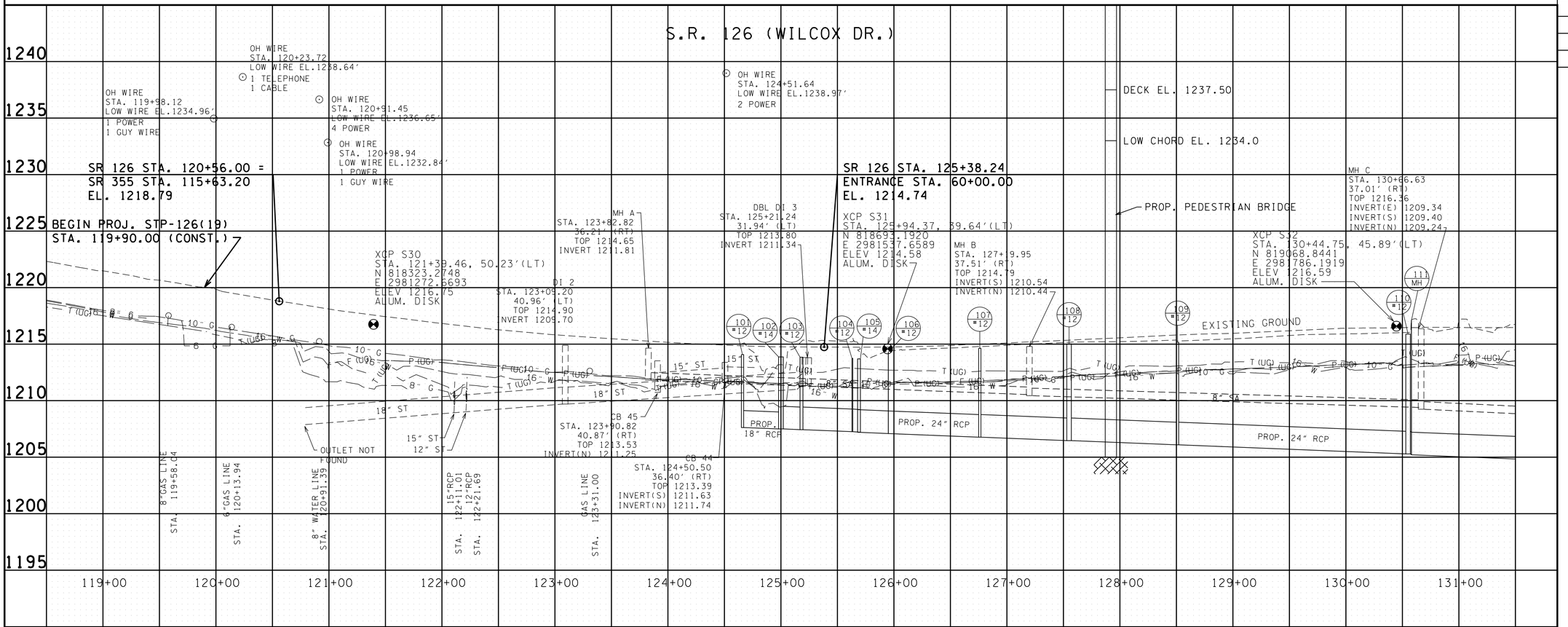

UNOFFICIAL SET

NOT FOR BIDDING

SEALED BY

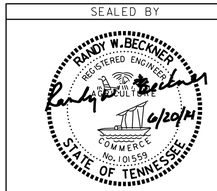

STATE OF TENNESSEE
DEPARTMENT OF TRANSPORTATION

PROFILES

STA. 118+50 TO STA. 131+50

SCALE: 1"= 50' HORIZ.
1"= 5' VERT.

6/19/2014 4:09:17 PM
H:\3131G - Sullivan Co Eastman SIA\004C_Profile1.sht

TYPE	YEAR	PROJECT NO.	SHEET NO.
R.O.W.	2014	82956-2288-04 82085-2236-04	5
CONST.	2014	82956-3288-04 STP-126(19)	5

MLK CURVE
PI 10+47.87
N 819,762.5617
E 2,981,994.2115
PC 10+00.00
PT 10+95.71
Δ 4° 01′ 56″ (LT)
D 4° 12′ 47″
R 1,360.00
L 95.71
T 47.87
POSTED SPEED 25 MPH

SULLIVAN ST. CURVE
PI 50+97.33
N 819,766.5754
E 2,982,621.1054
PC 50+00.00
PT 51+88.29
Δ 35° 46′ 31″ (RT)
D 19° 00′ 00″
R 301.56
L 188.29
T 97.33
POSTED SPEED 30 MPH

SR 126 STA. 137+67.90 =
MARTIN LUTHER KING JR. DR.
STA. 13+00.00
N 819647.9833
E 2982218.8418

LINCOLN ST. STA. 25+01.66 =
SULLIVAN ST. STA. 54+50.00
N 819409.7459
E 2982660.8640

LINCOLN ST. CURVE #2
PI 28+18.47
N 819,270.5639
E 2,982,592.9458
PC 27+39.59
PT 28+97.11
Δ 7° 55′ 00″ (RT)
D 5° 01′ 33″
R 1,140.00
L 157.52
T 78.88
POSTED SPEED 40 MPH

SR 126 STA. 137+61.32 =
LINCOLN ST. STA. 20+00.00
N 819641.9516
E 2982216.1973

S.R. 126 CURVE
PI 137+41.77
N 819,618.9130
E 2,982,216.7291
PC 136+12.78
PT 138+68.66
Δ 17° 52′ 46″ (LT)
D 6° 59′ 14″
R 820.00
L 255.89
T 128.99
POSTED SPEED 35 MPH

LINCOLN ST. STA. 24+95.26
SULLIVAN EXT. STA. 55+00.00
N 819412.5912
E 2982655.1356

LINCOLN ST. CURVE #1
PI 24+26.17
N 819,442.7541
E 2,982,592.9458
PC 23+02.57
PT 25+49.75
Δ 1° 50′ 00″ (LT)
D 0° 44′ 30″
R 7,725.00
L 247.18
T 123.60
POSTED SPEED 40 MPH

BEGIN PROJ. 82956-2288-04
STA. 22+02.80 (R.O.W.)

END PROJ. 82956-2288-04
STA. 25+96.80 (R.O.W.)

END PROJ. 82085-2236-04
STA. 136+51.41 (R.O.W.)

EX. REGULATORY SIGN TO BE RELOCATED

PRES. & PROP. R.O.W.

PROP. CONST. ESMT.

EX. GUIDE SIGN TO BE RELOCATED

PROP. R.O.W.

PROP. SINGLE-SPAN CONC. GIRDER BRIDGE

MADD BRANCH → STR-1

OVERHEAD RAILROAD CROSSING

APPROX. R/R ROW

MANAGEMENT PROPERTIES, INC.

EASTMAN CHEMICAL COMPANY

EAGLE WEST, L.L.C.

EASTMAN CREDIT UNION

SR 126 (WILCOX DR.) 60′ASP.

LINCOLN ST.

MLK DR.

SULLIVAN ST.

SULLIVAN CT.

MATCH LINE STA. 131+50 SEE SHEET NO. 4

NOTE:
ANY DAMAGE TO EXISTING FACILITIES ON TRACT 7 (PAVEMENT, SIGNAGE, LANDSCAPING, ETC.) WILL BE REPAIRED BY THE CONTRACTOR AT HIS EXPENSE.

SANITARY SEWER STRUCTURES

D MH
TOP-1214.86
INV(S)-1207.86
INV(N)-1207.92

E MH
TOP-1212.69
INV-1206.44

F MH
TOP-1211.29
INV(S)-1205.54
INV(W)-1205.53

G MH
TOP-1211.04
INV(E)-1205.41
INV(N)-1205.36

H MH
TOP-1210.24
INV(S)-1207.54
INV(E)-1204.59
INV(W)-1204.54

I MH
TOP-1210.09
INV(S)-1205.75
INV(W)-1204.82
INV(E)-1204.83

J MH
TOP-1210.05
INV-120

K MH
TOP-121
INV(E)-
INV(W)-

L MH
TOP-121
INV(E)-
INV(W)-

M MH
TOP-1211.33
INV(S)-1206.93
INV(W)-1206.78

N MH
TOP-1211.43
INV-1206.82

O MH
TOP-1219.90
INV(E)-1208.74
INV(W)-1208.63

P MH
TOP-1220.73
INV(W)-1212.61

Q MH
TOP-1209.39
INV(E)-1203.29

R MH
TOP-1212.59
INV(W)-1201.71
INV(E)-1201.67

S MH
TOP-1212.20
INV-1203.13

STORM SEWER STRUCTURES

7 CB
TOP-1214.51
BOT-1208.04
INV-1208.04

8 DI
TOP-1214.95
BOT-1210.78
INV-1210.90

9 CB
TOP-1213.18
BOT-1207.38
INV-1207.38

10 DI
TOP-1213.31
BOT-1209.07
INV-1209.07

11 CB
TOP-1211.21
BOT-1206.76
INV-1206.76

12 DI
TOP-1211.52
BOT-1207.37
INV-1207.37

13 DI
TOP-1209.19
BOT-1205.63
INV-1205.63

14 MH
TOP-1210.43
BOT-1205.31
INV(S)-1205.38
INV(N)-1205.38
INV(E)-1205.31

15 MH
TOP-1211.58
BOT-1203.71
INV(S)-1203.84
INV(W)-1203.82
INV(E)-1203.71

16 DI
TOP-1209.21
BOT-1206.82
INV-1206.82

17 CB
TOP-1209.98
BOT-1207.46
INV-1207.46

18 CB
TOP-1211.07
BOT-1208.60
INV-1208.60

19 DI
TOP-1207.81
BOT-1202.99
INV-1203.31

20 DI
TOP-1206.50
BOT-1202.84
INV-1202.84

21 DI
TOP-1206.12
BOT-1202.64
INV-1202.64

22 DI
TOP-1207.07
BOT-1203.01
INV-1203.01

23 MH
TOP-1211.49
BOT-1202.07
INV-1202.07

24 DI
TOP-1209.86
BOT-1201.64
INV-1201.64

25 DI
TOP-1209.42
BOT-1199.80
INV-1199.80

26 DI
TOP-1209.43
BOT-1199.67
INV-1199.67

27 DI
TOP-1209.64
BOT-1199.98
INV-1199.98

28 DI
TOP-1206.93
BOT-1200.73
INV-1200.73

29 DI
TOP-1208.22
BOT-1204.52
INV-1204.52

30 DI
TOP-1206.05
BOT-1202.14
INV-1202.14

31 DI
TOP-1206.03
BOT-1202.19
INV-1202.19

32 DI
TOP-1205.99
BOT-1202.46
INV-1202.46

33 DI
TOP-1206.78
BOT-1203.80
INV-1203.80

34 DI
TOP-1208.27
BOT-1204.00
INV-1204.00

35 DI
TOP-1207.24
BOT-1202.18
INV-1202.18

36 DI
TOP-1209.17
BOT-1205.29
INV-1205.29

37 DI
TOP-1212.35
BOT-1209.71
INV-1209.71

38 DI
TOP-1212.75
BOT-1208.65
INV-1208.65

39 DI
TOP-1210.93
BOT-1203.29
INV-1203.29

40 DI
TOP-1209.38
BOT-1198.98
INV-1198.98

41 DI
TOP-1209.51
BOT-1198.98
INV(W)-1204.71
INV(E)-1198.98

42 DI
TOP-1210.58
BOT-1206.07
INV-1206.07

43 DI
TOP-1214.24
BOT-1211.63
INV-1212.74

46 MH
TOP-1210.08
BOT-1206.26
INV-1206.26
DEBRIS FILLED

UNOFFICIAL SET

NOT FOR BIDDING

SEALED BY

RANDY W. BECKNER
REGISTERED ENGINEER
No. 101559
AGRICULTURE
COMMERCE
STATE OF TENNESSEE
6/20/14

COORDINATES ARE NAD/83(1995), ARE DATUM ADJUSTED BY THE FACTOR OF 1.000030 AND TIED TO THE TGRN. ALL ELEVATIONS ARE REFERENCED TO THE NAVD 1988.

STATE OF TENNESSEE
DEPARTMENT OF TRANSPORTATION

PRESENT LAYOUT

STA. 131+50 TO STA. 140+00

SCALE: 1"= 50′

6/19/2014 4:09:21 PM
H:±3131G - Sullivan Co Eastman SIA±005_PresentLayout2.sht

TYPE	YEAR	PROJECT NO.	SHEET NO.
R.O.W.	2014	82956-2288-04 82085-2236-04	5A
CONST.	2014	82956-3288-04 STP-126(19)	5A

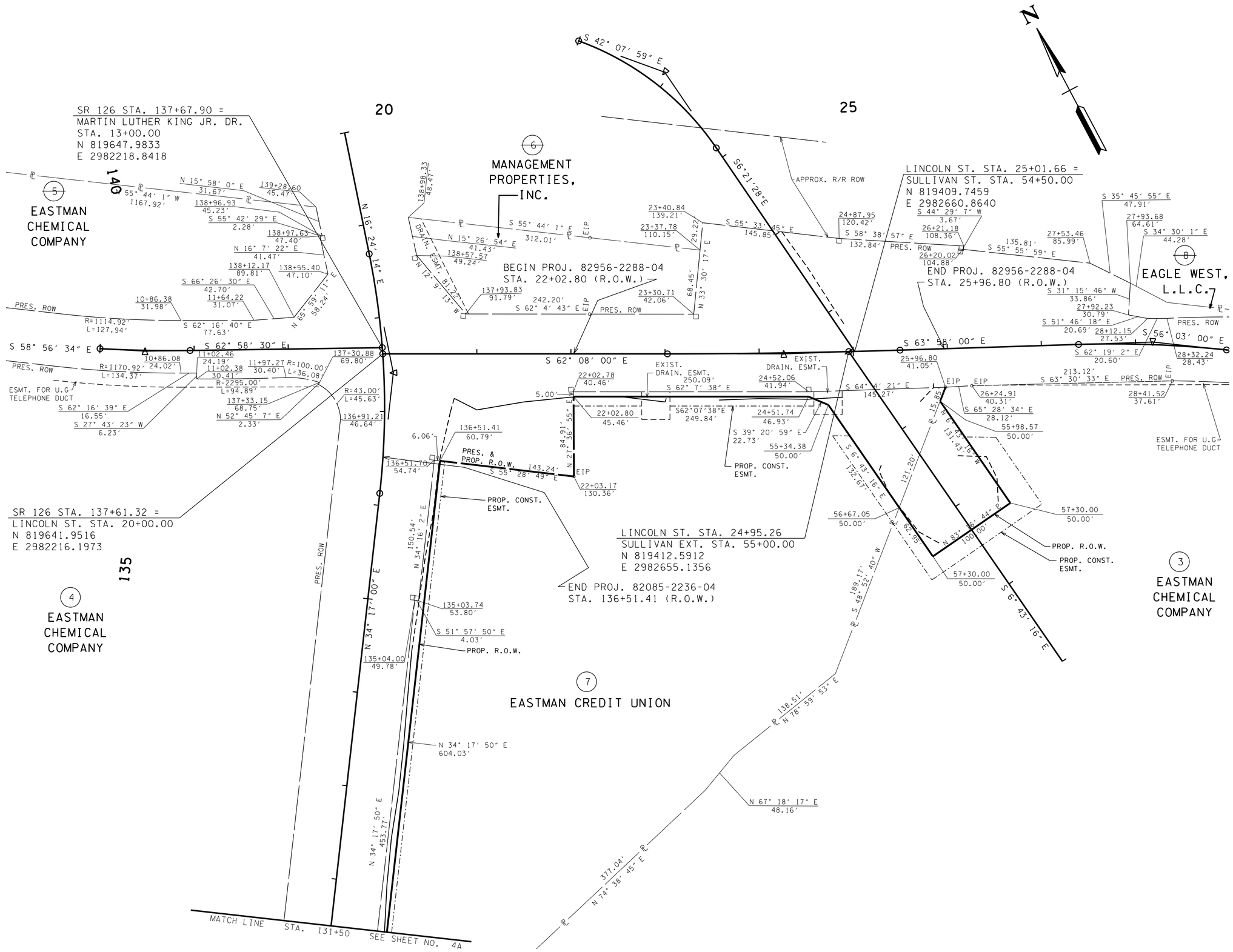

UNOFFICIAL SET

NOT FOR BIDDING

SEALED BY

RANDY W. BECKNER
REGISTERED ENGINEER
No. 101559
COMMERCE
STATE OF TENNESSEE
6/20/14

COORDINATES ARE NAD/83(1995), ARE DATUM ADJUSTED BY THE FACTOR OF 1.000030 AND TIED TO THE TGRN. ALL ELEVATIONS ARE REFERENCED TO THE NAVD 1988.

STATE OF TENNESSEE
DEPARTMENT OF TRANSPORTATION

R.O.W. DETAILS

STA. 131+50 TO STA. 140+00

SCALE: 1"= 50'

6/19/2014 4:09:22 PM
H:±313G - Sullivan Co Eastman SIA±005A_ROWDetails2.sht

TYPE	YEAR	PROJECT NO.	SHEET NO.
R.O.W.	2014	82956-2288-04 82085-2236-04	5B
CONST.	2014	82956-3288-04 STP-126(19)	5B

MLK CURVE
PI 10+47.87
N 819,762.5617
E 2,981,994.2115
PC 10+00.00
PT 10+95.71
Δ 4° 01′ 56″ (LT)
D 4° 12′ 47″
R 1,360.00
L 95.71
T 47.87
POSTED SPEED 25 MPH

SULLIVAN ST. CURVE
PI 50+97.33
N 819,766.5754
E 2,982,621.1054
PC 50+00.00
PT 51+88.29
Δ 35° 46′ 31″ (RT)
D 19° 00′ 00″
R 301.56
L 188.29
T 97.33
POSTED SPEED 30 MPH

LINCOLN ST. CURVE #2
PI 28+18.47
N 819,270.5639
E 2,982,592.9458
PC 27+39.59
PT 28+97.11
Δ 7° 55′ 00″ (RT)
D 5° 01′ 33″
R 1,140.00
L 157.52
T 78.88
POSTED SPEED 40 MPH

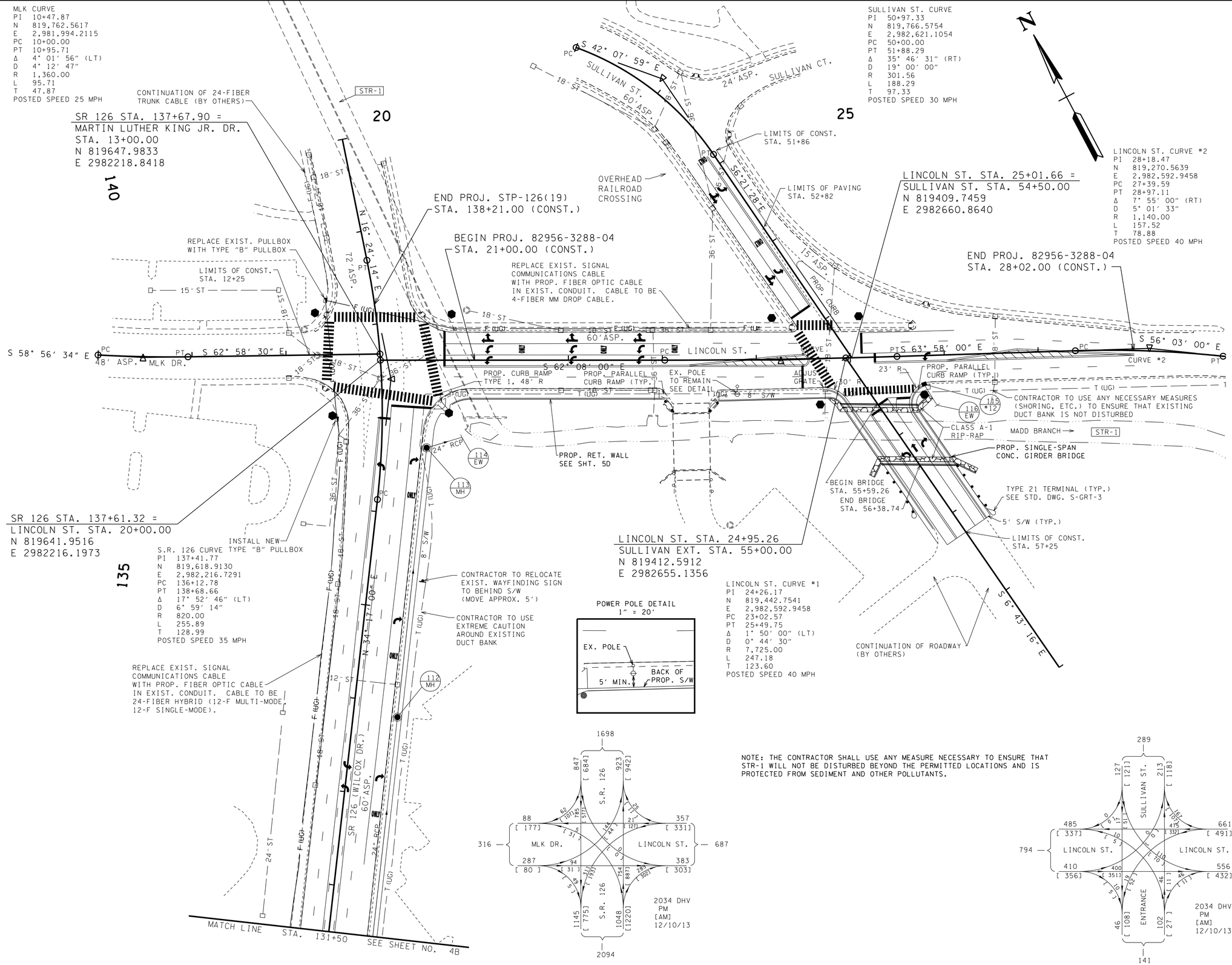

POWER POLE DETAIL
1" = 20′

NOTE: THE CONTRACTOR SHALL USE ANY MEASURE NECESSARY TO ENSURE THAT STR-1 WILL NOT BE DISTURBED BEYOND THE PERMITTED LOCATIONS AND IS PROTECTED FROM SEDIMENT AND OTHER POLLUTANTS.

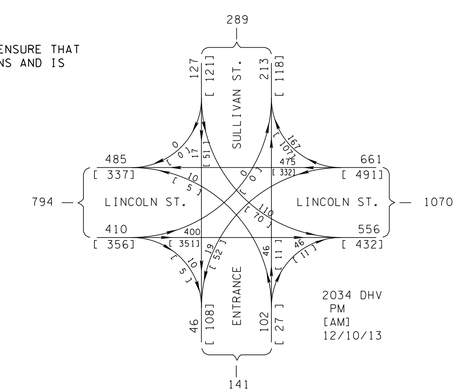

UNOFFICIAL SET
NOT FOR BIDDING

SEALED BY

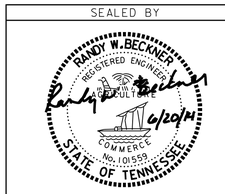

COORDINATES ARE NAD/83(1995), ARE DATUM ADJUSTED BY THE FACTOR OF 1.000030 AND TIED TO THE TGRN. ALL ELEVATIONS ARE REFERENCED TO THE NAVD 1988.

STATE OF TENNESSEE
DEPARTMENT OF TRANSPORTATION

PROPOSED LAYOUT

STA. 131+50 TO STA. 140+00

SCALE: 1"= 50′

6/19/2014 4:09:23 PM
H:\3131G - Sullivan Co Eastman SIA\005B_ProposedLayout2.sht

TYPE	YEAR	PROJECT NO.	SHEET NO.
R.O.W.	2014	82956-2288-04 82085-2236-04	5C
CONST.	2014	82956-3288-04 STP-126(19)	5C

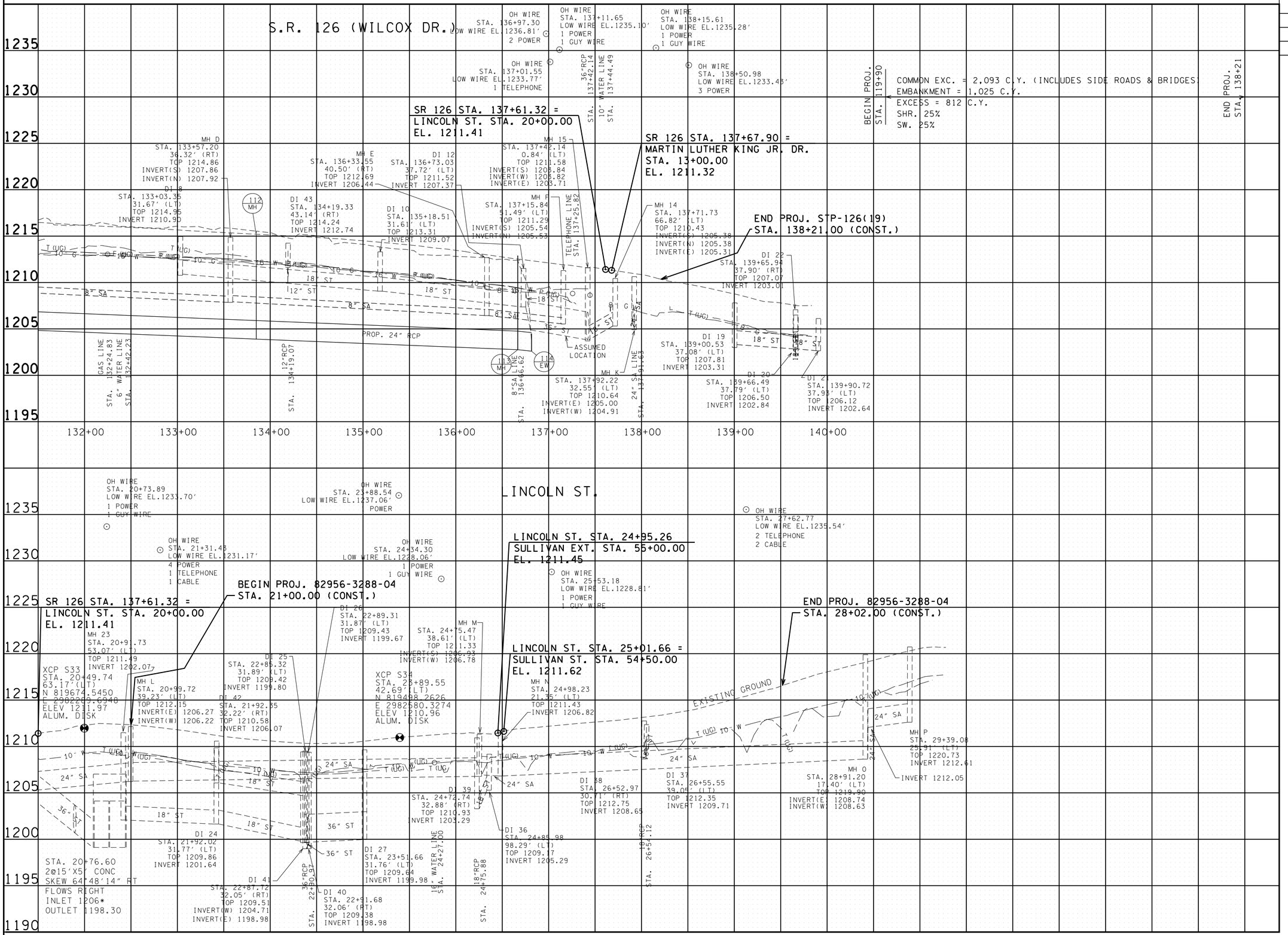

UNOFFICIAL SET
NOT FOR BIDDING

SEALED BY

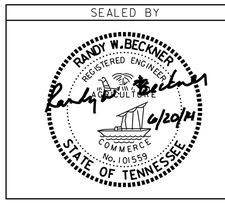

STATE OF TENNESSEE
DEPARTMENT OF TRANSPORTATION

PROFILES

STA. 131+50 TO STA. 140+00
SCALE: 1"= 50' HORIZ.
1"= 5' VERT.

6/19/2014 4:09:24 PM
H:\3131G - Sullivan Co Eastman SIA\005C_Profile2.shtml

TYPE	YEAR	PROJECT NO.	SHEET NO.
R.O.W.	2014	82956-2288-04 82085-2236-04	5D
CONST.	2014	82956-3288-04 STP-126(19)	5D

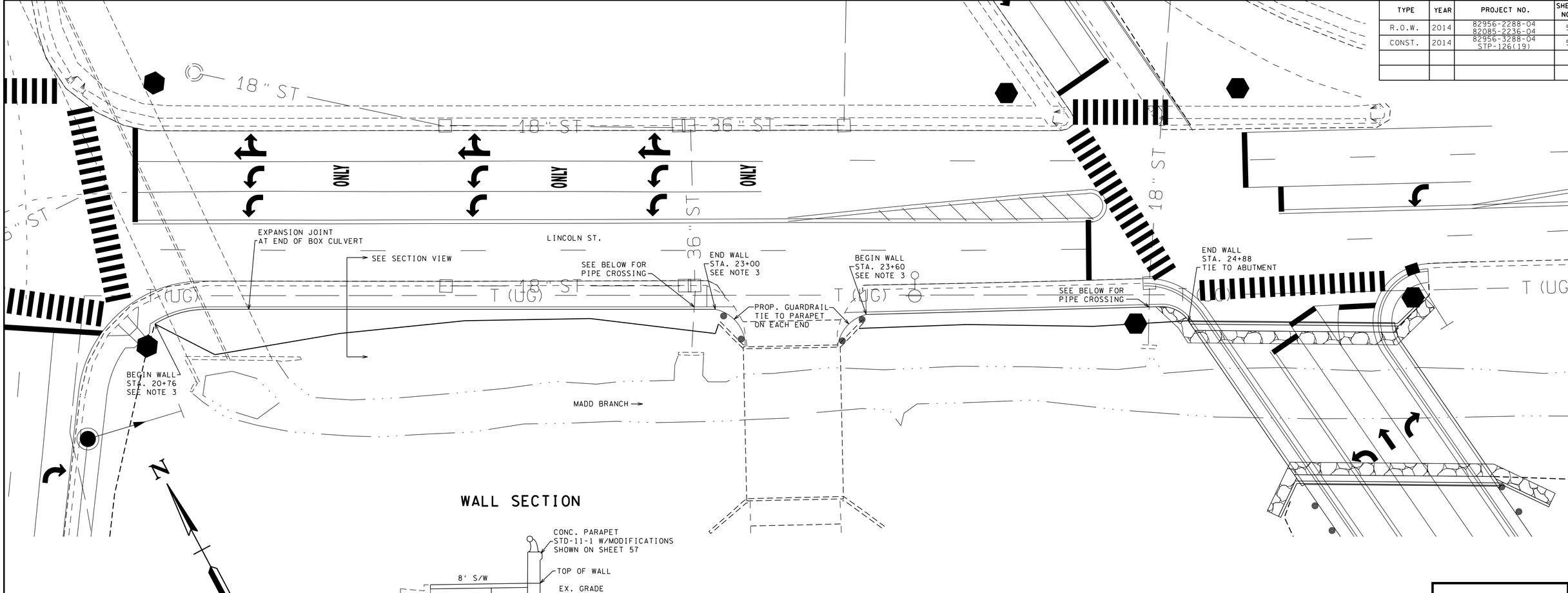

WALL SECTION

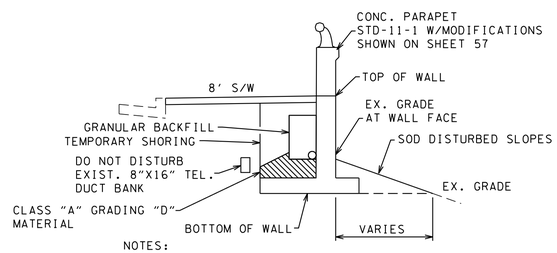

NOTES:

1. SEE SHEET U-64-196 FOR ADDITIONAL DETAILS.
2. THE EXPOSED FACE OF THE WALL SHALL RECEIVE AN APPLIED TEXTURE FINISH. REFER TO SHEET U-64-190 FOR DETAILS.
3. PROVIDE TDOT STD-11-1 TERMINAL WALL WITH MODIFICATIONS SHOWN ON SHEET U-64-190.
4. PAYMENT INCLUDES MODIFYING EXISTING GUARDRAIL AS NECESSARY.

LINCOLN ST. RETAINING WALL

STA.	ELEVATIONS			WALL HEIGHT (FT.)
	TOP	AT WALL FACE	BOTTOM	
20+76	1212.72	1211.37	1206.20	6.52
21+00	1212.57	1210.88	1206.20	6.37
21+50	1211.86	1211.58	1206.20	5.66
22+00	1211.25	1208.22	1206.20	5.05
22+50	1210.59	1207.52	1206.20	4.39
23+00	1210.49	1209.72	1206.20	4.29
23+60	1211.15	1209.79	1206.20	4.95
24+00	1211.35	1208.10	1206.20	5.15
24+50	1211.57	1209.77	1206.20	5.37
24+88	1211.67	1208.08	1206.20	5.47

WALL PROFILE

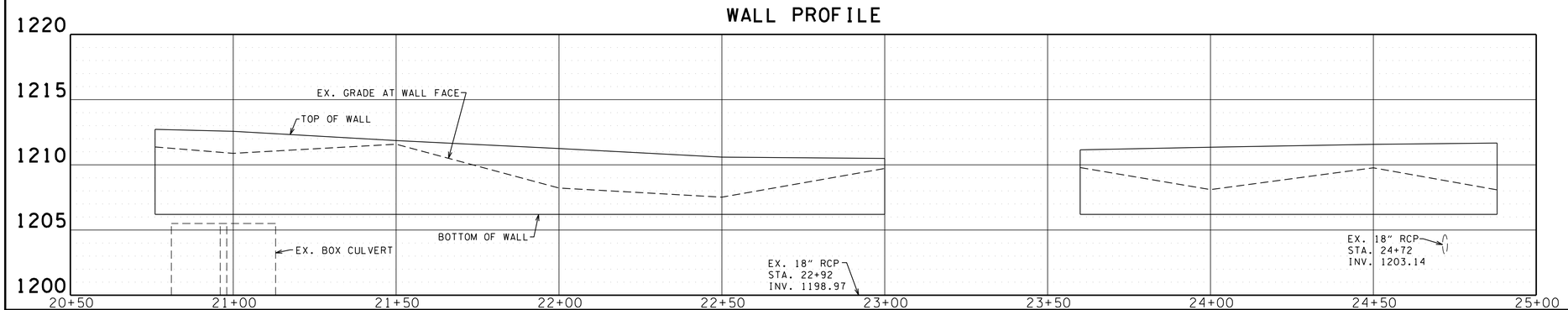

UNOFFICIAL SET

NOT FOR BIDDING

SEALED BY

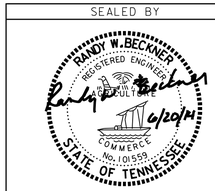

COORDINATES ARE NAD/83(1995), ARE DATUM ADJUSTED BY THE FACTOR OF 1.000030 AND TIED TO THE TGRN. ALL ELEVATIONS ARE REFERENCED TO THE NAVD 1988.

STATE OF TENNESSEE

DEPARTMENT OF TRANSPORTATION

LINCOLN ST. RETAINING WALL DETAILS

SCALE: 1"= 20' HORIZ.
1"= 4' VERT.

6/19/2014 4:09:25 PM
H:\313G - Sullivan Co Eastman SIA\0050_RetainingWall.sht

TYPE	YEAR	PROJECT NO.	SHEET NO.
R.O.W.	2014	82956-2288-04 82085-2236-04	6
CONST.	2014	82956-3288-04 STP-126(19)	6

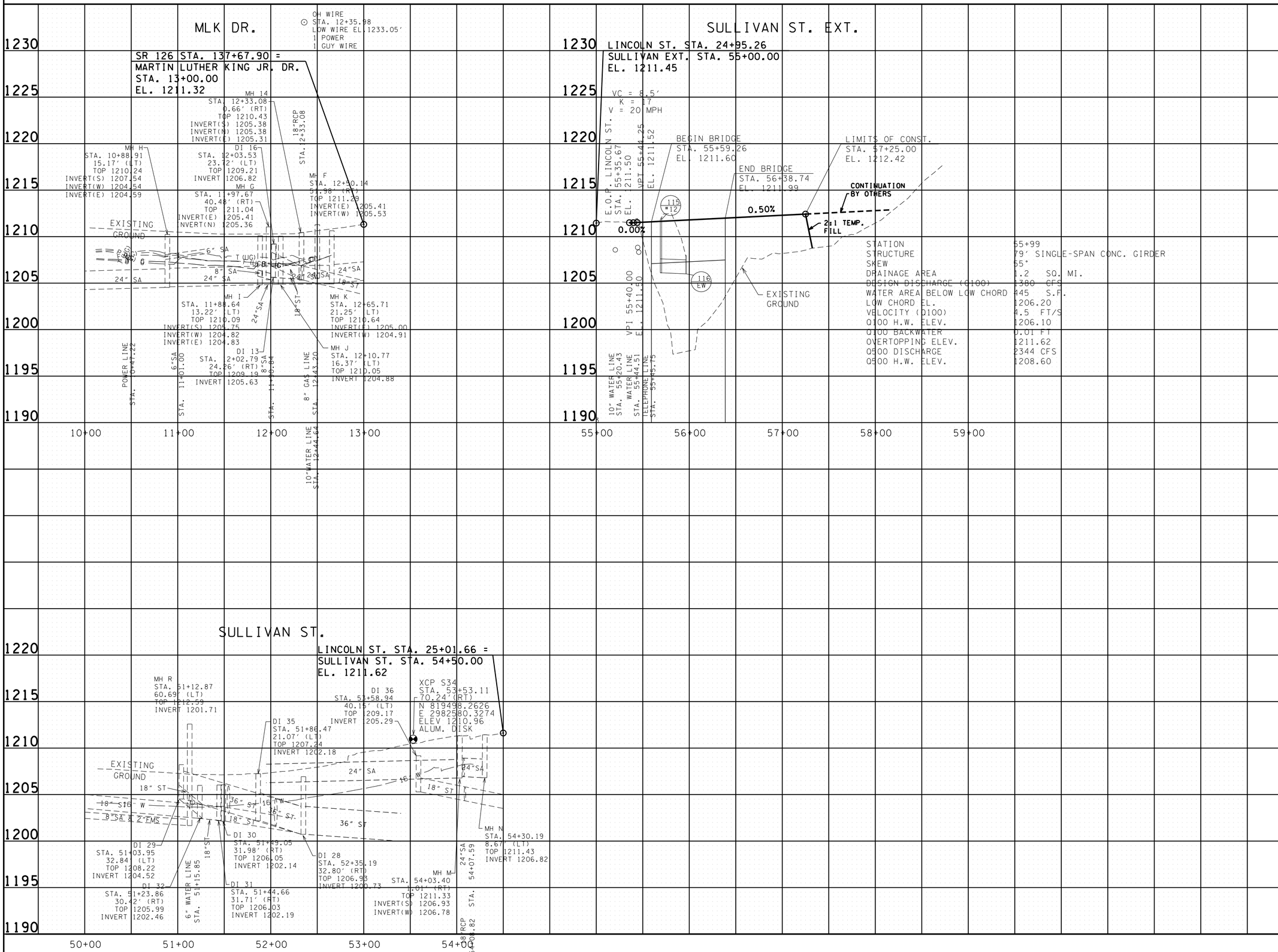

6/19/2014 4:09:28 PM
H:±313G - Sullivan Co Eastman SIA±006_Profile3.sht

UNOFFICIAL SET

NOT FOR BIDDING

SEALED BY

RANDY W. BECKNER
REGISTERED ENGINEER
No. 101559
STATE OF TENNESSEE
6/20/14

STATE OF TENNESSEE
DEPARTMENT OF TRANSPORTATION

SIDE ROAD PROFILES

SCALE: 1"= 50' HORIZ.
1"= 5' VERT.

TYPE	YEAR	PROJECT NO.	SHEET NO.
R.O.W.	2014	82956-2288-04 82085-2236-04	7
CONST.	2014	82956-3288-04 STP-126(19)	7

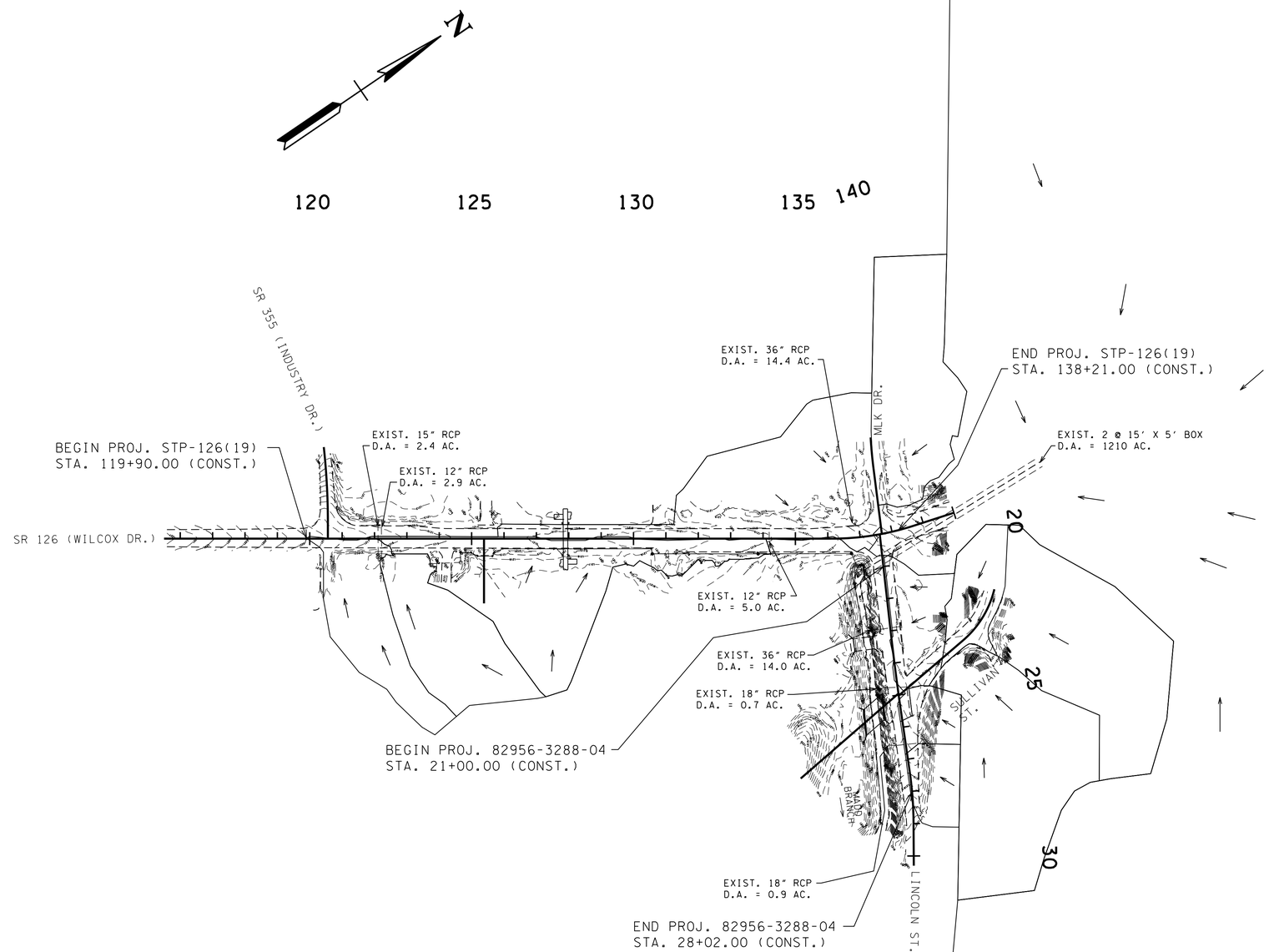

UNOFFICIAL SET

NOT FOR BIDDING

SEALED BY

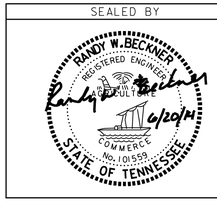

COORDINATES ARE NAD/83(1995), ARE DATUM ADJUSTED BY THE FACTOR OF 1.000030 AND TIED TO THE TGRN. ALL ELEVATIONS ARE REFERENCED TO THE NAVD 1988.

STATE OF TENNESSEE
DEPARTMENT OF TRANSPORTATION

DRAINAGE MAP

SCALE: 1"=200'

6/19/2014 4:09:30 PM
H:\3131G - Sullivan Co Eastman S1A\007_DrainageMap.sht

TYPE	YEAR	PROJECT NO.	SHEET NO.
R.O.W.	2014	82956-2288-04 82085-2236-04	8
CONST.	2014	82956-3288-04 STP-126(19)	8

EROSION PREVENTION AND SEDIMENT CONTROL NOTES

STREAM/WETLAND

(1) ANY WORK WITHIN THE STREAM CHANNEL AREA (E.G., FOR PIER FOOTING, RIP-RAP PLACEMENT, MULTI-BARREL CULVERT/BRIDGE CONSTRUCTION, ETC.) SHALL BE SEPARATED FROM FLOWING WATER OR EXPECTED FLOW PATH AND PERFORMED DURING LOW FLOW CONDITIONS. ALL ITEMS USED WITHIN THE STREAM CHANNEL AREA FOR DIVERSION OF FLOW (OR EXPECTED FLOW), UNLESS SPECIFIED IN THE PLANS, SHALL NOT BE PAID FOR DIRECTLY BUT SHALL BE INCLUDED IN THE COST OF OTHER ITEMS. THIS NOTE EXCLUDES ANY ITEMS SPECIFIED IN THE PLANS FOR THE TEMPORARY DIVERSION CHANNELS, EC-STR-31 AND TEMPORARY DIVERSION CULVERTS, EC-STR-32 FOR SINGLE BARREL CULVERT CONSTRUCTION.

(2) A 30 FOOT NATURAL RIPARIAN BUFFER ZONE ADJACENT TO AND ON BOTH SIDES OF THE RECEIVING STREAM SHALL BE PRESERVED, TO THE MAXIMUM EXTENT PRACTICABLE, DURING CONSTRUCTION ACTIVITIES AT THE SITE. BUFFER ZONES ARE NOT SEDIMENT CONTROL MEASURES AND SHOULD NOT BE RELIED UPON AS PRIMARY SEDIMENT CONTROL MEASURES. THE RIPARIAN BUFFER ZONE SHALL BE ESTABLISHED BETWEEN THE TOP OF THE STREAM BANK AND THE DISTURBED CONSTRUCTION AREA. THE 30 FOOT CRITERION FOR THE WIDTH OF THE BUFFER ZONE CAN BE ESTABLISHED ON AN AVERAGE WIDTH BASIS AT A PROJECT, AS LONG AS THE MINIMUM WIDTH OF THE BUFFER ZONE IS MORE THAN 15 FEET AT ANY MEASURED LOCATION. EVERY ATTEMPT SHALL BE MADE FOR CONSTRUCTION ACTIVITIES NOT TO TAKE PLACE WITHIN THE BUFFER ZONES. BEST MANAGEMENT PRACTICES (BMPS) PROVIDING EQUIVALENT PROTECTION AS THE NATURAL RIPARIAN ZONE MAY BE USED. A JUSTIFICATION FOR USE AND DESIGN EQUIVALENCY SHALL BE DOCUMENTED WITHIN THE SWPPP. THE ENVIRONMENTAL AND ROADWAY DESIGN DIVISIONS SHALL REVIEW AND APPROVE THIS REVISION OF THE SWPPP BEFORE DISTURBANCE OF THE SITE PROCEEDS, UNLESS PREVIOUSLY EXEMPT IN THE NPDES CONSTRUCTION GENERAL PERMIT. WHERE ISSUED, ARAP/401 REQUIREMENTS WILL PREVAIL IF IN CONFLICT WITH THESE BUFFER ZONE REQUIREMENTS.

KNOWN EXCEPTIONAL TENNESSEE WATERS

(3) FOR PROJECTS THAT DISCHARGE INTO KNOWN EXCEPTIONAL TENNESSEE WATERS OR WATERS IMPAIRED BY SILTATION, AN OUTFALL IN A DRAINAGE AREA OF 5 ACRES OR MORE, A TEMPORARY (OR PERMANENT) SEDIMENT BASIN THAT PROVIDES STORAGE FOR A CALCULATED VOLUME OF RUNOFF FROM A 5-YEAR/ 24-HOUR STORM EVENT AND RUNOFF FROM EACH ACRE DRAINED, OR EQUIVALENT CONTROL MEASURES, SHALL BE PROVIDED UNTIL FINAL STABILIZATION OF THE SITE. THE ENVIRONMENTAL AND ROADWAY DESIGN DIVISIONS MAY BE CONTACTED TO REVIEW AND CONCUR WITH ANY REVISION OF THE SWPPP BEFORE DISTURBANCE OF THE OUTFALL PROCEEDS, UNLESS PREVIOUSLY EXEMPT IN THE NPDES CONSTRUCTION GENERAL PERMIT.

(4) FOR PROJECTS THAT DISCHARGE INTO KNOWN EXCEPTIONAL TENNESSEE WATERS OR WATERS IMPAIRED BY SILTATION, A 60 FOOT NATURAL RIPARIAN BUFFER ZONE ADJACENT TO AND ON BOTH SIDES OF THE RECEIVING STREAM WITH THIS DESIGNATION SHALL BE PRESERVED, TO THE MAXIMUM EXTENT PRACTICABLE, DURING CONSTRUCTION ACTIVITIES AT THE SITE. BUFFER ZONES ARE NOT SEDIMENT CONTROL MEASURES AND SHOULD NOT BE RELIED UPON AS PRIMARY SEDIMENT CONTROL MEASURES. THE RIPARIAN BUFFER ZONE SHALL BE ESTABLISHED BETWEEN THE TOP OF THE STREAM BANK AND THE DISTURBED CONSTRUCTION AREA. THE 60 FOOT CRITERION FOR THE WIDTH OF THE BUFFER ZONE CAN BE ESTABLISHED ON AN AVERAGE WIDTH BASIS AT A PROJECT, AS LONG AS THE MINIMUM WIDTH OF THE BUFFER ZONE IS MORE THAN 30 FEET AT ANY MEASURED LOCATION. EVERY ATTEMPT SHALL BE MADE FOR CONSTRUCTION ACTIVITIES NOT TO TAKE PLACE WITHIN THE BUFFER ZONES. BEST MANAGEMENT PRACTICES (BMPS) PROVIDING EQUIVALENT PROTECTION AS THE NATURAL RIPARIAN ZONE MAY BE USED. A JUSTIFICATION FOR USE AND DESIGN EQUIVALENCY SHALL BE DOCUMENTED WITHIN THE SWPPP. THE ENVIRONMENTAL AND ROADWAY DESIGN DIVISIONS SHALL REVIEW AND APPROVE THIS REVISION OF THE SWPPP BEFORE DISTURBANCE OF THE SITE PROCEEDS, UNLESS PREVIOUSLY EXEMPT IN THE NPDES CONSTRUCTION GENERAL PERMIT. WHERE ISSUED, ARAP/401 REQUIREMENTS WILL PREVAIL IF IN CONFLICT WITH THESE BUFFER ZONE REQUIREMENTS.

NPDES

(5) NO WORK SHALL BE STARTED UNTIL THE CONTRACTOR'S PLAN FOR THE STAGING OF THEIR OPERATIONS, INCLUDING THE PLAN FOR STAGING OF TEMPORARY AND PERMANENT EPSC MEASURES, HAS BEEN ACCEPTED BY THE ENGINEER. THE CONTRACTOR'S EPSC PLAN SHALL INCORPORATE AND SUPPLEMENT, AS ACCEPTABLE, THE BASIC EPSC DEVICES ON THE EPSC PLAN CONTAINED IN THE APPROVED SWPPP.

(6) THE EPSC MEASURES AND/OR PLAN SHALL BE MODIFIED AS NECESSARY SO THAT THEY ARE EFFECTIVE AT ALL TIMES THROUGHOUT THE COURSE OF THE PROJECT.

(7) THE ACCEPTED EPSC PLAN SHALL REQUIRE THAT EPSC MEASURES BE IN PLACE BEFORE CLEARING, GRUBBING, EXCAVATION, GRADING, CUTTING OR FILLING OCCURS, EXCEPT AS SUCH WORK MAY BE NECESSARY TO INSTALL EPSC MEASURES, INCLUDING WITHOUT LIMITATION AS FOLLOWS:

A. INITIAL CLEARING AND GRUBBING SHALL BE LIMITED TO THAT NECESSARY FOR THE INSTALLATION OF APPLICABLE EPSC MEASURES IN ACCORDANCE WITH THE ACCEPTED EPSC PLAN INCORPORATED INTO THE SWPPP.

B. NO OTHER CLEARING AND GRUBBING OPERATIONS SHALL BE STARTED BEFORE APPLICABLE EPSC MEASURES ARE IN PLACE IN ACCORDANCE WITH THE ACCEPTED EPSC PLAN INCORPORATED INTO THE SWPPP.

C. NO CULVERT OR BRIDGE CONSTRUCTION SHALL BE STARTED BEFORE APPLICABLE EPSC MEASURES ARE IN PLACE IN ACCORDANCE WITH THE ACCEPTED EPSC PLAN INCORPORATED INTO THE SWPPP.

D. NO GRADING, EXCAVATION, CUTTING, FILLING, OR OTHER EARTHWORK SHALL BE STARTED BEFORE EPSC MEASURES ARE IN PLACE IN ACCORDANCE WITH THE ACCEPTED EPSC PLAN INCORPORATED INTO THE SWPPP.

(8) PERMANENT EPSC MEASURES SHALL BE INITIATED WITHIN 14 CALENDAR DAYS AFTER FINAL GRADING OF ANY SEQUENCE OR PHASE. TEMPORARY OR PERMANENT STABILIZATION SHALL BE INITIATED WITHIN 14 CALENDAR DAYS AFTER FINAL GRADING OR WHEN CONSTRUCTION ACTIVITIES ON A PORTION OF THE SITE ARE TEMPORARILY CEASED AND EARTH DISTURBING ACTIVITIES WILL NOT RESUME UNTIL AFTER 14 CALENDAR DAYS. PERMANENT STABILIZATION WITH PERENNIAL VEGETATION OR OTHER PERMANENTLY STABLE NON-ERODING SURFACE SHALL REPLACE ANY TEMPORARY MEASURES AS SOON AS PRACTICABLE. UNPACKED GRAVEL CONTAINING FINES (SILT AND CLAY SIZED PARTICLES) OR CRUSHER-RUN WILL NOT BE CONSIDERED A NON-ERODIBLE SURFACE.

(9) STEEP SLOPES (A NATURAL OR CREATED SLOPE OF 35% GRADE (2.8H:1V) OR GREATER REGARDLESS OF HEIGHT) SHALL BE TEMPORARILY STABILIZED NO LATER THAN 7 CALENDAR DAYS AFTER CONSTRUCTION ACTIVITY ON THE SLOPE HAS TEMPORARILY OR PERMANENTLY CEASED.

(10) FOR STORMWATER DISCHARGES ASSOCIATED WITH CONSTRUCTION SUPPORT ACTIVITIES; TDOT PROJECTS ARE COVERED UNDER THE "WASTE AND BORROW" MANUAL PER THE SSWMP.

(11) EXCEPT AS OTHERWISE SPECIFIED, THERE ARE NO KNOWN SPECIAL ENVIRONMENTAL FACTORS PRESENT ON THIS PROJECT THAT INDICATE A NEED FOR SEASONAL LIMITATIONS ON THE CLEARING, GRUBBING, EXCAVATION, GRADING, CUTTING OR FILLING OPERATIONS OR ON THE TOTAL AREA OF EXPOSED SOIL.

UTILITY RELOCATION

(12) RAIN WATER WHICH COLLECTS IN THE UTILITY TRENCH SHALL BE PUMPED INTO A DEWATERING STRUCTURE OR SEDIMENT FILTER BAG AND MAINTAINED.

(13) SILT FENCE SHALL BE INSTALLED ON THE DOWNSTREAM SIDE OF STOCKPILED SOIL. TRENCHING ACROSS WET WEATHER CONVEYANCES SHALL BE DONE DURING NO FLOW CONDITIONS AND STABILIZED BY THE END OF THE WORK DAY

(14) UTILITY CROSSINGS FOR PERENNIAL STREAMS SHALL BE CONSTRUCTED IN ACCORDANCE WITH TDOT STANDARDS AND NO WORK SHALL BE CONDUCTED IN FLOWING WATERS. TENNESSEE DEPARTMENT OF ENVIRONMENT AND CONSERVATION (TDEC) REGULATIONS APPLY TO UTILITIES IN THIS PROJECT IN REGARD TO EROSION PREVENTION AND SEDIMENT CONTROL (EPSC). THE STATE CONTRACTOR SHALL COMPLY WITH ALL REQUIREMENTS OF THE STORM WATER POLLUTION PREVENTION PLANS (SWPPP).

(15) IT IS THE RESPONSIBILITY OF THE STATE UTILITY CONTRACTOR INSTALLER TO PROTECT FROM EROSION EXPOSED EARTH RESULTING FROM THEIR OPERATIONS AND TO PROVIDE FOR CONTAINMENT OF SEDIMENT THAT MAY RESULT FROM THEIR WORK. PRIOR TO BEGINNING WORK, ADEQUATE MEASURES MUST BE IN PLACE TO TRAP ANY SEDIMENT THAT MAY TRAVEL OFF-SITE IN THE EVENT OF RAIN. DURING THE PROGRESSION OF THEIR WORK, EXPOSED EARTH AREAS SHALL BE STABILIZED AS SOON AS POSSIBLE TO PREVENT EROSION. AT NO TIME SHALL EXPOSED EARTH RESULTING FROM THEIR OPERATIONS HAVE UNPROTECTED ACCESS TO FLOWING OFF-SITE AND ENTERING WATERS OF THE STATE/U.S.

(16) FOR THE INSTALLATION OF BURIED UTILITIES (PIPES AND CABLES), TRENCHES SHALL BE BACKFILLED DAILY AS CONSTRUCTION PROCEEDS. BACKFILLED TRENCHES SHALL BE SEEDED AND MULCHED OR SODDED DAILY IF POSSIBLE, BUT NO LATER THAN SEVEN DAYS AFTER BEING BACKFILLED. ANY TEMPORARY SPOIL OF EXCAVATED EARTH SHALL BE LOCATED WITHIN TDOT EROSION PREVENTION AND SEDIMENT CONTROL (EPSC) MEASURES OR RECEIVE SEPARATE EPSC MEASURES. IF TRENCHES ARE NOT BACKFILLED OVERNIGHT, APPROPRIATE EPSC MEASURES WILL BE INSTALLED BY THE STATE UTILITY CONTRACTOR UNTIL SUCH TIME AS THE TRENCH IS BACKFILLED.

(17) IN REGARD TO EROSION PREVENTION AND SEDIMENT CONTROL (EPSC), TENNESSEE DEPARTMENT OF ENVIRONMENT AND CONSERVATION (TDEC) REGULATIONS APPLY TO THE STATE UTILITY CONTRACTORS IN THIS PROJECT, THEREFORE, THE STATE CONTRACTOR SHALL COMPLY WITH ALL REQUIREMENTS OF THE STORM WATER POLLUTIONS PREVENTION PLANS (SWPPP). THE STATE CONTRACTOR IS RESPONSIBLE FOR EPSC MEASURES RELATED TO UTILITY CONSTRUCTION INCLUDED IN THE STATE CONTRACT WORK.

(18) TRENCHES FORMED FOR THE INSTALLATION OF BURIED UTILITIES MAY CAUSE STORM WATER RUNOFF TO CONCENTRATE AT THE TRENCH LINE. ADDITIONAL EROSION PREVENTION AND SEDIMENT CONTROL (EPSC) MEASURES MAY BE REQUIRED TO BE INSTALLED AS APPROVED BY THE TDOT PROJECT ENGINEER.

(19) FOR THE INSTALLATION OF UNDERGROUND UTILITIES OUTSIDE OF THE TDOT RIGHT-OF-WAY, EROSION PREVENTION AND SEDIMENT CONTROL (EPSC) SHALL BE INSTALLED PRIOR TO CLEARING (TRENCHING AND ASSOCIATED BLASTING) IN THOSE AREAS NECESSARY TO PREVENT SEDIMENT FROM LEAVING THE CONSTRUCTION AREA. THESE EPSC MEASURES SHALL REMAIN UNTIL THE BACKFILLED TRENCH IS STABILIZED WITH FINAL VEGETATIVE COVER.

(20) THE UTILITY CONTRACTOR SHALL RESTORE ALL AFFECTED WET WEATHER CONVEYANCES TO THE EXISTING TOPOGRAPHIC CONDITIONS (AS APPROVED BY THE TDOT PROJECT ENGINEER).

(21) THE UTILITY CONTRACTOR WILL PROVIDE APPROPRIATE EROSION PREVENTION AND SEDIMENT CONTROL (EPSC) MEASURES TO REPLACE IN-PLACE EPSC MEASURES REMOVED TO FACILITATE THE INSTALLATION OF UTILITIES. REPLACEMENT OF EPSC MEASURES WILL BE COORDINATED WITH THE TDOT PROJECT ENGINEER BEFORE COMMENCING WORK.

UNOFFICIAL SET

NOT FOR BIDDING

SEALED BY

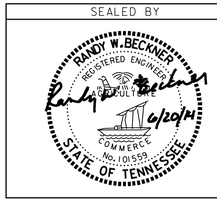

STATE OF TENNESSEE
DEPARTMENT OF TRANSPORTATION

EROSION PREVENTION AND SEDIMENT CONTROL NOTES

6/19/2014 4:09:30 PM
H:\3131G - Sullivan Co Eastman SIA\008_EPSCNotes.sht

TYPE	YEAR	PROJECT NO.	SHEET NO.
R.O.W.	2014	82956-2288-04 82085-2236-04	8A
CONST.	2014	82956-3288-04 STP-126(19)	8A

EROSION PREVENTION AND SEDIMENT CONTROL QUANTITIES

	ITEM NO.	DESCRIPTION	UNIT	QUANTITY 82956-3288-04	QUANTITY 82085-3236-14	QUANTITY TOTAL
1)	203-01	ROAD & DRAINAGE EXCAVATION (UNCLASSIFIED)	C.Y.	0	5	5
1)	209-05	SEDIMENT REMOVAL	C.Y.	25	25	50
	209-08.02	TEPORARY SILT FENCE (WITH BACKING)	L.F.	1000	100	1100
	209-08.03	TEMPORARY SILT FENCE (WITHOUT BACKING)	L.F.	0	1000	1000
	209-09.03	SEDIMENT FILTER BAG (15' X 15')	EACH	1	0	1
	209-09.43	CURB INLET PROTECTION (TYPE 4)	EACH	4	1	5
	209-40.46	CATCH BASIN FILTER ASSEMBLY (TYPE 6)	EACH	1	8	9
	209-40.47	CATCH BASIN FILTER ASSEMBLY (TYPE 7)	EACH	0	2	2
1) 2) 3)	303-10.01	MINERAL AGGREGATE (SIZE 57)	TON	15	37	52
	707-08.11	HIGH-VISIBILITY CONSTRUCTION FENCE	L.F.	400	50	450
4)	709-05.05	MACHINED RIPRAP (CLASS A-3)	TON	340	80	420
1)	709-05.06	MACHINED RIPRAP (CLASS A-1)	TON	0	40	40
1) 2) 3) 4)	740-10.03	GEOTEXTILE (TYPE III) (EROSION CONTROL)	S.Y.	650	200	850
5)	740-11.01	TEMPORARY SEDIMENT TUBE (8 INCH)	L.F.	80	240	320
	801-01.07	TEMPORARY SEEDING (WITH MULCH)	UNIT	6	6	12
	801-03	WATER (SEEDING & SODDING)	M.G.	8	11	19
	803-01	SODDING (NEW SOD)	S.Y.	700	1000	1700

1) TO BE USED AT LOCATIONS OF CULVERT PROTECTION (TYPE 1).
2) TO BE USED AT SEDIMENT FILTER BAG LOCATIONS.
3) TO BE USED AT LOCATIONS OF CULVERT PROTECTION (TYPE 2).
4) TO BE USED FOR TEMPORARY CONSTRUCTION ROADS PER EC-STR-25.
5) TO BE USED AT PROPOSED SIGNAL POLE LOCATIONS AS NEEDED.

EROSION PREVENTION AND SEDIMENT CONTROL LEGEND

SYMBOL	ITEM	STD. DWG.
SFB SFB SFB SFB	SEDIMENT FILTER BAG	EC-STR-2
* SF * SF * SF *	SILT FENCE	EC-STR-3B
* SFB * SFB * SFB *	SILT FENCE WITH WIRE BACKING	EC-STR-3C
	CULVERT PROTECTION (TYPE 1)	EC-STR-11
	CULVERT PROTECTION (TYPE 2)	EC-STR-11A
TCE	TEMPORARY CONSTRUCTION EXIT	EC-STR-25
** TUBE ** TUBE **	SEDIMENT TUBE	EC-STR-37
4	CURB INLET PROTECTION (TYPE 4)	EC-STR-39A
6	CATCH BASIN FILTER ASSEMBLY (TYPE 6)	EC-STR-46
7	CATCH BASIN FILTER ASSEMBLY (TYPE 7)	EC-STR-47
* HVF * HVF	HIGH VISIBILITY FENCE	S-F-1

UNOFFICIAL SET

NOT FOR BIDDING

SEALED BY

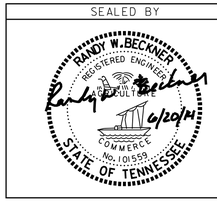

STATE OF TENNESSEE
DEPARTMENT OF TRANSPORTATION

EPSC NOTES AND LEGEND

6/19/2014 4:10:31 PM
H:\3131G - Sullivan Co Eastman SIA\008_EPSCNotes.sht

TYPE	YEAR	PROJECT NO.	SHEET NO.
R.O.W.	2014	82956-2288-04 82085-2236-04	9
CONST.	2014	82956-3288-04 STP-126(19)	9

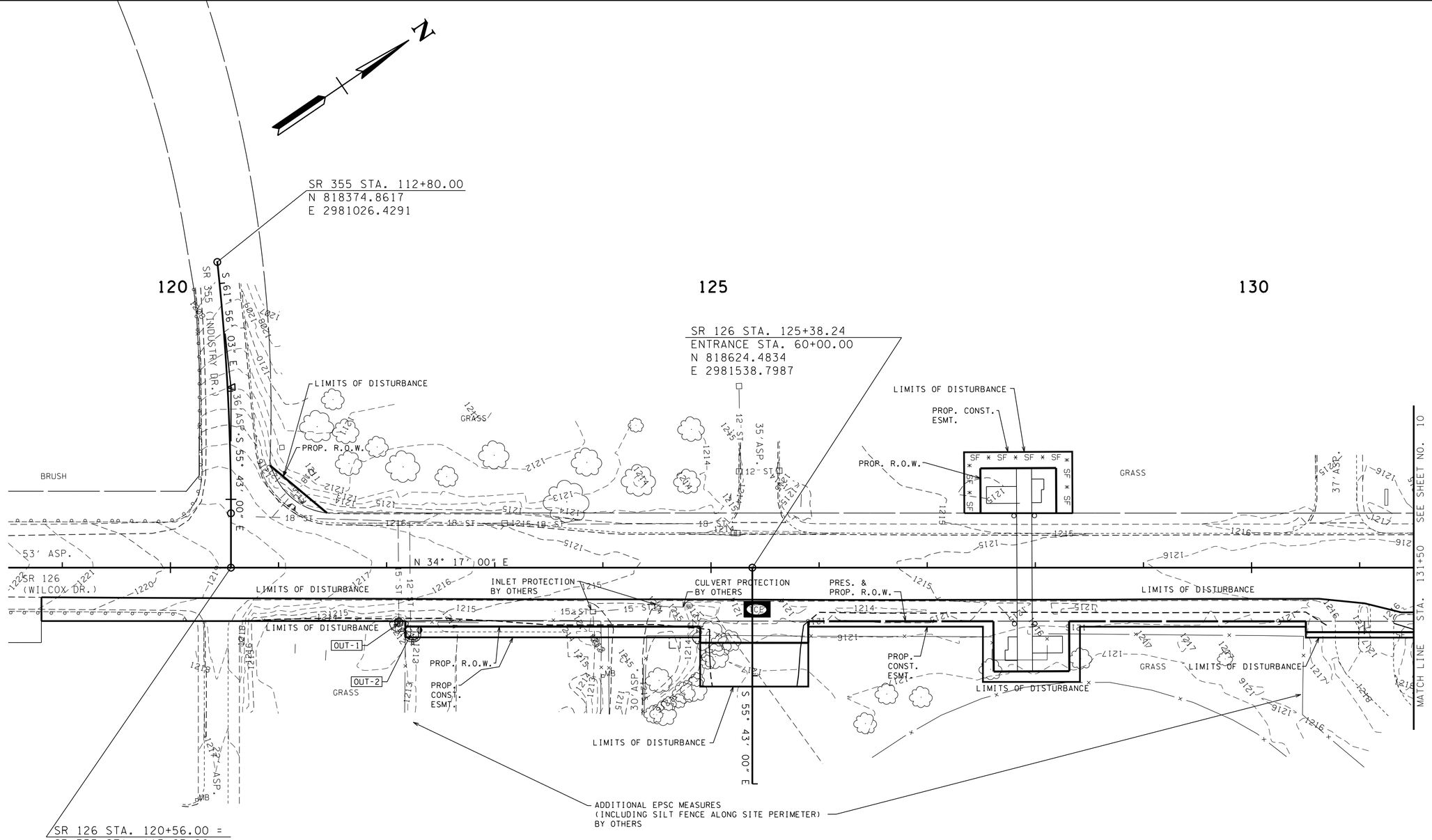

OUTFALL	DRAINAGE AREA
1	2.4 ACRES
2	2.9 ACRES

UNOFFICIAL SET

NOT FOR BIDDING

SEALED BY

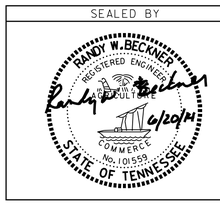

COORDINATES ARE NAD/83(1995), ARE DATUM ADJUSTED BY THE FACTOR OF 1.000030 AND TIED TO THE TGRN. ALL ELEVATIONS ARE REFERENCED TO THE NAVD 1988.

STATE OF TENNESSEE
DEPARTMENT OF TRANSPORTATION

EPSC PLAN STAGE 1

STA.118+50 TO STA.131+50

SCALE: 1"= 50'

6/19/2014 4:10:50 PM
H:+3131G - Sullivan Co Eastman SIA+009_EPSCPhase1-1.sht

TYPE	YEAR	PROJECT NO.	SHEET NO.
R.O.W.	2014	82956-2288-04 82085-2236-04	10
CONST.	2014	82956-3288-04 STP-126(19)	10

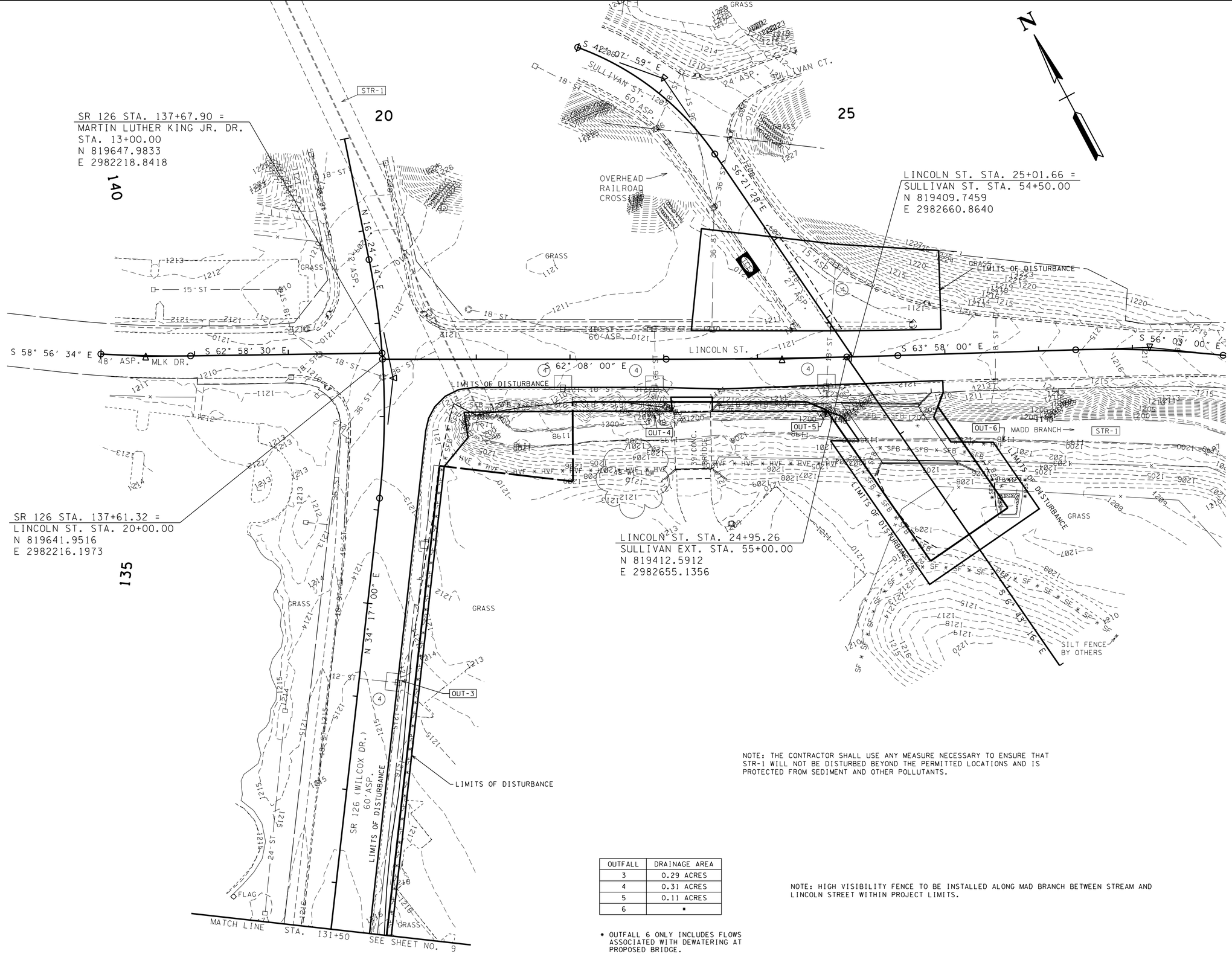

NOTE: THE CONTRACTOR SHALL USE ANY MEASURE NECESSARY TO ENSURE THAT STR-1 WILL NOT BE DISTURBED BEYOND THE PERMITTED LOCATIONS AND IS PROTECTED FROM SEDIMENT AND OTHER POLLUTANTS.

OUTFALL	DRAINAGE AREA
3	0.29 ACRES
4	0.31 ACRES
5	0.11 ACRES
6	*

* OUTFALL 6 ONLY INCLUDES FLOWS ASSOCIATED WITH DEWATERING AT PROPOSED BRIDGE.

NOTE: HIGH VISIBILITY FENCE TO BE INSTALLED ALONG MAD BRANCH BETWEEN STREAM AND LINCOLN STREET WITHIN PROJECT LIMITS.

UNOFFICIAL SET

NOT FOR BIDDING

SEALED BY

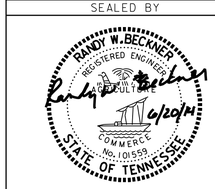

COORDINATES ARE NAD/83(1995), ARE DATUM ADJUSTED BY THE FACTOR OF 1.000030 AND TIED TO THE TGRN. ALL ELEVATIONS ARE REFERENCED TO THE NAVD 1988.

STATE OF TENNESSEE

DEPARTMENT OF TRANSPORTATION

EPSC PLAN STAGE 1

STA.131+50 TO STA.140+00

SCALE: 1"= 50'

6/19/2014 4:10:50 PM

H:\3131G - Sullivan Co Eastman SIA\010_EPSCPhase1-2.sht

TYPE	YEAR	PROJECT NO.	SHEET NO.
R.O.W.	2014	82956-2288-04 82085-2236-04	11
CONST.	2014	82956-3288-04 STP-126(19)	11

OUTFALL	DRAINAGE AREA
1	2.4 ACRES
2	2.9 ACRES

NOTE: ALL DISTURBED SLOPES TO BE SODDED.

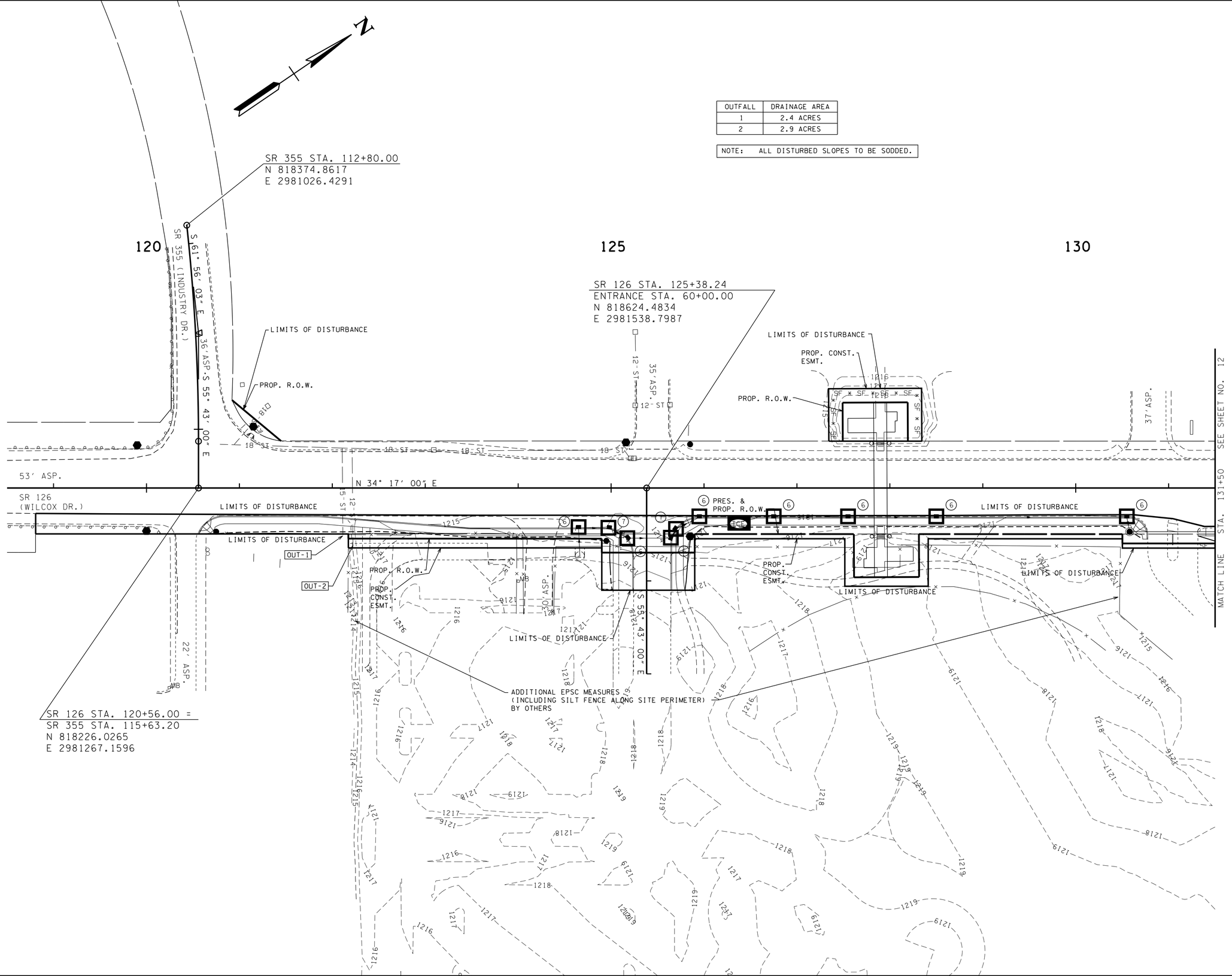

UNOFFICIAL SET

NOT FOR BIDDING

SEALED BY

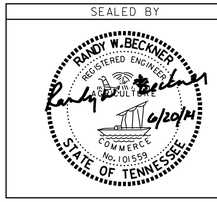

COORDINATES ARE NAD/83(1995), ARE DATUM ADJUSTED BY THE FACTOR OF 1.000030 AND TIED TO THE TGRN. ALL ELEVATIONS ARE REFERENCED TO THE NAVD 1988.

STATE OF TENNESSEE
DEPARTMENT OF TRANSPORTATION

EPSC PLAN STAGE 2

STA.118+50 TO STA.131+50

SCALE: 1"= 50'

6/19/2014 4:10:52 PM
H:\3131G - Sullivan Co Eastman S1A\011_EPSCPhase2-1.sht

TYPE	YEAR	PROJECT NO.	SHEET NO.
R.O.W.	2014	82956-2288-04 82085-2236-04	12
CONST.	2014	82956-3288-04 STP-126(19)	12

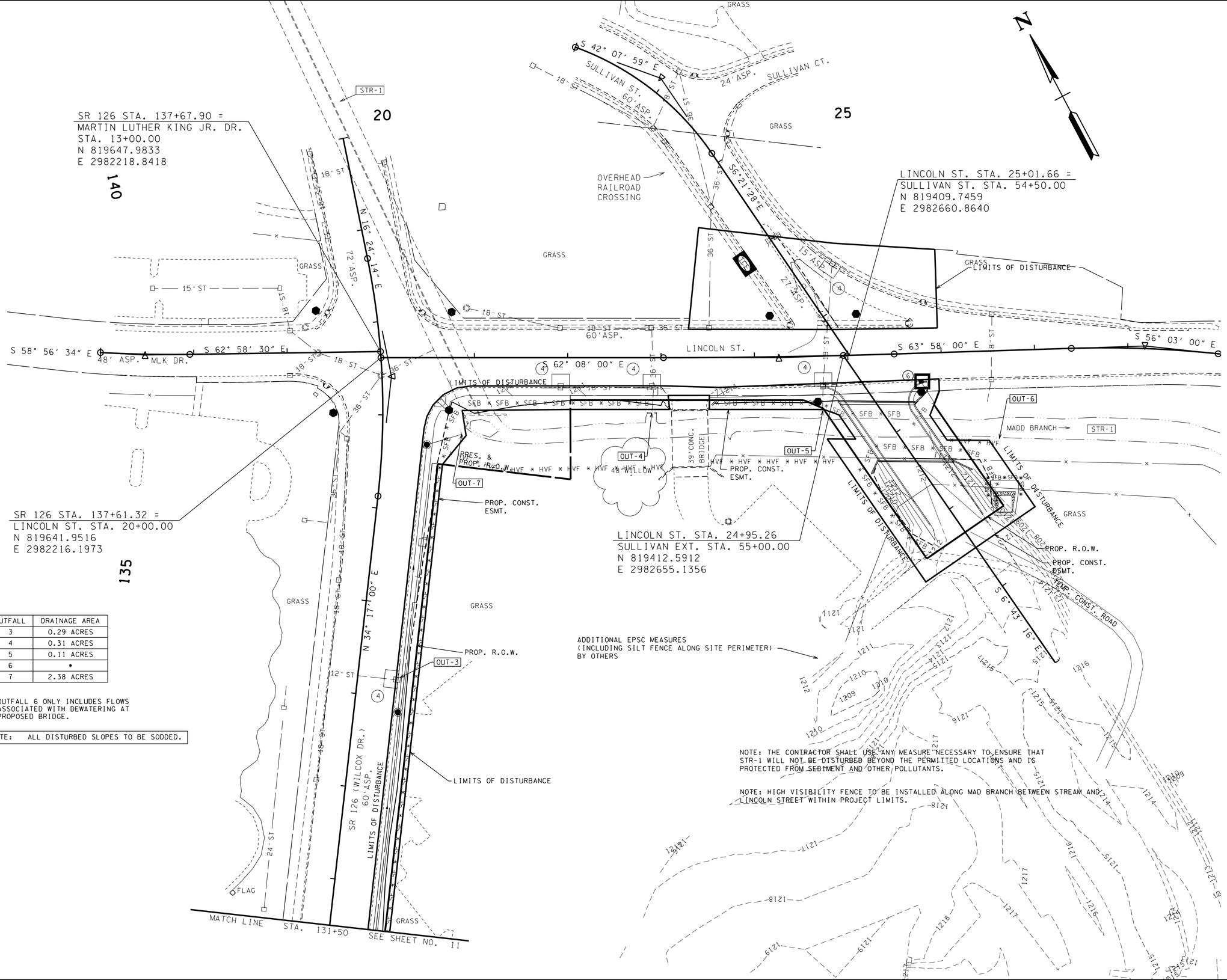

OUTFALL	DRAINAGE AREA
3	0.29 ACRES
4	0.31 ACRES
5	0.11 ACRES
6	*
7	2.38 ACRES

* OUTFALL 6 ONLY INCLUDES FLOWS ASSOCIATED WITH DEWATERING AT PROPOSED BRIDGE.

NOTE: ALL DISTURBED SLOPES TO BE SODDED.

NOTE: THE CONTRACTOR SHALL USE ANY MEASURE NECESSARY TO ENSURE THAT STR-1 WILL NOT BE DISTURBED BEYOND THE PERMITTED LOCATIONS AND IS PROTECTED FROM SEDIMENT AND OTHER POLLUTANTS.

NOTE: HIGH VISIBILITY FENCE TO BE INSTALLED ALONG MAD BRANCH BETWEEN STREAM AND LINCOLN STREET WITHIN PROJECT LIMITS.

UNOFFICIAL SET

NOT FOR BIDDING

SEALED BY

RANDY W. BECKNER REGISTERED ENGINEER No. 101559 STATE OF TENNESSEE 6/20/14

COORDINATES ARE NAD/83(1995), ARE DATUM ADJUSTED BY THE FACTOR OF 1.000030 AND TIED TO THE TGRN. ALL ELEVATIONS ARE REFERENCED TO THE NAVD 1988.

STATE OF TENNESSEE
DEPARTMENT OF TRANSPORTATION

EPSC PLAN STAGE 2

STA.131+50 TO STA.140+00

SCALE: 1"= 50'

6/19/2014 4:10:52 PM
H:\3131G - Sullivan Co Eastman SIA\012_EPSCPhase2-2.sht

TYPE	YEAR	PROJECT NO.	SHEET NO.
R.O.W.	2014	82956-2288-04 82085-2236-04	13
CONST.	2014	82956-3288-04 STP-126(19)	13

PROPOSED SIGNAL LAYOUT & CABLE ROUTING DETAIL

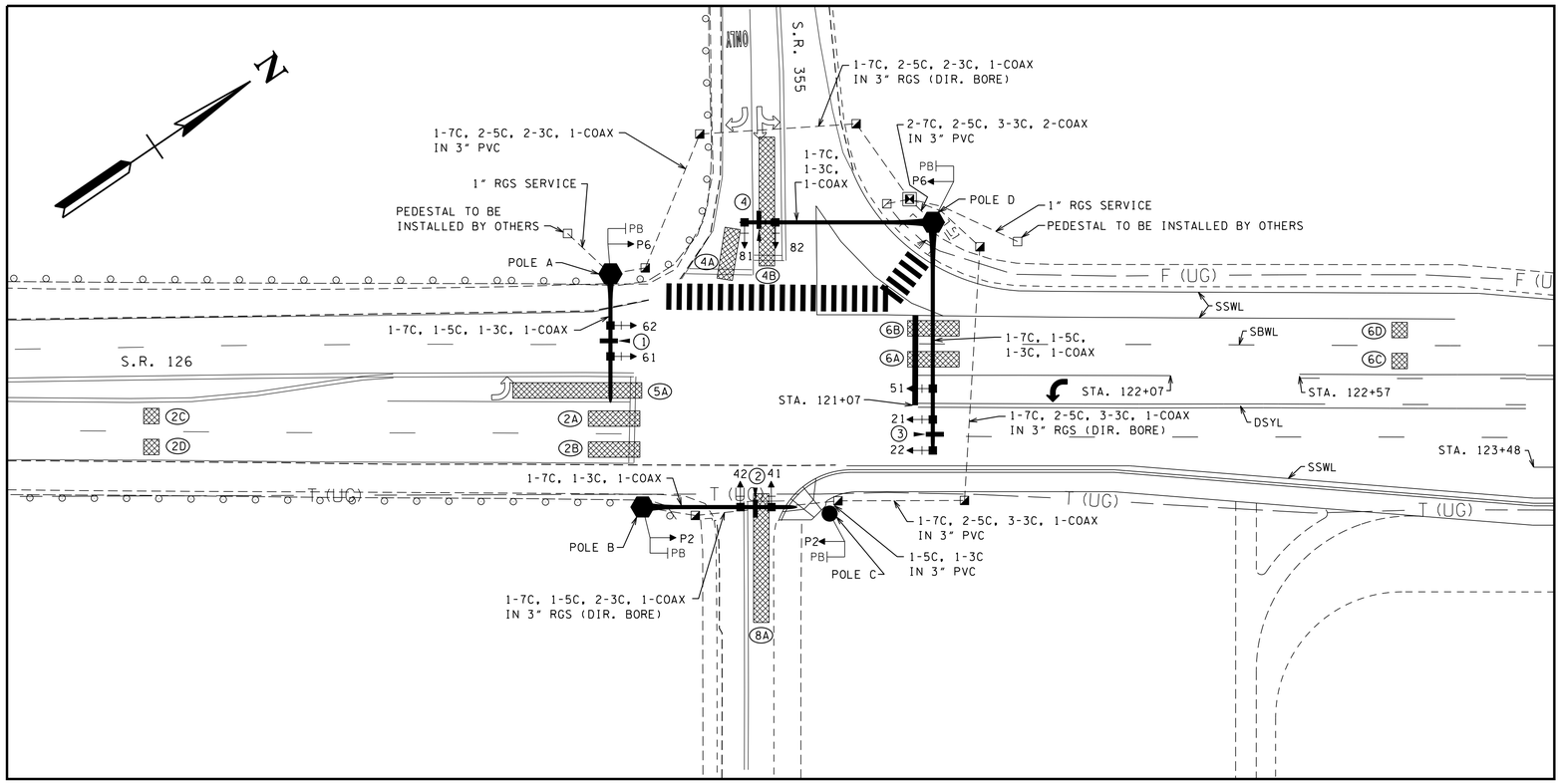

SIGNAL PHASING DIAGRAM

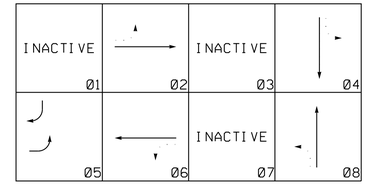

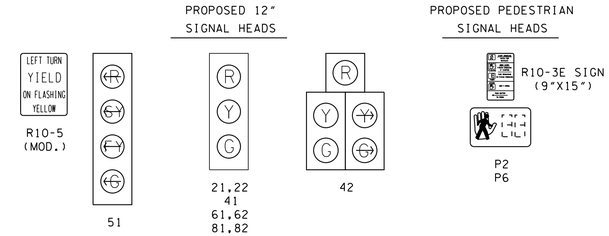

SIGNAL SUPPORT POLE DATA								
POLE	TYPE	NORTHING	EASTING	GRND. ELEV.	MAST ARM LENGTH	HEIGHT	FOOTING DEPTH	FOOTING DIAM.
A	CANTILEVER	818197	2981192	1218.0	50' E-W	45'	15'	3'
B	CANTILEVER	818157	2981274	1218.5	60' N-S	22'	*	*
C	PEDESTAL	818215	2981317	1216.0	-	10'	4'	2'
D	CANTILEVER	818312	2981246	1216.0	75' N-S 90' E-W	22'	15'	3'

* SEE SHEET 2B FOR DETAILS OF FOOTING.

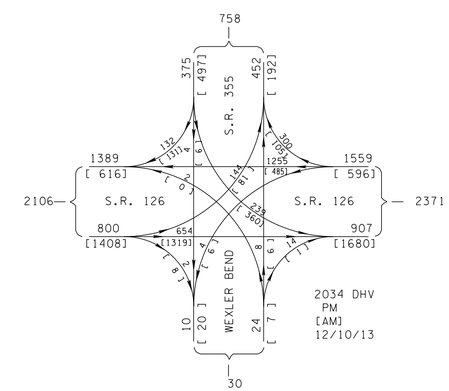

NOTES:

1. LOCATIONS OF SIGNAL POLES AND PULL BOXES ARE APPROXIMATE AND CAN BE ADJUSTED 5' - 10' IN THE FIELD TO AVOID UTILITY CONFLICTS. IF POLES ARE ADJUSTED, CONTRACTOR TO VERIFY MAST ARM LENGTHS ARE SUFFICIENT TO PROVIDE CORRECT LOCATION OF SIGNAL HEADS.
2. ALL VEHICULAR SIGNAL HEAD INDICATIONS PROPOSED FOR THIS PROJECT SHALL CONSIST OF AN LED LIGHT EMITTING DIODE) SIGNAL MODE.
3. ALL SIGNAL DISPLAYS AND CLEARANCES SHALL BE IN ACCORDANCE WITH THE "MANUAL ON UNIFORM TRAFFIC CONTROL DEVICES."
4. MIN RECALL: PHASE 2, PHASE 6.
5. PROGRAM PHASES 4 & 8 FOR DUAL ENTRY.
6. POWER SUPPLY FOR SIGNAL CONTROLLER TO COME FROM PEDESTAL TO BE INSTALLED BY AEP NEAR STA. 121+48, 59' LT VIA UNDERGROUND CONDUIT.
7. OMIT PHASE 5 DURING PHASE 6 ON.
8. EXISTING SIGNAL POLES & EQUIPMENT TO BE REMOVED. ALL SALVAGEABLE EQUIPMENT TO BE RETURNED TO THE CITY OF KINGSPORT.
9. POLE A TO HAVE A 2" DIAMETER, 6" TALL TENON ATTACHED AT THE TOP FOR ATTACHMENT OF STREET LIGHT FIXTURE (LIGHT TO BE INSTALLED BY OTHERS). SERVICE TO COME FROM PEDESTAL TO BE INSTALLED BY AEP NEAR STA. 119+74, 62' LT VIA UNDERGROUND CONDUIT (AEP TO INSTALL CABLE).

BASIC OR FULLY ACTUATED TIMINGS (SECS.)

PHASE	INITIAL INTERVAL	VEHICLE INTERVAL	MAX I	MAX II	CLEARANCE		PEDESTRIAN		RECALL TO	MEMORY POSITION (1)
					YELLOW	ALL RED	WALK	FLASHING DON'T WALK		
2	10	2.5	45	-	4.0	1.5	-	-	MIN.	L
4	6	2.5	15	-	4.0	1.5	-	-	-	L
5	6	2.5	15	-	4.0	1.5	-	-	-	NL
6	10	2.5	45	-	4.0	1.5	7.0	15.0	MIN.	L
8	6	2.5	15	-	4.0	1.5	-	-	-	L

NOTES:

1) NL = NONLOCK, L = LOCK

2) THESE TIMINGS ARE INITIAL AND SHOULD BE ADJUSTED BY THE CONTRACTOR BASED ON FIELD OBSERVATIONS TO PROVIDE EFFICIENT OPERATION. CONTRACTOR SHALL COORDINATE WITH CITY OF KINGSPORT FOR FINAL OPERATION.

VOLUME DENSITY TIMINGS (SECS.)

PHASE	MAX. INITIAL	ADDED INITIAL	INITIAL GAP	TIME BEFORE REDUCTION	TIME TO REDUCE	MIN. GAP
2	18	2.4	3.6	15	15	2.0
6	18	2.4	3.6	15	15	2.0

VIDEO DETECTOR TARGET ASSIGNMENTS

DETECTION AREA NO.	CAMERA NO.	TARGET AREA	ASSOCIATED PHASE	COMMENTS
2A	3	6' X 20'	2	
2B	3	6' X 20'	2	
2C	3	6' X 6'	2	
2D	3	6' X 6'	2	
4A	2	6' X 20'	4	10 SEC. DELAY
4B	2	6' X 50'	4	ENABLE DIR. CAP.
5A	3	6' X 50'	5	
6A	1	6' X 20'	6	
6B	1	6' X 20'	6	
6C	1	6' X 6'	6	
6D	1	6' X 6'	6	
8A	4	6' X 50'	8	10 SEC. DELAY

UNOFFICIAL SET

NOT FOR BIDDING

SEALED BY

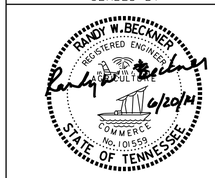

COORDINATES ARE NAD/83(1995), ARE DATUM ADJUSTED BY THE FACTOR OF 1.000030 AND TIED TO THE TORN. ALL ELEVATIONS ARE REFERENCED TO THE NAVD 1988.

STATE OF TENNESSEE
DEPARTMENT OF TRANSPORTATION

PROPOSED SIGNAL LAYOUT & DETAILS

S.R. 126 AT
S.R. 355

SCALE: 1"= 30'

6/20/2014 8:47:50 AM
H:\3131G - Sullivan Co Eastman SIA\013_Signal Layout1.sht

TYPE	YEAR	PROJECT NO.	SHEET NO.
R.O.W.	2014	82956-2288-04 82085-2236-04	14
CONST.	2014	82956-3288-04 STP-126(19)	14

PROPOSED SIGNAL LAYOUT & CABLE ROUTING DETAIL

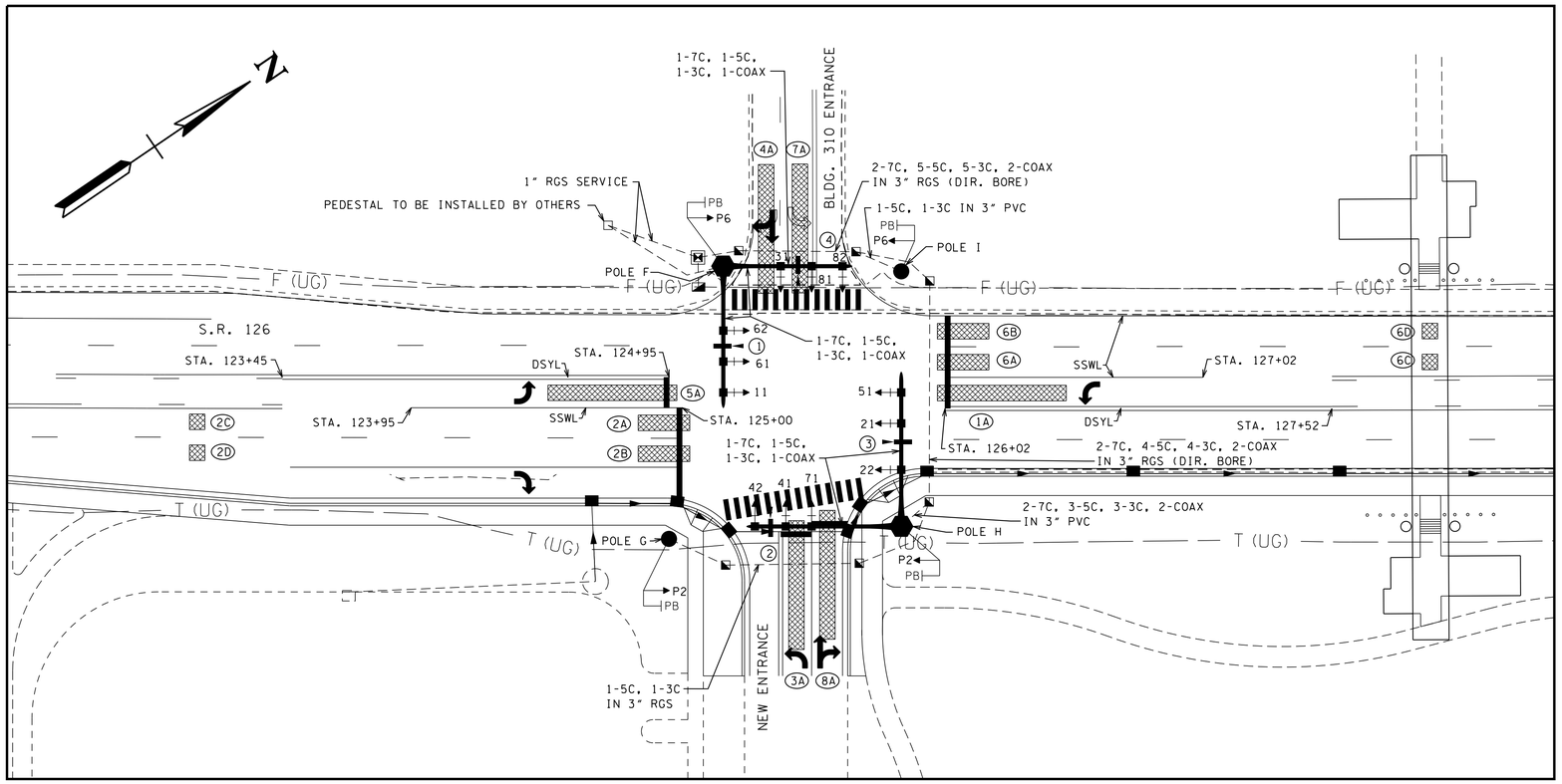

SIGNAL PHASING DIAGRAM

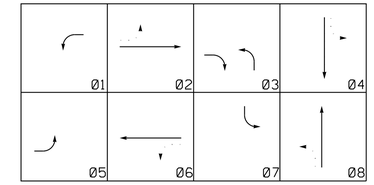

PROPOSED 12" SIGNAL HEADS

PROPOSED PEDESTRIAN SIGNAL HEADS

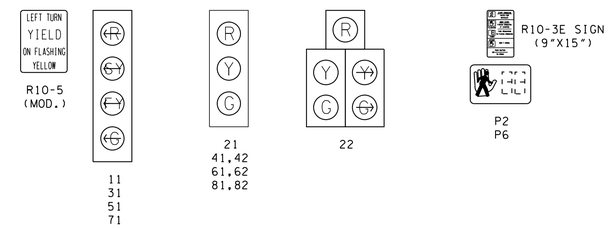

SIGNAL SUPPORT POLE DATA								
POLE	TYPE	NORTHING	EASTING	GRND. ELEV.	MAST ARM LENGTH	HEIGHT	FOOTING DEPTH	FOOTING DIAM.
F	CANTILEVER	818634	2981486	1214.5	55' E-W 50' N-S	45'	15'	3'
G	PEDESTAL	818557	2981561	1215.5	-	10'	4'	2'
H	CANTILEVER	818634	2981608	1215.0	60' E-W 60' N-S	22'	15'	3'
I	PEDESTAL	818690	2981526	1215.0	-	10'	4'	2'

NOTES:

1. LOCATIONS OF SIGNAL POLES AND PULL BOXES ARE APPROXIMATE AND CAN BE ADJUSTED 5' - 10' IN THE FIELD TO AVOID UTILITY CONFLICTS. IF POLES ARE ADJUSTED, CONTRACTOR TO VERIFY MAST ARM LENGTHS ARE SUFFICIENT TO PROVIDE CORRECT LOCATION OF SIGNAL HEADS.
2. ALL VEHICULAR SIGNAL HEAD INDICATIONS PROPOSED FOR THIS PROJECT SHALL CONSIST OF AN LED (LIGHT EMITTING DIODE) SIGNAL MODE.
3. ALL SIGNAL DISPLAYS AND CLEARANCES SHALL BE IN ACCORDANCE WITH THE "MANUAL ON UNIFORM TRAFFIC CONTROL DEVICES."
4. MIN RECALL: PHASE 2, PHASE 6.
5. PROGRAM PHASES 4 & 8 FOR DUAL ENTRY.
6. POWER SUPPLY FOR SIGNAL CONTROLLER TO COME FROM PEDESTAL TO BE INSTALLED BY AEP NEAR STA. 124+71, 65' LT VIA UNDERGROUND CONDUIT.
7. OMIT PHASE 1 DURING PHASE 2 ON, OMIT PHASE 3 DURING PHASE 4 ON, OMIT PHASE 5 DURING PHASE 6 ON, OMIT PHASE 7 DURING PHASE 8 ON.
8. POLE F TO HAVE A 2" DIAMETER, 6" TALL TENON ATTACHED AT THE TOP FOR ATTACHMENT OF STREET LIGHT FIXTURE (LIGHT TO BE INSTALLED BY OTHERS). SERVICE TO COME FROM PEDESTAL TO BE INSTALLED BY AEP NEAR STA. 124+71, 65' LT VIA UNDERGROUND CONDUIT (AEP TO INSTALL CABLE).

BASIC OR FULLY ACTUATED TIMINGS (SECS.)

PHASE	INITIAL INTERVAL	VEHICLE INTERVAL	MAX I	MAX II	CLEARANCE		PEDESTRIAN		RECALL TO	MEMORY POSITION (1)
					YELLOW	ALL RED	WALK	FLASHING DON'T WALK		
1	6	2.5	15	-	4.0	2.0	-	-	-	NL
2	10	2.5	45	-	4.0	1.5	7.0	15.0	MIN.	L
3	6	2.5	20	-	4.0	2.0	-	-	-	NL
4	6	2.5	15	-	4.0	1.5	-	-	-	L
5	6	2.5	15	-	4.0	2.0	-	-	-	NL
6	10	2.5	45	-	4.0	1.5	7.0	15.0	MIN.	L
7	6	2.5	15	-	4.0	2.0	-	-	-	NL
8	6	2.5	15	-	4.0	1.5	-	-	-	L

NOTES:

1) NL = NONLOCK, L = LOCK

2) THESE TIMINGS ARE INITIAL AND SHOULD BE ADJUSTED BY THE CONTRACTOR BASED ON FIELD OBSERVATIONS TO PROVIDE EFFICIENT OPERATION. CONTRACTOR SHALL COORDINATE WITH CITY OF KINGSPORT FOR FINAL OPERATION.

VOLUME DENSITY TIMINGS (SECS.)

PHASE	MAX. INITIAL	ADDED INITIAL	INITIAL GAP	TIME BEFORE REDUCTION	TIME TO REDUCE	MIN. GAP
2	18	2.4	3.6	15	15	2.0
6	18	2.4	3.6	15	15	2.0

VIDEO DETECTOR TARGET ASSIGNMENTS

DETECTION AREA NO.	CAMERA NO.	TARGET AREA	ASSOCIATED PHASE	COMMENTS
1A	1	6' X 50'	1	
2A	3	6' X 20'	2	
2B	3	6' X 20'	2	
2C	3	6' X 6'	2	
2D	3	6' X 6'	2	
3A	4	6' X 50'	3	
4A	2	6' X 50'	4	10 SEC. DELAY
5A	3	6' X 50'	5	
6A	1	6' X 20'	6	
6B	1	6' X 20'	6	
6C	1	6' X 6'	6	
6D	1	6' X 6'	6	
7A	2	6' X 50'	7	
8A	4	6' X 50'	8	10 SEC. DELAY

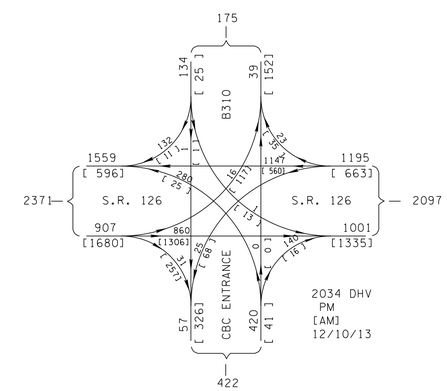

UNOFFICIAL SET

NOT FOR BIDDING

SEALED BY

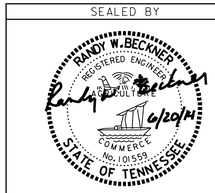

COORDINATES ARE NAD/83(1995), ARE DATUM ADJUSTED BY THE FACTOR OF 1.000030 AND TIED TO THE TORN. ALL ELEVATIONS ARE REFERENCED TO THE NAVD 1988.

STATE OF TENNESSEE

DEPARTMENT OF TRANSPORTATION

PROPOSED SIGNAL LAYOUT & DETAILS

S.R. 126 AT
WILCOX ENTRANCE

SCALE: 1"= 30'

6/19/2014 4:11:02 PM
H:\3131G - Sullivan Co Eastman SIA\014_Signal Layout2.sht

TYPE	YEAR	PROJECT NO.	SHEET NO.
R.O.W.	2014	82956-2288-04 82085-2236-04	15
CONST.	2014	82956-3288-04 STP-126(19)	15

PROPOSED SIGNAL LAYOUT & CABLE ROUTING DETAIL

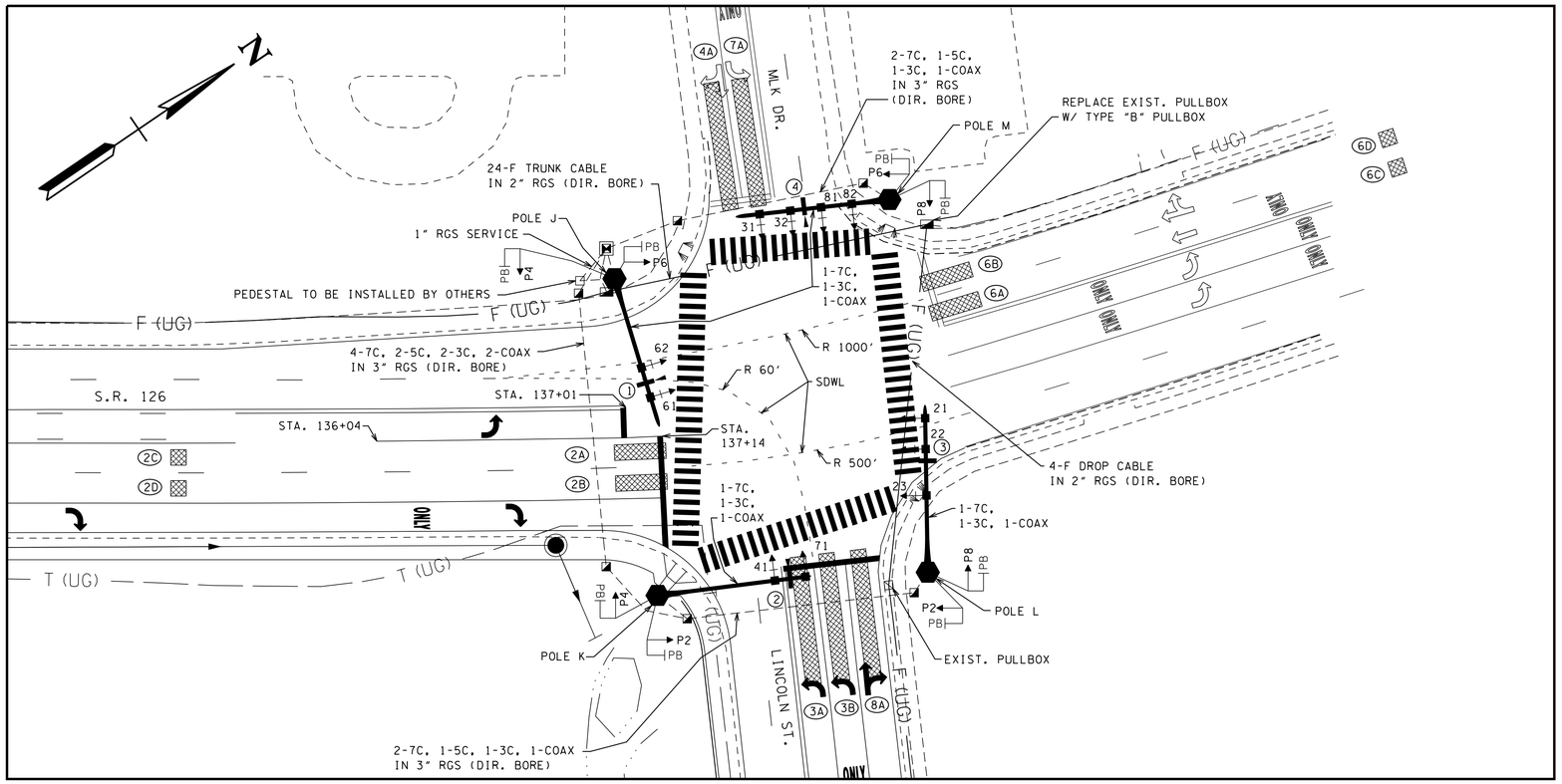

SIGNAL PHASING DIAGRAM

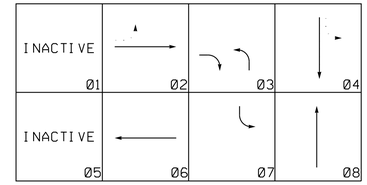

PROPOSED 12" SIGNAL HEADS

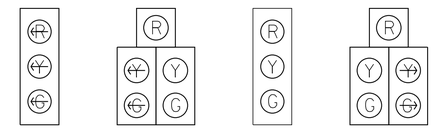

31,32 | 71 | 21,22 41 61,62 81,82 | 23

PROPOSED PEDESTRIAN SIGNAL HEADS

R10-3E SIGN (9"X15")

P2
P4
P6
P8

NOTES:

1. LOCATIONS OF SIGNAL POLES AND PULL BOXES ARE APPROXIMATE AND CAN BE ADJUSTED 5' - 10' IN THE FIELD TO AVOID UTILITY CONFLICTS. IF POLES ARE ADJUSTED, CONTRACTOR TO VERIFY MAST ARM LENGTHS ARE SUFFICIENT TO PROVIDE CORRECT LOCATION OF SIGNAL HEADS.
2. ALL VEHICULAR SIGNAL HEAD INDICATIONS PROPOSED FOR THIS PROJECT SHALL CONSIST OF AN LED (LIGHT EMITTING DIODE) SIGNAL MODE.
3. ALL SIGNAL DISPLAYS AND CLEARANCES SHALL BE IN ACCORDANCE WITH THE "MANUAL ON UNIFORM TRAFFIC CONTROL DEVICES."
4. MIN RECALL: PHASE 2, PHASE 6.
5. PROGRAM PHASES 4 & 8 FOR DUAL ENTRY.
6. POWER SUPPLY FOR SIGNAL CONTROLLER TO COME FROM PEDESTAL TO BE INSTALLED BY AEP NEAR STA. 136+88, 54' LT VIA UNDERGROUND CONDUIT.
7. OMIT PHASE 3 DURING PHASE 4 ON, OMIT PHASE 7 DURING PHASE 8 ON.
8. EXISTING SIGNAL POLES & EQUIPMENT TO BE REMOVED. ALL SALVAGEABLE EQUIPMENT TO BE RETURNED TO THE CITY OF KINGSPORT.
9. POLE J TO HAVE A 2" DIAMETER, 6" TALL TENON ATTACHED AT THE TOP FOR ATTACHMENT OF STREET LIGHT FIXTURE (LIGHT TO BE INSTALLED BY OTHERS). SERVICE TO COME FROM PEDESTAL TO BE INSTALLED BY AEP NEAR STA. 136+88, 54' LT VIA UNDERGROUND CONDUIT (AEP TO INSTALL CABLE).

SIGNAL SUPPORT POLE DATA

POLE	TYPE	NORTHING	EASTING	GRND. ELEV.	MAST ARM LENGTH	HEIGHT	FOOTING DEPTH	FOOTING DIAM.
J	CANTILEVER	819614	2982143	1212.0	60' E-W	45'	15'	3'
K	CANTILEVER	819558	2982254	1210.0	60' N-S	22'	15'	3'
L	CANTILEVER	819650	2982306	1212.0	65' E-W	22'	15'	3'
M	CANTILEVER	819719	2982178	1210.0	60' N-S	22'	15'	3'

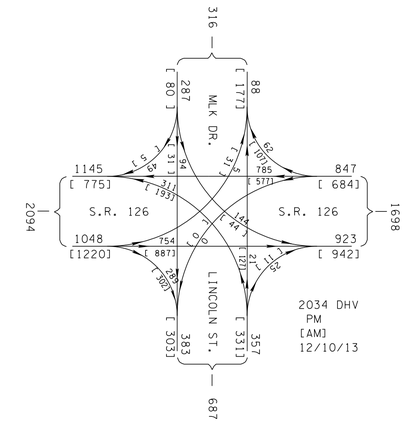

BASIC OR FULLY ACTUATED TIMINGS (SECS.)

PHASE	INITIAL INTERVAL	VEHICLE INTERVAL	MAX I	MAX II	CLEARANCE		PEDESTRIAN		RECALL TO	MEMORY POSITION (1)
					YELLOW	ALL RED	WALK	FLASHING DON'T WALK		
2	10	2.5	45	-	4.0	1.5	7.0	20.0	MIN.	L
3	6	2.5	25	-	4.0	2.0	-	-	-	L
4	6	2.5	15	-	4.0	2.0	7.0	27.5	-	L
6	10	2.5	45	-	4.0	1.5	7.0	20.0	MIN.	L
7	6	2.5	15	-	4.0	2.0	-	-	-	NL
8	6	2.5	15	-	4.0	2.0	7.0	25.0	-	L

NOTES:

1) NL = NONLOCK, L = LOCK

2) THESE TIMINGS ARE INITIAL AND SHOULD BE ADJUSTED BY THE CONTRACTOR BASED ON FIELD OBSERVATIONS TO PROVIDE EFFICIENT OPERATION. CONTRACTOR SHALL COORDINATE WITH CITY OF KINGSPORT FOR FINAL OPERATION.

VOLUME DENSITY TIMINGS (SECS.)

PHASE	MAX. INITIAL	ADDED INITIAL	INITIAL GAP	TIME BEFORE REDUCTION	TIME TO REDUCE	MIN. GAP
2	18	2.4	3.6	15	15	2.0
6	18	2.4	3.6	15	15	2.0

VIDEO DETECTOR TARGET ASSIGNMENTS

DETECTION AREA NO.	CAMERA NO.	TARGET AREA	ASSOCIATED PHASE	COMMENTS
2A	3	6' X 20'	2	
2B	3	6' X 20'	2	
2C	3	6' X 6'	2	
2D	3	6' X 6'	2	
3A	4	6' X 50'	3	ENABLE DIR. CAP.
3B	4	6' X 50'	3	
4A	2	6' X 50'	4	10 SEC. DELAY
6A	1	6' X 20'	6	
6B	1	6' X 20'	6	
6C	1	6' X 6'	6	
6D	1	6' X 6'	6	
7A	2	6' X 50'	7	
8A	4	6' X 50'	8	10 SEC. DELAY

UNOFFICIAL SET

NOT FOR BIDDING

SEALED BY

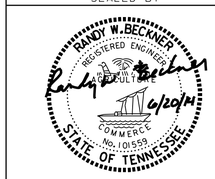

COORDINATES ARE NAD/83(1995), ARE DATUM ADJUSTED BY THE FACTOR OF 1.000030 AND TIED TO THE TORN. ALL ELEVATIONS ARE REFERENCED TO THE NAVD 1988.

STATE OF TENNESSEE
DEPARTMENT OF TRANSPORTATION

PROPOSED SIGNAL LAYOUT & DETAILS

S.R. 126 AT LINCOLN ST.

SCALE: 1"= 30'

6/19/2014 4:11:11 PM
H:\3131G - Sullivan Co Eastman SIA\015_Signal Layout3.sht

TYPE	YEAR	PROJECT NO.	SHEET NO.
R.O.W.	2014	82956-2288-04 82085-2236-04	16
CONST.	2014	82956-3288-04 STP-126(19)	16

PROPOSED SIGNAL LAYOUT & CABLE ROUTING DETAIL

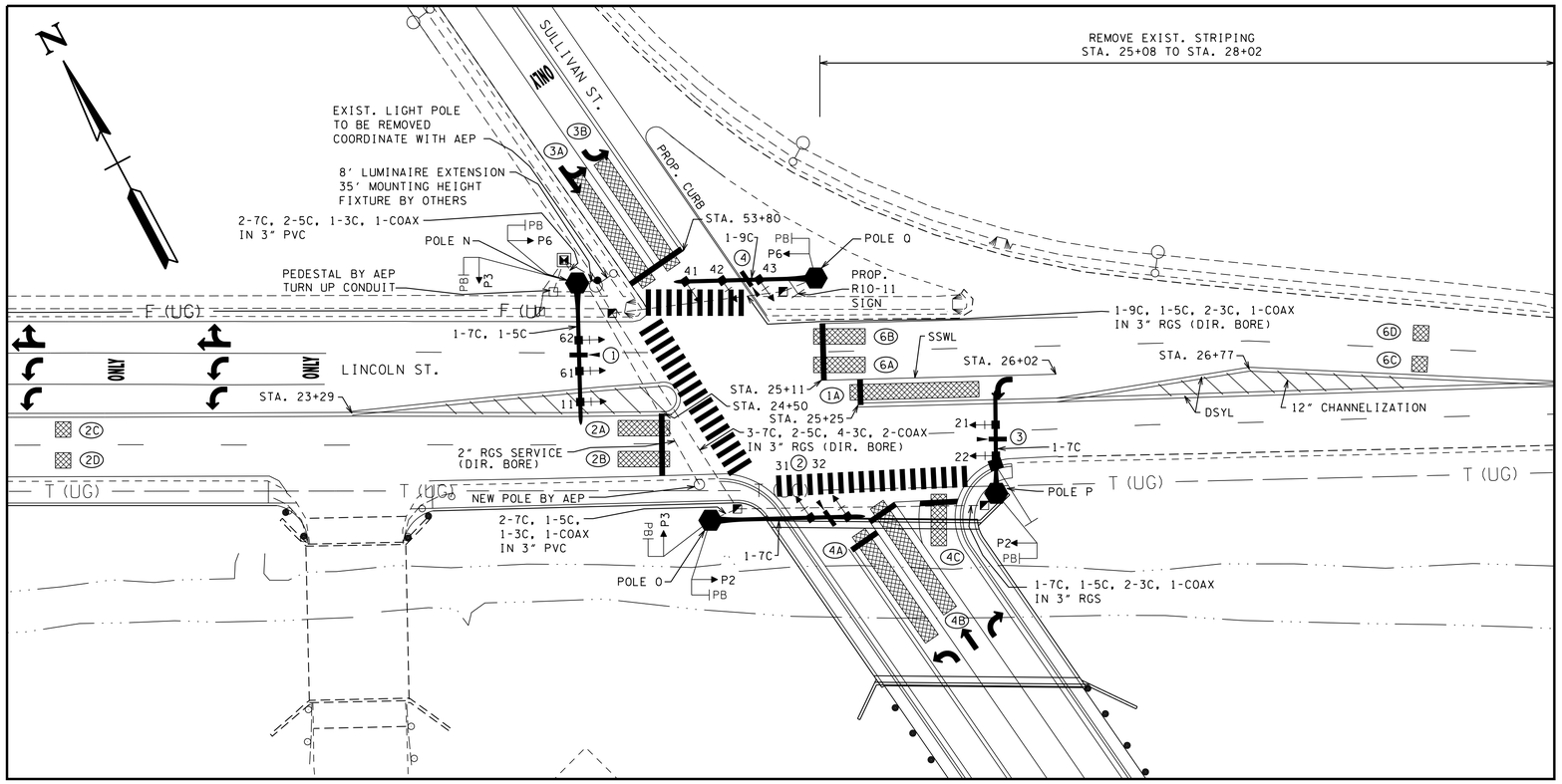

SIGNAL PHASING DIAGRAM

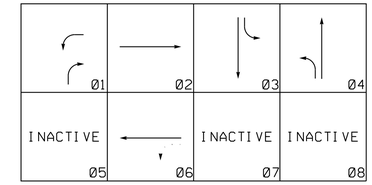

PROPOSED 12" SIGNAL HEADS

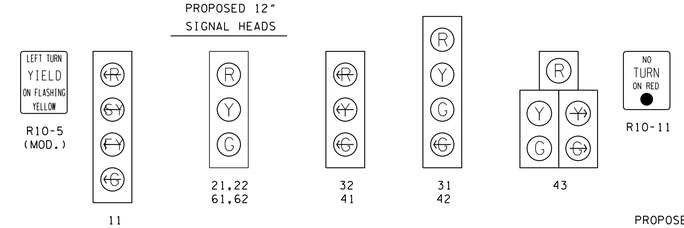

PROPOSED PEDESTRIAN SIGNAL HEADS

SIGNAL SUPPORT POLE DATA								
POLE	TYPE	NORTHING	EASTING	GRND. ELEV.	MAST ARM LENGTH	HEIGHT	FOOTING DEPTH	FOOTING DIAM.
N	CANTILEVER	819487	2982605	1211.0	55' N-S	38'	15'	3'
O	CANTILEVER	819381	2982608	1209.0	60' E-W	22'	15'	3'
P	CANTILEVER	819339	2982711	1212.5	40' N-S	22'	15'	3'
Q	CANTILEVER	819445	2982688	1212.0	55' E-W	22'	15'	3'

NOTES:

1. LOCATIONS OF SIGNAL POLES AND PULL BOXES ARE APPROXIMATE AND CAN BE ADJUSTED 5' - 10' IN THE FIELD TO AVOID UTILITY CONFLICTS. IF POLES ARE ADJUSTED, CONTRACTOR TO VERIFY MAST ARM LENGTHS ARE SUFFICIENT TO PROVIDE CORRECT LOCATION OF SIGNAL HEADS.
2. ALL VEHICULAR SIGNAL HEAD INDICATIONS PROPOSED FOR THIS PROJECT SHALL CONSIST OF AN LED (LIGHT EMITTING DIODE) SIGNAL MODE.
3. ALL SIGNAL DISPLAYS AND CLEARANCES SHALL BE IN ACCORDANCE WITH THE "MANUAL ON UNIFORM TRAFFIC CONTROL DEVICES."
4. MIN RECALL: PHASE 2, PHASE 6.
5. PROGRAM PHASES 3 & 4 FOR DUAL ENTRY.
6. POWER SUPPLY FOR SIGNAL CONTROLLER TO COME FROM NEW POLE TO BE INSTALLED BY AEP NEAR STA. 24+63, 35' RT VIA UNDERGROUND CONDUIT. CONTRACTOR TO INSTALL CONDUIT ACROSS LINCOLN STREET FROM THIS POLE TO THE PEDESTAL LOCATION SHOWN ABOVE. AEP WILL INSTALL PEDESTAL AND PULL CABLE FROM POLE TO PEDESTAL.
7. OMIT PHASE 1 DURING PHASE 2 ON, OMIT PHASE 3 DURING PHASE 4 ON.
8. EXISTING SIGNAL POLES & EQUIPMENT TO BE REMOVED. ALL SALVAGEABLE EQUIPMENT TO BE RETURNED TO THE CITY OF KINGSPORT.

BASIC OR FULLY ACTUATED TIMINGS (SECS.)

PHASE	INITIAL INTERVAL	VEHICLE INTERVAL	MAX I	MAX II	CLEARANCE		PEDESTRIAN		RECALL TO	MEMORY POSITION (1)
					YELLOW	ALL RED	WALK	FLASHING DON'T WALK		
1	6	2.5	15	-	4.0	1.5	-	-	-	NL
2	10	2.5	40	-	4.5	1.5	7.0	20.0	MIN.	L
3	6	2.5	20	-	4.0	2.0	7.0	20.0	-	L
4	6	2.5	20	-	4.0	2.0	-	-	-	L
6	10	2.5	40	-	4.5	1.5	7.0	12.5	MIN.	L

NOTES:

1) NL = NONLOCK, L = LOCK

2) THESE TIMINGS ARE INITIAL AND SHOULD BE ADJUSTED BY THE CONTRACTOR BASED ON FIELD OBSERVATIONS TO PROVIDE EFFICIENT OPERATION. CONTRACTOR SHALL COORDINATE WITH CITY OF KINGSPORT FOR FINAL OPERATION.

VOLUME DENSITY TIMINGS (SECS.)

PHASE	MAX. INITIAL	ADDED INITIAL	INITIAL GAP	TIME BEFORE REDUCTION	TIME TO REDUCE	MIN. GAP
2	21	2.3	3.9	13	13	2.0
6	21	2.3	3.9	13	13	2.0

VIDEO DETECTOR TARGET ASSIGNMENTS

DETECTION AREA NO.	CAMERA NO.	TARGET AREA	ASSOCIATED PHASE	COMMENTS
1A	1	6' X 50'	1	
2A	3	6' X 20'	2	
2B	3	6' X 20'	2	
2C	3	6' X 6'	2	
2D	3	6' X 6'	2	
3A	2	6' X 50'	3	
3B	2	6' X 50'	3	ENABLE DIR. CAP.
4A	4	6' X 50'	4	ENABLE DIR. CAP.
4B	4	6' X 50'	4	ENABLE DIR. CAP.
4C	4	6' X 20'	4	10 SEC. DELAY
6A	1	6' X 20'	6	
6B	1	6' X 20'	6	
6C	1	6' X 6'	6	
6D	1	6' X 6'	6	

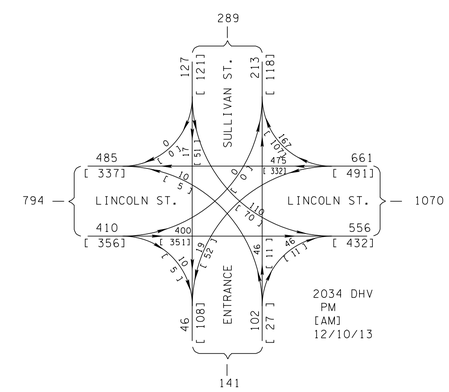

UNOFFICIAL SET

NOT FOR BIDDING

SEALED BY

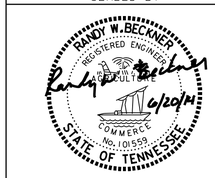

COORDINATES ARE NAD/83(1995), ARE DATUM ADJUSTED BY THE FACTOR OF 1.000030 AND TIED TO THE TORN. ALL ELEVATIONS ARE REFERENCED TO THE NAVD 1988.

STATE OF TENNESSEE
DEPARTMENT OF TRANSPORTATION

PROPOSED SIGNAL LAYOUT & DETAILS

LINCOLN ST. AT SULLIVAN ST.

SCALE: 1"= 30'

6/19/2014 4:11:20 PM
H:\3131G - Sullivan Co Eastman SIA\016_Signal Layout4.sht

TYPE	YEAR	PROJECT NO.	SHEET NO.
CONST.	2014	82956-3288-04 STP-126(19)	17

PAVEMENT EDGE DROP-OFF TRAFFIC CONTROL NOTES

A. DIFFERENCES IN ELEVATION BETWEEN ADJACENT TRAFFIC LANES OR TRAFFIC LANE AND SHOULDER WHERE THE TRAFFIC LANE IS BEING USED BY TRAFFIC, CAUSED BY BASE, PAVING OR RESURFACING:

1. DIFFERENCES IN ELEVATION BETWEEN ADJACENT ROADWAY ELEMENTS GREATER THAN 0.75 INCH AND NOT EXCEEDING 2 INCHES:

a. WARNING SIGNS, UNEVEN LANES (W8-11) AND/OR SHOULDER DROP-OFF WITH PLAQUE (W8-17 AND W8-17P), SHALL BE PLACED IN ADVANCE OF AND THROUGHOUT THE EXPOSED AREA. MAXIMUM SPACING BETWEEN SIGNS SHALL BE 2,000 FEET WITH A MINIMUM OF 2 SIGNS PER EXPOSED AREA. WHERE UNEVEN PAVEMENT IS ENCOUNTERED, SIGNS SHALL BE PLACED ON EACH SIDE OF THE ROADWAY.

b. DIFFERENCES IN ELEVATION BETWEEN ADJACENT TRAFFIC LANES BEING UTILIZED BY TRAFFIC CAUSED BY ADDED PAVEMENT SHALL BE ELIMINATED WITHIN THREE WORKDAYS.

c. DIFFERENCES IN ELEVATION BETWEEN ADJACENT TRAFFIC LANES BEING UTILIZED BY TRAFFIC CAUSED BY COLD PLANING SHALL BE ELIMINATED WITHIN THREE WORKDAYS.

d. WHEN THE DIFFERENCE IN ELEVATION IS BETWEEN THE TRAFFIC LANE BEING UTILIZED BY TRAFFIC AND SHOULDER THE DIFFERENCE IN ELEVATION SHALL BE ELIMINATED WITHIN SEVEN WORKDAYS AFTER THE CONDITION IS CREATED.

2. DIFFERENCES IN ELEVATION BETWEEN ADJACENT ROADWAY ELEMENTS GREATER THAN 2 INCHES AND NOT EXCEEDING 6 INCHES. TRAFFIC IS NOT TO BE ALLOWED TO TRAVERSE THIS DIFFERENCE IN ELEVATION.

a. SEPARATION SHALL BE ACCOMPLISHED BY DRUMS, BARRICADES OR OTHER APPROVED DEVICES IN ACCORDANCE WITH THE FOLLOWING:

(1) WHERE POSTED SPEEDS ARE 50 MPH OR GREATER, SPACING OF THE PROTECTIVE DEVICES SHALL NOT EXCEED 100 FEET.

(2) WHERE POSTED SPEEDS ARE LESS THAN 50 MPH, THE MAXIMUM SPACING OF THE PROTECTIVE DEVICES IN FEET SHALL NOT EXCEED TWICE THE POSTED SPEED IN MILES PER HOUR OR 50 FEET, WHICHEVER SPACING IS GREATER.

b. IF THE DIFFERENCE IN ELEVATION IS ELIMINATED OR DECREASED TO 2 INCHES OR LESS BY THE END OF EACH WORKDAY, CONES MAY BE USED DURING DAYLIGHT HOURS IN LIEU OF DRUMS, BARRICADES OR OTHER APPROVED PROTECTIVE DEVICES MENTIONED IN PARAGRAPH a, PROVIDED WARNING SIGNS ARE ERECTED. WARNING SIGNS (UNEVEN LANES AND/OR SHOULDER DROP-OFF) SHALL BE PLACED IN ADVANCE OF AND THROUGHOUT THE EXPOSED AREA. MAXIMUM SPACING BETWEEN SIGNS SHALL BE 2,000 FEET WITH A MINIMUM OF 2 SIGNS PER EXPOSED AREA. WHERE UNEVEN PAVEMENT IS ENCOUNTERED, SIGNS SHALL BE PLACED ON EACH SIDE OF THE ROADWAY.

c. WHEN THE DIFFERENCE IN ELEVATION IS BETWEEN THE THROUGH TRAFFIC LANE AND THE SHOULDER AND THE ELEVATION DIFFERENCE IS LESS THAN 3.5 INCHES, THE CONTRACTOR MAY USE WARNING SIGNS AND/OR PROTECTIVE DEVICES AS APPLICABLE AND APPROVED BY THE ENGINEER. SEE PARAGRAPH a REGARDING USE OF DRUMS, BARRICADES OR OTHER APPROVED PROTECTIVE DEVICES. WARNING SIGNS (UNEVEN LANES AND/OR SHOULDER DROP-OFF) WILL BE PLACED IN ADVANCE OF AND THROUGHOUT THE EXPOSED AREA. MAXIMUM SPACING BETWEEN SIGNS SHALL BE 2,000 FEET WITH A MINIMUM OF 2 SIGNS PER EXPOSED AREA. WHERE UNEVEN PAVEMENT IS ENCOUNTERED, SIGNS SHALL BE PLACED ON EACH SIDE OF THE ROADWAY.

IN THESE SITUATIONS, THE CONTRACTOR SHALL LIMIT HIS OPERATIONS TO ONE WORK ZONE NOT EXCEEDING 2 MILES IN LENGTH UNLESS OTHERWISE NOTED ON THE PLANS OR APPROVED BY THE ENGINEER. ONCE THE CONTRACTOR BEGINS WORK IN A WORK ZONE, A CONTINUOUS OPERATION SHALL BE MAINTAINED UNTIL THE DIFFERENCE IN ELEVATION IS ELIMINATED. SIMULTANEOUS WORK ON SEPARATE ROADWAYS OF DIVIDED HIGHWAYS WILL BE CONSIDERED INDEPENDENTLY IN REGARD TO RESTRICTION OF WORK ZONE ACTIVITY.

3. DIFFERENCES IN ELEVATION BETWEEN ADJACENT ROADWAY ELEMENTS GREATER THAN 6 INCHES BUT NOT EXCEEDING 18 INCHES, THE CONTRACTOR, WITH THE ENGINEER'S APPROVAL, MAY UTILIZE ONE OF THE FOLLOWING:

a. THE CONTRACTOR SHALL ACCOMPLISH SEPARATION BY DRUMS, BARRICADES OR OTHER APPROVED DEVICES IN ACCORDANCE WITH THE FOLLOWING:

(1) WHERE POSTED SPEEDS ARE 50 MPH OR GREATER, SPACING OF THE PROTECTIVE DEVICES SHALL NOT EXCEED 100 FEET.

(2) WHERE POSTED SPEEDS ARE LESS THAN 50 MPH, THE MAXIMUM SPACING OF THE PROTECTIVE DEVICES IN FEET SHALL NOT EXCEED TWICE THE POSTED SPEED IN MILES PER HOUR OR 50 FEET, WHICHEVER SPACING IS GREATER.

IN ORDER TO USE THIS METHOD, THE CONTRACTOR MUST REDUCE THE DIFFERENCE IN ELEVATION TO 6 INCHES OR LESS BY THE END OF THE WORKDAY THAT THE CONDITION IS CREATED.

b. THE CONTRACTOR SHALL PROVIDE DRUMS, BARRICADES OR OTHER APPROVED SEPARATION DEVICES AS SPECIFIED IN PARAGRAPH a, AND CONSTRUCT A STONE WEDGE WITH A 4:1 SLOPE, OR FLATTER, TO ELIMINATE THE VERTICAL OFFSET IF THE LOWER ELEVATION IS AT OR BELOW SUBGRADE AT THE END OF EACH DAY.

c. THE CONTRACTOR SHALL PROVIDE DRUMS, BARRICADES OR OTHER APPROVED SEPARATION DEVICES AS SPECIFIED IN PARAGRAPH a AND IF THE LOWER ELEVATION IS BASE STONE OR ASPHALT PAVEMENT, PLACEMENT OF SUBSEQUENT LAYERS OF PAVEMENT MUST BEGIN THE NEXT WORK DAY AND PROGRESS CONTINUOUSLY UNTIL THE DIFFERENCE IN ELEVATION IS ELIMINATED OR REDUCED TO SIX INCHES OR LESS.

d. THE CONTRACTOR SHALL PROVIDE SEPARATION BY PORTABLE BARRIER RAIL.

FOR PRECEDING CONDITIONS a, b, AND c, THE CONTRACTOR SHALL USE THE SHOULDER DROP-OFF WARNING SIGN WITH PLAQUE (W8-17 AND W8-17P). IT SHALL BE PLACED IN ADVANCE OF AND THROUGHOUT THE EXPOSED AREA. MAXIMUM SPACING BETWEEN THE SIGNS SHALL BE 2,000 FEET WITH A MINIMUM OF 2 SIGNS PER EXPOSED AREA. IN THESE SITUATIONS, THE CONTRACTOR SHALL LIMIT HIS OPERATIONS TO ONE WORK ZONE NOT EXCEEDING 1 MILE IN LENGTH UNLESS OTHERWISE NOTED ON THE PLANS OR APPROVED BY THE ENGINEER. ONCE THE CONTRACTOR BEGINS WORK IN A WORK ZONE, A CONTINUOUS OPERATION SHALL BE MAINTAINED UNTIL THE DIFFERENCE IS ELIMINATED. SIMULTANEOUS WORK ON SEPARATE ROADWAYS OF DIVIDED HIGHWAYS WILL BE CONSIDERED INDEPENDENTLY IN REGARD TO RESTRICTION OF WORK ZONE ACTIVITY.

4. FOR DIFFERENCES IN ELEVATION BETWEEN ADJACENT ROADWAY ELEMENTS GREATER THAN 18 INCHES.

SEPARATION WILL BE PROVIDED BY USE OF PORTABLE BARRIER RAIL.

IN THIS SITUATION THE CONTRACTOR SHALL LIMIT HIS OPERATIONS TO ONE WORK ZONE NOT EXCEEDING 1 MILE IN LENGTH UNLESS OTHERWISE NOTED ON THE PLANS OR APPROVED BY THE ENGINEER. ONCE THE CONTRACTOR BEGINS WORK IN A WORK ZONE, A CONTINUOUS OPERATION SHALL BE MAINTAINED UNTIL THE DIFFERENCE IN ELEVATION IS ELIMINATED. SIMULTANEOUS WORK ON SEPARATE ROADWAYS OF DIVIDED HIGHWAYS WILL BE CONSIDERED INDEPENDENTLY IN REGARD TO RESTRICTION OF WORK ZONE ACTIVITY.

B. IF THE DIFFERENCE IN ELEVATION IS WITHIN 30 FEET OF THE NEAREST TRAFFIC LANE BEING USED BY TRAFFIC CAUSED BY GRADING, EXCAVATION FOR UTILITIES, DRAINAGE STRUCTURES, UNDERCUTTING, ETC.:

1. IF THE DIFFERENCE IN ELEVATION IS WITHIN 8 FEET OF THE NEAREST TRAFFIC LANE WITH DIFFERENCE IN ELEVATION GREATER THAN 3/4 INCH AND NOT EXCEEDING 2 INCHES.

WARNING SIGNS (UNEVEN LANES AND/OR SHOULDER DROP-OFF) SHALL BE PLACED IN ADVANCE OF AND THROUGHOUT THE EXPOSED AREA. MAXIMUM SPACING BETWEEN SIGNS SHALL BE 2,000 FEET WITH A MINIMUM OF 2 SIGNS PER EXPOSED AREA. WHERE UNEVEN PAVEMENT IS ENCOUNTERED, SIGNS SHALL BE PLACED ON EACH SIDE OF THE ROADWAY.

2. IF THE DIFFERENCE IN ELEVATION IS WITHIN 8 FEET OF THE NEAREST TRAFFIC LANE WITH DIFFERENCE IN ELEVATION GREATER THAN 2 INCHES AND NOT EXCEEDING 6 INCHES:

a. SEPARATION SHALL BE ACCOMPLISHED BY DRUMS, BARRICADES OR OTHER APPROVED DEVICES IN ACCORDANCE WITH THE FOLLOWING:

(1) WHERE POSTED SPEEDS ARE 50 MPH OR GREATER, SPACING OF THE PROTECTIVE DEVICES SHALL NOT EXCEED 100 FEET.

(2) WHERE POSTED SPEEDS ARE LESS THAN 50 MPH THE MAXIMUM SPACING OF THE PROTECTIVE DEVICES IN FEET SHALL NOT EXCEED TWICE THE POSTED SPEED IN MILES PER HOUR OR 50 FEET, WHICHEVER SPACING IS GREATER.

3. IF THE DIFFERENCE IN ELEVATION IS WITHIN 8 FEET OF THE NEAREST TRAFFIC LANE WITH DIFFERENCE IN ELEVATION GREATER THAN 6 INCHES:

a. SEPARATION SHALL BE ACCOMPLISHED BY DRUMS, BARRICADES OR OTHER APPROVED DEVICES IN ACCORDANCE WITH THE FOLLOWING:

(1) WHERE POSTED SPEEDS ARE 50 MPH OR GREATER, SPACING OF THE PROTECTIVE DEVICES SHALL NOT EXCEED 100 FEET.

(2) WHERE POSTED SPEEDS ARE LESS THAN 50 MPH THE MAXIMUM SPACING OF THE PROTECTIVE DEVICES IN FEET SHALL NOT EXCEED TWICE THE POSTED SPEED IN MILES PER HOUR OR 50 FEET, WHICHEVER SPACING IS GREATER.

b. ELIMINATE VERTICAL OFFSET BY CONSTRUCTING A STONE WEDGE OR GRADING TO A 4:1 SLOPE, OR FLATTER, OR USE PORTABLE BARRIER RAIL.

THE CONTRACTOR SHALL SCHEDULE THE WORK SO AS TO MINIMIZE THE TIME TRAFFIC IS EXPOSED TO AN ELEVATION DIFFERENCE. ONCE THE CONTRACTOR BEGINS AN ACTIVITY THAT CREATES AN ELEVATION DIFFERENCE WITHIN 8 FEET OF A TRAFFIC LANE, THE ACTIVITY SHALL BE PURSUED AS A CONTINUOUS OPERATION UNTIL THE ELEVATION DIFFERENCE IS ELIMINATED.

C. IF THE DIFFERENCE IN ELEVATION IS FARTHER THAN 8 FEET FROM THE NEAREST TRAFFIC LANE BUT NOT MORE THAN 30 FEET FROM THE NEAREST TRAFFIC LANE:

SEPARATION SHALL BE ACCOMPLISHED BY DRUMS, BARRICADES OR OTHER APPROVED DEVICES IN ACCORDANCE WITH THE FOLLOWING:

1. WHERE POSTED SPEEDS ARE 50 MPH OR GREATER, SPACING OF THE PROTECTIVE DEVICES SHALL NOT EXCEED 100 FEET.

2. WHERE POSTED SPEEDS ARE LESS THAN 50 MPH, THE MAXIMUM SPACING OF THE PROTECTIVE DEVICES IN FEET SHALL NOT EXCEED TWICE THE POSTED SPEED IN MILES PER HOUR OR 50 FEET, WHICHEVER SPACING IS GREATER.

THE CONTRACTOR SHALL SCHEDULE THE WORK SO AS TO MINIMIZE THE TIME TRAFFIC IS EXPOSED TO AN ELEVATION DIFFERENCE. ONCE THE CONTRACTOR BEGINS AN ACTIVITY THAT CREATES AN ELEVATION DIFFERENCE, THE ACTIVITY SHALL BE PURSUED AS A CONTINUOUS OPERATION UNTIL THE ELEVATION DIFFERENCE IS ELIMINATED.

UNOFFICIAL SET

NOT FOR BIDDING

SEALED BY

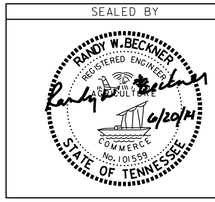

STATE OF TENNESSEE
DEPARTMENT OF TRANSPORTATION

TRAFFIC CONTROL NOTES

6/19/2014 4:11:30 PM
H:\3131G - Sullivan Co Eastman S1A\017_DropOffNotes.sht

TYPE	YEAR	PROJECT NO.	SHEET NO.
CONST.	2014	82956-3288-04 STP-126(19)	17A

TRAFFIC CONTROL QUANTITIES

	ITEM NO.	DESCRIPTION	UNIT	SIA PROJ. QUANTITY 82956-3288-04	SR 126 PROJ. QUANTITY 82085-3236-14
	712-01	TRAFFIC CONTROL	L.S.	0.5	0.5
(1)	712-02.02	INTERCONNECTED PORTABLE BARRIER RAIL	L.F.	100	100
	712-04.01	FLEXIBLE DRUMS (CHANNELIZING)	EACH	25	75
	712-05.01	WARNING LIGHTS (TYPE A)	EACH	16	16
	712-06	SIGNS (CONSTRUCTION)	S.F.	79	144
	712-07.03	TEMPORARY BARRICADES (TYPE III)	L.F.	80	80
	712-08.03	ARROW BOARD (TYPE C)	EACH	2	0
	716-05.01	PAINTED PAVEMENT MARKING (4" LINE)	L.M.	0.2	0.3

(1) TO BE USED AS DIRECTED BY THE ENGINEER.

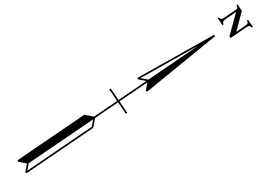

105 110 115

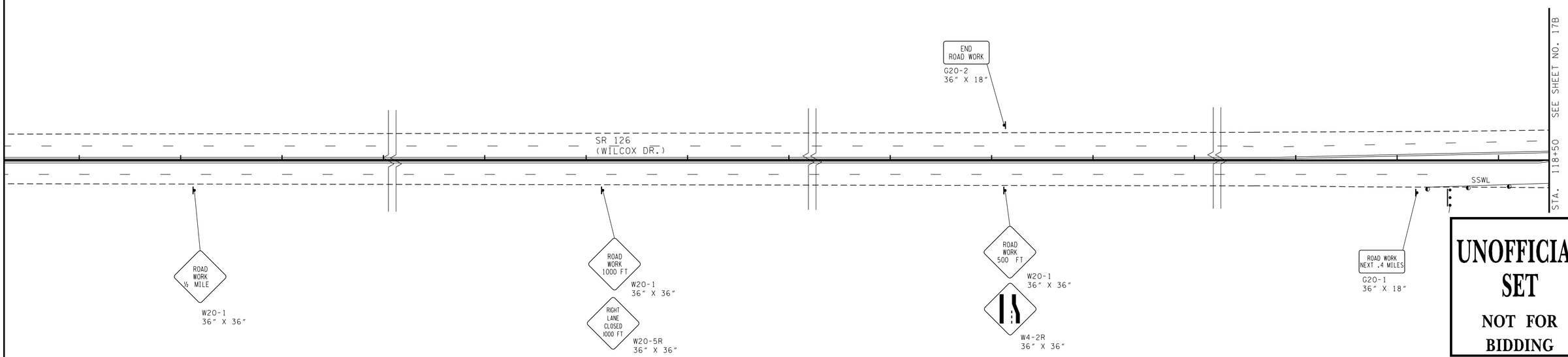

UNOFFICIAL SET

NOT FOR BIDDING

TRAFFIC CONTROL QUANTITIES

ITEM NO.	DESCRIPTION	UNIT	QUANTITY	ITEM NO. 712-06 (S.F.)	SIZE	M.U.T.C.D. NO.	REMARKS
712-06	SIGNS (CONSTRUCTION)	S.F.	3	27	36"X36"	W20-1	ROAD WORK 1/2 MILE
712-06	SIGNS (CONSTRUCTION)	S.F.	4	36	36"X36"	W20-1	ROAD WORK 1000 FT
712-06	SIGNS (CONSTRUCTION)	S.F.	5	45	36"X36"	W20-2	ROAD WORK 500 FT
712-06	SIGNS (CONSTRUCTION)	S.F.	7	31.5	36"X18"	G20-2	END ROAD WORK
712-16	SIGNS (CONSTRUCTION)	S.F.	2	20	48"X30"	R11-2	ROAD CLOSED
712-06	SIGNS (CONSTRUCTION)	S.F.	1	9	36"X36"	W20-5R	RIGHT LANE CLOSED 1000 FT
712-06	SIGNS (CONSTRUCTION)	S.F.	1	9	36"X36"	W20-5L	LEFT LANE CLOSED 500 FT
712-06	SIGNS (CONSTRUCTION)	S.F.	1	9	36"X36"	W4-2R	LANE CLOSED MERGE RIGHT - SYMBOL
712-06	SIGNS (CONSTRUCTION)	S.F.	1	9	36"X36"	W4-2L	LANE CLOSED MERGE LEFT - SYMBOL
712-06	SIGNS (CONSTRUCTION)	S.F.	2	9	36"X18"	G20-1	ROAD WORK NEXT 0.4 MILES
712-06	SIGNS (CONSTRUCTION)	S.F.	2	18	36"X36"	W20-1	ROAD WORK AHEAD
TOTAL				**222.5**			

NOTES

1. THE CONSTRUCTION SIGNING PLANS ARE TO SERVE AS A GUIDE ONLY. OTHER SIGNS MAY BE REQUIRED DURING VARIOUS PHASES OF CONSTRUCTION. SEE STD. DWGS. T-WZ-10, T-WZ-11, T-WZ-12.
2. THIS TRAFFIC CONTROL PLAN DOES NOT RELIEVE THE CONTRACTOR OF THE RESPONSIBILITY OF INSTALLING TRAFFIC CONTROL DEVICES IN ACCORDANCE WITH THE CURRENT EDITION OF THE "MANUAL ON UNIFORM TRAFFIC CONTROL DEVICES."
3. THE CONTRACTOR IS TO MAINTAIN ACCESS TO ALL LOCAL PROPERTY OWNERS.
4. 2 FLAGS ARE TO BE MOUNTED ON ALL ROAD WORK ADVANCE WARNING SIGNS ON S.R. 126. FLAGS ARE TO BE 18"X18" AND FLOURESCENT RED-ORANGE IN COLOR. COST OF FLAGS IS TO BE INCLUDED IN THE COST OF OTHER ITEMS.
5. THE FOLLOWING SIGNS ARE TO BE USED WHEN CONSTRUCTION OPERATIONS WARRANT. TO BE LOCATED AS DIRECTED BY THE T.D.O.T. OPERATIONS DISTRICT ENGINEER. COST IS TO BE INCLUDED IN THE COST OF ITEM 712-06.

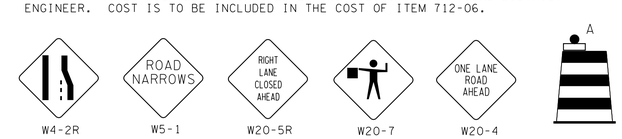

SEALED BY

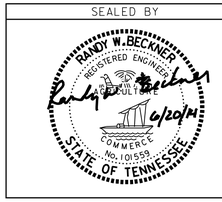

COORDINATES ARE NAD/83(1995). ARE DATUM ADJUSTED BY THE FACTOR OF 1.000030 AND TIED TO THE TGRN. ALL ELEVATIONS ARE REFERENCED TO THE NAVD 1988.

STATE OF TENNESSEE

DEPARTMENT OF TRANSPORTATION

TRAFFIC CONTROL PLAN

STA. 103+50 TO STA. 118+50

SCALE: 1"= 50'

6/19/2014 4:12:35 PM
H:\3131G - Sullivan Co Eastman SIA\017A_TCLayout1.sht

TYPE	YEAR	PROJECT NO.	SHEET NO.
CONST.	2014	82956-3288-04 STP-126(19)	17B

TRAFFIC CONTROL LEGEND	
SYMBOL	ITEM
	WORK ZONE

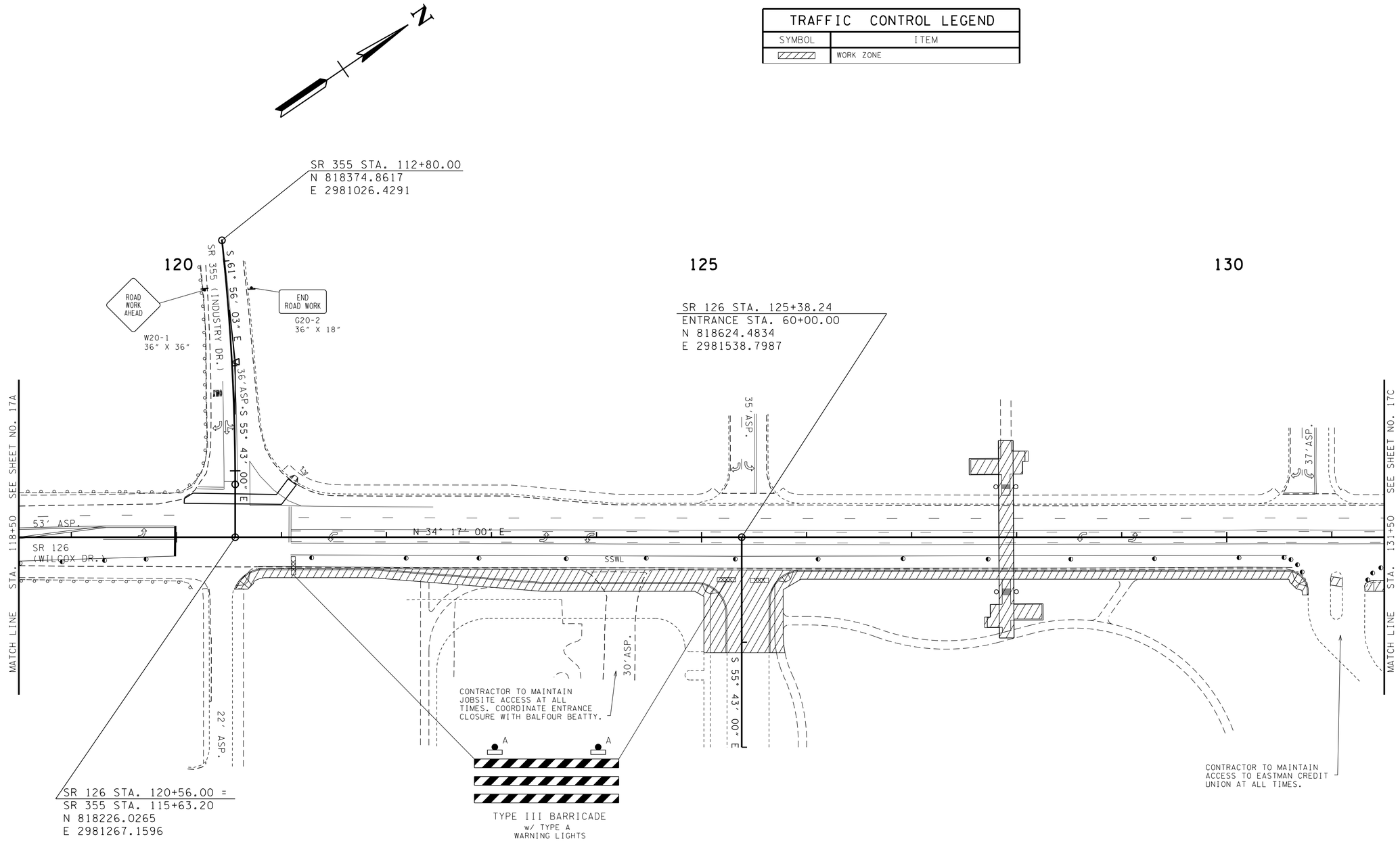

UNOFFICIAL SET

NOT FOR BIDDING

SEALED BY

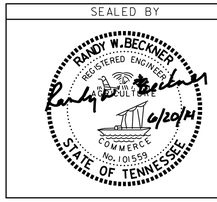

COORDINATES ARE NAD/83(1995), ARE DATUM ADJUSTED BY THE FACTOR OF 1.000030 AND TIED TO THE TGRN. ALL ELEVATIONS ARE REFERENCED TO THE NAVD 1988.

STATE OF TENNESSEE
DEPARTMENT OF TRANSPORTATION

TRAFFIC CONTROL PLAN

STA. 118+50 TO STA. 131+50

SCALE: 1"= 50'

6/19/2014 4:12:55 PM
H:+3131G - Sullivan Co Eastman S1A+017B_TCLayout2.sht

TYPE	YEAR	PROJECT NO.	SHEET NO.
CONST.	2014	82956-3288-04 STP-126(19)	17C

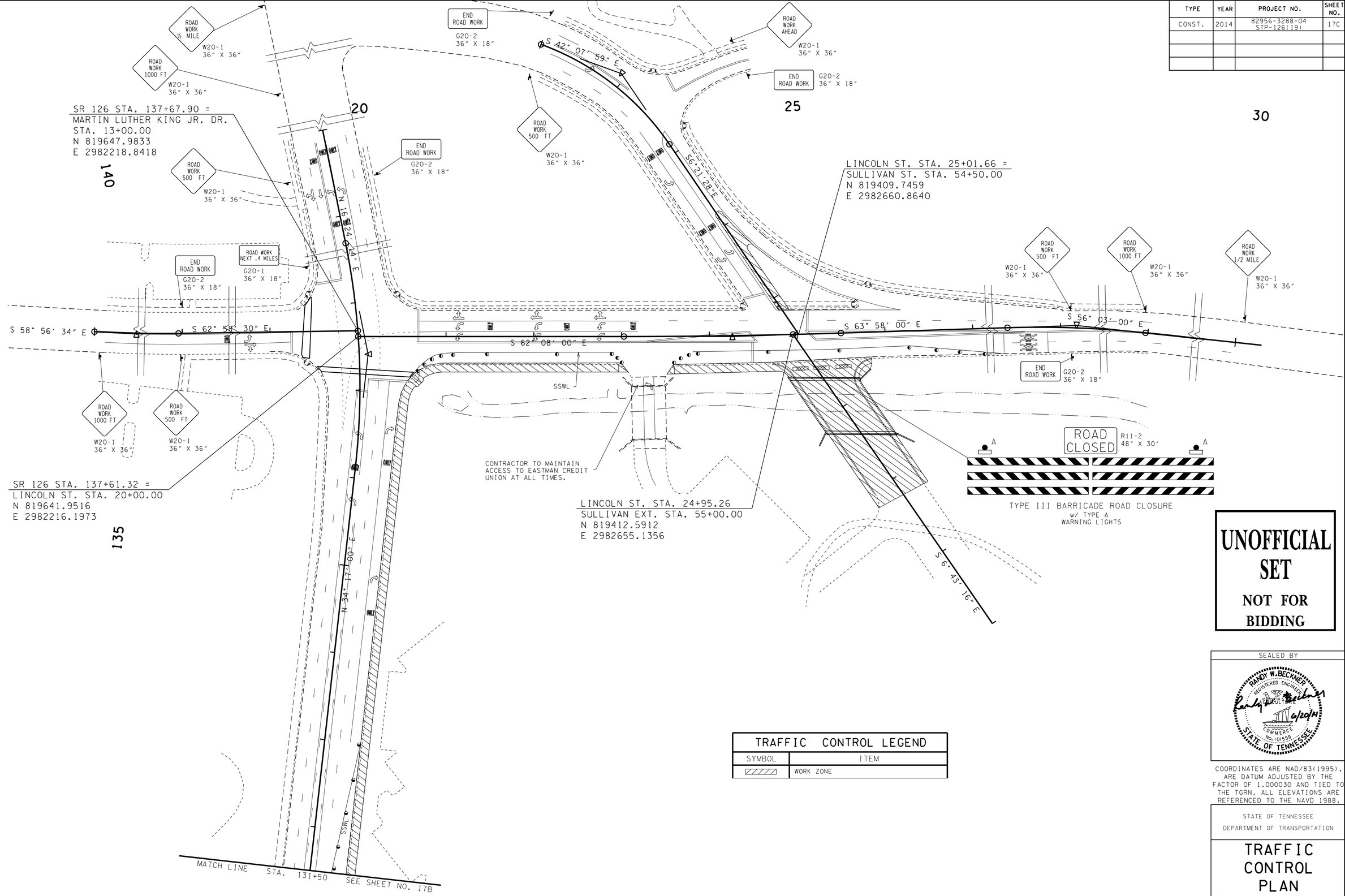

TRAFFIC CONTROL LEGEND	
SYMBOL	ITEM
▨	WORK ZONE

UNOFFICIAL SET

NOT FOR BIDDING

SEALED BY

RANDY W. BECKNER
REGISTERED ENGINEER
No. 101559
STATE OF TENNESSEE
6/20/14

COORDINATES ARE NAD/83(1995), ARE DATUM ADJUSTED BY THE FACTOR OF 1.000030 AND TIED TO THE TGRN. ALL ELEVATIONS ARE REFERENCED TO THE NAVD 1988.

STATE OF TENNESSEE
DEPARTMENT OF TRANSPORTATION

TRAFFIC CONTROL PLAN

STA. 131+50 TO STA. 140+00

SCALE: 1"= 50'

6/19/2014 4:12:55 PM
H:\3131G - Sullivan Co Eastman SIA\017C_TCLayout3.sht

TYPE	YEAR	PROJECT NO.	SHEET NO.
CONST.	2014	82956-3288-04 STP-126(19)	17D

TRAFFIC CONTROL LEGEND	
SYMBOL	ITEM
	WORK ZONE
	WORK ZONE (CRANE STAGING AREA)

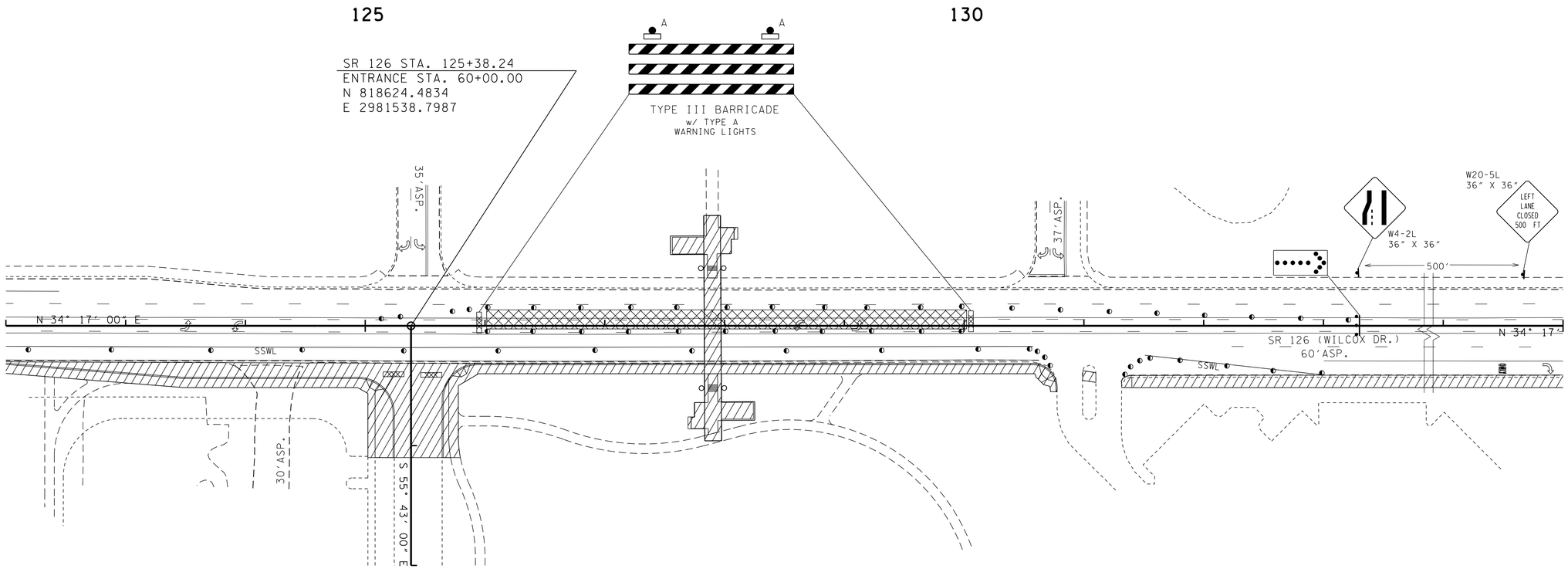

NOTES

1. ANY WORK REQUIRING THE CLOSURE OF S.R. 126 SHALL BE EITHER ON WEEKENDS OR AT NIGHT BETWEEN THE HOURS OF 7:00 PM AND 6:00 AM, AS DIRECTED BY THE TDOT OPERATIONS DISTRICT ENGINEER.
2. ANY ROAD CLOSURE IS SUBJECT TO APPROVAL BY TDOT AND THE CITY OF KINGSPORT. THE CONTRACTOR SHALL OBTAIN APPROVAL AND PROVIDE NOTICE AT LEAST 14 DAYS PRIOR TO CLOSURE.
3. S.R. 126 SHALL NOT BE CLOSED ON WEEKENDS (FRIDAY THROUGH SUNDAY) WHEN THERE IS A NASCAR RACE SCHEDULED AT BRISTOL MOTOR SPEEDWAY.

UNOFFICIAL SET

NOT FOR BIDDING

SEALED BY

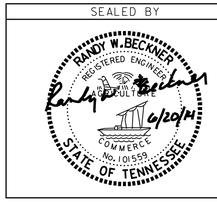

COORDINATES ARE NAD/83(1995), ARE DATUM ADJUSTED BY THE FACTOR OF 1.000030 AND TIED TO THE TGRN. ALL ELEVATIONS ARE REFERENCED TO THE NAVD 1988.

STATE OF TENNESSEE

DEPARTMENT OF TRANSPORTATION

TRAFFIC CONTROL PLAN CRANE STAGING

SCALE: 1"= 50'

6/23/2014 4:09:23 PM
H:\3131G - Sullivan Co Eastman SIA\017D_TCLayout4.sht

TYPE	YEAR	PROJECT NO.	SHEET NO.
R.O.W.	2014	82956-2288-04 82085-2236-04	17
CONST.	2014	82956-3288-04 STP-126(19)	18

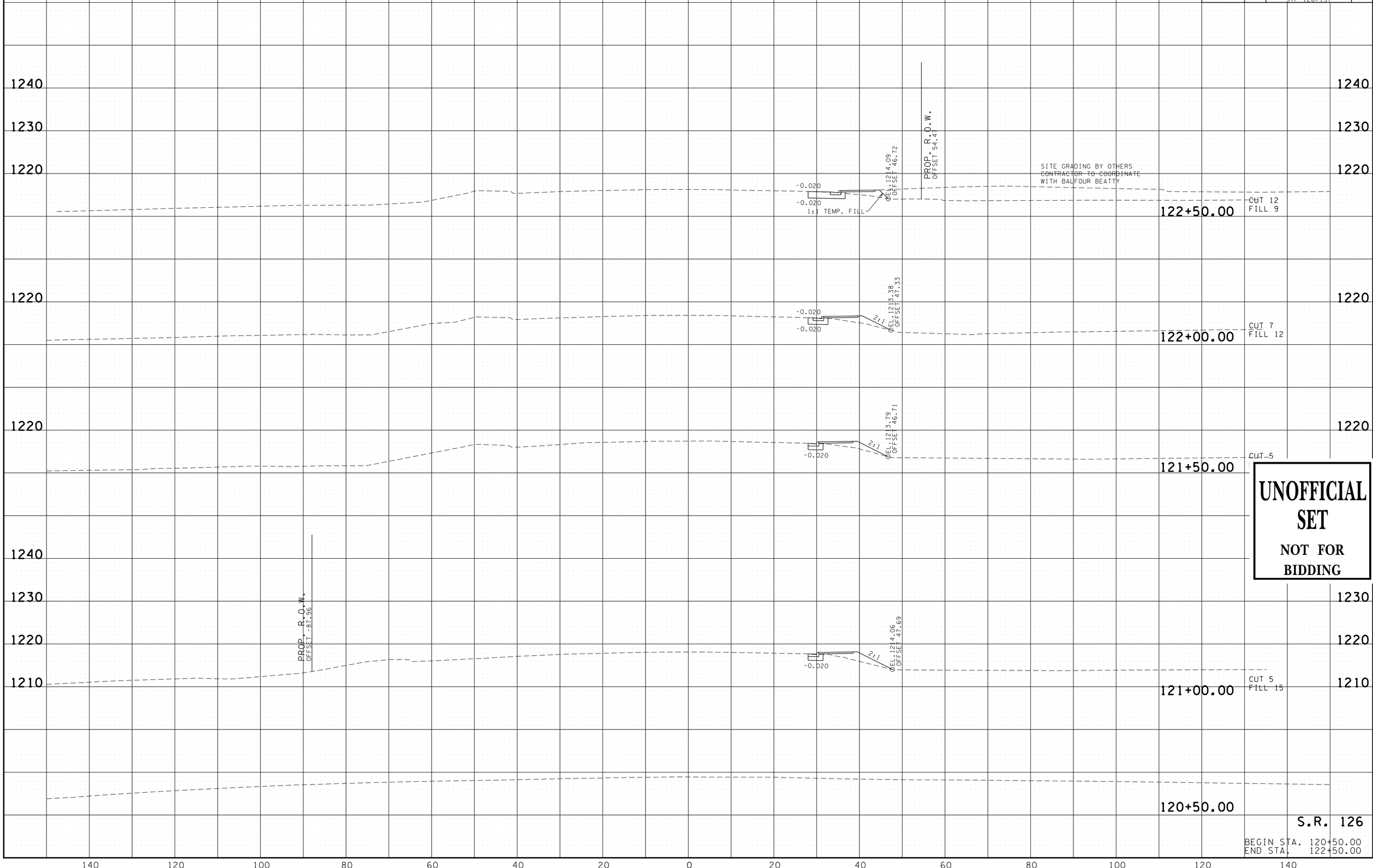

UNOFFICIAL SET

NOT FOR BIDDING

S.R. 126

BEGIN STA. 120+50.00
END STA. 122+50.00

6/19/2014 4:12:57 PM
H:\313IG - Sullivan Co Eastman SIA\090_WilcoxXSSheets.sht

TYPE	YEAR	PROJECT NO.	SHEET NO.
R.O.W.	2014	82956-2288-04 82085-2236-04	18
CONST.	2014	82956-3288-04 STP-126(19)	19

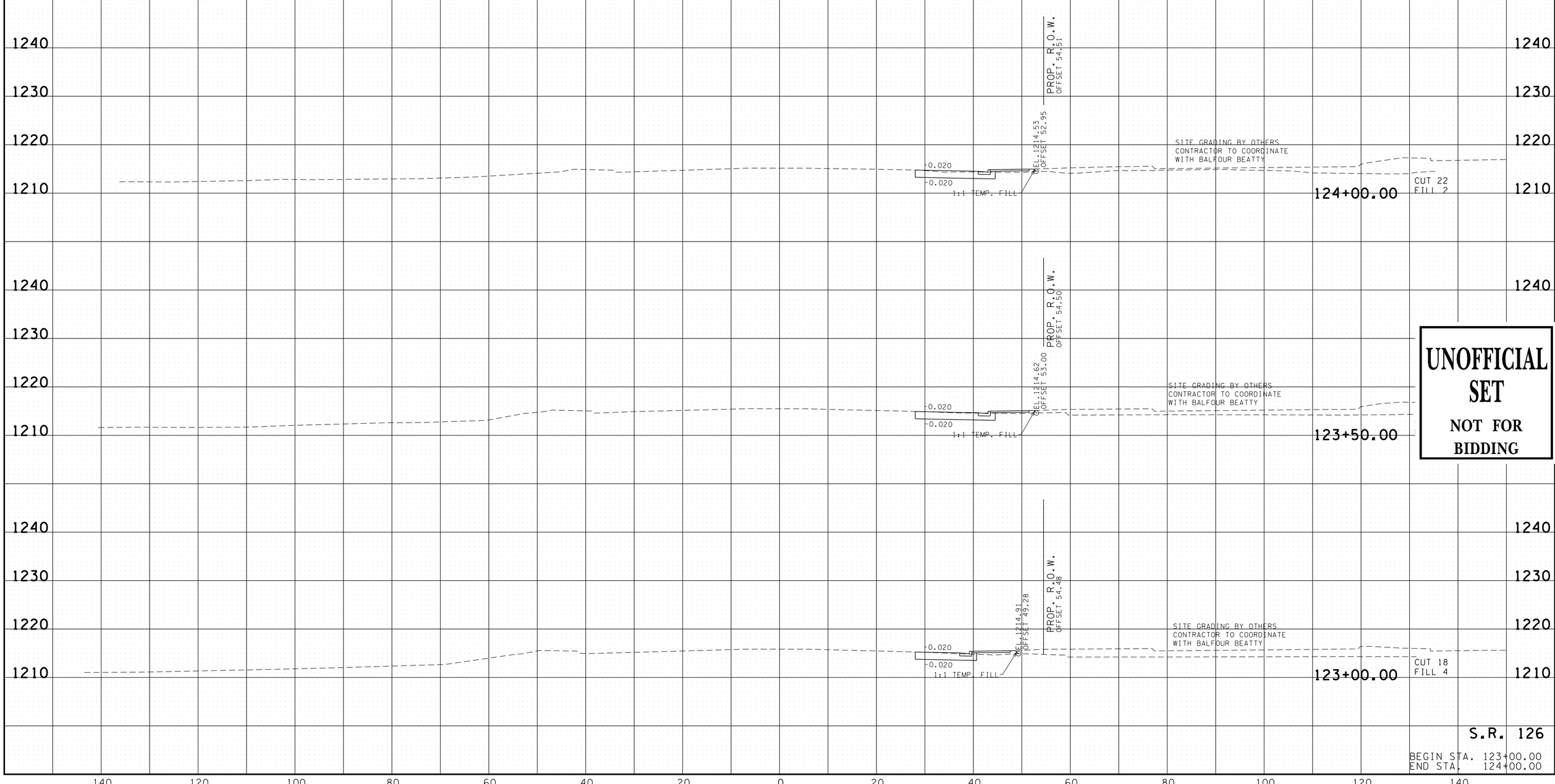

UNOFFICIAL SET

NOT FOR BIDDING

S.R. 126

BEGIN STA. 123+00.00
END STA. 124+00.00

6/19/2014 4:12:59 PM
H:\313IG - Sullivan Co Eastman SIA\090_WilcoxXSSheets.sht

TYPE	YEAR	PROJECT NO.	SHEET NO.
R.O.W.	2014	82956-2288-04 82085-2236-04	19
CONST.	2014	82956-3288-04 STP-126(19)	20

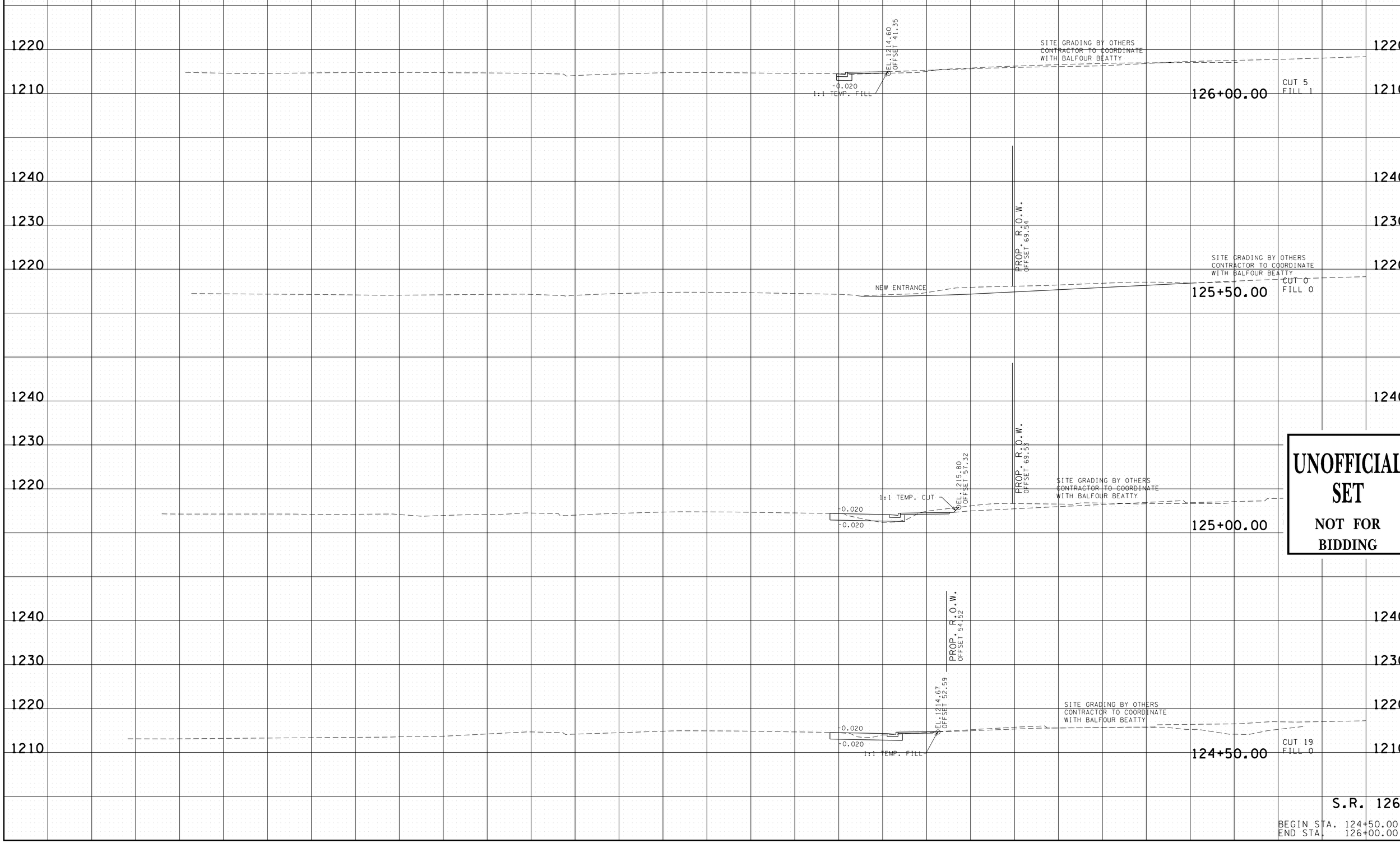

UNOFFICIAL SET

NOT FOR BIDDING

S.R. 126

BEGIN STA. 124+50.00
END STA. 126+00.00

6/19/2014 4:13:00 PM
H:\313IG - Sullivan Co Eastman SIA\090_WilcoxXSSheets.sht

TYPE	YEAR	PROJECT NO.	SHEET NO.
R.O.W.	2014	82956-2288-04 82085-2236-04	20
CONST.	2014	82956-3288-04 STP-126(19)	21

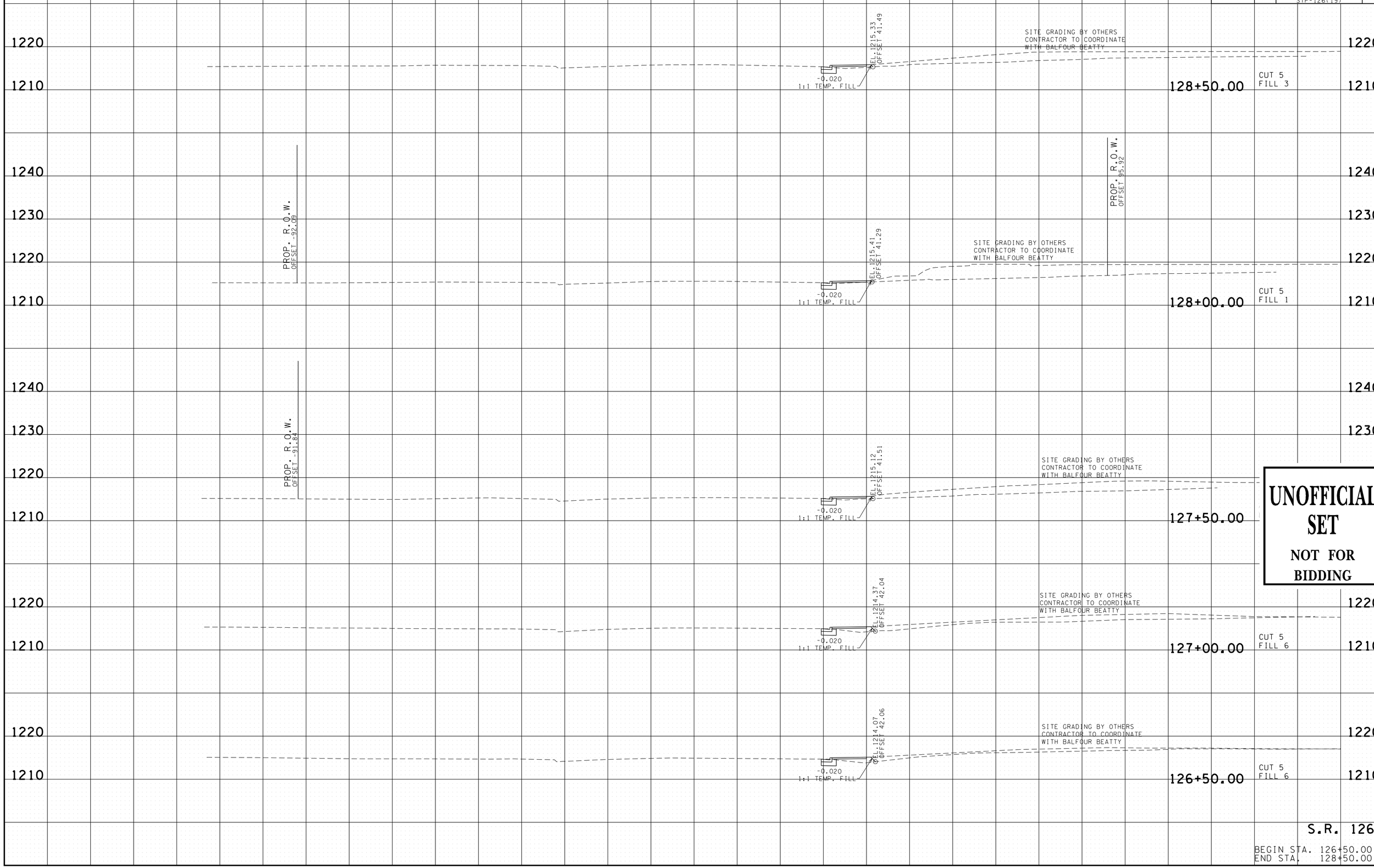

UNOFFICIAL SET

NOT FOR BIDDING

S.R. 126

BEGIN STA. 126+50.00
END STA. 128+50.00

6/19/2014 4:13:01 PM
H:\3131G - Sullivan Co Eastman SIA\090_WilcoxXSSheets.sht

TYPE	YEAR	PROJECT NO.	SHEET NO.
R.O.W.	2014	82956-2288-04 82085-2236-04	21
CONST.	2014	82956-3288-04 STP-126(19)	22

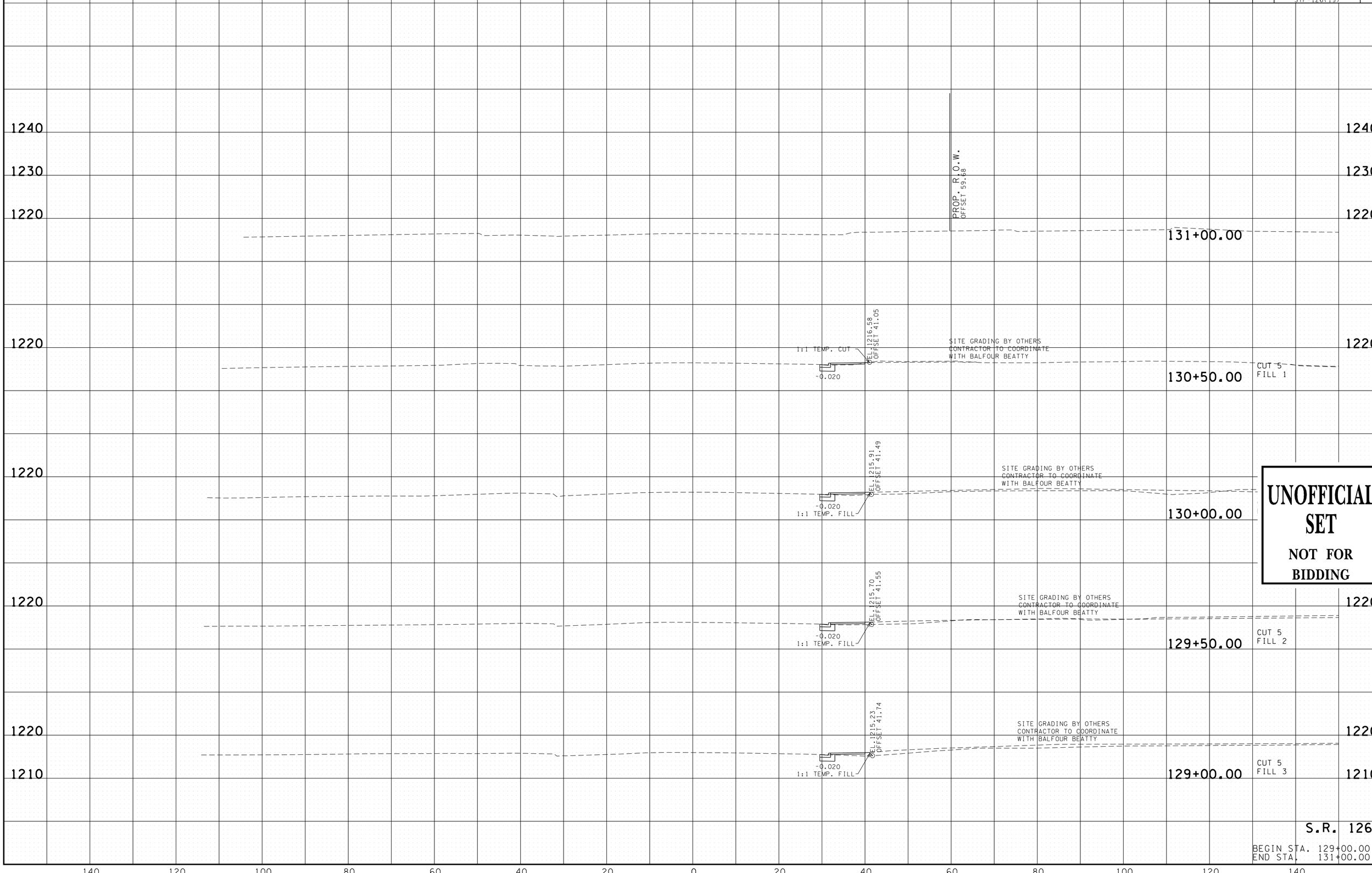

UNOFFICIAL SET

NOT FOR BIDDING

S.R. 126

BEGIN STA. 129+00.00
END STA. 131+00.00

6/19/2014 4:13:02 PM
H:\313IG - Sullivan Co Eastman SIA\090_WilcoxXSSheets.sht

TYPE	YEAR	PROJECT NO.	SHEET NO.
R.O.W.	2014	82956-2288-04 82085-2236-04	22
CONST.	2014	82956-3288-04 STP-126(19)	23

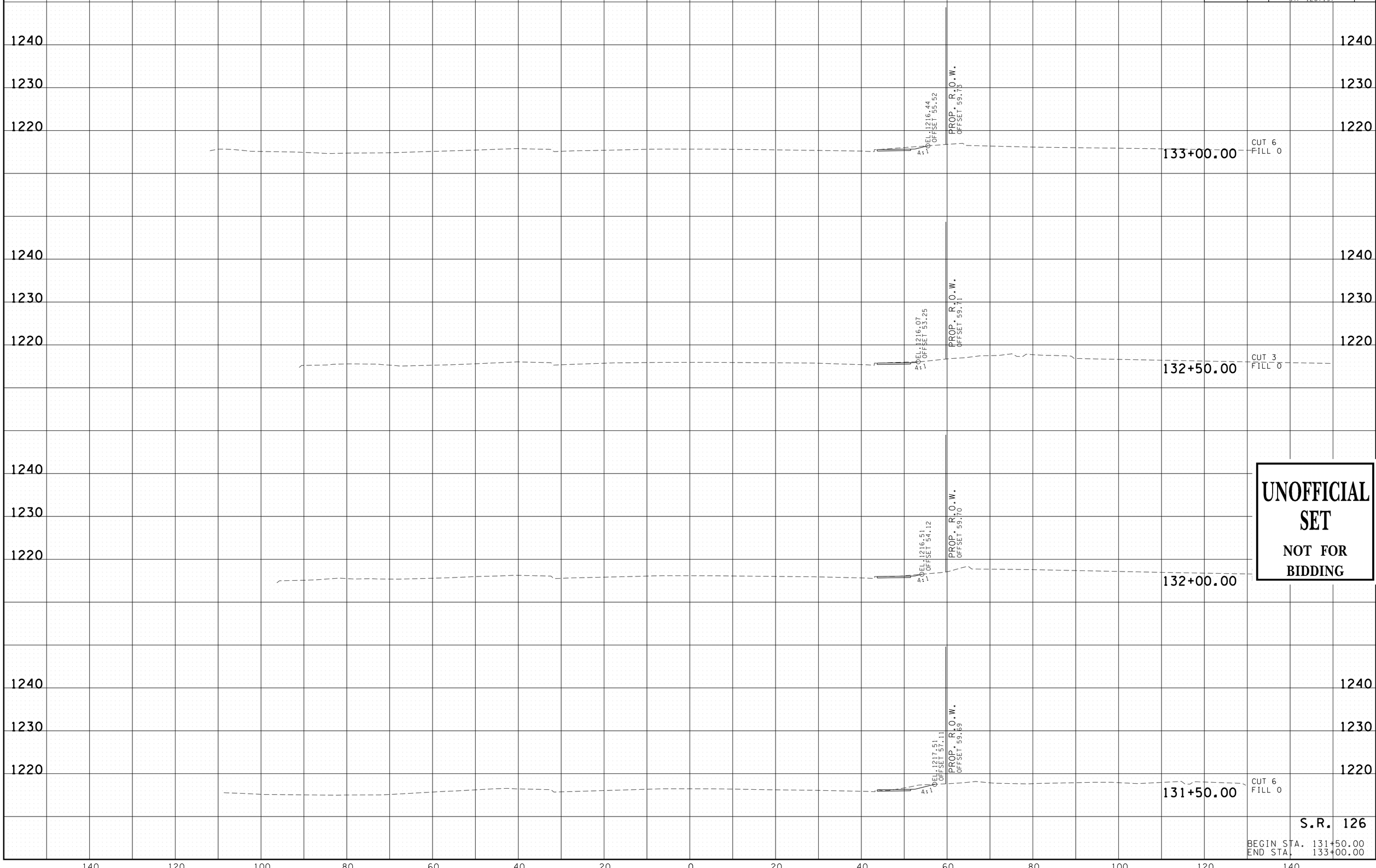

UNOFFICIAL SET

NOT FOR BIDDING

S.R. 126

BEGIN STA. 131+50.00
END STA. 133+00.00

6/19/2014 4:13:03 PM
H:\313IG - Sullivan Co Eastman SIA\090_WilcoxXSSheets.sht

TYPE	YEAR	PROJECT NO.	SHEET NO.
R.O.W.	2014	82956-2288-04 82085-2236-04	23
CONST.	2014	82956-3288-04 STP-126(19)	24

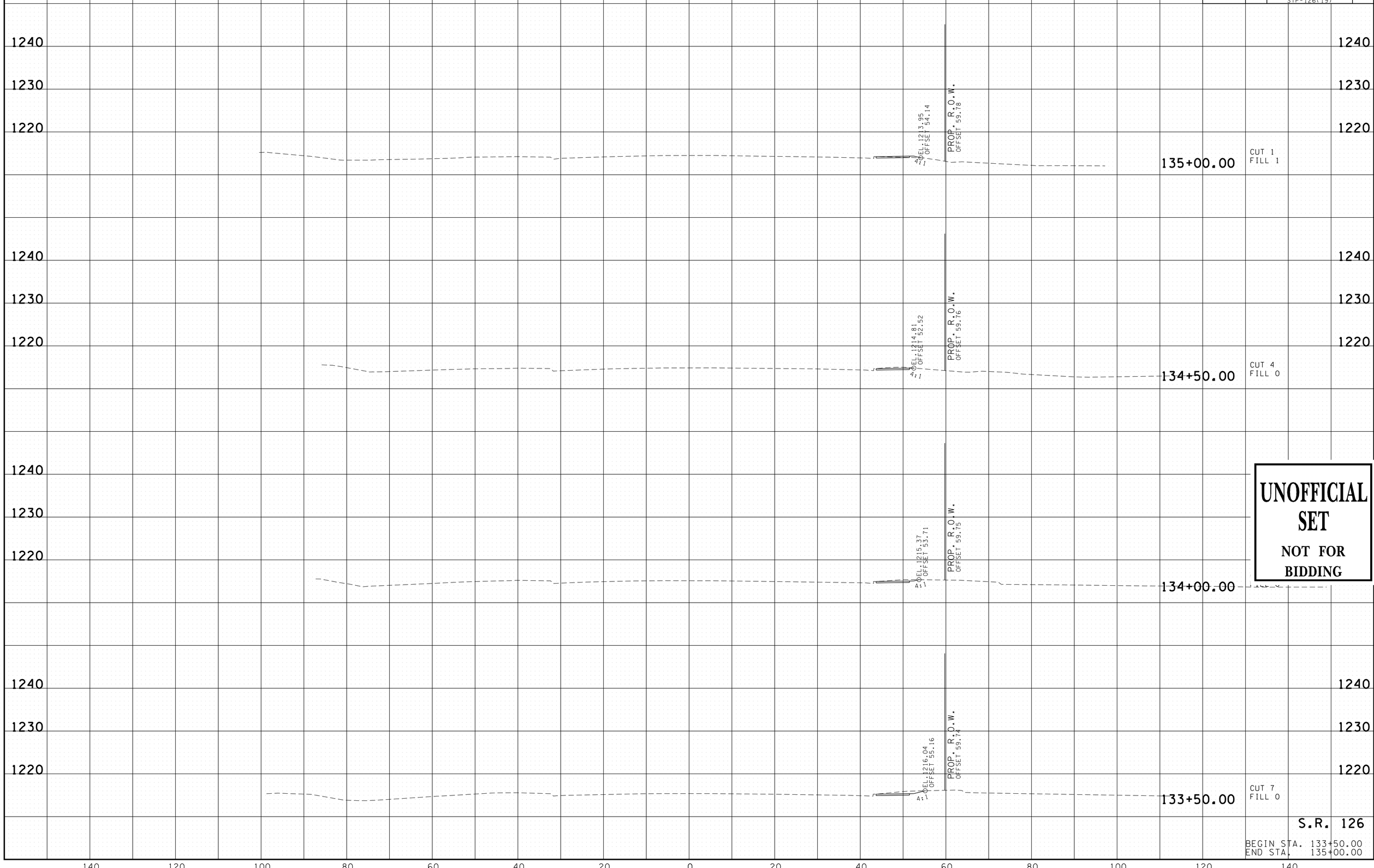

UNOFFICIAL SET

NOT FOR BIDDING

S.R. 126

BEGIN STA. 133+50.00
END STA. 135+00.00

6/19/2014 4:13:04 PM
H:\313IG - Sullivan Co Eastman SIA\090_WilcoxXSSheets.sht

TYPE	YEAR	PROJECT NO.	SHEET NO.
R.O.W.	2014	82956-2288-04 82085-2236-04	24
CONST.	2014	82956-3288-04 STP-126(19)	25

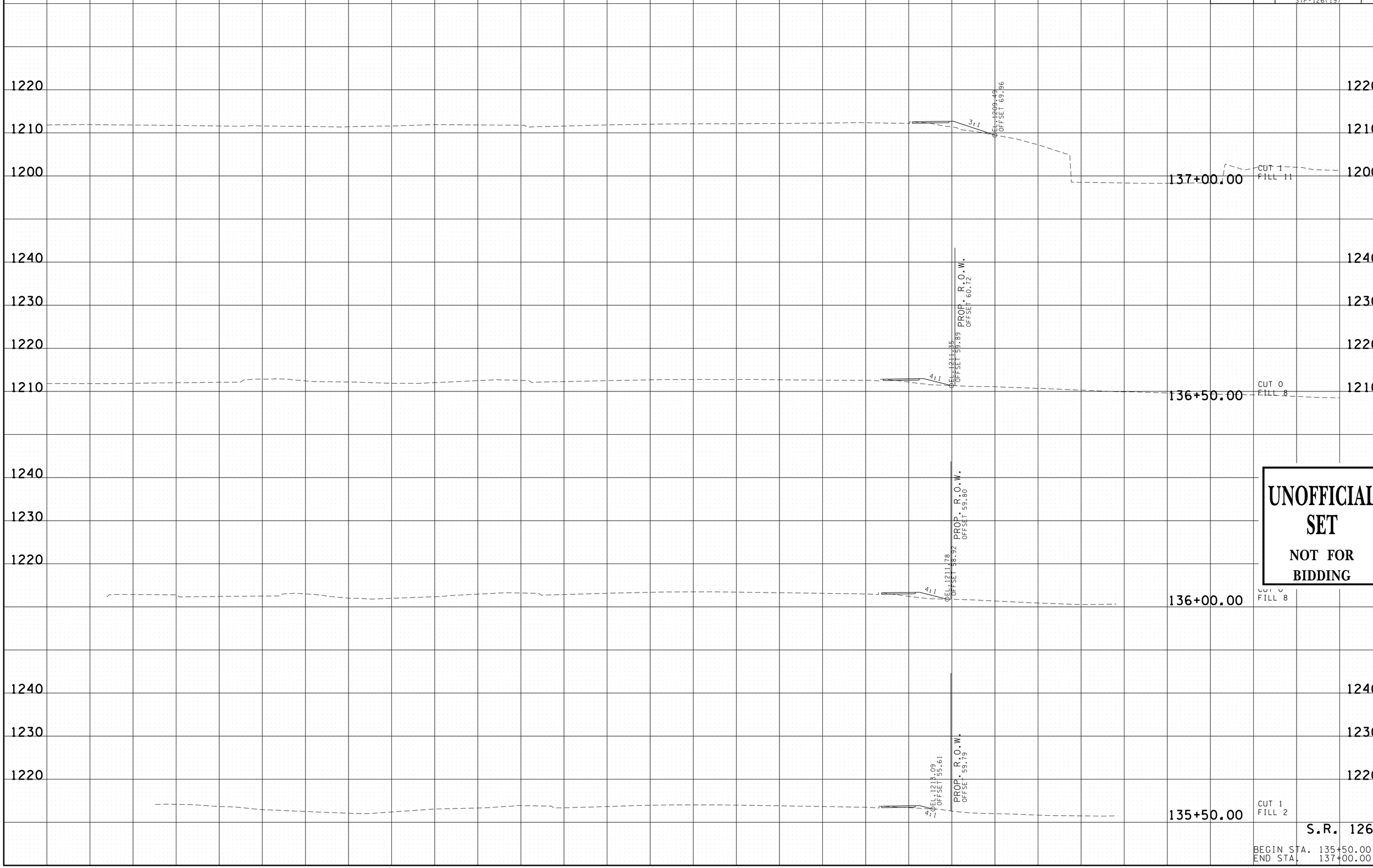

UNOFFICIAL SET

NOT FOR BIDDING

S.R. 126

BEGIN STA. 135+50.00
END STA. 137+00.00

6/19/2014 4:13:06 PM
H:\3IG - Sullivan Co Eastman SIA\090_WilcoxXSSheets.sht

TYPE	YEAR	PROJECT NO.	SHEET NO.
R.O.W.	2014	82956-2288-04 82085-2236-04	25
CONST.	2014	82956-3288-04 STP-126(19)	26

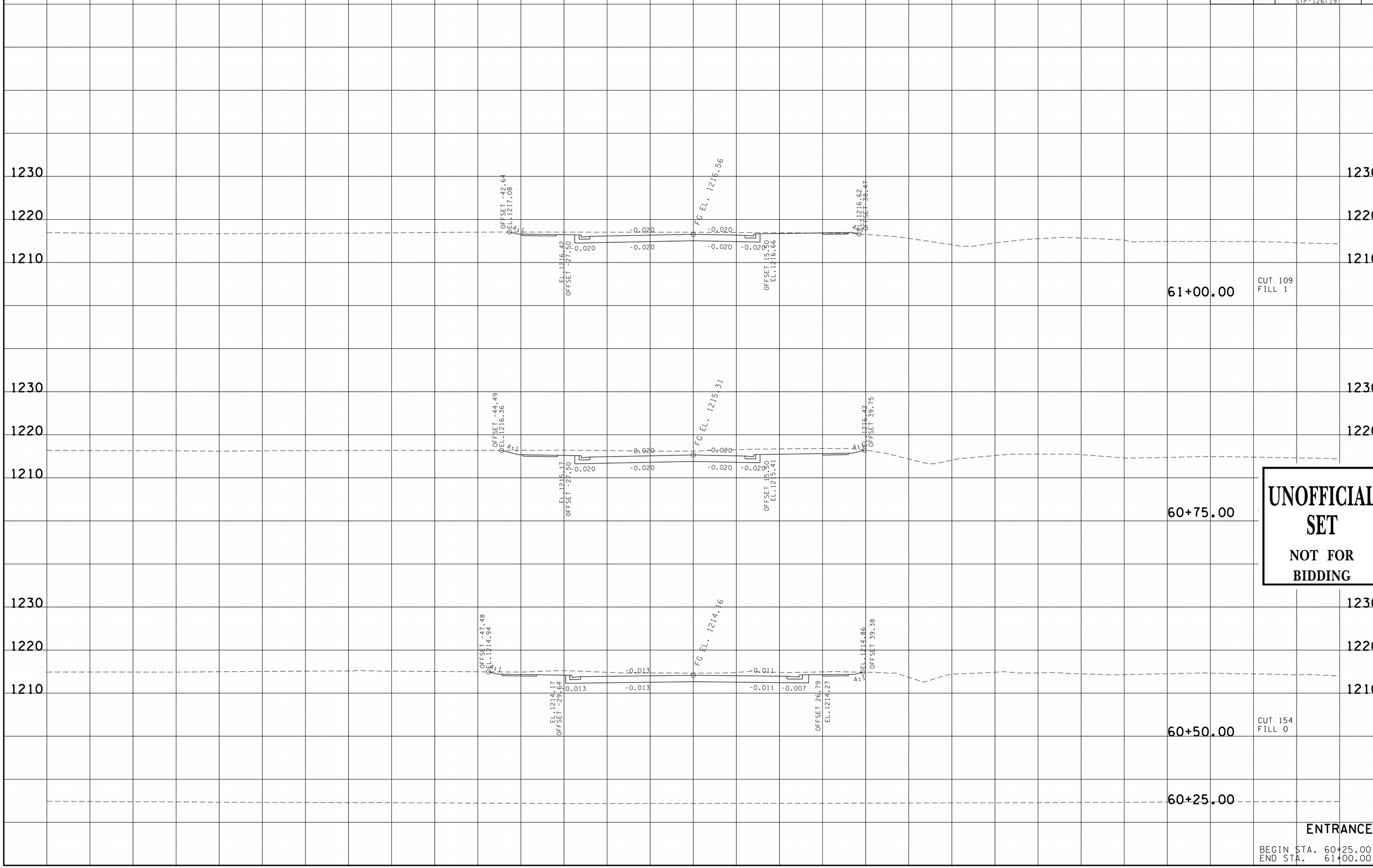

6/19/2014 4:13:07 PM
H:\313G - Sullivan Co Eastman SJA\09LEntranceXSSheets.sht

TYPE	YEAR	PROJECT NO.	SHEET NO.
R.O.W.	2014	82956-2288-04 82085-2236-04	26
CONST.	2014	82956-3288-04 STP-126(19)	27

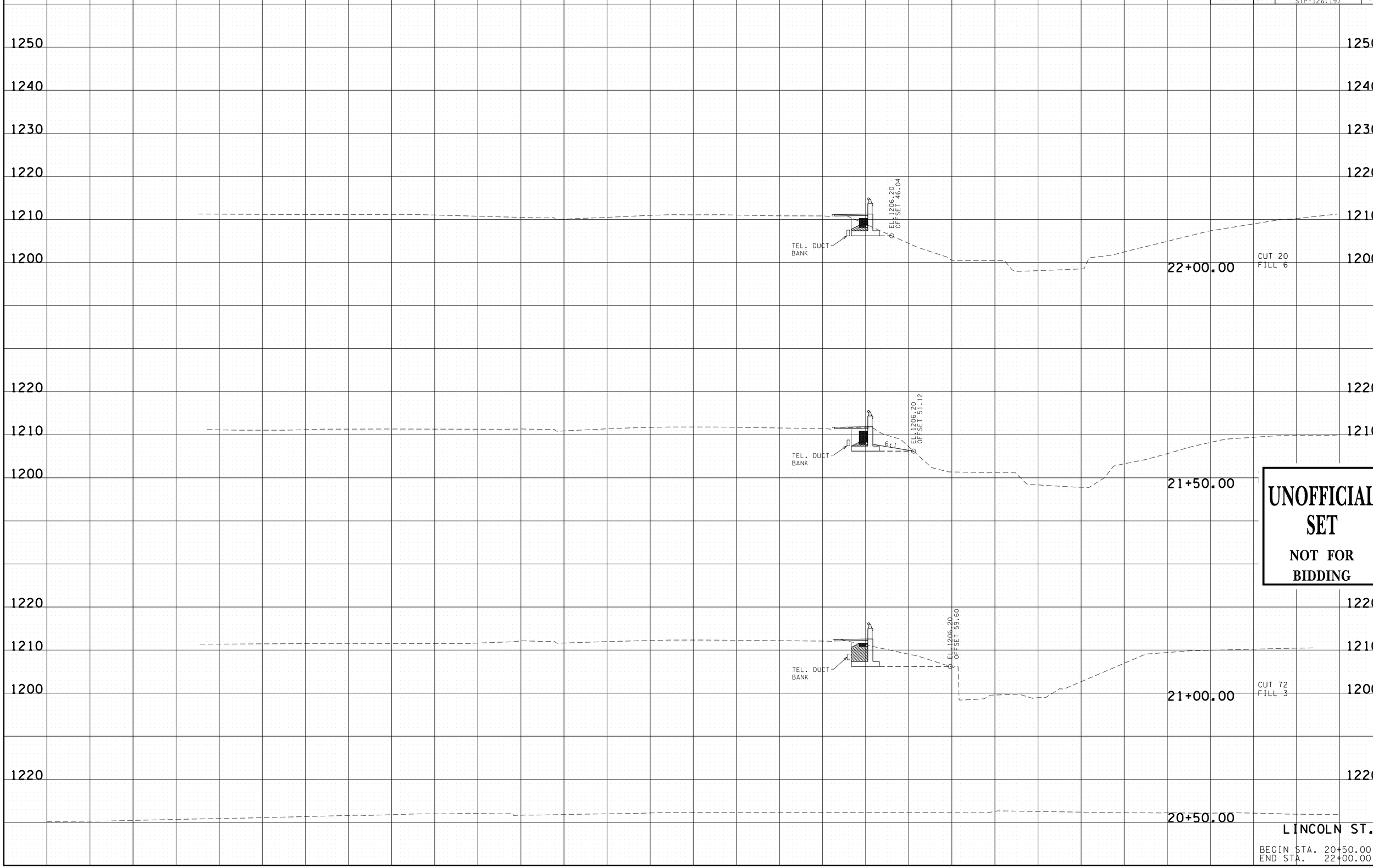

UNOFFICIAL SET

NOT FOR BIDDING

LINCOLN ST.

BEGIN STA. 20+50.00
END STA. 22+00.00

6/19/2014 4:13:08 PM
H:\313IG - Sullivan Co Eastman SIA\092_LincolnXSSheets.sht

TYPE	YEAR	PROJECT NO.	SHEET NO.
R.O.W.	2014	82956-2288-04 82085-2236-04	27
CONST.	2014	82956-3288-04 STP-126(19)	28

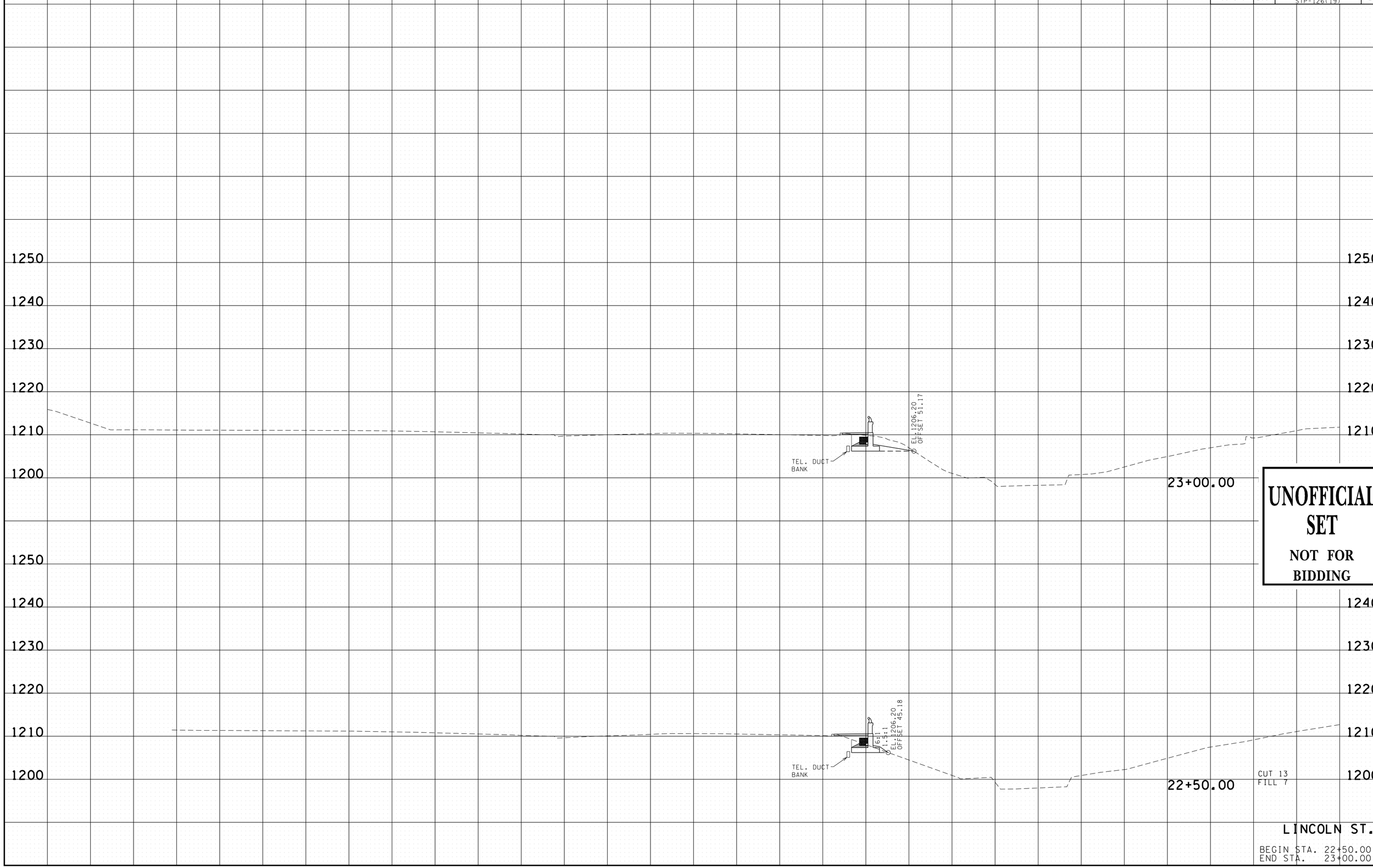

UNOFFICIAL SET

NOT FOR BIDDING

LINCOLN ST.

BEGIN STA. 22+50.00
END STA. 23+00.00

6/19/2014 4:13:09 PM
H:\3316 - Sullivan Co Eastman SIA\092_LincolnXSSheets.sht

TYPE	YEAR	PROJECT NO.	SHEET NO.
R.O.W.	2014	82956-2288-04 82085-2236-04	28
CONST.	2014	82956-3288-04 STP-126(19)	29

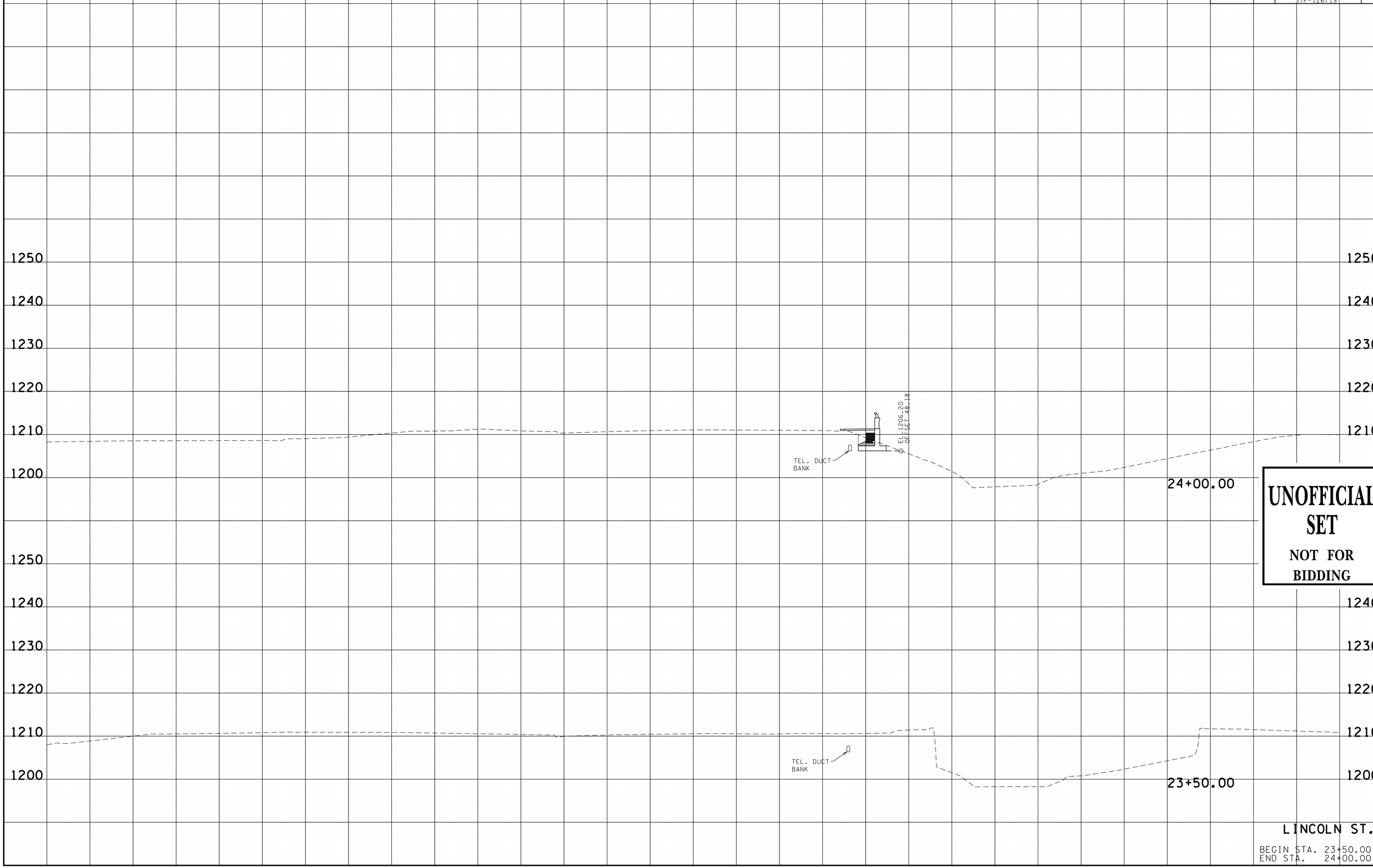

UNOFFICIAL SET

NOT FOR BIDDING

LINCOLN ST.

BEGIN STA. 23+50.00
END STA. 24+00.00

6/19/2014 4:13:10 PM
H:\3131G - Sullivan Co Eastman SIA\092_LincolnXSSheets.sht

TYPE	YEAR	PROJECT NO.	SHEET NO.
R.O.W.	2014	82956-2288-04 82085-2236-04	29
CONST.	2014	82956-3288-04 STP-126(19)	30

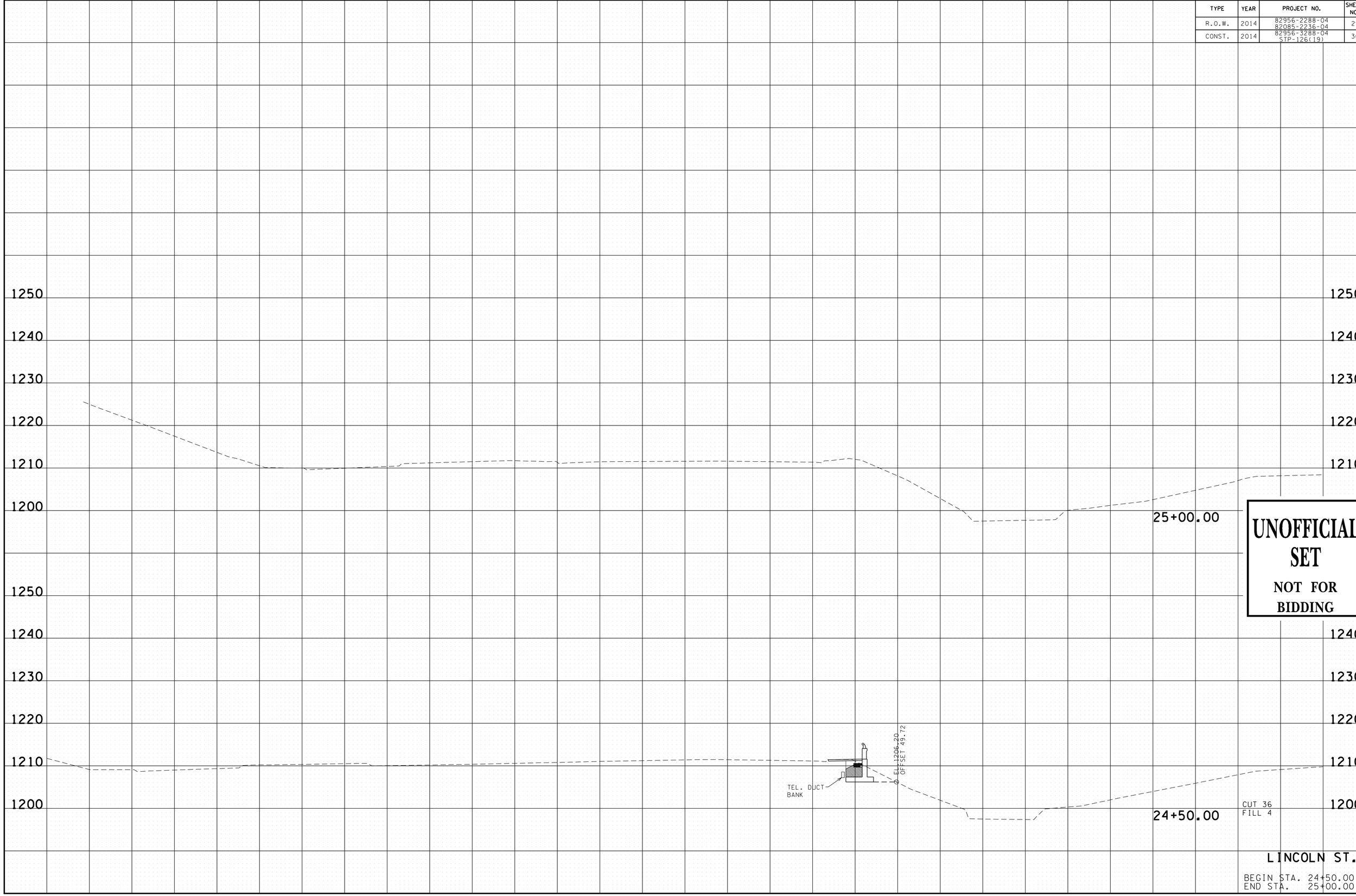

UNOFFICIAL SET

NOT FOR BIDDING

LINCOLN ST.

BEGIN STA. 24+50.00
END STA. 25+00.00

6/19/2014 4:13:11 PM
H:\3131G - Sullivan Co Eastman SIA\092_LincolnXSSheets.sht

TYPE	YEAR	PROJECT NO.	SHEET NO.
R.O.W.	2014	82956-2288-04 82085-2236-04	30
CONST.	2014	82956-3288-04 STP-126(19)	31

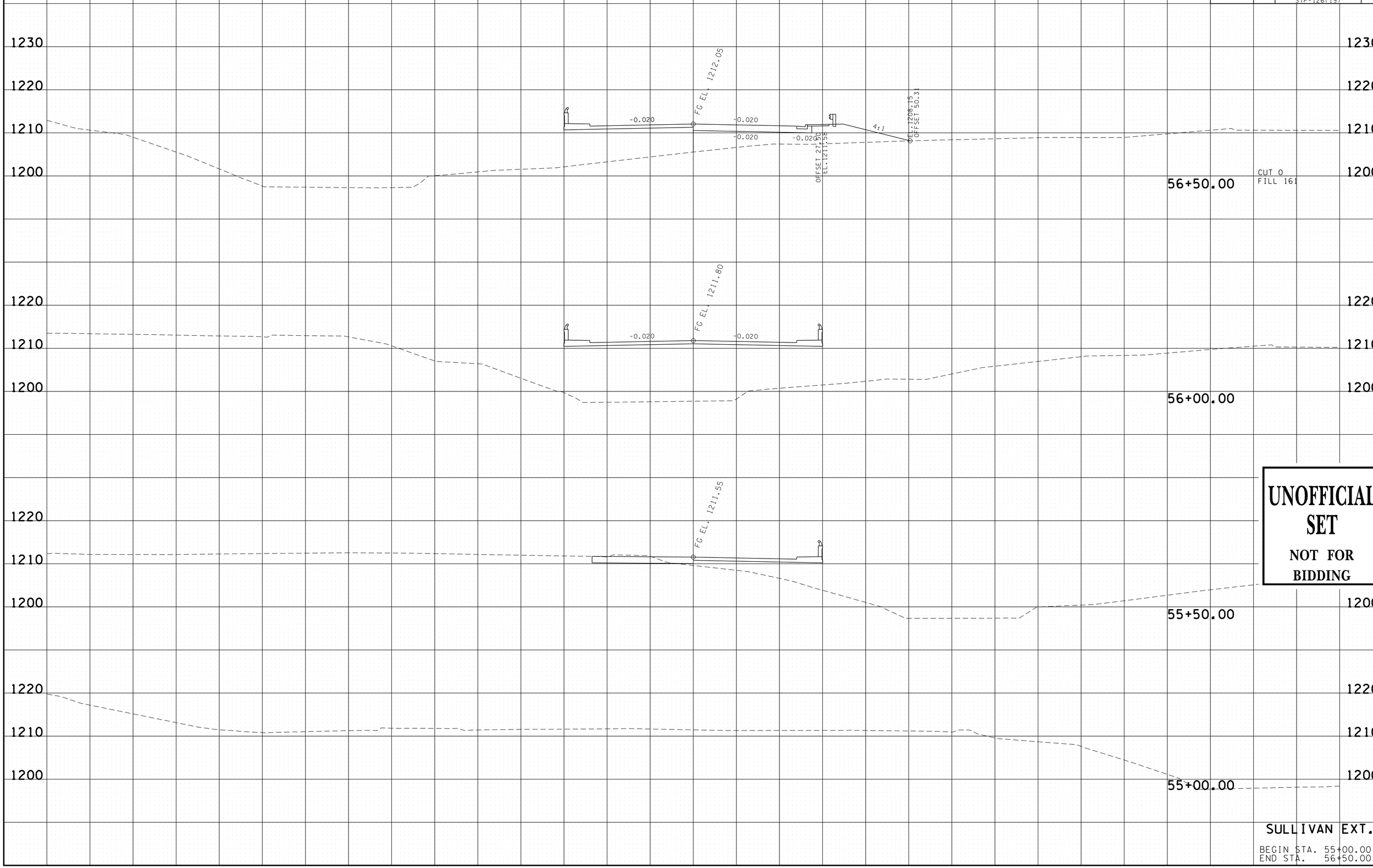

UNOFFICIAL SET

NOT FOR BIDDING

SULLIVAN EXT.

BEGIN STA. 55+00.00
END STA. 56+50.00

6/19/2014 4:13:12 PM
H:\3131G - Sullivan Co Eastman SIA\093_SullivanExtXSSheets.sht

TYPE	YEAR	PROJECT NO.	SHEET NO.
R.O.W.	2014	82956-2288-04 82085-2236-04	31
CONST.	2014	82956-3288-04 STP-126(19)	32

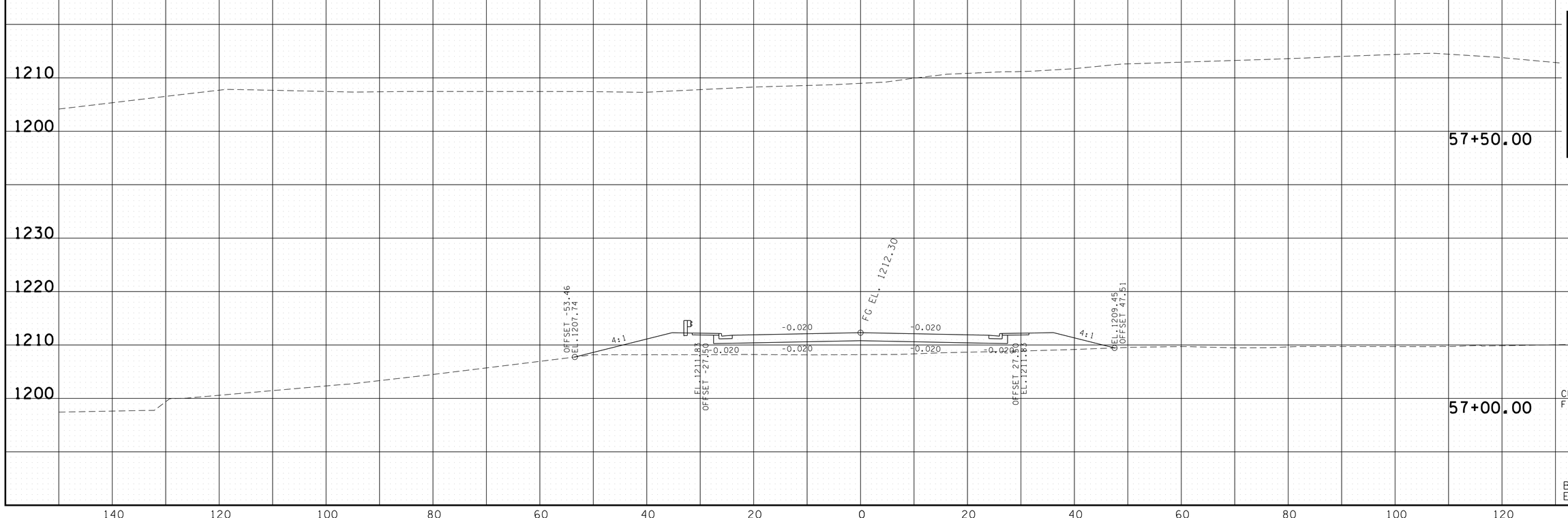

UNOFFICIAL SET

NOT FOR BIDDING

SULLIVAN EXT.

BEGIN STA. 57+00.00
END STA. 57+50.00

6/19/2014 4:13:13 PM
H:\313IG - Sullivan Co Eastman SIA\093.SullivanExtXSSheets.sht

TYPE	YEAR	PROJECT NO.	SHEET NO.
R.O.W.	2014	82956-2288-04 82085-2236-04	32
CONST.	2014	82956-3288-04 STP-126(19)	33

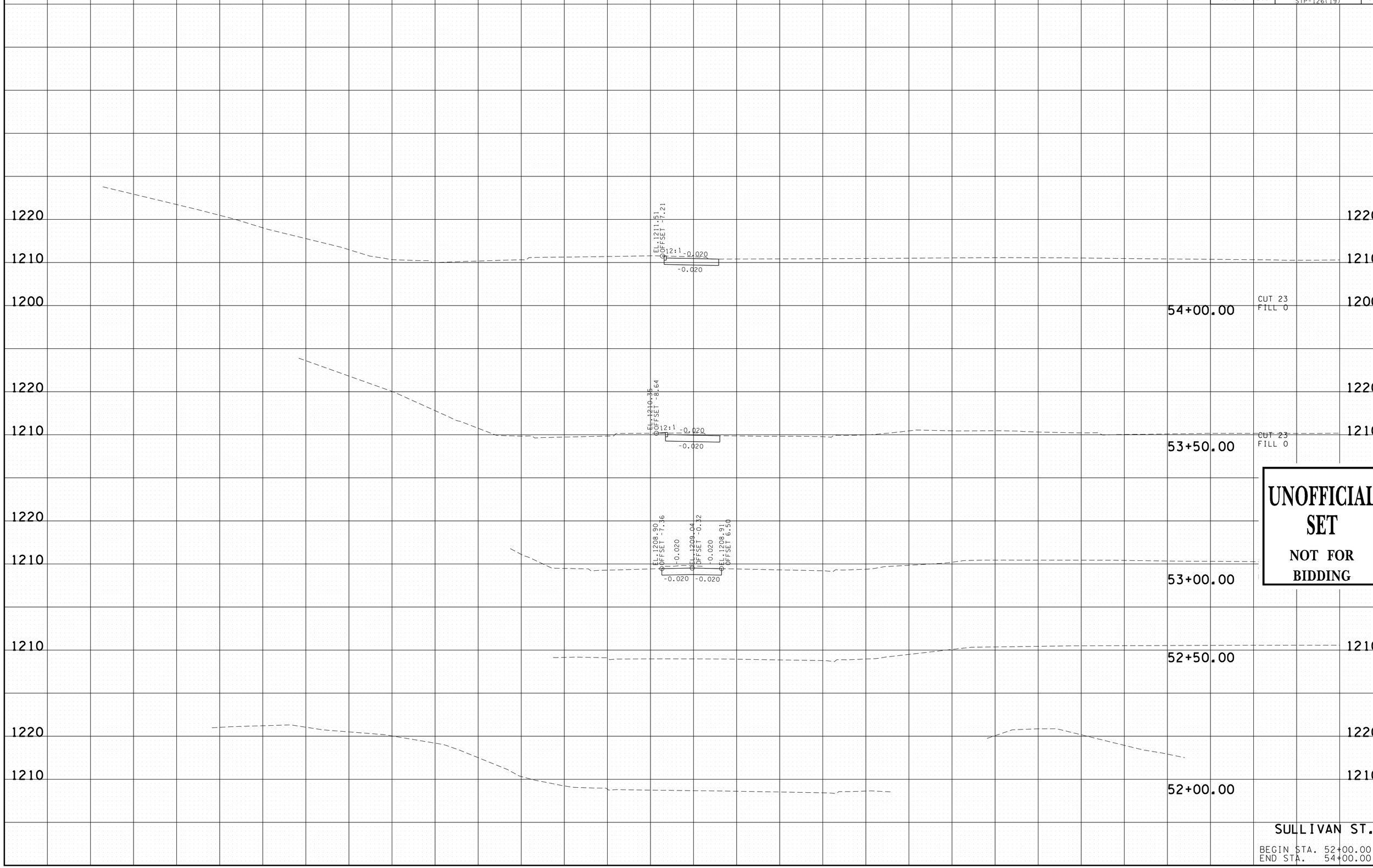

6/19/2014 4:13:14 PM
H:\313\G - Sullivan Co Eastman SIA\094_SullivanSTXSSheets.sht

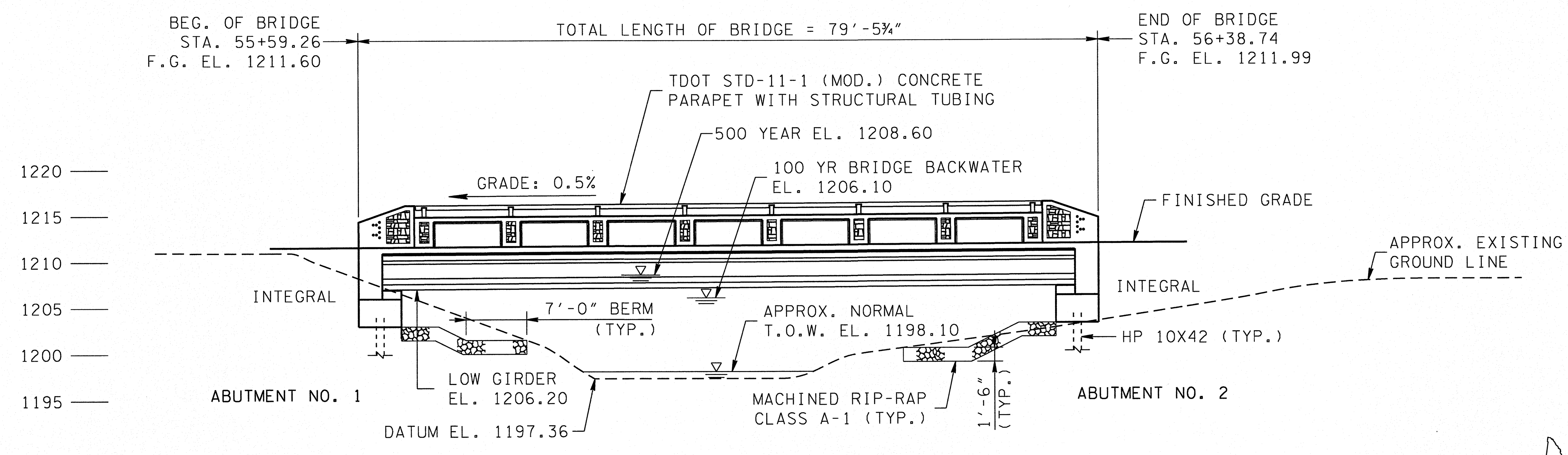

ELEVATION

SCALE: 1" = 10'-0"

HYDRAULIC DATA

DRAINAGE AREA = 1.2 SQ. MILES
DESIGN DISCHARGE (100 YEAR) = 1380 CFS
WATER AREA PROVIDED BELOW EL. 1206.20 = 445.06 SQ. FT.
100 YEAR VELOCITY = 4.45 FPS
100 YEAR BRIDGE BACKWATER = 0.01 FT. @ EL. 1206.10
ROADWAY OVERTOPPING EL. 1211.62
500 YEAR DISCHARGE = 2344 CFS @ EL. 1208.60

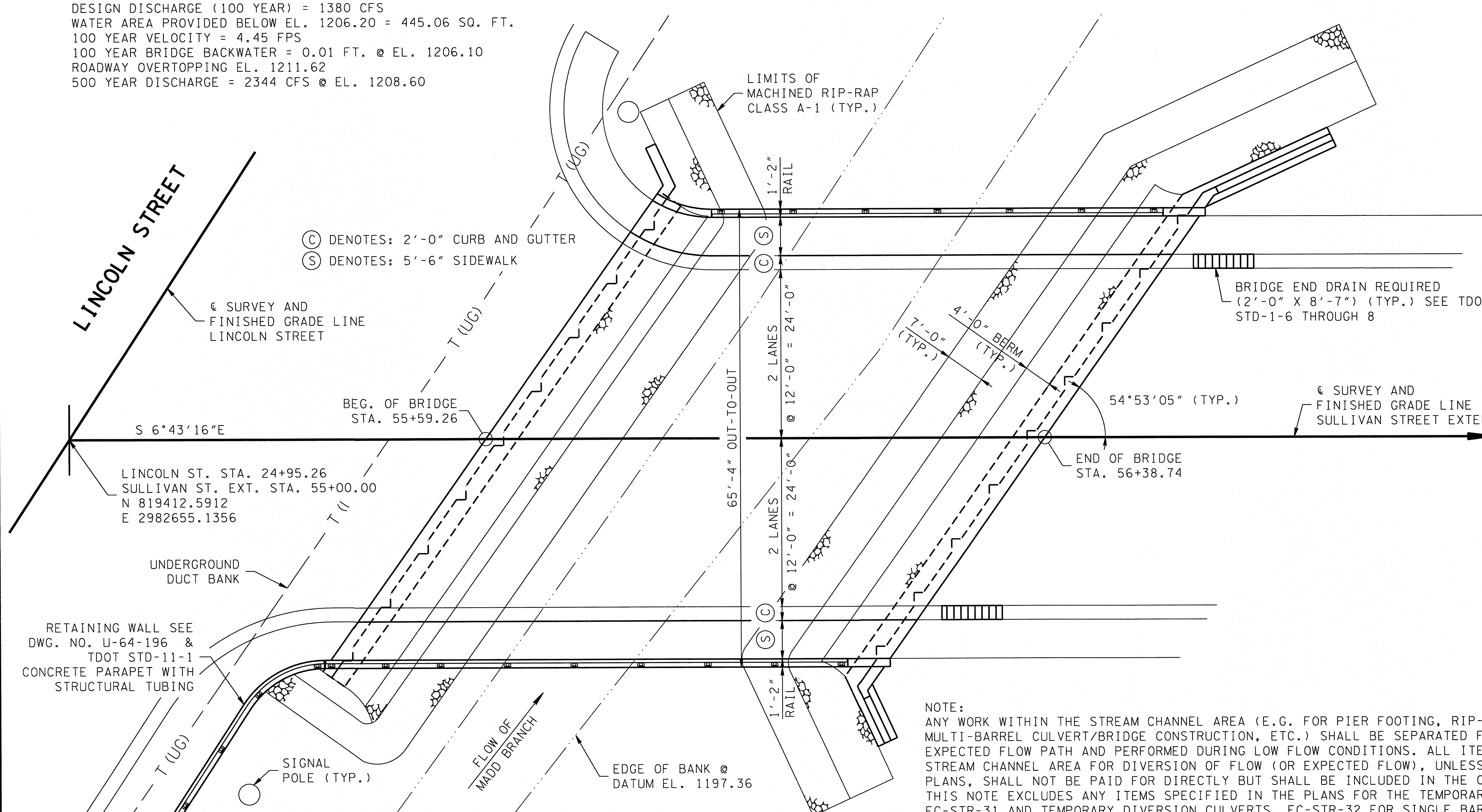

PLAN

SCALE: 1" = 10'-0"

NOTE:
ANY WORK WITHIN THE STREAM CHANNEL AREA (E.G. FOR PIER FOOTING, RIP-RAP PLACEMENT, MULTI-BARREL CULVERT/BRIDGE CONSTRUCTION, ETC.) SHALL BE SEPARATED FROM FLOWING WATER OR EXPECTED FLOW PATH AND PERFORMED DURING LOW FLOW CONDITIONS. ALL ITEMS USED WITHIN THE STREAM CHANNEL AREA FOR DIVERSION OF FLOW (OR EXPECTED FLOW), UNLESS SPECIFIED IN THE PLANS, SHALL NOT BE PAID FOR DIRECTLY BUT SHALL BE INCLUDED IN THE COST OF OTHER ITEMS. THIS NOTE EXCLUDES ANY ITEMS SPECIFIED IN THE PLANS FOR THE TEMPORARY DIVERSION CHANNELS, EC-STR-31 AND TEMPORARY DIVERSION CULVERTS, EC-STR-32 FOR SINGLE BARREL CULVERT CONSTRUCTION.

PROJECT NO.	YEAR	SHEET NO.
82956-3288-04	2014	50

REVISIONS

NO.	DATE	BY	BRIEF DESCRIPTION

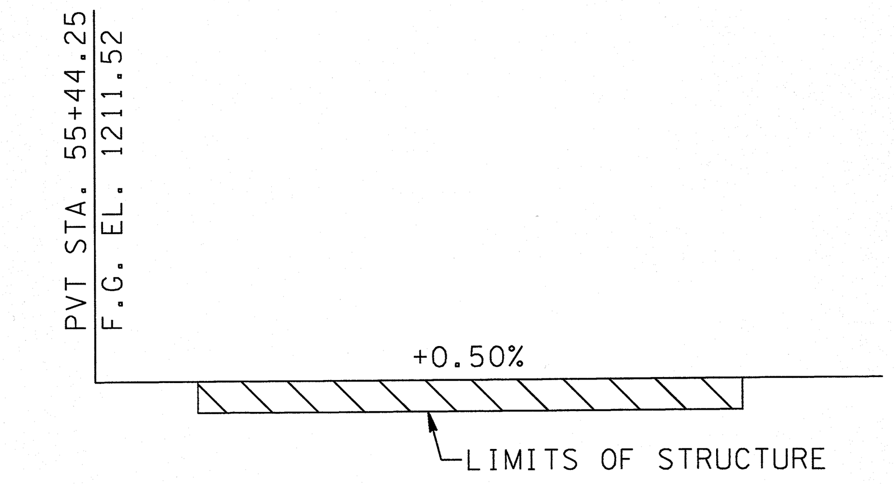

FINISHED GRADE SKETCH

LIST OF DRAWINGS	DWG. NO.	LAST REV. DATE
LAYOUT OF BRIDGE	U-64-183	
GENERAL NOTES & ESTIMATED QUANTITIES	U-64-184	
ENGINEERING GEOLOGY	U-64-185	
TRANSVERSE SECTION	U-64-186	
DECK PLAN AND ELEVATIONS	U-64-187	
FRAMING PLAN AND DETAILS	U-64-188	
BEAM DETAILS	U-64-189	
RAILING DETAILS	U-64-190	
ABUTMENT NO. 1	U-64-191	
ABUTMENT NO. 1 DETAILS	U-64-192	
ABUTMENT NO. 2	U-64-193	
ABUTMENT NO. 2 DETAILS	U-64-194	
ABUTMENT NO. 2 WINGWALLS	U-64-195	
RETAINING WALL	U-64-196	
FINAL FOUNDATION DATA	U-64-197	
BILL OF STEEL	U-64-198	

LIST OF STANDARD DRAWINGS	DWG. NO.	LAST REV. DATE
BRIDGE END DRAIN DETAILS 2'X8'-7" & 4'X8'-7" WITH PAVEMENT AT BRIDGE ENDS	STD-1-6	4-28-97
BRIDGE END DRAIN DETAILS 2'X8'-7" & 4'X8'-7" WITH PAVEMENT AT BRIDGE ENDS	STD-1-7	8-24-11
BRIDGE END DRAIN DETAILS 2'X8'-7" WITH PAVEMENT AT BRIDGE ENDS	STD-1-8	5-1-95
STD. PRECAST PRESTRESSED BRIDGE DECK PANELS GENERAL DETAILS	STD-4-1	4-8-05
STD. PRECAST PRESTRESSED BRIDGE DECK PANELS DESIGN CRITERIA	STD-4-2	4-8-05
STD. PRECAST PRESTRESSED BRIDGE DECK PANELS GENERAL DETAILS	STD-4-3	3-2-02
STD. PRECAST PRESTRESSED BRIDGE DECK PANELS CONSTRUCTION DETAILS	STD-4-4	6-10-96
STD. PILE DETAILS	STD	
STD. PILE DETAILS	STD	
STANDARD SEISMIC DETAILS	STD	
REINF. BAR SUPPORT DETAILS FOR CONC. SLABS	STD	
MISCELLANEOUS ABUTMENT & DRAINAGE DETAILS	STD-	
BRIDGE RAILING CONCRETE PARAPET WITH STRUCTURAL TUBING	STD-	
STD. DETAILS AND INTERMEDIATE DIAPHRAGM DETAILS FOR I-BEAMS	STD-	

UNOFFICIAL SET
NOT FOR BIDDING

2034 ADT = 900 VPD
52'-0" ROADWAY WITH 2 @ 5'-6" SIDEWALKS AND MODIFIED TDOT STD-11-1 PARAPETS
DESIGN SPEED = 20 MPH

CHAD M. THOMAS REGISTERED ENGINEER AGRICULTURE COMMERCE No. 117359 STATE OF TENNESSEE 6/20/14

STATE OF TENNESSEE
DEPARTMENT OF TRANSPORTATION

LAYOUT OF BRIDGE
SULLIVAN STREET EXT.
OVER MADD BRANCH
BR. I.D. NO. 82038860005
STATION 55+99.00
CITY OF KINGSPORT
SULLIVAN COUNTY
2014

DESIGNED BY	P. CARDWELL	DATE	05/2014
DRAWN BY	D. ALLEN	DATE	05/2014
SUPERVISED BY	C. THOMAS	DATE	05/2014
CHECKED BY	C. THOMAS	DATE	06/2014

$$$$SYTIME$$$$$
$$$$DGNSPEC$$$$

U-64-183

GENERAL NOTES

SPECIFICATIONS: STANDARD ROAD AND BRIDGE SPECIFICATIONS OF THE TENNESSEE DEPARTMENT OF TRANSPORTATION (MARCH 1, 2006 EDITION)

LOADING: HL-93 LIVE LOADING; DEAD LOAD INCLUDES 35 LB/SQ. FT. FOR FUTURE WEARING SURFACE; SEISMIC ZONE 1 WITH AS= 0.132, SDS= 0.258, SD1= 0.103, (1000 YEAR RETURN PERIOD).

DESIGN SPECIFICATIONS: AASHTO LRFD SIXTH EDITION, 2012, WITH INTERIMS, AND THE 2011 AASHTO GUIDE SPECIFICATIONS FOR LRFD SEISMIC BRIDGE DESIGN, SECOND EDITION (WITH INTERIMS.)

CONCRETE: CLASS "A" f'c = 3000 PSI, BRIDGE DECK CLASS "D" f'c = 4000 PSI. CONCRETE SHALL BE IN ACCORDANCE WITH SECTION 604 OF THE STANDARD SPECIFICATIONS.

VALUE ENGINEERING ALTERNATE BRIDGE DESIGN CRITERIA: ALTERNATE BRIDGE PROPOSALS MAY NOT DIMINISH THE FUNCTIONAL OR STRUCTURAL EQUIVALENCY OF THE BRIDGE AND MUST MEET OR EXCEED BOTH THE SERVICE LEVEL AND ULTIMATE CAPACITIES OF THE CONTRACT PLANS STRUCTURE. ADDITIONALLY, THE WATERWAY OPENING AND FLOOD CLEARANCES MAY NOT BE REDUCED.

THESE PLANS ARE INCOMPLETE UNLESS ACCOMPANIED BY THE SUPPLEMENTAL SPECIFICATIONS AND SPECIAL PROVISIONS INCLUDED IN THE CONTRACT DOCUMENTS.

BRIDGE DECK FORMS: BRIDGE DECK FORMS FOR CONCRETE DECK SHALL BE CONSTRUCTED USING EITHER REMOVABLE FORMS OR PERMANENT FORMS. PERMANENT FORMS MAY BE EITHER REMAIN-IN-PLACE STEEL OR PRECAST, PRESTRESSED CONCRETE PANELS. IN EITHER CASE, FORMS SHALL BE ATTACHED BY MEANS OTHER THAN WELDING TO MAIN STRUCTURAL MEMBERS OR REINFORCING STEEL. TEMPORARY ERECTION DIAPHRAGMS MUST BE USED AT THE ENDS OF PRECAST CONCRETE GIRDERS WHERE END DIAPHRAGMS, SUPPORT DIAPHRAGMS, OR ABUTMENT BACKWALLS ARE TO BE POURED CONCURRENTLY WITH THE DECK AND SHALL BE PROVIDED ELSEWHERE IN ACCORDANCE WITH THE SPECIFICATIONS TO PREVENT GIRDER ROTATION. SEE TDOT STANDARD DRAWINGS STD-4-1 THROUGH 4, STD-14-2 AND ARTICLE 604.05 OF THE STANDARD SPECIFICATIONS.

REINFORCING STEEL: SHALL CONFORM TO ASTM A615 GRADE 60 UNLESS NOTED OTHERWISE. SEE SECTIONS 604 AND 907 OF THE STANDARD SPECIFICATIONS.

BRIDGE DECK SURFACE FINISH: TO BE IN ACCORDANCE WITH NOTE A IN ARTICLE 604.22 OF THE STANDARD SPECIFICATIONS.

FINISHING CONCRETE STRUCTURES: CONCRETE FINISHING SHALL BE IN ACCORDANCE WITH SECTION 604.21 OF THE TENNESSEE STANDARD SPECIFICATIONS. A CLASS I FINISH FOLLOWED BY AN APPLIED TEXTURE FINISH SHALL BE USED IN LIEU OF A CLASS II FINISH. NO TEXTURE FINISH SHALL BE APPLIED PRIOR TO COMPLETION OF PAVING AND HAULING OPERATIONS AT THE BRIDGE SITE. THE APPLIED TEXTURE FINISH SHALL BE MEASURED AND PAID FOR UNDER ITEM 604-04.01

THE LOCATION OF UTILITIES, INCLUDING UNDERGROUND UTILITIES, IS INDICATED ON THE DRAWINGS INSOFAR AS THEIR EXISTENCE AND LOCATION WERE KNOWN AT THE TIME OF PREPARATION OF THE DRAWINGS. HOWEVER, NOTHING IN THESE CONTRACT DOCUMENTS SHALL BE CONSTRUED AS A GUARANTEE THAT SUCH UTILITIES ARE IN THE LOCATION INDICATED OR THAT THEY ACTUALLY EXIST, OR THAT OTHER UTILITIES ARE NOT WITHIN THE AREA OF OPERATIONS.

THE CONTRACTOR SHALL MAKE NECESSARY INVESTIGATIONS TO DETERMINE THE EXISTENCE AND LOCATIONS OF SUCH UTILITIES. THE CONTRACTOR SHALL PAY FOR ANY DAMAGE TO AND FOR MAINTENANCE OF PROTECTION OF EXISTING UTILITIES AND STRUCTURES INCLUDING WATER SERVICES, SEWER LATERALS, TELEPHONE, POWER, AND FIBER OPTIC LINES.

RIP-RAP: MACHINED RIP-RAP SHALL BE CLASS "A-1" IN ACCORDANCE WITH SECTION 709 OF THE STANDARD SPECIFICATIONS AND SHALL BE MEASURED AND PAID FOR UNDER ROADWAY ITEM 709-05.06

PILES: TO BE HP10X42 EMBEDDED A MINIMUM OF 4'-0" INTO COMPETENT ROCK (AS DETERMINED BY THE GEOTECHNICAL ENGINEER IN THE FIELD) AND HAVE A MINIMUM LENGTH OF 10'-0". HOLES FOR PILES SHALL BE CORED AND CASED WITH A DIAMETER OF 2'-0". AFTER PILES ARE PLACED CORED HOLES SHALL BE FILLED WITH CONCRETE.

BRIDGE RAIL SYSTEM: CONSTRUCT BRIDGE RAILINGS ACCORDING TO TDOT STANDARD DRAWING STD-11-1 WITH THE MODIFICATIONS SHOWN HEREIN. THE RAILING SHALL BE FORMED AND CAST PLUMB, NOT PERPENDICULAR TO THE SLAB. THE DIMENSIONS AT THE TRAFFIC FACE SHALL BE CONSTANT, WITH VARIATION DUE TO CROSS SLOPE ACCOMMODATED AT THE REAR FACE.

SHOP DRAWINGS: SEE SECTION 105.02 OF THE STANDARD SPECIFICATIONS.

THE CONTRACTOR SHALL PROVIDE 100% CONVENTIONAL FALL PROTECTION FOR WORKERS INSTALLING DECKING ABOVE 15 FEET.

ALL NORTH ARROWS SHOWN ON PLANS REPRESENT TRUE NORTH.

PROJECT NO.	YEAR	SHEET NO.
82956-3288-04	2014	51

REVISIONS

NO.	DATE	BY	BRIEF DESCRIPTION

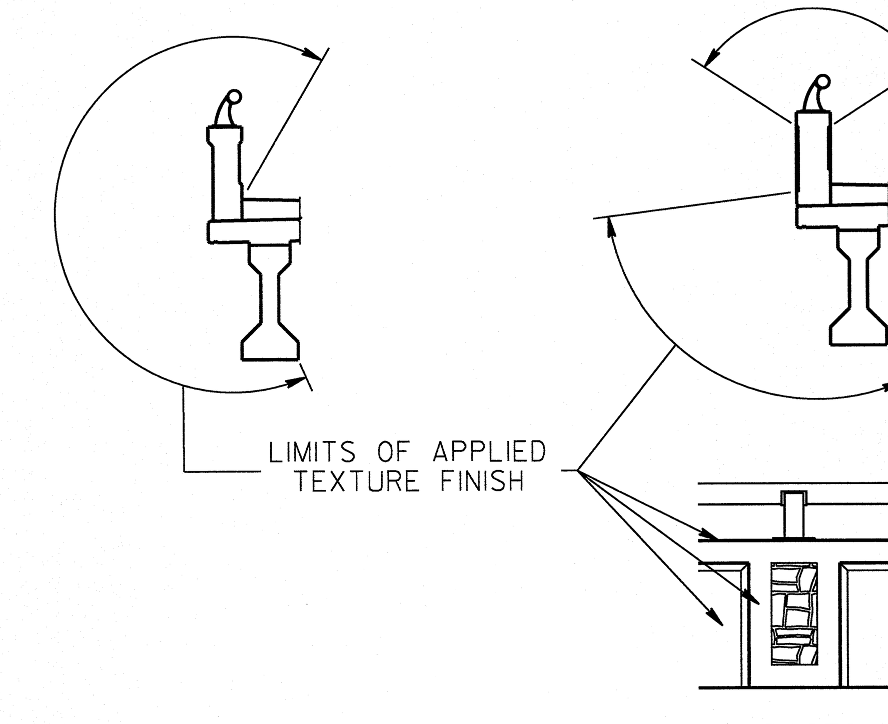

NOTE: ALL APPLIED TEXTURE FINISH COLORS SHALL BE SELECTED BY OWNER.

APPLIED TEXTURE FINISH SKETCHES

(NOT TO SCALE)

APPLIED TEXTURE FINISH NOTES

THE CONTRACTOR SHALL USE CONTAINMENT SCREENS OR OTHER MEASURES AS NECESSARY TO PREVENT ANY TEXTURE COATING FROM ENTERING THE ENVIRONMENT. CONTAINMENT MEASURES SHALL BE APPROVED BY THE ENGINEER AND COST SHALL BE INCLUDED IN ITEMS BID ON.

THE EXISTING SURFACES THAT ARE TO RECEIVE A TEXTURE FINISH SHALL BE FREE OF ALL EFFLORESCENCE, FLAKING, COATING, RUST, DIRT, OIL, MOLD AND OTHER FOREIGN SUBSTANCES. THESE SURFACES SHALL BE CLEANED TO THE SATISFACTION OF THE ENGINEER USING A HIGH PRESSURE WASH. COST TO BE INCLUDED IN ITEM NO. 620-05, CONCRETE PARAPET WITH STRUCTURAL TUBING, L.F.

THE WASTE WATER FROM THE PRESSURE WASHING OPERATION SHALL BE COLLECTED AND FILTERED. THE COLLECTED WASTE WATER SHALL NOT BE RELEASED INTO THE ENVIRONMENT UNTIL IT IS CLEAR. ALL SOLID DEBRIS FROM THE PRESSURE WASHING OPERATION SHALL BE COLLECTED AND DISPOSED OF IN AN APPROPRIATE MANNER.

ESTIMATED BRIDGE QUANTITIES

NOTES	ITEM NO.	DESCRIPTION	UNIT	TOTAL	SUPERSTRUCTURE	ABUTMENT 1	ABUTMENT 2
(1)(2)	204-02.01	DRY EXCAVATION (BRIDGES)	C.Y.	150		120	30
	204-04.01	ROCK EXCAVATION (BRIDGES)	C.Y.	15		7	8
(3)	204-14	CORE DRILLING FOR PILES (ROCK)	L.F.	146		78	68
(3)	204-15	CORE DRILLING FOR PILES (SOIL)	L.F.	201		42	159
(2)(4)	303-01.02	GRANULAR BACKFILL (BRIDGES)	TON	120		65	55
(2)	604-02.03	EPOXY COATED REINFORCING STEEL	LB.	34501	31161	1641	1699
(2)	604-03.01	CLASS A CONCRETE (BRIDGES)	C.Y.	82		36	46
(12)(2)	604-03.02	STEEL BAR REINFORCEMENT (BRIDGES)	LB.	16474	693	7080	8701
(5)	604-03.09	CLASS D CONCRETE (BRIDGE DECK)	C.Y.	173	173		
	604-03.31	CLASS D CONCRETE (ABUTMENTS)	C.Y.	64		31	33
	604-04.01	APPLIED TEXTURE FINISH (NEW STRUCTURES)	S.Y.	257	234	5	18
	604-04.03	BRIDGE END DRAIN (2'-0" X 8'-7")	EACH	2	2		
(9)	604-07.30	RETAINING WALL (LINCOLN STREET)	L.F.	356			
	606-02.03	STEEL PILES (10 INCH)	L.F.	379		132	247
(6)	615-01.03	PRESTRESSED CONCRETE I-BEAM (TYPE III)	L.F.	670	670		
(10)(7)	620-05	CONCRETE PARAPET WITH STRUCTURAL TUBING	L.F.	516	160		
	621-05.01	TEMPORARY SHORING	S.F.	1600			
(11)	710-09.01	6" PERFORATED PIPE WITH VERTICAL DRAIN SYSTEM	L.F.	196		87	109
	710-09.02	6" PIPE UNDERDRAIN	L.F.	20		8	12

(1) EXCAVATION BASED ON EXISTING GROUND.

(2) THIS ITEM DOES NOT INCLUDE LABOR, MATERIALS, OR EQUIPMENT NECESSARY FOR THE RETAINING WALL. THE RETAINING WALL SHALL BE PAID FOR AT THE UNIT PRICE BID FOR ITEM NUMBER 604-07.30.

(3) THIS ITEM INCLUDES ALL LABOR, MATERIALS, AND EQUIPMENT NECESSARY FOR CASING OPERATIONS AND PLACEMENT OF CONCRETE IN CASED HOLES FOR STEEL PILES.

(4) GRANULAR BACKFILL SHALL BE CLASS "A" GRADING "D" MATERIAL. SEE STANDARD DRAWING STD-10-1.

(5) THIS ITEM INCLUDES ALL LABOR, MATERIALS, AND EQUIPMENT NECESSARY TO PLACE CONCRETE FOR THE DECK, DIAPHRAGMS, AND SIDEWALKS, INCLUDING STAY-IN-PLACE DECK FORMS.

(6) COST OF ELASTOMERIC PADS, RUBBER BONDING CEMENT, AND THREADED INSERTS TO BE INCLUDED IN THE UNIT PRICE FOR THE PRESTRESSED CONCRETE I-BEAM.

(7) THIS ITEM INCLUDES ALL LABOR, MATERIALS, AND EQUIPMENT NECESSARY TO CONSTRUCT THE BRIDGE RAILING SYSTEM (TDOT STD-11-1) WITH THE MODIFICATIONS SHOWN HEREIN.

(8) COST OF ALL MISCELLANEOUS JOINT MATERIAL TO BE INCLUDED IN THE UNIT PRICE BID FOR OTHER ITEMS.

(9) SEE SHEET 5D AND DWG NO. U-64-196 FOR DETAILS.

(10) INCLUDES 356 L.F. OF CONCRETE PARAPET AT LINCOLN STREET RETAINING WALL LOCATIONS.

(11) COST OF POLYETHYLENE SHEETING AND ALL MISCELLANEOUS ITEMS NECESSARY FOR INSTALLATION TO BE INCLUDED IN THE UNIT PRICE BID FOR PERFORATED PIPE.

(12) COST OF ¾"Ø THREADED RODS IN THE DIAPHRAGMS SHALL BE INCLUDED IN THE UNIT PRICE BID FOR THIS ITEM.

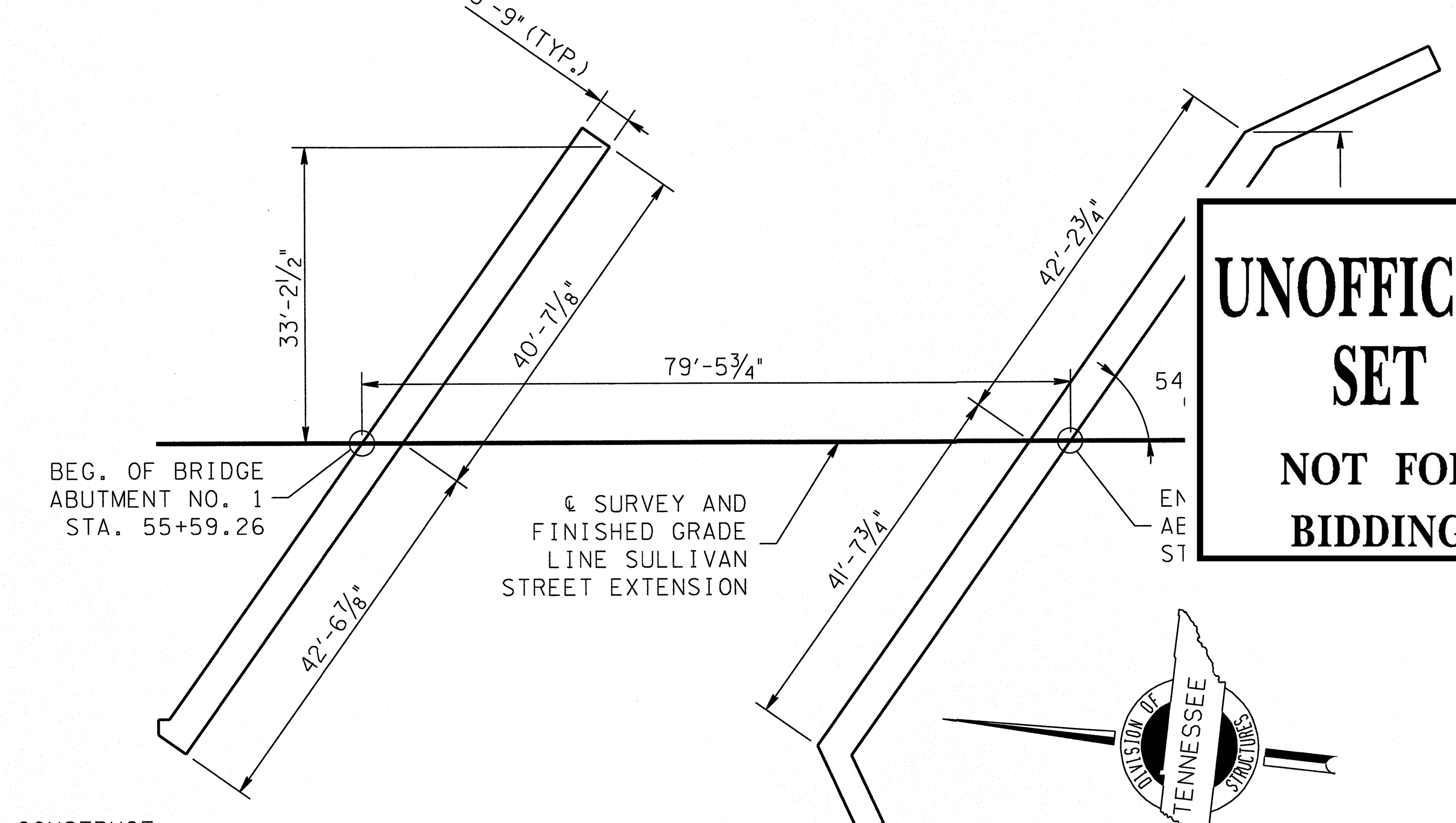

SUBSTRUCTURE LAYOUT

(NOT TO SCALE)

UNOFFICIAL SET

NOT FOR BIDDING

DESIGNED BY P. CARDWELL DATE 05/2014
DRAWN BY D. ALLEN DATE 05/2014
SUPERVISED BY C. THOMAS DATE 05/2014
CHECKED BY C. THOMAS DATE 06/2014

CHAD M. THOMAS REGISTERED ENGINEER No. 117359 STATE OF TENNESSEE 6/20/14

STATE OF TENNESSEE
DEPARTMENT OF TRANSPORTATION

GENERAL NOTES AND ESTIMATED QUANTITIES
SULLIVAN STREET EXT.
OVER MADD BRANCH
BR. I.D. NO. 82038860005
STATION 55+99.00
CITY OF KINGSPORT
SULLIVAN COUNTY
2014

U-64-184

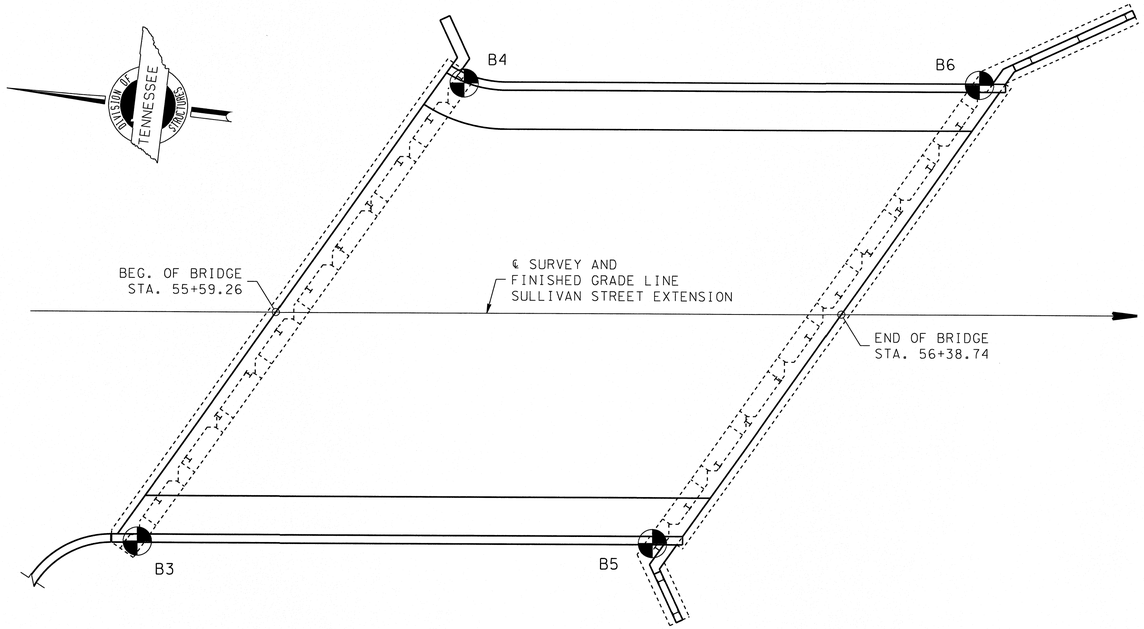

PLAN
NOT TO SCALE

BORING NO. 3 — ABUTMENT NO. 1

STATION: 55+39.92 — OFFSET: 32.5 FT RT
LATITUDE: XX.X oN — LONGITUDE: XX.X oW
SURFACE ELEVATION: 1211.0 FT — COORD. DATUM: XXX

FIELD DATA — DATE(S) DRILLED: 2/7/14
DRILLING METHOD(S): 3¼" H.S.A.
DRILL RIG: CME 55
OTHER TEST(S)
DRILLER: TILLERY
LOGGER: KCD

GROUND WATER

DEPTH (FT)	ELEVATION (FT)	STANDARD PENETRATION TEST HAMMER BLOWS	SAMPLE INTERVAL	CORE RECOVERY (%)	FIELD DESCRIPTION OF STRATA
					ASPHALT (0.9') AND BASESTONE (0.6')
		3	3.5		FILL OR ALLUVIUM- SOFT GRAY SANDY SILTY CLAY
5	1206.0		5		
		8	6		ALLUVIUM-SOFT GRAY SANDY SILTY CLAY
			7.5		
		50/.3	8.5		ALLUVIUM-LOOSE, WET, BROWN TO GRAY SILTY SAND AND COBBLES
10	1201.0		10		
					RESIDUUM-VERY HARD BROWN TO GRAY WEATHERED SILTY SHALE
					AUGER REFUSAL AT 10.5 FEET
15	1196.0		3	72	MODERATELY HARD TO HARD GRAY SHALE WITH CALCITE FILLED VEINS NOTE UPPER 2.5 FEET HIGHLY WEATHERED AND FRACTURED
20	1191.0				
					BORING TERMINATED AT 20.5 FEET

LAB DATA: LIQUID LIMIT (LL), PLASTICITY INDEX (PI), MOISTURE CONTENT (%)

REMARKS:

PROJECT NO.	YEAR	SHEET NO.
82956-3288-04	2014	52

REVISIONS

NO.	DATE	BY	BRIEF DESCRIPTION

BORING NO. 4 — ABUTMENT NO. 1

STATION: 55+85.63 — OFFSET: 32.5 FT LT
LATITUDE: XX.X oN — LONGITUDE: XX.X oW
SURFACE ELEVATION: 1211.0 FT — COORD. DATUM: XXX

FIELD DATA — DATE(S) DRILLED: 2/07/2014
DRILLING METHOD(S): 3¼" H.S.A.
DRILL RIG: CME 55
OTHER TEST(S)
DRILLER: TILLERY
LOGGER: KCD

GROUND WATER

DEPTH (FT)	ELEVATION (FT)	STANDARD PENETRATION TEST HAMMER BLOWS	SAMPLE INTERVAL	FIELD DESCRIPTION OF STRATA
				ASPHALT (1.2') AND BASETONE (0.4')
		12	3.5	FILL OR ALLUVIUM- STIFF GRAY SILTY CLAY
5	1206.0		5.0	
		21	6.0	
			7.5	RESIDUUM- VERY STIFF BROWN TO GRAY HIGHLY WEATHERED SHALE
		54	8.5	
10	1201.0		10.0	
				RESIDUUM- VERY HARD GRAY WEATHERED SILTY SHALE

LAB DATA: LIQUID LIMIT (LL), PLASTICITY INDEX (PI), MOISTURE CONTENT (%)

REMARKS:

BORING NO. 5 — ABUTMENT NO. 2

STATION: 56+12.37 — OFFSET: 32.5 FT RT
LATITUDE: XX.X oN — LONGITUDE: XX.X oW
SURFACE ELEVATION: 1207.0 FT — COORD. DATUM: XXX

FIELD DATA — DATE(S) DRILLED: 2/08/2014
DRILLING METHOD(S): 3¼" H.S.A.
DRILL RIG: CME 55
OTHER TEST(S)
DRILLER: TILLERY
LOGGER: KCD

GROUND WATER

DEPTH (FT)	ELEVATION (FT)	STANDARD PENETRATION TEST HAMMER BLOWS	SAMPLE INTERVAL	CORE RECOVERY (%)	FIELD DESCRIPTION OF STRATA
		11	1.5		TOPSOIL AND GRASS
		19	2.5		FILL- FIRM BROWN TO TAN SILTY CLAY WITH ROCK FRAGMENTS
5	1202.0	2	4.0		
			5.5		ALLUVIUM- VERY SOFT GRAY TO BLACK SILTY CLAY
		14	6.5		
			8.0		RESIDUUM- STIFF BROWN TO GRAY SILTY CLAY WITH WEATHERED SHALE
		50/.3	9.0		
10	1197.0		9.75		RESIDUUM- HARD GRAY WEATHERED SHALE
					AUGER REFUSAL AT 10 FEET
15	1192.0			75%	
20	1187.0				
					BORING TERMINATED AT 20 FEET

LAB DATA: LIQUID LIMIT (LL), PLASTICITY INDEX (PI), MOISTURE CONTENT (%)

REMARKS:

BORING NO. 6 — ABUTMENT NO. 2

STATION: 56+58.08 — OFFSET: 32.5 FT LT
LATITUDE: XX.X oN — LONGITUDE: XX.X oW
SURFACE ELEVATION: 1203.4 ft — COORD. DATUM: XXX

FIELD DATA — DATE(S) DRILLED: 2/07/2014
DRILLING METHOD(S):
DRILL RIG: HAND AUGER
OTHER TEST(S)
DRILLER: XXX
LOGGER: KCD

GROUND WATER

DEPTH (FT)	ELEVATION (FT)	FIELD DESCRIPTION OF STRATA
		TOPSOIL AND GRASS
		FILL-FIRM BROWN TO TAN SILTY CLAY WITH GRAVEL
		AUGER REFUSAL AT 3.5 FEET
		BORING TERMINATED AT 3.5 FEET
		NOTE: AUGER REFUSAL ASSUMED TO BE THE RESULT OF ROCK FRAGMENTS OR COBBLES AND NOT RESIDUAL BEDROCK

LAB DATA: LIQUID LIMIT (LL), PLASTICITY INDEX (PI), MOISTURE CONTENT (%)

REMARKS:

UNOFFICIAL SET
NOT FOR BIDDING

CHAD M. THOMAS — REGISTERED ENGINEER — COMMERCE — NO. 117359 — STATE OF TENNESSEE — 6/26/14

STATE OF TENNESSEE
DEPARTMENT OF TRANSPORTATION

ENGINEERING GEOLOGY
SULLIVAN STREET EXT.
OVER MADD BRANCH
BR. I.D. NO. 82038860005
STATION 55+99.00
CITY OF KINGSPORT
SULLIVAN COUNTY
2014

DESIGNED BY	P. CARDWELL	DATE	05/2014
DRAWN BY	D. ALLEN	DATE	05/2014
SUPERVISED BY	C. THOMAS	DATE	05/2014
CHECKED BY	C. THOMAS	DATE	06/2014

U-64-185

$$$$SYTIME$$$$$$$
$$$$DGNSPEC$$$$$$$

PROJECT NO.	YEAR	SHEET NO.
82956-3288-04	2014	53

REVISIONS

NO.	DATE	BY	BRIEF DESCRIPTION

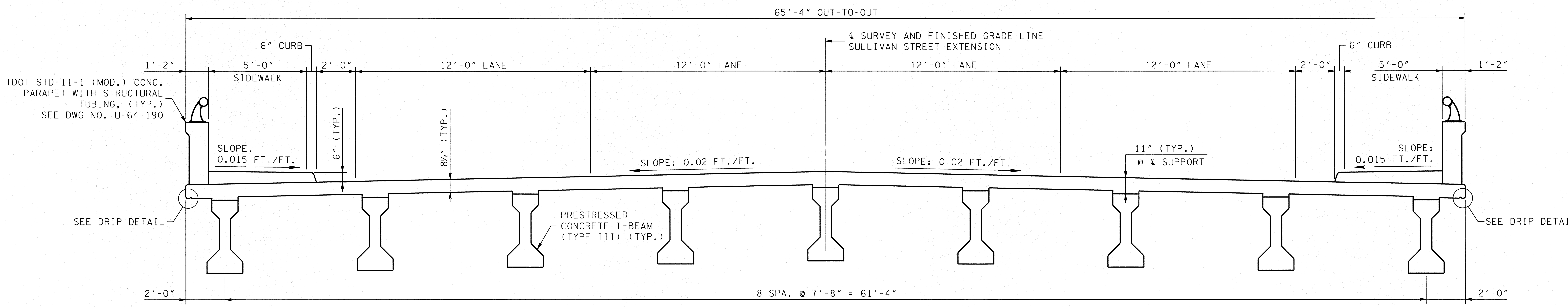

TRANVERSE SECTION

SCALE: 3/8" = 1'-0"

(LOOKING FORWARD ON SURVEY)

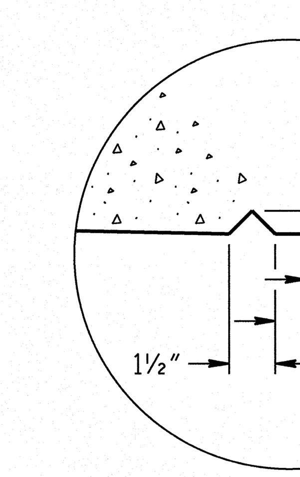

DRIP DE[TAIL]

NOT TO [SCALE]

UNOFFICIAL SET

NOT FOR BIDDING

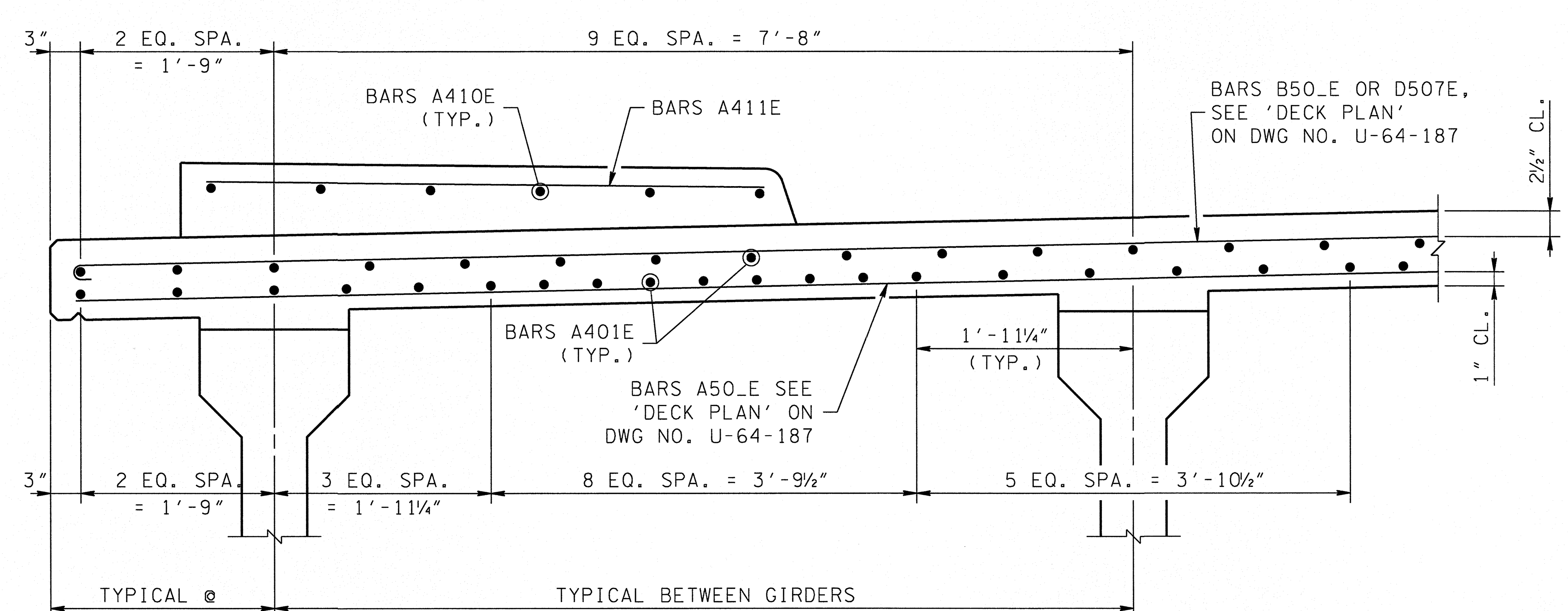

PART SECTION AT MIDSPAN

NOT TO SCALE

NOTE: RAILING NOT SHOWN FOR CLARITY

ESTIMATED QUANTITIES		
EPOXY COATED REINFORCING STEEL LB.	CLASS D CONCRETE (BRIDGE DECK) C.Y.	STEEL BAR REINFORCEMENT LB.
31,161	173	693

NOTE: SEE DWG NO. U-64-188 FOR 'STEEL BAR REINFORCEMENT' SHOWN IN DIAPHRAGMS FOR SUPERSTRUCTURE.

DESIGNED BY	P. CARDWELL	DATE	05/2014
DRAWN BY	D. ALLEN	DATE	05/2014
SUPERVISED BY	C. THOMAS	DATE	05/2014
CHECKED BY	C. THOMAS	DATE	06/2014

CHAD M. THOMAS REGISTERED ENGINEER AGRICULTURE COMMERCE No. 117359 STATE OF TENNESSEE 10/20/14

STATE OF TENNESSEE
DEPARTMENT OF TRANSPORTATION

TRANSVERSE SECTION
SULLIVAN STREET EXT.
OVER MADD BRANCH
BR. I.D. NO. 82038860005
STATION 55+99.00
CITY OF KINGSPORT
SULLIVAN COUNTY
2014

U-64-186

$$$$SYTIME$$$$$$
$$$$DGNSPEC$$

NOTES:

WHEN POURING THE SLAB, PROVISIONS SHALL BE MADE FOR SETTING THE REINFORCING STEEL FOR THE BRIDGE PARAPET.

THE PARAPETS AND SIDEWALKS SHALL NOT BE POURED UNTIL THE SLAB IS POURED, HAS CURED, AND FALSEWORK HAS BEEN REMOVED.

WHEN POURING PARAPET, PROVISIONS SHALL BE MADE FOR SETTING ANCHOR BOLTS FOR PARAPET RAILS. SEE ALSO TDOT STD-11-1.

CONTRACTOR SHALL FIELD BEND BARS A410E IN DOWNSTREAM SIDEWALK. PROVIDE 1'-4" MIN. LAP.

PROJECT NO.	YEAR	SHEET NO.
82956-3288-04	2014	54

REVISIONS

NO.	DATE	BY	BRIEF DESCRIPTION

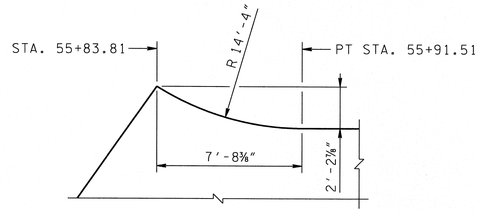

DETAIL A
NOT TO SCALE

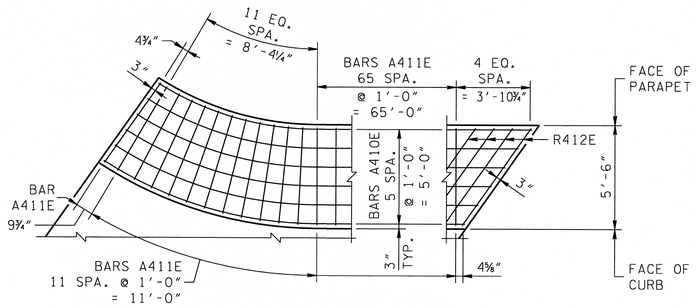

DOWNSTREAM SIDEWALK
NOT TO SCALE

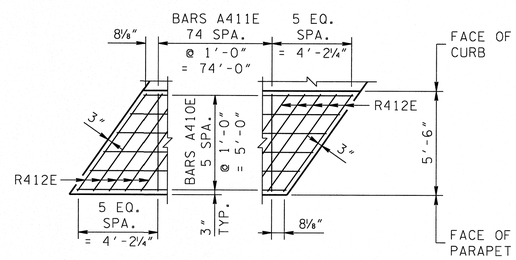

UPSTREAM SIDEWALK
NOT TO SCALE

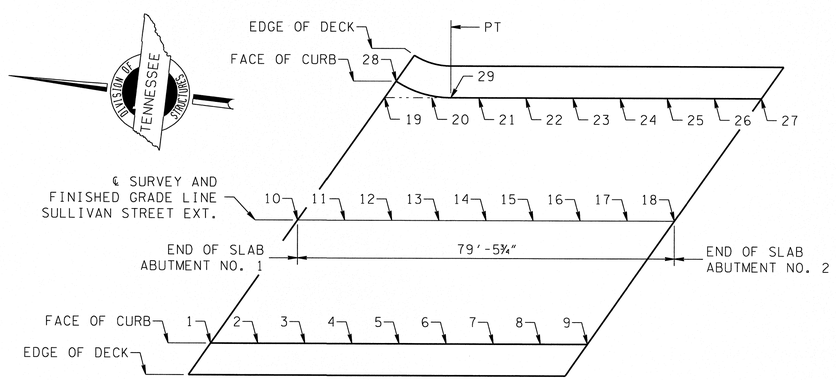

DECK SLAB ELEVATIONS
NOT TO SCALE

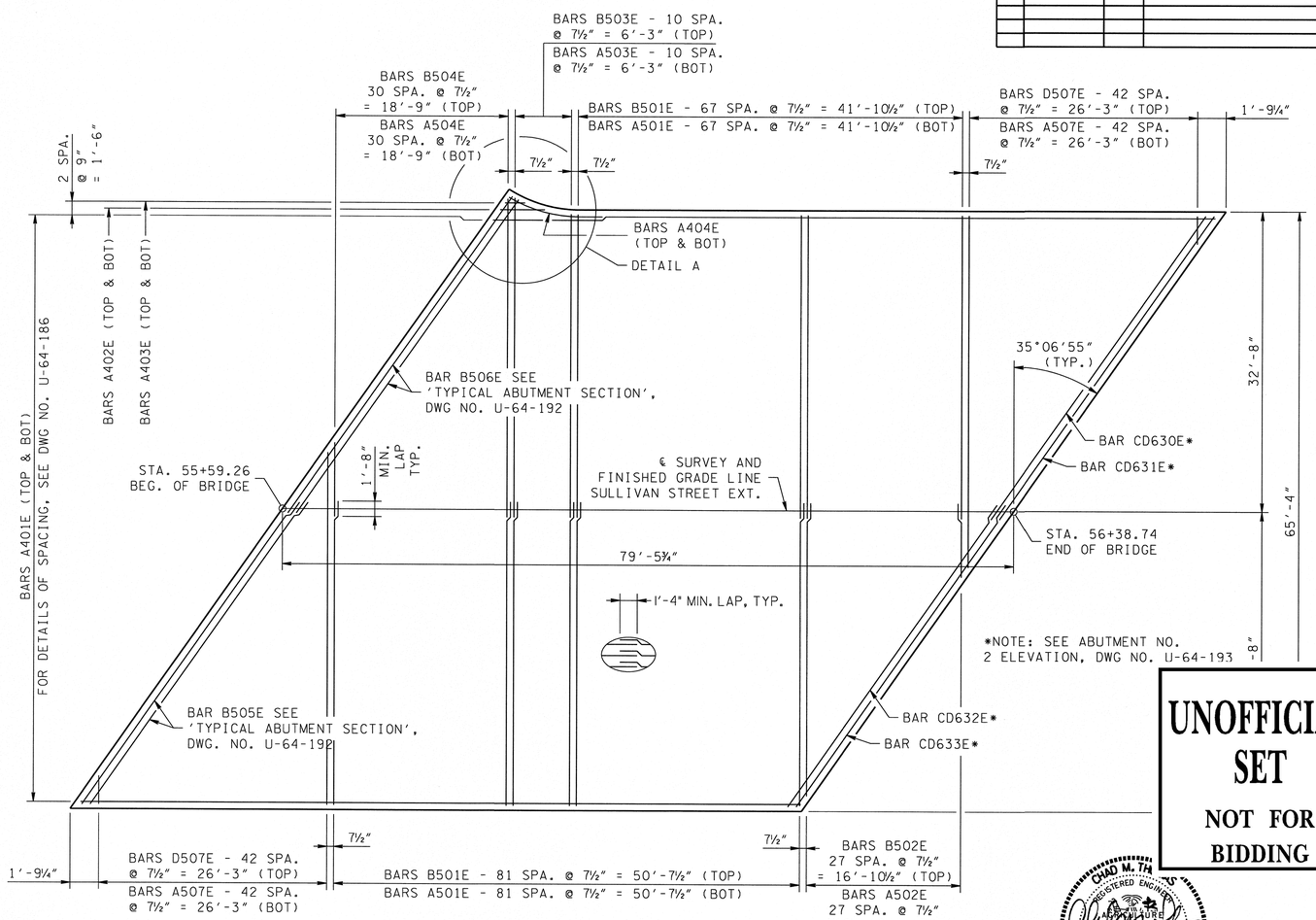

DECK PLAN
SCALE: ⅛" = 1'-0"

UNOFFICIAL SET

NOT FOR BIDDING

DECK ELEVATIONS

POINT	STATION	ELEVATION	POINT	STATION	ELEVATION	POINT	STATION	ELEVATION
1	55+40.98	1210.99	10	55+59.26	1211.60	19	55+77.55	1211.17
2	55+50.91	1211.03	11	55+69.20	1211.64	20	55+87.48	1211.22
3	55+60.85	1211.08	12	55+79.13	1211.69	21	55+97.42	1211.27
4	55+70.78	1211.13	13	55+89.07	1211.74	22	56+07.35	1211.32
5	55+80.72	1211.18	14	55+99.00	1211.79	23	56+17.28	1211.37
6	55+90.65	1211.23	15	56+08.93	1211.84	24	56+27.22	1211.41
7	56+00.59	1211.28	16	56+18.87	1211.89	25	56+37.15	1211.46
8	56+10.52	1211.33	17	56+28.80	1211.94	26	56+47.09	1211.51
9	56+20.45	1211.38	18	56+38.74	1211.99	27	56+57.02	1211.56
						28	55+79.97	1211.11
						29	55+91.51	1211.24

CHAD M. THOMAS REGISTERED ENGINEER No. 117359 COMMERCE STATE OF TENNESSEE 6/26/14

STATE OF TENNESSEE
DEPARTMENT OF TRANSPORTATION

DECK PLAN AND ELEVATIONS
SULLIVAN STREET EXT.
OVER MADD BRANCH
BR. I.D. NO. 82038860005
STATION 55+99.00
CITY OF KINGSPORT
SULLIVAN COUNTY
2014

DESIGNED BY	P. CARDWELL	DATE	05/2014
DRAWN BY	D. ALLEN	DATE	05/2014
SUPERVISED BY	C. THOMAS	DATE	05/2014
CHECKED BY	C. THOMAS	DATE	06/2014

$$$$SYTIME$$$$$$
$$$$DGNSPEC$$$$$$

NOTES:

1. FOR BEAM DETAILS AND NOTES, SEE DWG NO. U-64-189

2. THE CONTRACTOR IS SOLELY RESPONSIBLE FOR SUPPORTING THE BEAMS TO PREVENT DAMAGE DUE TO TWISTING OR OVERTURNING DURING ALL PHASES OF CONSTRUCTION. IT IS STRONGLY RECOMMENDED THAT THE TEMPORARY ERECTION DIAPHRAGMS BE POURED AND CURED PRIOR TO PLACING ANY LOADS ON GIRDERS. HOWEVER, TEMPORARY ERECTION DIAPHRAGMS AND PERMANENT INTERMEDIATE DIAPHRAGMS MUST BE IN PLACE IN THE SPAN AT THE TIME THE SLAB IS POURED.

PROJECT NO.	YEAR	SHEET NO.
82956-3288-04	2014	55

REVISIONS

NO.	DATE	BY	BRIEF DESCRIPTION

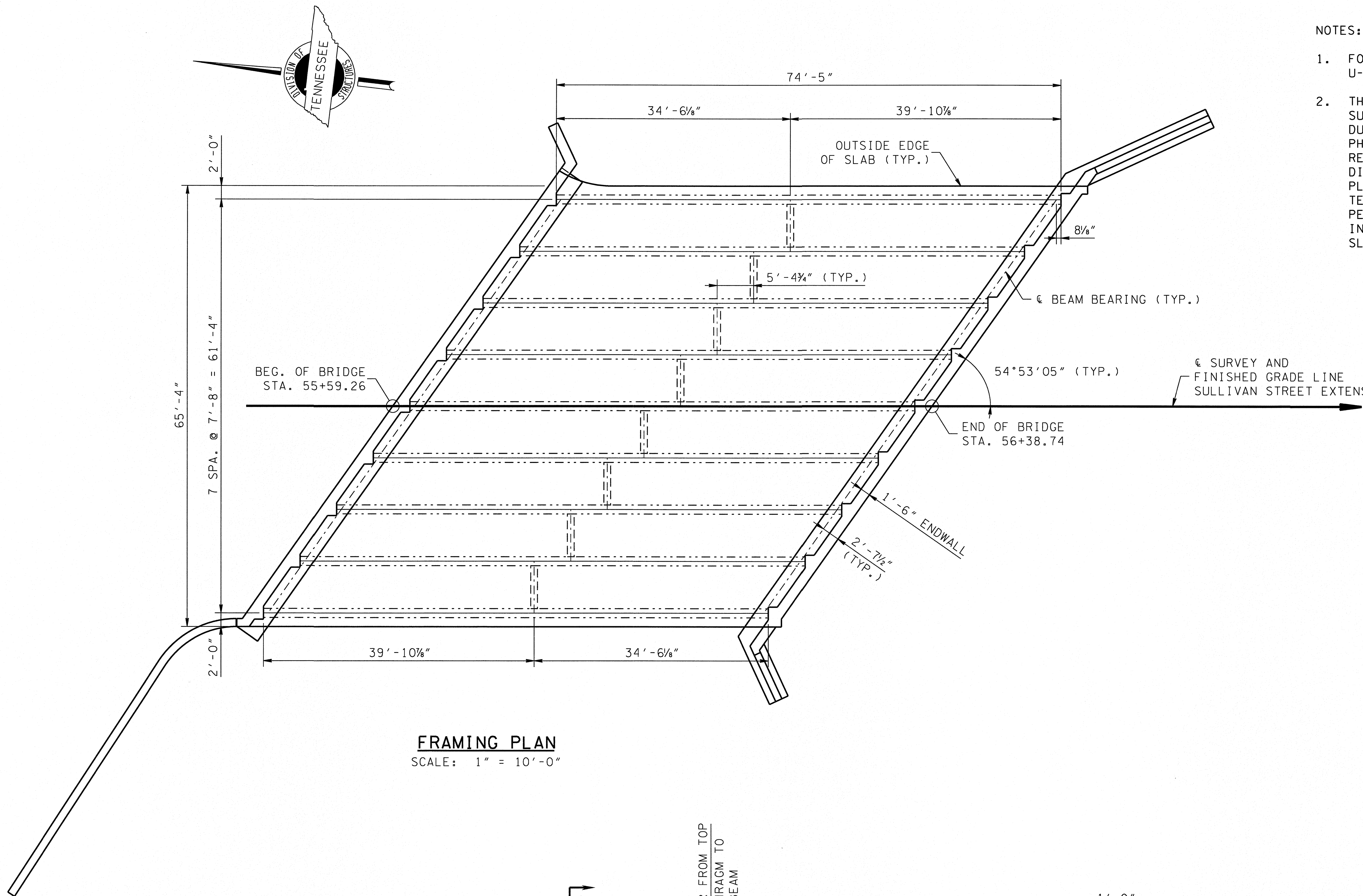

FRAMING PLAN

SCALE: 1" = 10'-0"

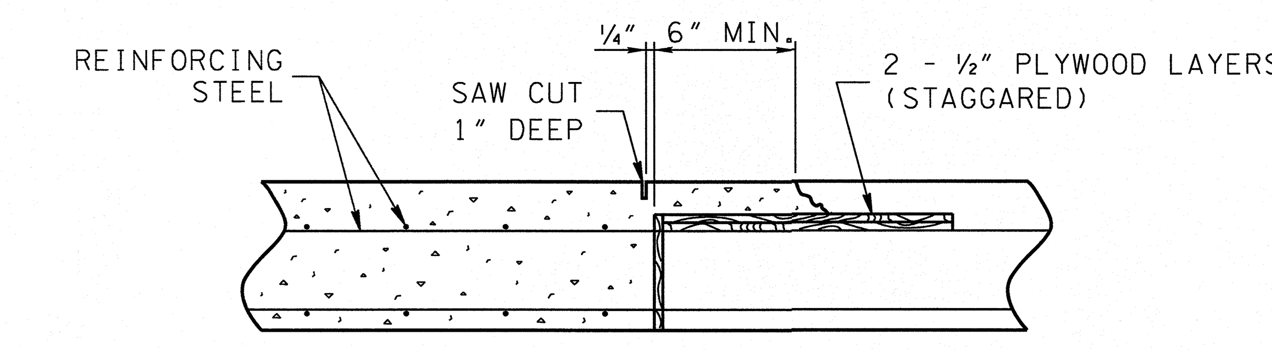

SLAB CONSTRUCTION JOINT DETAIL

NOTE:
THE CONTRACTOR SHALL PLACE CONCRETE FOR THE DECK SLAB IN ONE CONTINUOUS, MONOLITHIC POUR. IN THE EVENT OF AN EQUIPMENT FAILURE OR OTHER EXTREME CASE, THE CONTRACTOR SHALL USE THE SLAB CONSTRUCTION JOINT DETAIL SHOWN ABOVE.

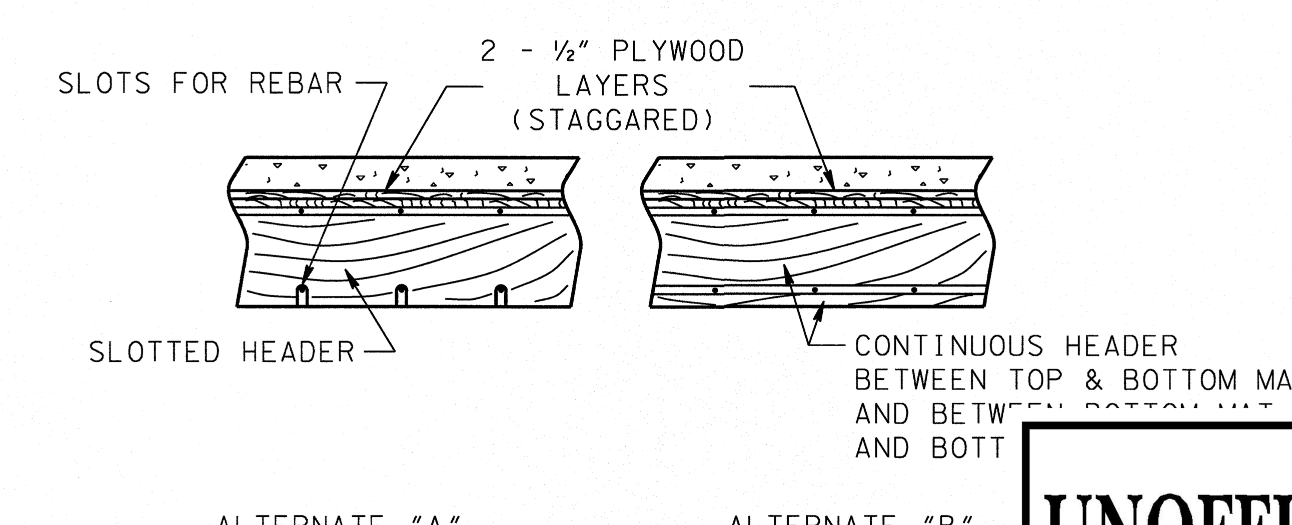

ALTERNATE HEADER DETAILS

UNOFFICIAL SET

NOT FOR BIDDING

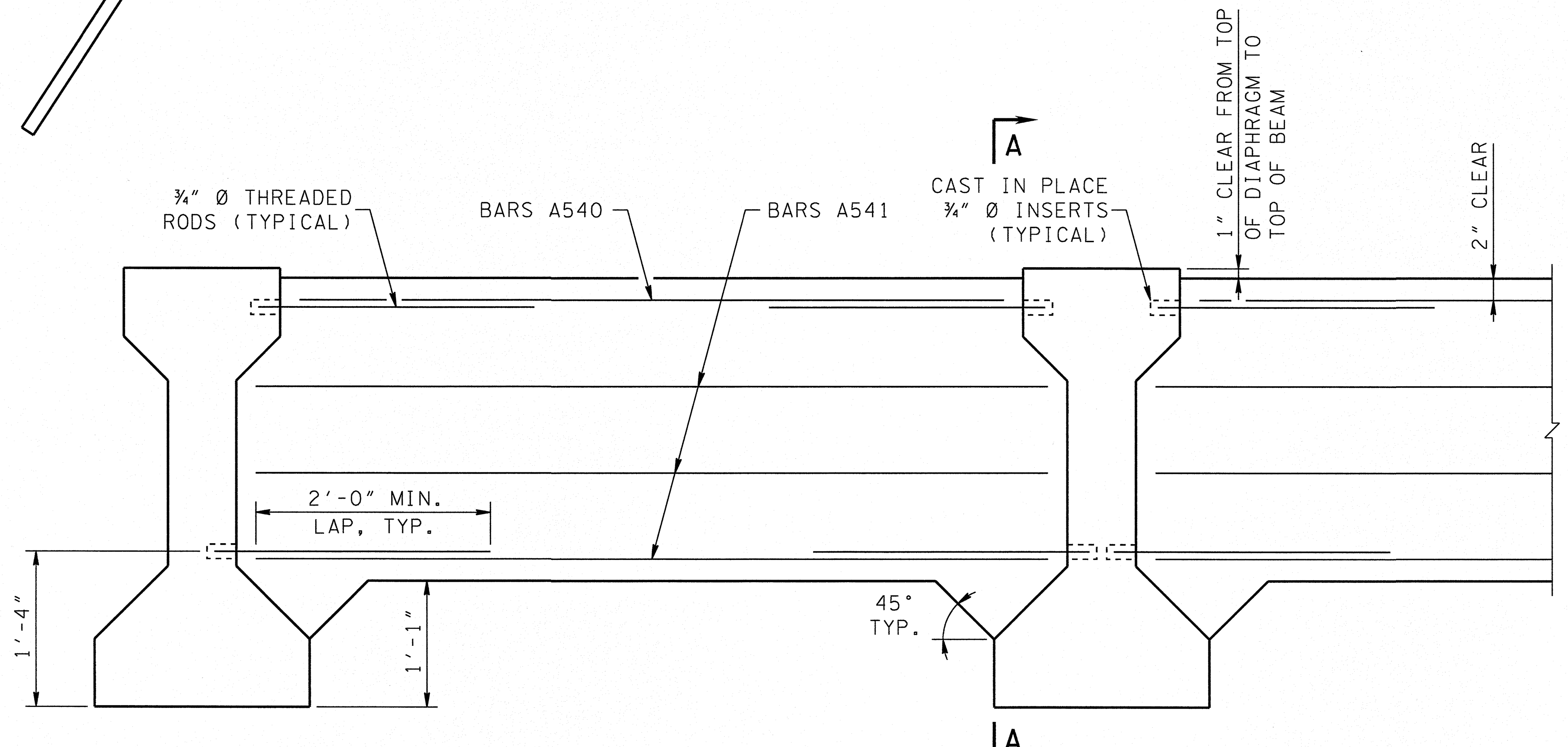

CAST IN PLACE INTERMEDIATE DIAPHRAGM

SCALE: 1" = 1'-0"

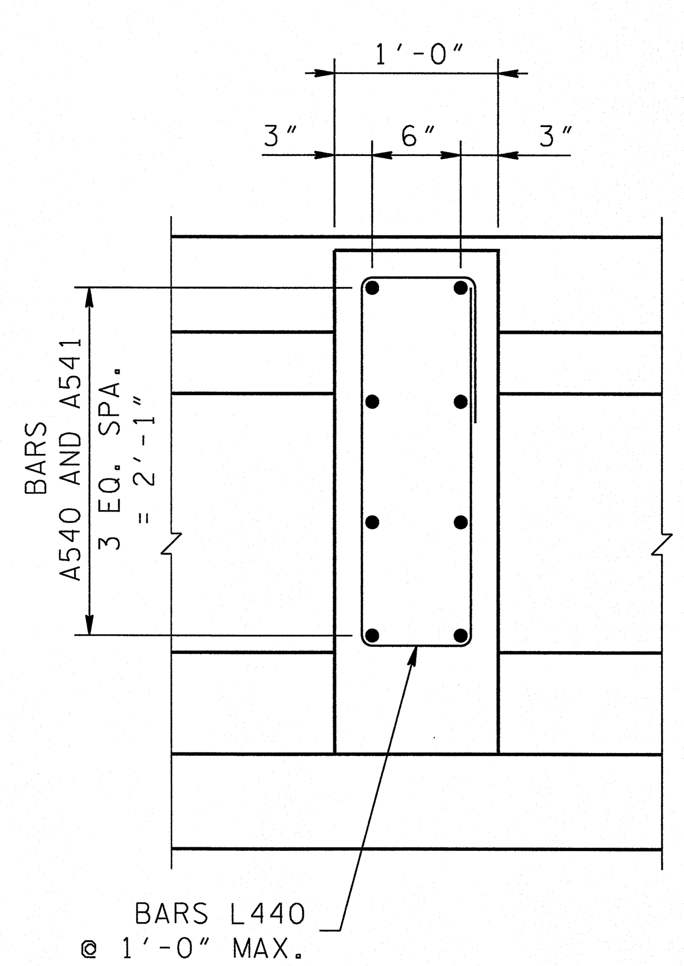

SECTION A-A

SCALE: 1" = 1'-0"

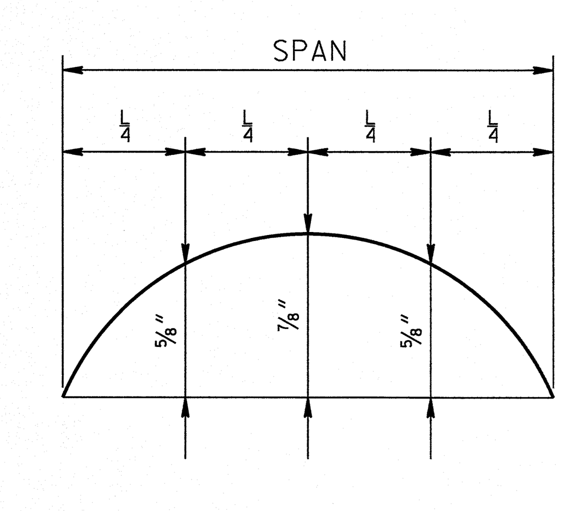

DEAD LOAD CORRECTION CURVE

NOT TO SCALE

THIS CURVE IS FOR DEAD LOAD SLAB AND ALL DEAD LOADS THAT ARE APPLIED AFTER THE SLAB IS IN PLACE.

NOTE: IF PRESTRESSED DECK PANELS ARE USED AND THE BEAMS ARE PROFILED AFTER PANELS ARE IN PLACE, REDUCE THE DEAD LOAD CORRECTION VALUES BY 25%.

CHAD M. THOMAS REGISTERED ENGINEER AGRICULTURE COMMERCE No. 117359 STATE OF TENNESSEE 6/20/14

DESIGNED BY	P. CARDWELL	DATE	05/2014
DRAWN BY	D. ALLEN	DATE	05/2014
SUPERVISED BY	C. THOMAS	DATE	05/2014
CHECKED BY	C. THOMAS	DATE	06/2014

STATE OF TENNESSEE
DEPARTMENT OF TRANSPORTATION

FRAMING PLAN
AND DETAILS
SULLIVAN STREET EXT.
OVER MADD BRANCH
BR. I.D. NO. 82038860005
STATION 55+99.00
CITY OF KINGSPORT
SULLIVAN COUNTY
2014

U-64-188

$$$$SYTIME$$$$$$
$$$$DGNSPEC$$

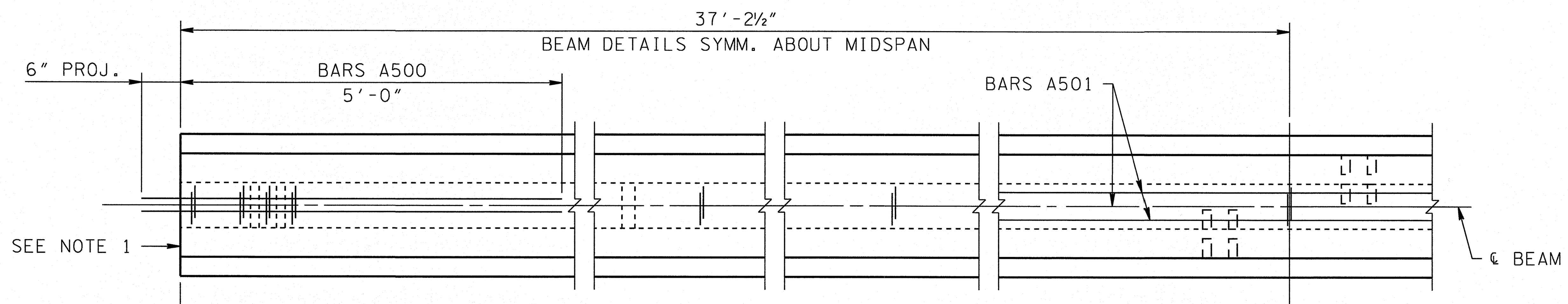

PLAN
NOT TO SCALE

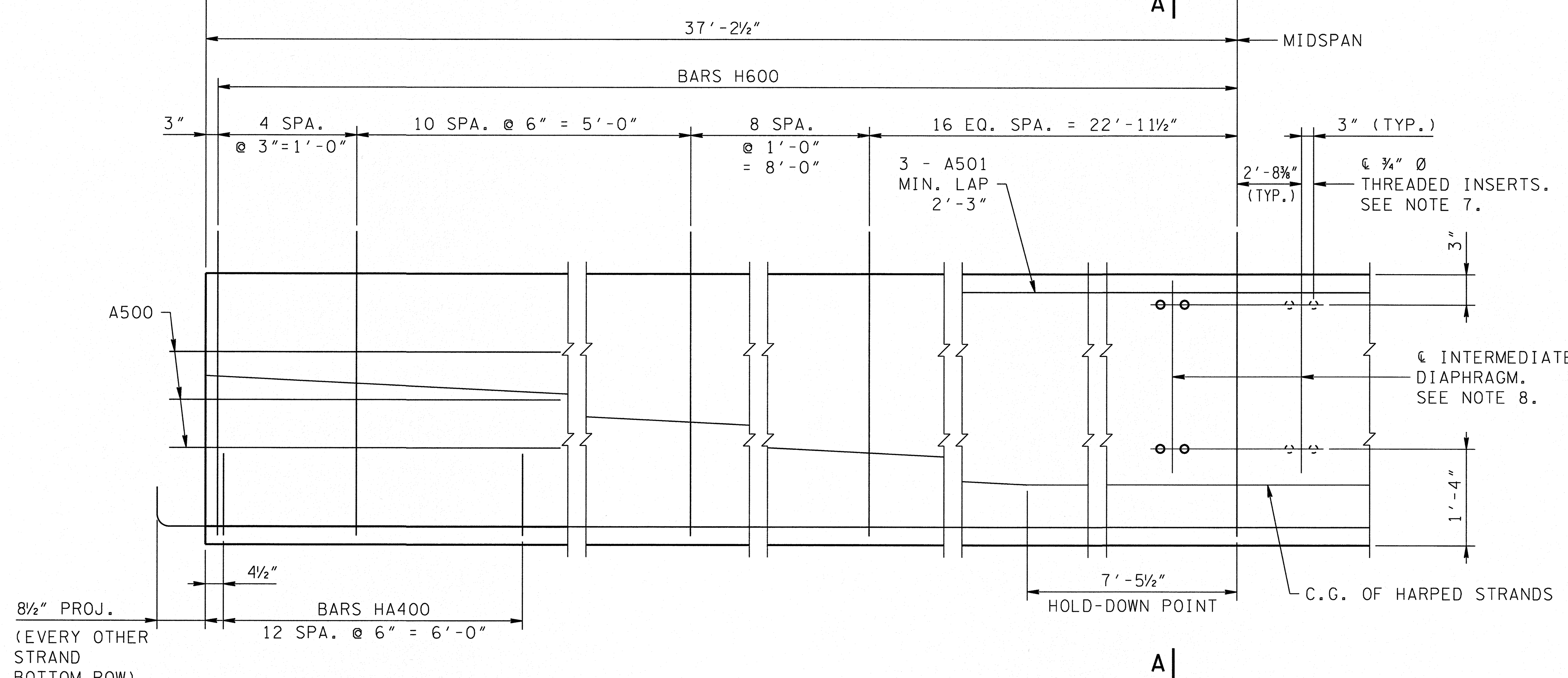

SECTION ON CENTERLINE
NOT TO SCALE

BEAM NOTES

1. SEE STD-14-2 FOR I-BEAM STANDARD DETAILS, NOTES, AND REINFORCING.
2. THE CONCRETE FOR THIS CONSTRUCTION SHALL BE OF SUCH PROPERTIES AS TO ATTAIN A COMPRESSIVE STRENGTH OF NOT LESS THAN 7,000 PSI AT THE AGE OF 28 DAYS AND STRESS TRANSFER SHALL NOT BE MADE TO THE BRIDGE MEMBER UNTIL THE TEST SPECIMENS INDICATE THAT THE CONCRETE HAS REACHED A COMPRESSIVE STRENGTH OF AT LEAST 5,500 PSI. SEE GENERAL NOTES FOR CONCRETE FINISHING NOTE.
3. ALL BEAMS ARE AASHTO - PCI STANDARD TYPE III.
4. ALL PRESTRESSING STRANDS TO BE ½" DIA. ASTM GRADE 270K, 7 WIRE UNCOATED STRESS RELIEVED LOW RELAXATION PRESTRESSING STRANDS.
5. AN INITAL FORCE OF 31,003 LBS SHALL BE APPLIED TO EACH STRAND IN ALL BEAMS. A=0.153 IN. PER STRAND.
6. PRESTRESSED BEAM DESIGN DATA - PER BEAM
   LIVE LOAD DISTRIBUTION FACTOR: SHEAR = 0.88 LANES
   MOMENT = 0.64 LANES
   COMPOSITE DEAD LOAD: DC = 357 LB/FT
   DW = 268 LB/FT
   COMPOSITE SLAB DESIGN STRENGTH: f'c = 4,000 psi.
   NOTE: DOWNWARD DEFLECTION UNDER TOTAL DL IS NOT ALLOWED.
7. THREADED INSERTS SHALL BE PROVIDED IN ALL BEAMS WHERE THE LINE OF INTERIOR DIAPHRAGMS IS DISCONTINUED. THREADED INSERTS SHALL BE FLARED THIN SLAB ¾" - 9 NC THREADED PLAIN FERRULE INSERTS HAVING A MINIMUM ULTIMATE MECHANICAL TENSILE STRENGTH OF 8,000 POUNDS.
8. FOR LOCATION OF INTERMEDIATE DIAPHRAGMS, SEE FRAMING PLAN ON DWG NO. U-64-188. FOR DETAILS OF INTERMEDIATE DIAPHRAGMS, SEE DWG NO. U-64-188.
9. THE PRESTRESSED BEAMS SHALL ATTAIN AN AGE OF AT LEAST 90 DAYS PRIOR TO POURING THE SUPPORT DIAPHRAGMS (EXCLUDING BOTTOM 15 INCHES) AND DECK SLAB.

PROJECT NO.	YEAR	SHEET NO.
82956-3288-04	2014	56

REVISIONS

NO.	DATE	BY	BRIEF DESCRIPTION

ESTIMATED QUANTITIES - PER BEAM

NO. BEAMS REQ'D.	PRESTRESSING STRANDS LB.	CONCRETE C.Y.	REINFORCING STEEL LB.
9	1591	10.7	1620

BILL OF STEEL
(PER BEAM)

BAR	SIZE	NO. REQ'D	LENGTH
A500	5	6	5'-6"
A501	5	6	38'-4"
H600	6	154	5'-6"
HA400	4	26	4'-3"

UNOFFICIAL SET
NOT FOR BIDDING

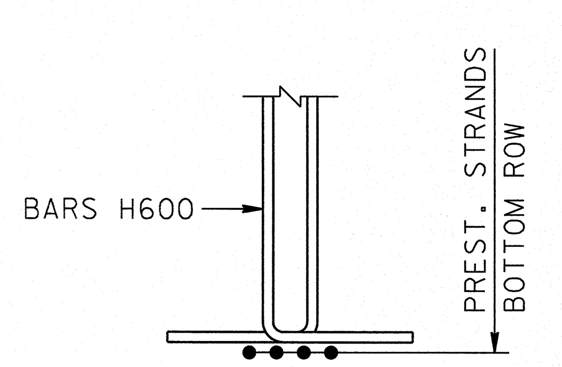

DETAIL "X"
NOT TO SCALE

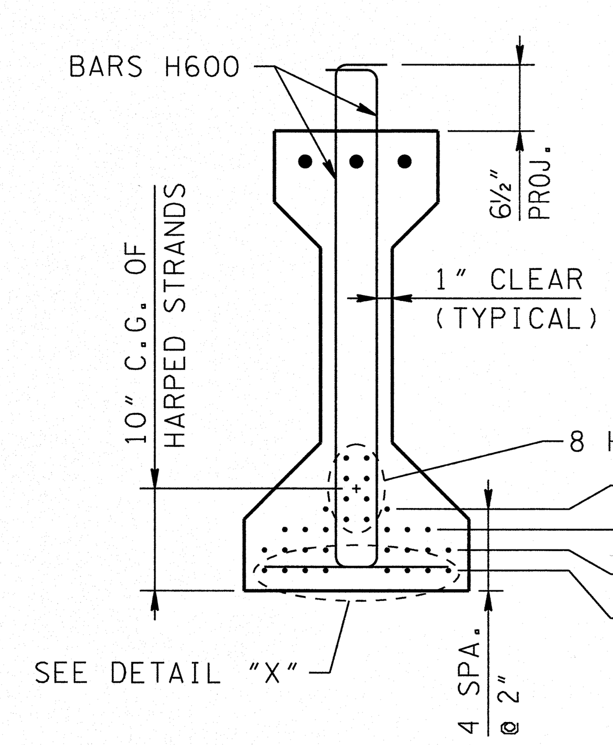

SECTION A-A
SCALE: ¾" = 1'-0"

FOR DIMENSIONS NOT SHOWN
SEE STD. DWG. NO. STD-14-2

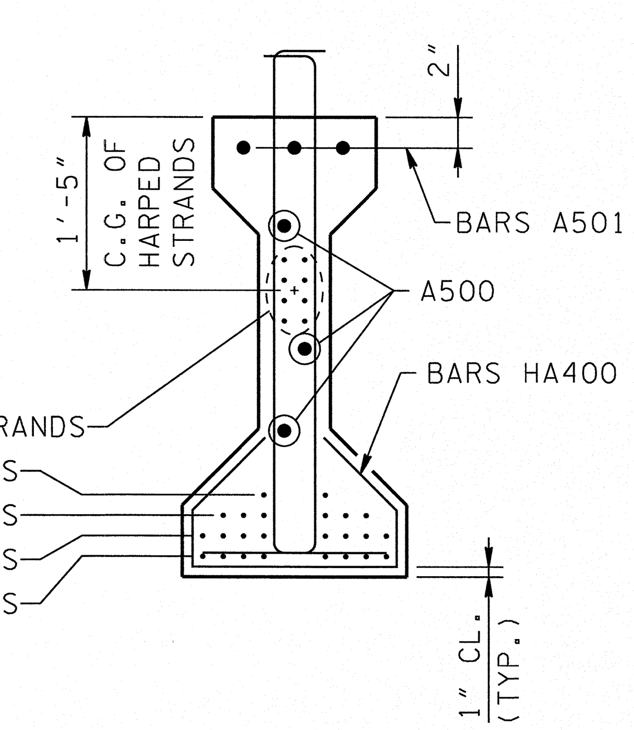

END SECTION
SCALE: ¾" = 1'-0"

FOR DIMENSIONS NOT SHOWN
SEE SECTION A-A
AND STD. DWG. NO. STD-14-2.

BARS A

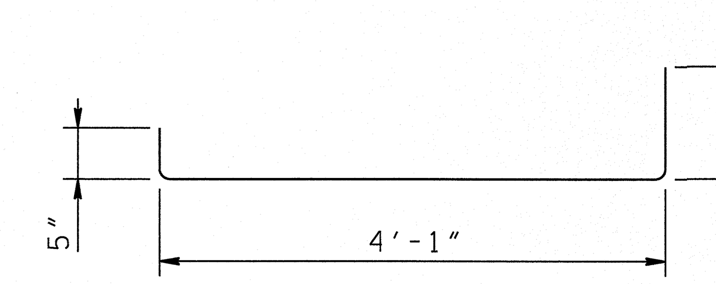

BARS H500

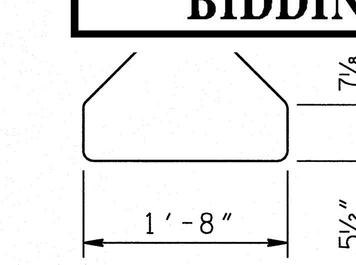

BARS HA400

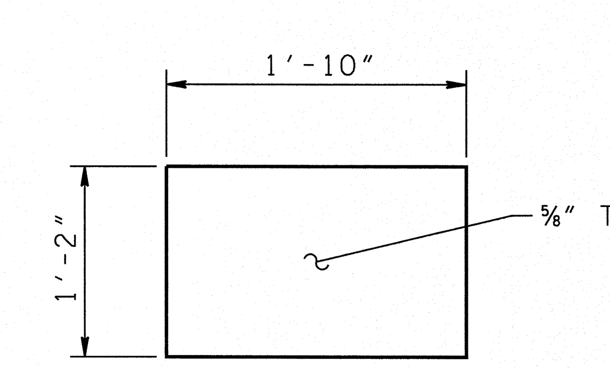

ELASTOMERIC BEARING
PAD DETAILS
NOT TO SCALE

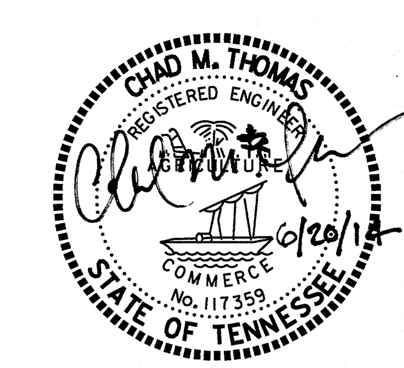

STATE OF TENNESSEE
DEPARTMENT OF TRANSPORTATION

BEAM DETAILS
SULLIVAN STREET EXT.
OVER MADD BRANCH
BR. I.D. NO. 82038860005
STATION 55+99.00
CITY OF KINGSPORT
SULLIVAN COUNTY
2014

DESIGNED BY	P. CARDWELL	DATE	05/2014
DRAWN BY	D. ALLEN	DATE	05/2014
SUPERVISED BY	C. THOMAS	DATE	05/2014
CHECKED BY	C. THOMAS	DATE	06/2014

$$$$SYTIME$$$$$$
$$$$DGNSPEC$$

U-64-189

PROJECT NO.	YEAR	SHEET NO.
82956-3288-04	2014	57

REVISIONS

NO.	DATE	BY	BRIEF DESCRIPTION

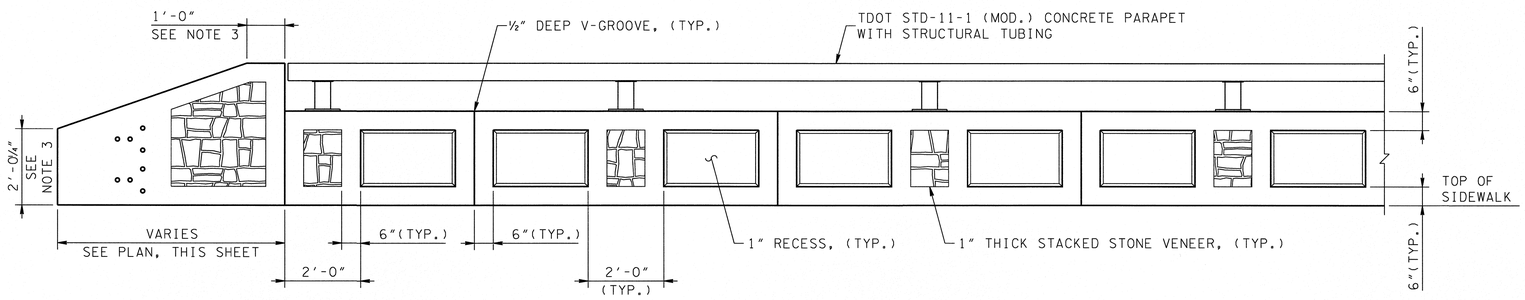

INTERIOR ELEVATION

SCALE: ½" = 1'-0"

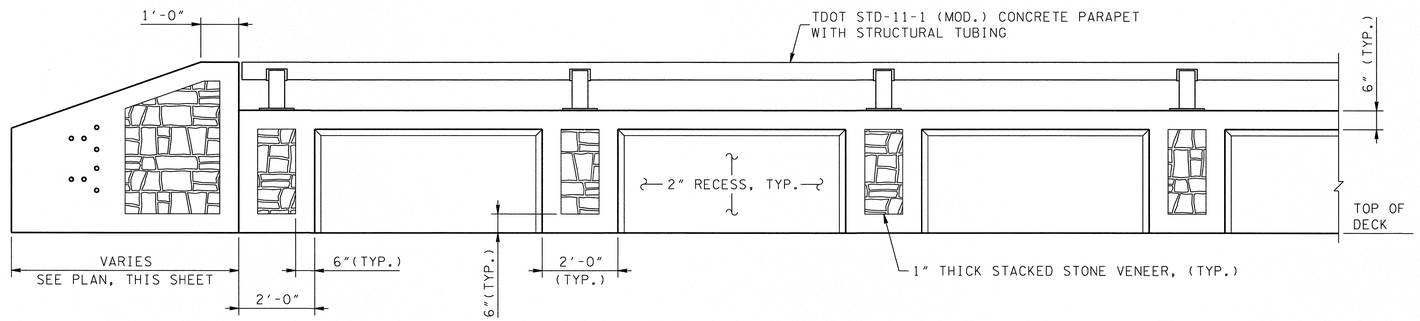

EXTERIOR ELEVATION

SCALE: ½" = 1'-0"

NOTES:

1. SEE TDOT STD-11-1 FOR DIMENSIONS, REINFORCING DETAILS, CONNECTIONS, AND MATERIALS NOT SHOWN.
2. SEE 'APPLIED TEXTURE FINISH SKETCHES' AND 'APPLIED TEXTURE FINISH NOTES' ON DWG NO. U-64-184.
3. MODIFY SLOPE OF STANDARD TERMINAL WALL AT NORTHEAST CORNER TO PROVIDE DIMENSIONS SHOWN ON THIS SHEET. PROVIDE ADDITIONAL REINFORCING STEEL AS REQUIRED.

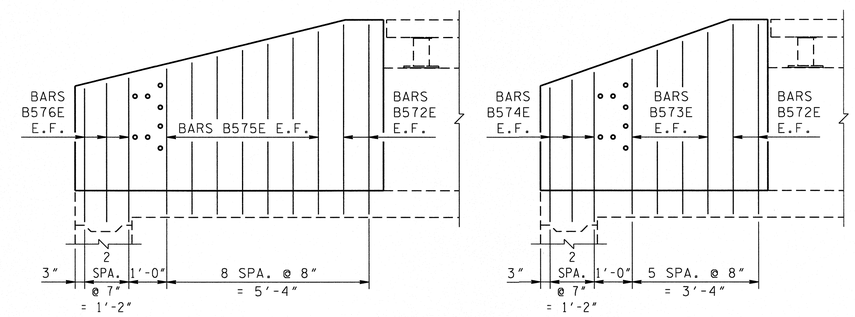

8'-1⅝" TERMINAL WALL

6'-0" TERMINAL WALL

TERMINAL WALL ELEVATION

SCALE: ½" = 1'-0"

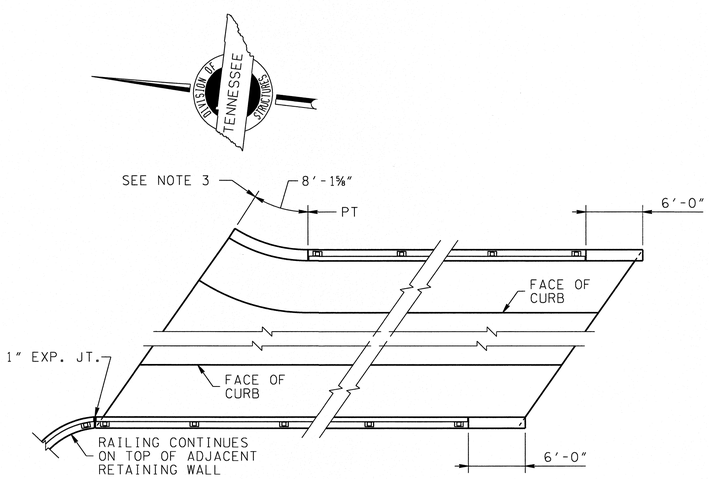

PLAN

NOT TO SCALE

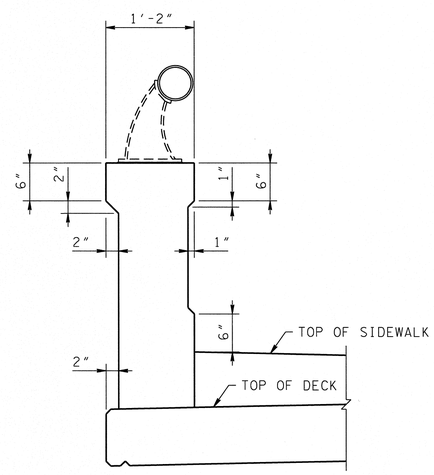

TYPICAL SECTION BETWEEN POSTS

SCALE: 1" = 1'-0"

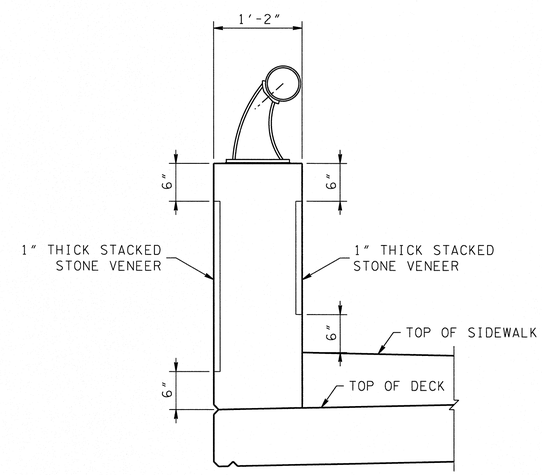

TYPICAL SECTION AT POSTS

SCALE: 1" = 1'-0"

UNOFFICIAL SET

NOT FOR BIDDING

STATE OF TENNESSEE
DEPARTMENT OF TRANSPORTATION

RAILING DETAILS
SULLIVAN STREET EXT.
OVER MADD BRANCH
BR. I.D. NO. 82038860005
STATION 55+99.00
CITY OF KINGSPORT
SULLIVAN COUNTY
2014

DESIGNED BY	P. CARDWELL	DATE	05/2014
DRAWN BY	D. ALLEN	DATE	05/2014
SUPERVISED BY	C. THOMAS	DATE	05/2014
CHECKED BY	C. THOMAS	DATE	06/2014

U-64-190

$$$$SYTIME$$$$$$$
$$$$DGNSPEC$$$$$$$

PROJECT NO.	YEAR	SHEET NO.
82956-3288-04	2014	58

REVISIONS

NO.	DATE	BY	BRIEF DESCRIPTION

NOTES:

1. REINFORCED RISER BLOCKS TO BE POURED MONOLITHICALLY WITH ABUTMENT BEAM. SEE DWG NO. U-64-192 FOR REINFORCED RISER BLOCK DETAIL.
2. SET PRESTRESSED CONCRETE I-BEAMS PRIOR TO FORMING AND PLACING CONCRETE FOR ENDWALL.
3. NOT LESS THAN HALF OF THE SLAB SHALL BE POURED PRIOR TO, OR CONCURRENTLY WITH, PLACEMENT OF ANY PART OF THE ABUTMENT BACKWALLS. AT LEAST THE TOP 11 INCHES OF THE BACKWALL SHALL BE POURED CONCURRENTLY WITH THE END OF SLAB. ONE ABUTMENT BACKWALL MUST BE POURED FULL HEIGHT CONCURRENTLY WITH THE END OF SLAB.
4. ELASTOMERIC PADS SHALL BE IN PLACE A MINIMUM OF ONE DAY BEFORE BEING DISTURBED BY SETTING BEAMS. PLACE RUBBER BONDING CEMENT IN SUCH A WAY THAT VISIBLE CONCRETE SURFACES WILL NOT BE STAINED.
5. SEE 'PILE EMBEDMENT DETAIL' ON DWG NO. U-64-192 AND STANDARD DRAWING STD-6-1 FOR ADDITIONAL PILE DETAILS AND NOTES NOT SHOWN ON THE PLANS.
6. ALL EXPOSED FACES OF WINGWALLS AND 1'-0" MINIMUM BELOW FINISHED GRADE SHALL RECEIVE APPLIED TEXTURE FINISH, COLOR TO BE CHOSEN BY OWNER. SEE 'APPLIED TEXTURE FINISH NOTES' ON DWG NO. U-64-184.

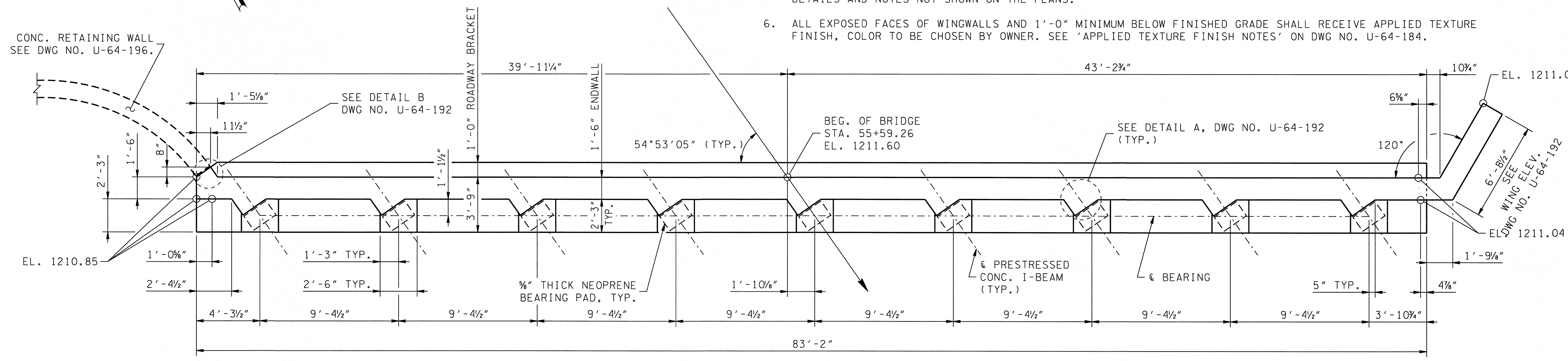

PLAN

SCALE: ¼" = 1'-0"

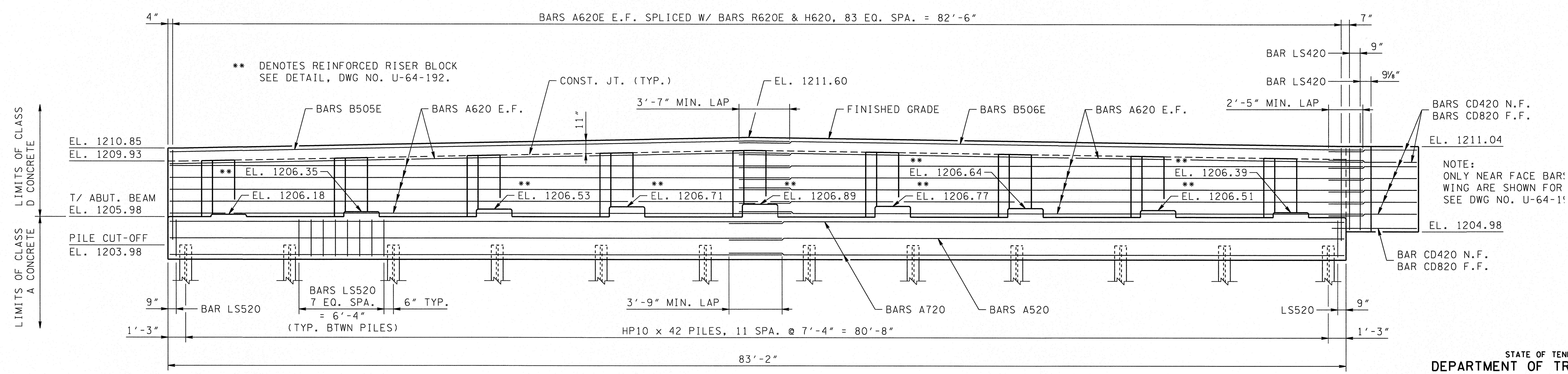

ELEVATION

SCALE: ¼" = 1'-0"

ESTIMATED QUANTITIES			
CLASS D CONCRETE (ABUTMENTS)	CLASS A CONCRETE	EPOXY COATED REINFORCING STEEL	STEEL BAR REINFORCEMENT (BRIDGES)
C.Y.	C.Y.	LB.	LB.
31	36	1641	7080

UNOFFICIAL SET

NOT FOR BIDDING

STATE OF TENNESSEE
DEPARTMENT OF TRANSPORTATION

ABUTMENT NO. 1
SULLIVAN STREET EXT.
OVER MADD BRANCH
BR. I.D. NO. 82038860005
STATION 55+99.00
CITY OF KINGSPORT
SULLIVAN COUNTY
2014

CHAD M. THOMAS REGISTERED ENGINEER No. 117359 STATE OF TENNESSEE 6/20/14

DESIGNED BY	P. CARDWELL	DATE	05/2014
DRAWN BY	D. ALLEN	DATE	05/2014
SUPERVISED BY	C. THOMAS	DATE	05/2014
CHECKED BY	C. THOMAS	DATE	06/2014

$$$$SYTIME$$$$$$
$$$$DGNSPEC$$$

PROJECT NO.	YEAR	SHEET NO.
82956-3288-04	2014	59

REVISIONS

NO.	DATE	BY	BRIEF DESCRIPTION

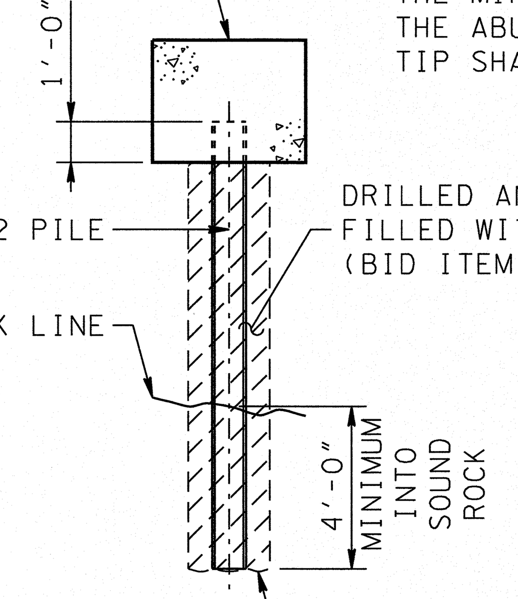

NOTE:
THE MINIMUM PILE LENGTH FROM THE BOTTOM OF THE ABUTMENT BEAM TO THE END OF THE CORED TIP SHALL BE 10'-0".

PILE EMBEDMENT DETAIL

SCALE: ¼" = 1'-0"

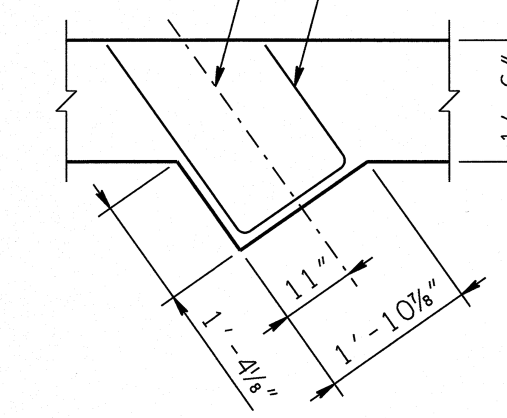

DETAIL A

SCALE: ½" = 1'-0"

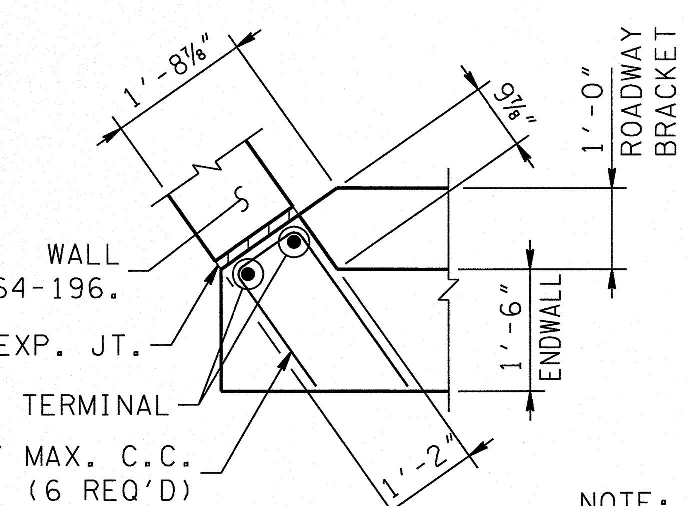

DETAIL B

SCALE: ½" = 1'-0"

NOTE:
SEE 'TYPICAL EXPANSION JOINT' DETAIL ON DWG NO. U-64-196.

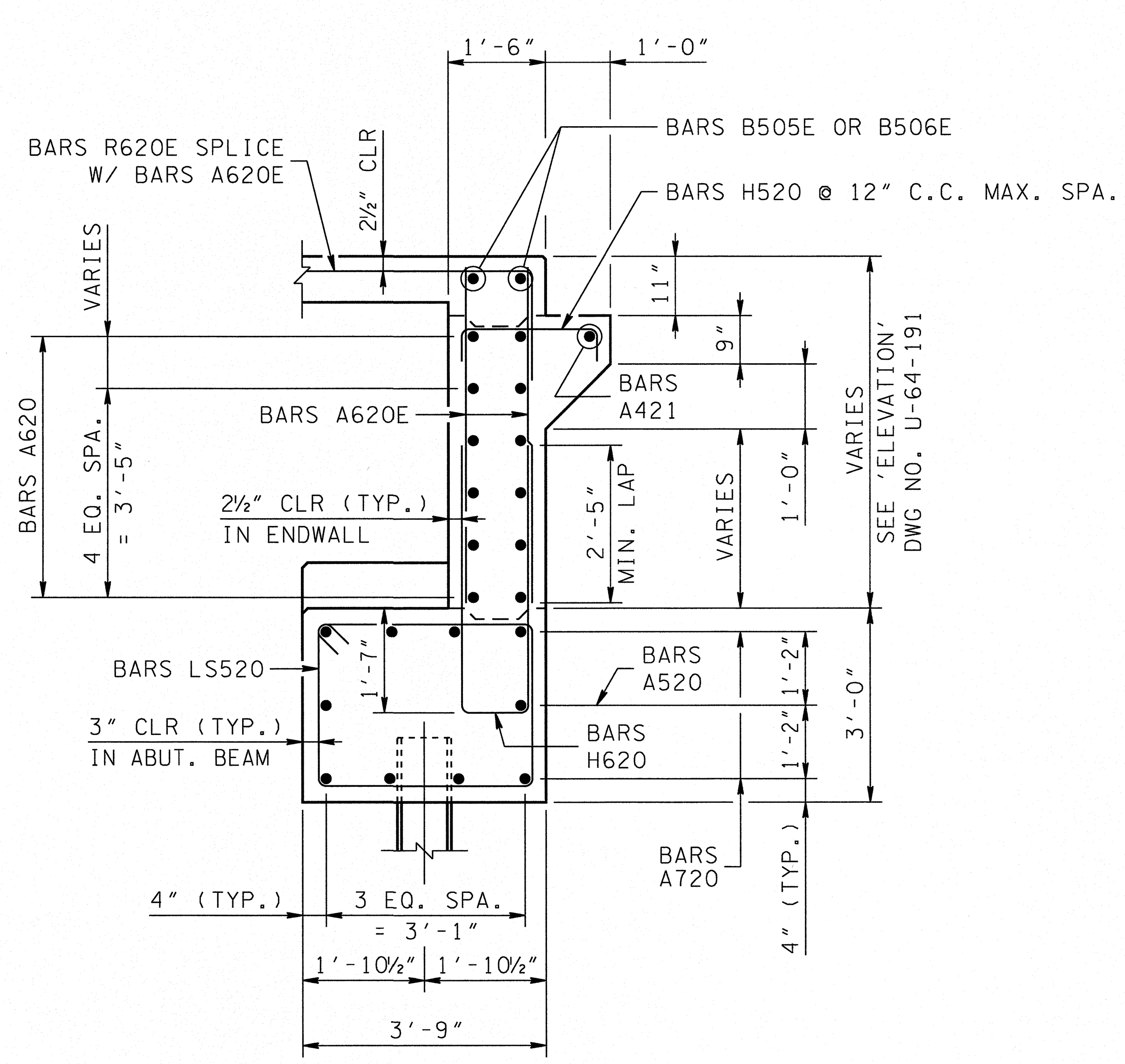

TYPICAL ABUTMENT SECTION

SCALE: ½" = 1'-0"

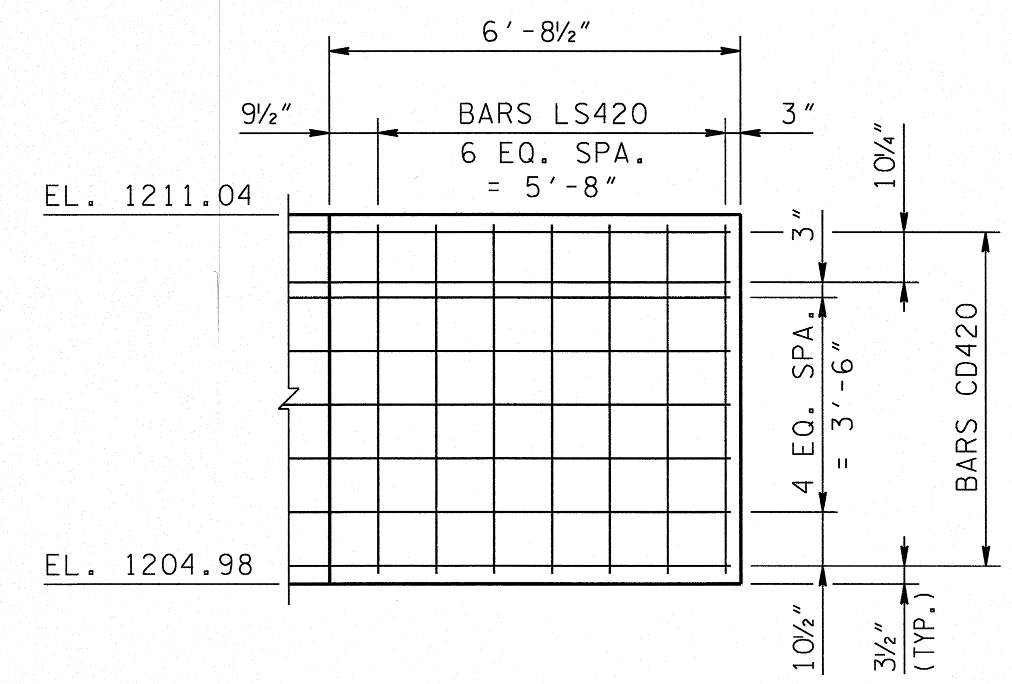

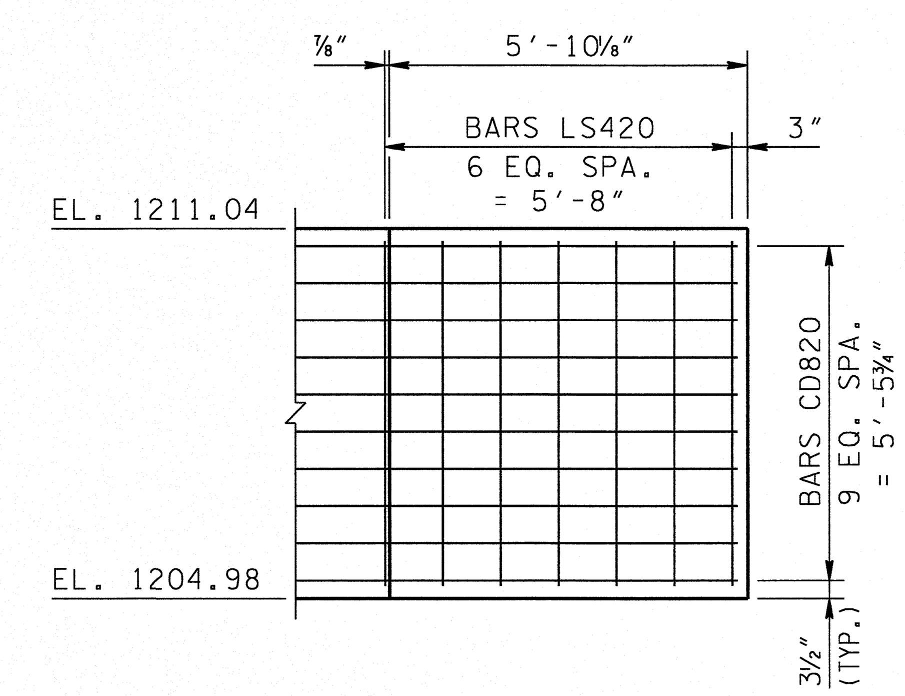

WING ELEVATION

SCALE: ⅜" = 1'-0"

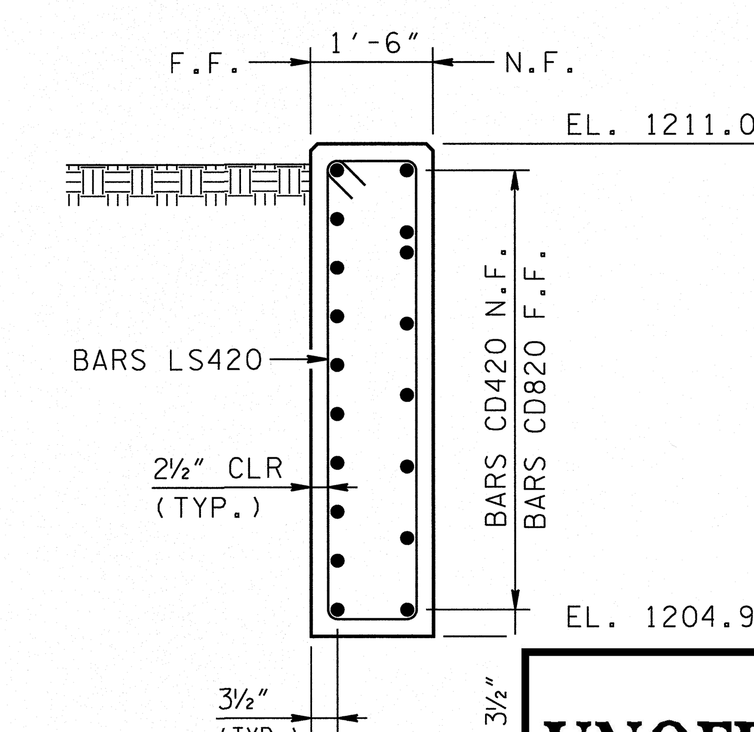

WING SECTIO

SCALE: ½" = 1'-

UNOFFICIAL SET

NOT FOR BIDDING

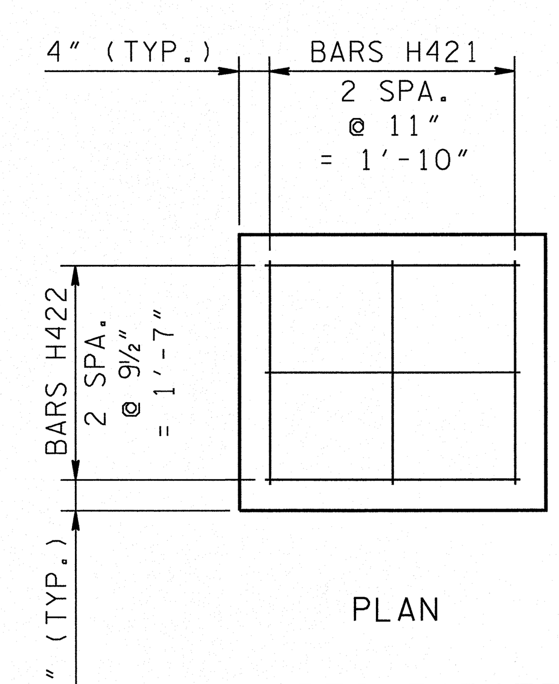

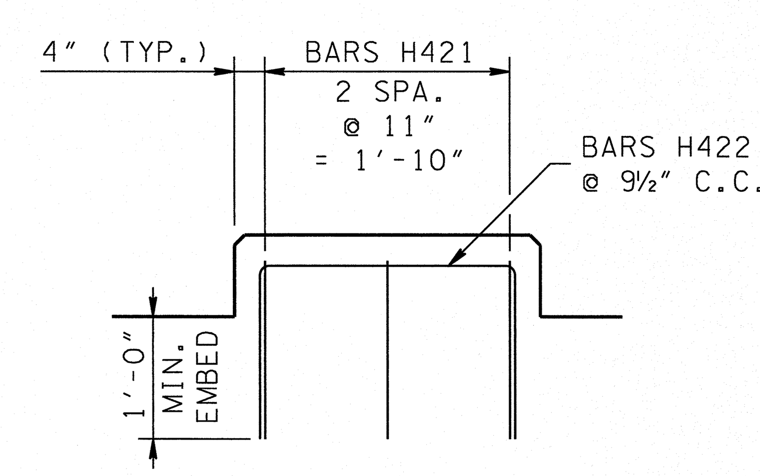

REINFORCED RISER BLOCK DETAIL

SCALE: ¾" = 1'-0"

DESIGNED BY	P. CARDWELL	DATE	05/2014
DRAWN BY	D. ALLEN	DATE	05/2014
SUPERVISED BY	C. THOMAS	DATE	05/2014
CHECKED BY	C. THOMAS	DATE	06/2014

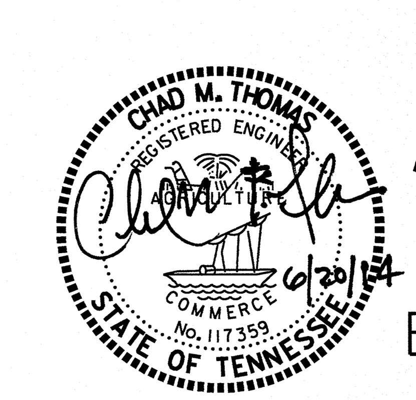

STATE OF TENNESSEE
DEPARTMENT OF TRANSPORTATION

ABUTMENT NO. 1 DETAILS
SULLIVAN STREET EXT.
OVER MADD BRANCH
BR. I.D. NO. 82038860005
STATION 55+99.00
CITY OF KINGSPORT
SULLIVAN COUNTY
2014

U-64-192

$$$$SYTIME$$$$$$
$$$$DGNSPEC$$

PROJECT NO.	YEAR	SHEET NO.
82956-3288-04	2014	60

REVISIONS

NO.	DATE	BY	BRIEF DESCRIPTION

NOTES:

1. REINFORCED RISER BLOCKS TO BE POURED MONOLITHICALLY WITH ABUTMENT BEAM. SEE DWG NO. U-64-194 FOR REINFORCED RISER BLOCK DETAIL.
2. SET PRESTRESSED CONCRETE I-BEAMS PRIOR TO FORMING AND PLACING CONCRETE FOR ENDWALL.
3. NOT LESS THAN HALF OF THE SLAB SHALL BE POURED PRIOR TO, OR CONCURRENTLY WITH, PLACEMENT OF ANY PART OF THE ABUTMENT BACKWALLS. AT LEAST THE TOP 11 INCHES OF THE BACKWALL SHALL BE POURED CONCURRENTLY WITH THE END OF SLAB. ONE ABUTMENT BACKWALL MUST BE POURED FULL HEIGHT CONCURRENTLY WITH THE END OF SLAB.
4. ELASTOMERIC PADS SHALL BE IN PLACE A MINIMUM OF ONE DAY BEFORE BEING DISTURBED BY SETTING BEAMS. PLACE RUBBER BONDING CEMENT IN SUCH A WAY THAT VISIBLE CONCRETE SURFACES WILL NOT BE STAINED.
5. SEE 'PILE EMBEDMENT DETAIL' ON DWG NO. U-64-194 AND STANDARD DRAWING STD-6-1 FOR ADDITIONAL PILE DETAILS AND NOTES NOT SHOWN ON THE PLANS.
6. SEE DWG NO. U-64-194 FOR ABUTMENT/WING BEAM PLAN.
7. ALL EXPOSED FACES OF WINGWALLS AND 1'-0" MINIMUM BELOW FINISHED GRADE SHALL RECEIVE APPLIED TEXTURE FINISH, COLOR TO BE CHOSEN BY OWNER. SEE 'APPLIED TEXTURE FINISH NOTES' ON DWG NO. U-64-184.

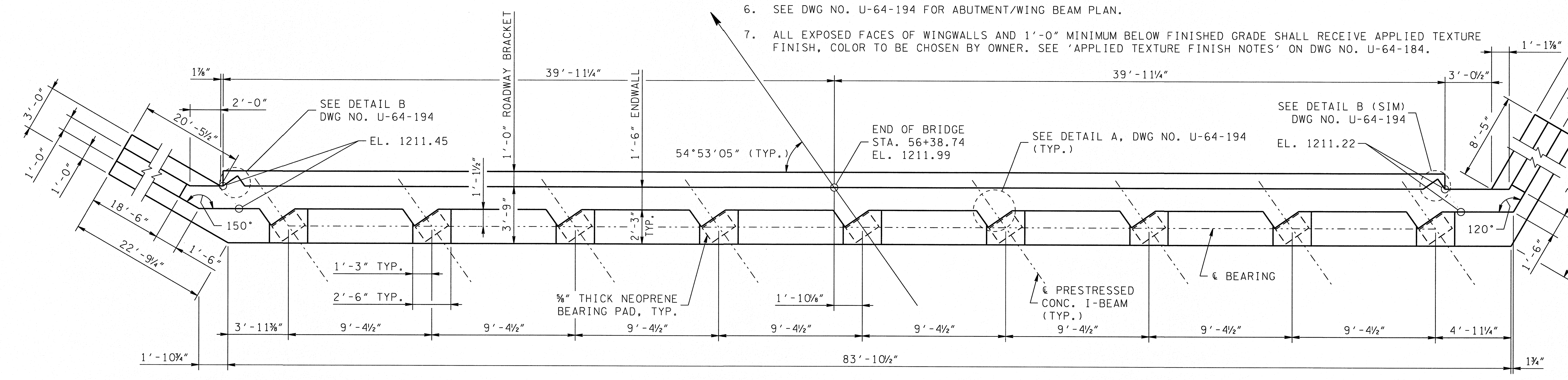

PLAN

SCALE: ¼" = 1'-0"

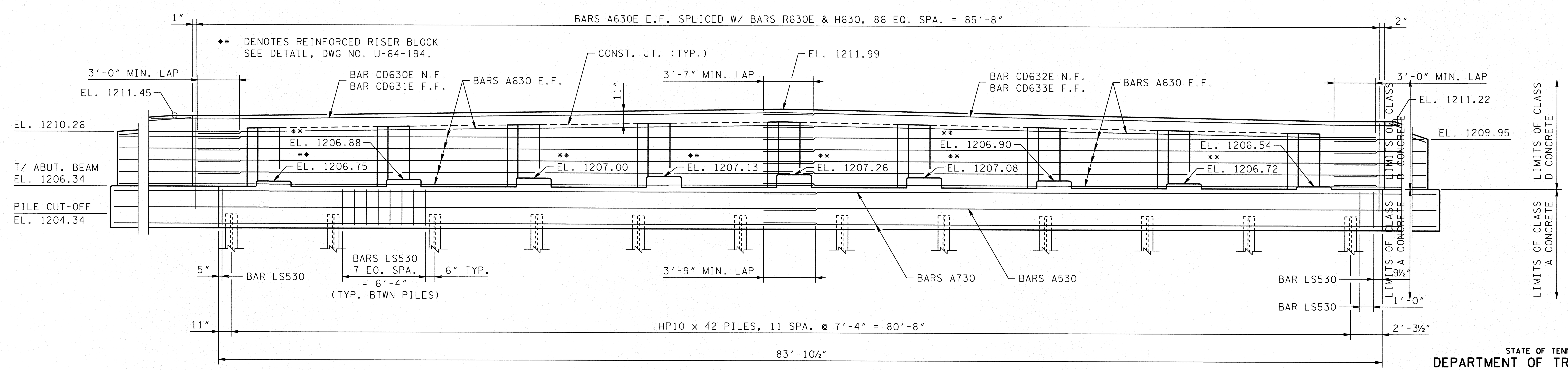

ELEVATION

SCALE: ¼" = 1'-0"

UNOFFICIAL SET

NOT FOR BIDDING

ESTIMATED QUANTITIES			
CLASS D CONCRETE (ABUTMENTS)	CLASS A CONCRETE	EPOXY COATED REINFORCING STEEL	STEEL BAR REINFORCEMENT (BRIDGES)
C.Y.	C.Y.	LB.	LB.
33	46	1699	8701

DESIGNED BY	P. CARDWELL	DATE	05/2014
DRAWN BY	D. ALLEN	DATE	05/2014
SUPERVISED BY	C. THOMAS	DATE	05/2014
CHECKED BY	C. THOMAS	DATE	06/2014

CHAD M. THOMAS REGISTERED ENGINEER AGRICULTURE COMMERCE No. 117359 STATE OF TENNESSEE 6/20/14

STATE OF TENNESSEE
DEPARTMENT OF TRANSPORTATION

ABUTMENT NO. 2
SULLIVAN STREET EXT.
OVER MADD BRANCH
BR. I.D. NO. 82038860005
STATION 55+99.00
CITY OF KINGSPORT
SULLIVAN COUNTY
2014

U-64-193

$$$SYTIME$$$$$$ $$$DGNSPEC$$$

PROJECT NO.	YEAR	SHEET NO.
82956-3288-04	2014	61

REVISIONS

NO.	DATE	BY	BRIEF DESCRIPTION

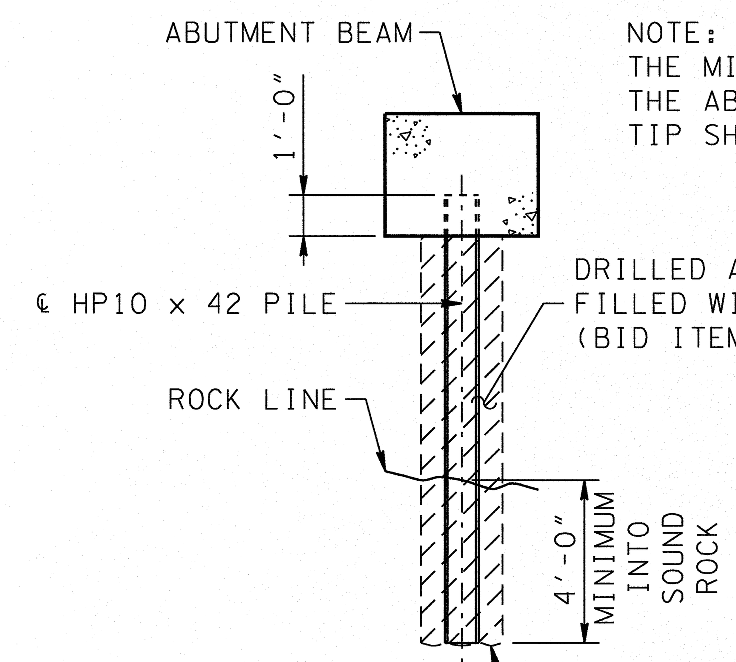

NOTE:
THE MINIMUM PILE LENGTH FROM THE BOTTOM OF THE ABUTMENT BEAM TO THE END OF THE CORED TIP SHALL BE 10'-0".

2'-0" Ø CORED HOLE FOR PILE. PLACE PILE AND FILL HOLE WITH CONCRETE, F'C = 3 KSI MINIMUM. CORING AND CONCRETE FILL WILL BE PAID UNDER BID ITEM NO. 204-14.

PILE EMBEDMENT DETAIL
SCALE: ¼" = 1'-0"

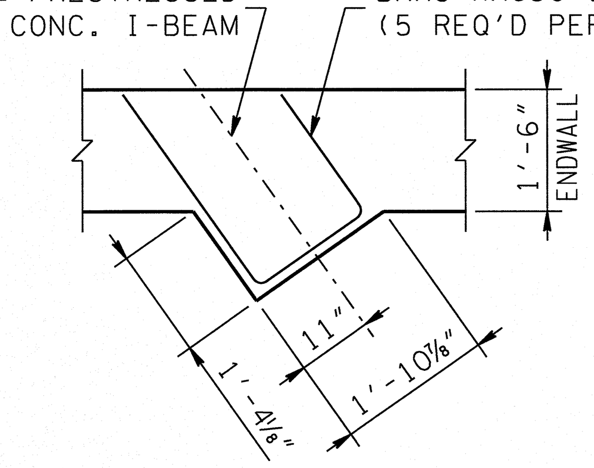

DETAIL A
SCALE: ½" = 1'-0"

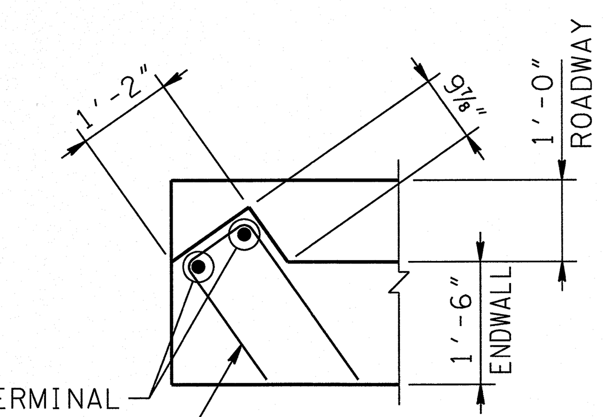

DETAIL B
SCALE: ½" = 1'-0"

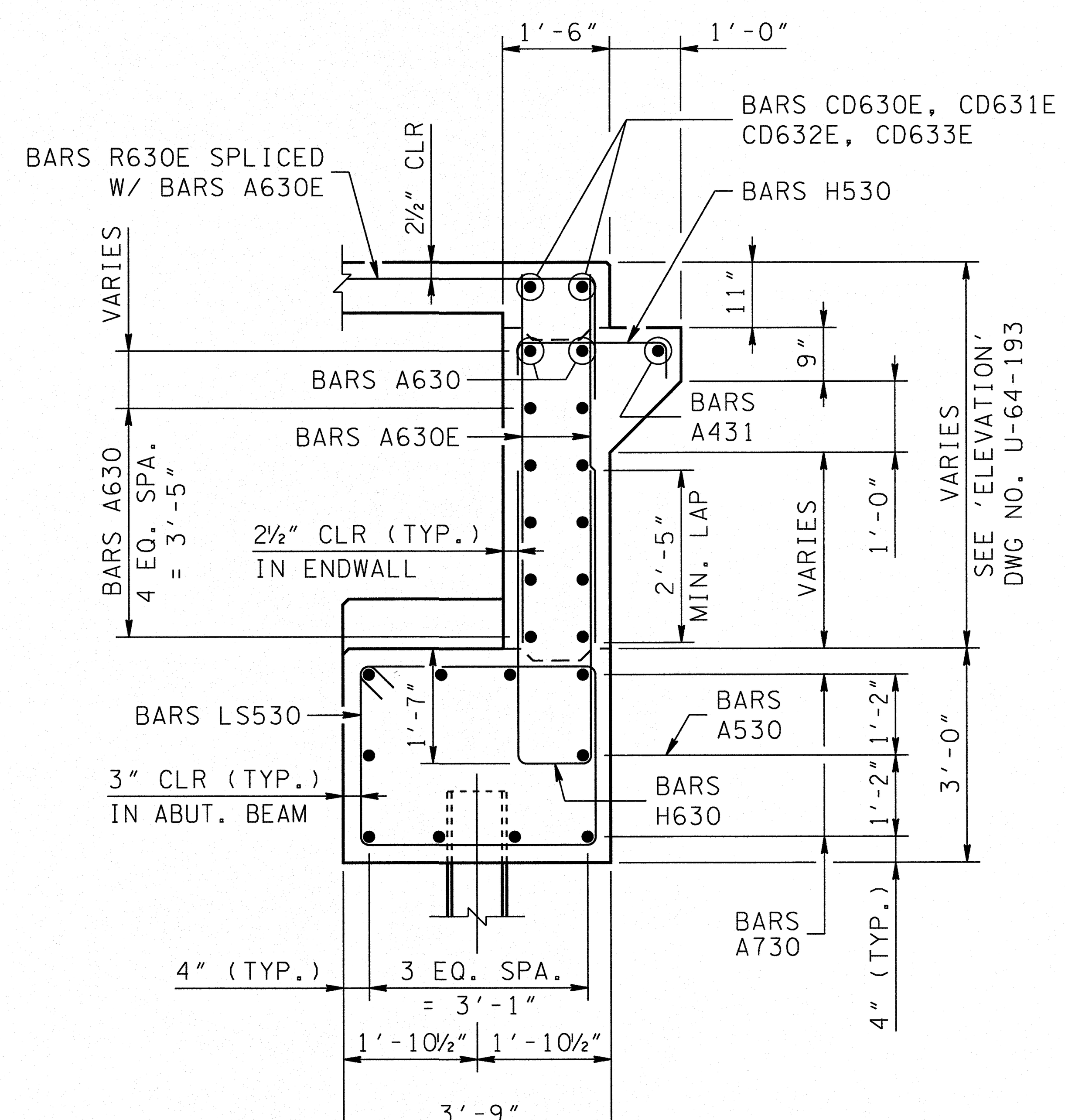

TYPICAL ABUTMENT SECTION
SCALE: ½" = 1'-0"

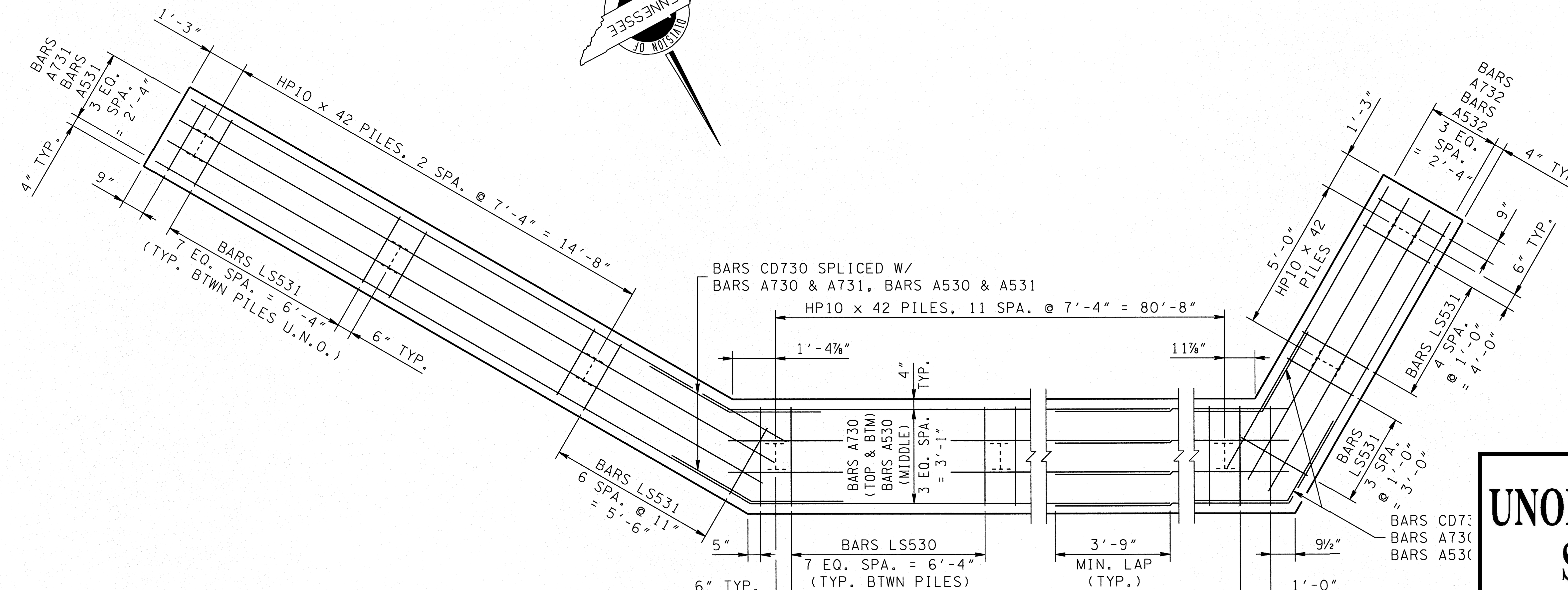

ABUTMENT/WING BEAM PLAN
SCALE: ⅜" = 1'-0"

UNOFFICIAL SET
NOT FOR BIDDING

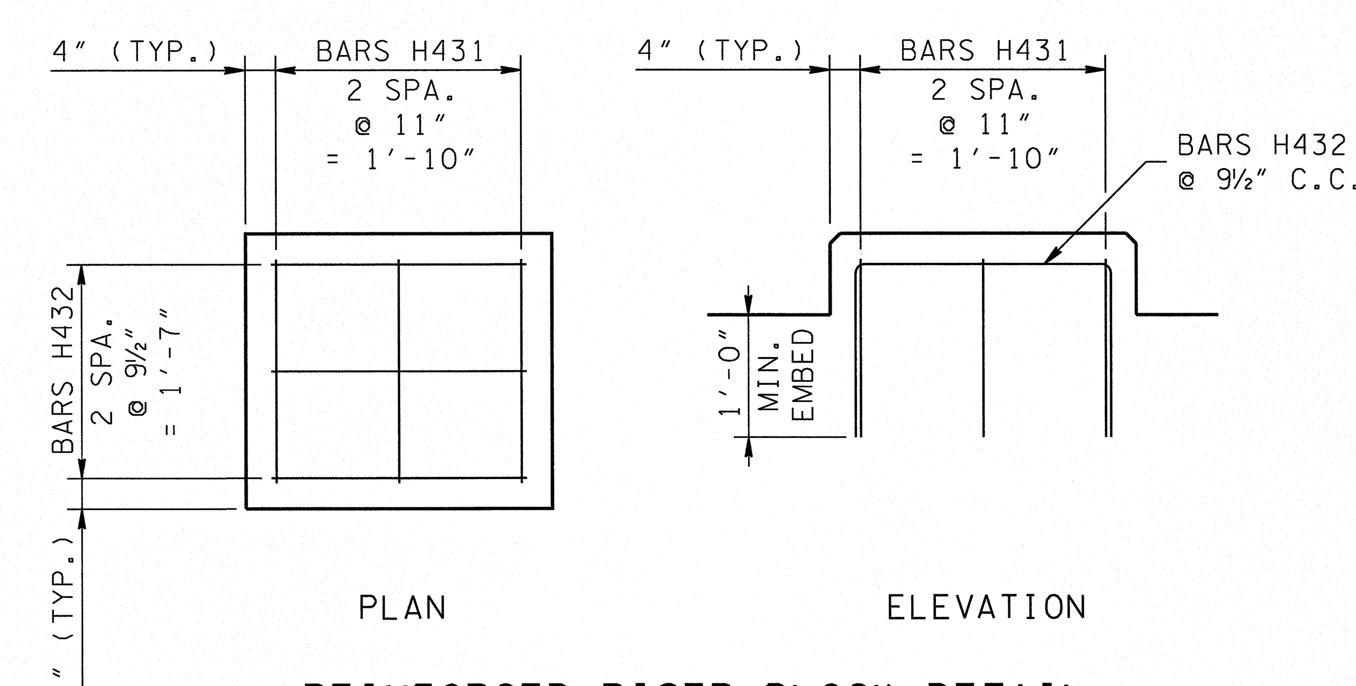

REINFORCED RISER BLOCK DETAIL
SCALE: ¾" = 1'-0"

STATE OF TENNESSEE
DEPARTMENT OF TRANSPORTATION

ABUTMENT NO. 2 DETAILS
SULLIVAN STREET EXT.
OVER MADD BRANCH
BR. I.D. NO. 82038860005
STATION 55+99.00
CITY OF KINGSPORT
SULLIVAN COUNTY
2014

DESIGNED BY P. CARDWELL DATE 05/2014
DRAWN BY D. ALLEN DATE 05/2014
SUPERVISED BY C. THOMAS DATE 05/2014
CHECKED BY C. THOMAS DATE 06/2014

$$$$SYTIME$$$$$$
$$$$DGNSPEC$$

U-64-194

PROJECT NO.	YEAR	SHEET NO.
82956-3288-04	2014	62

REVISIONS

NO.	DATE	BY	BRIEF DESCRIPTION

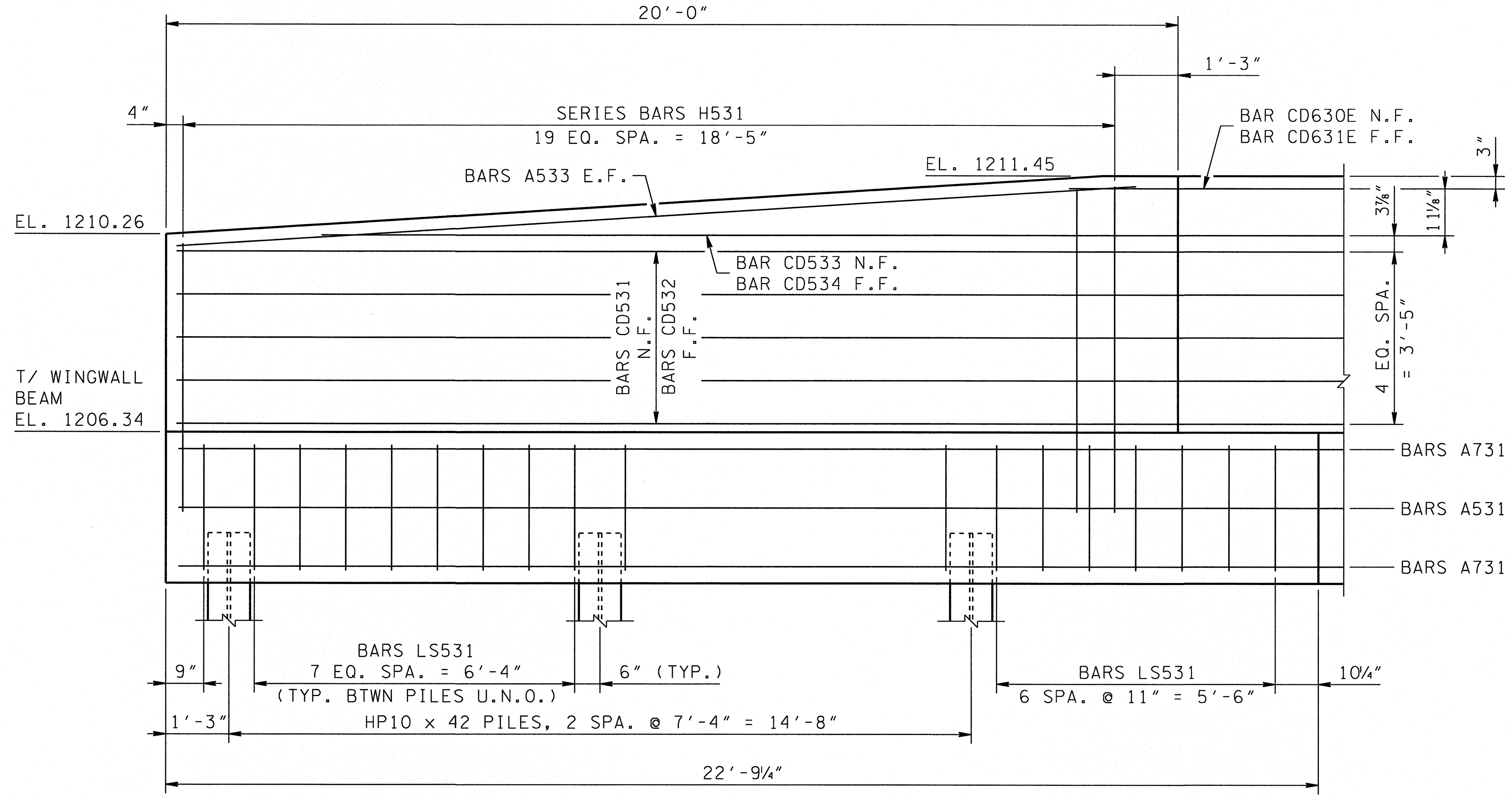

EAST WINGWALL ELEVATION

SCALE: ½" = 1'-0"

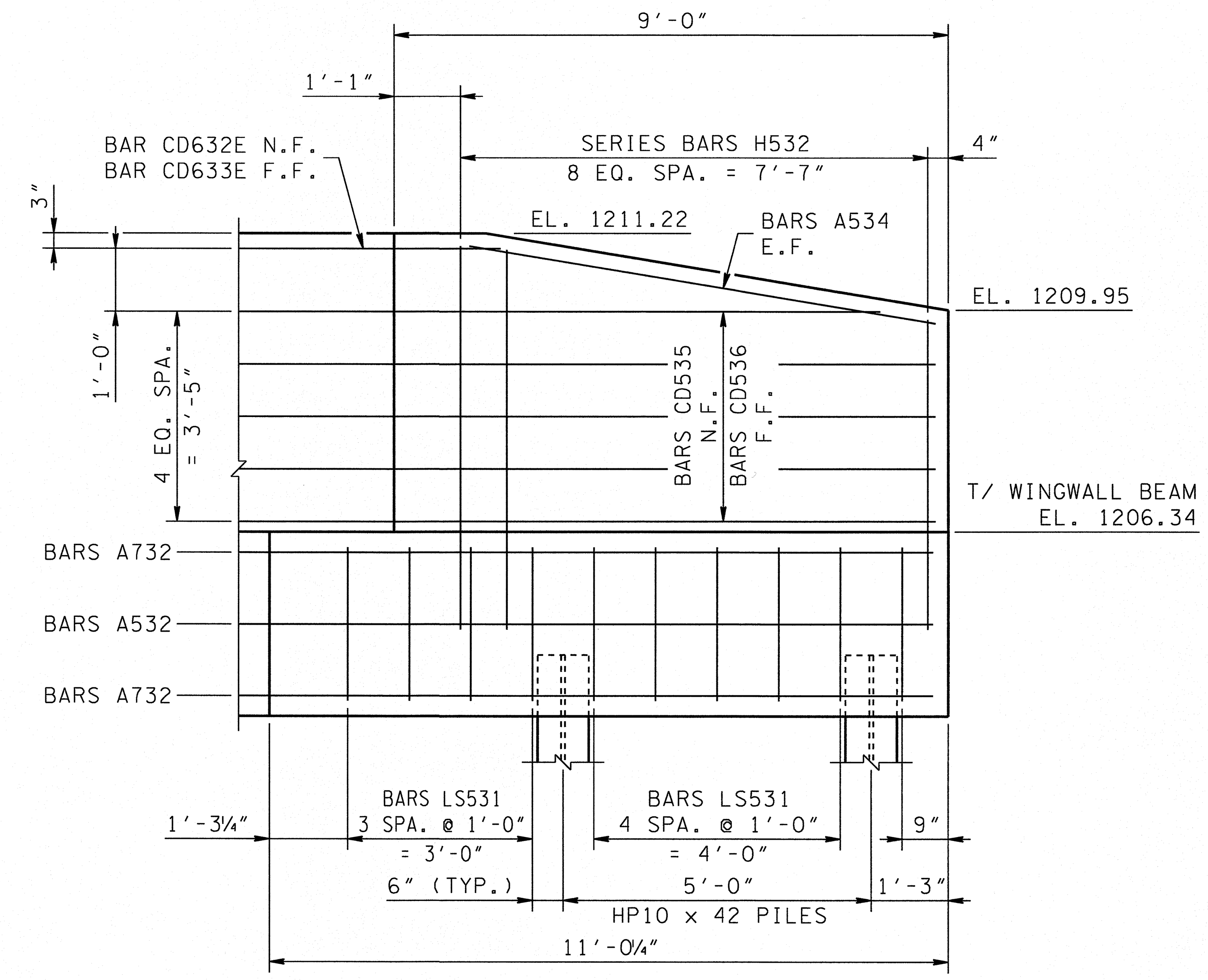

WEST WINGWALL ELEVATION

SCALE: ½" = 1'-0"

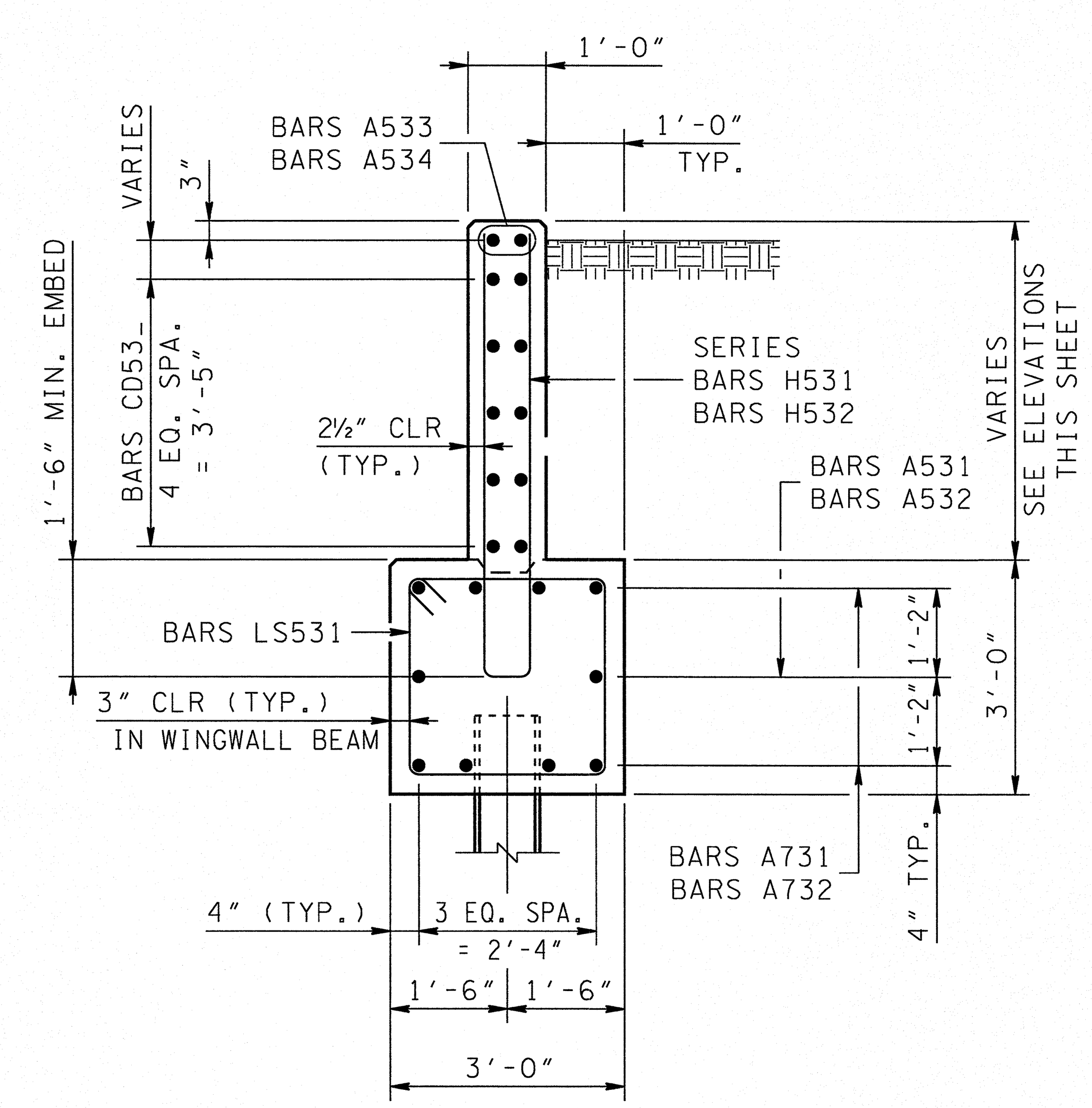

TYPICAL WINGWALL SECTION

SCALE: ½" = 1'-0"

UNOFFICIAL SET

NOT FOR BIDDING

DESIGNED BY	P. CARDWELL	DATE	05/2014
DRAWN BY	D. ALLEN	DATE	05/2014
SUPERVISED BY	C. THOMAS	DATE	05/2014
CHECKED BY	C. THOMAS	DATE	06/2014

$$$$SYTIME$$$$$$
$$$$DGNSPEC$$$

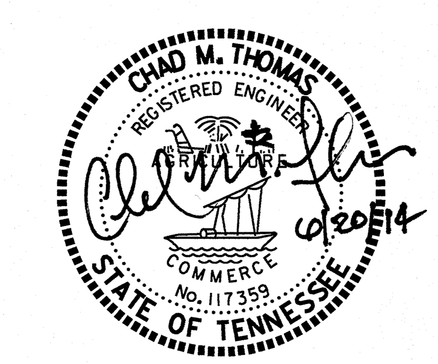

STATE OF TENNESSEE
DEPARTMENT OF TRANSPORTATION

ABUTMENT NO. 2 WINGWALLS
SULLIVAN STREET EXT.
OVER MADD BRANCH
BR. I.D. NO. 82038860005
STATION 55+99.00
CITY OF KINGSPORT
SULLIVAN COUNTY
2014

U-64-195

PROJECT NO.	YEAR	SHEET NO.
82956-3288-04	2014	63

REVISIONS

NO.	DATE	BY	BRIEF DESCRIPTION

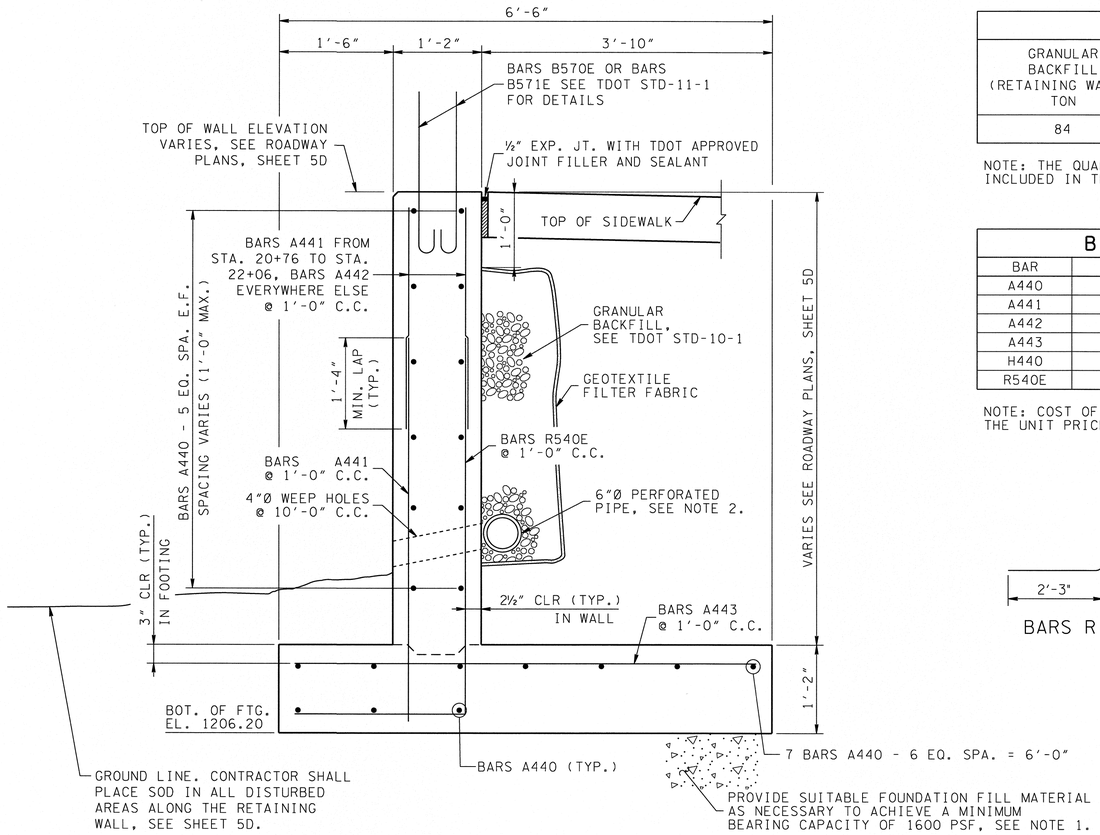

TYPICAL RETAINING WALL SECTION

NOTES:

1. DESIGN IS BASED ON AN ALLOWABLE BEARING PRESSURE OF 1600 PSF. ALLOWABLE BEARING PRESSURE SHALL BE CONFIRMED ONSITE BY A GEOTECHNICAL ENGINEER. IF THE REQUIRED BEARING PRESSURE IS NOT MET THE CONTRACTOR SHALL EXCAVATE 1'-0" MINIMUM AND REPLACE WITH SUITABLE FOUNDATION FILL MATERIAL UNTIL THE REQUIRED BEARING PRESSURE IS ACHIEVED. ALL COSTS TO BE INCLUDED IN THE UNIT PRICE BID FOR ITEM NO. 604-07.30.

2. LOCATE 6" DIAMETER PERFORATED PIPE AT THE LOWEST POINT PRACTICAL FOR PROPER DRAINAGE. PIPE SHALL BE CONNECTED TO AN OUTLET PIPE AT LOW POINTS AND AT A MAXIMUM SPACING OF 200'. SEE TDOT STD-10-1 FOR ADDITIONAL INFORMATION. ALL COSTS TO BE INCLUDED IN THE UNIT PRICE BID FOR ITEM NO. 604-07.30.

3. ALL A440 BARS SHALL HAVE A MINIMUM LAP OF 1'-4".

4. 1" X 1" V-GROOVE CONTRACTION JOINTS ARE TO BE PLACED AT 20' INTERVALS. UNIT OF OPERATION OF CONCRETE PLACEMENT SHALL NOT EXCEED 70 FEET. EXPANSION JOINTS ARE TO BE PLACED AT INTERVALS NOT TO EXCEED 70'. AN EXPANSION JOINT IS REQUIRED AT THE FACE OF THE EXISTING BOX CULVERT.

5. THE RETAINING WALL SHALL BE PAID FOR AT THE UNIT PRICE BID FOR ITEM NO. 604-07.30 RETAINING WALL (LINCOLN STREET). SEE ROADWAY PLANS SHEET 5D FOR LIMITS OF RETAINING WALL AND ELEVATIONS.

6. PROVIDE A MINIMUM OF 6" OF FOUNDATION FILL BETWEEN THE TOP OF THE EXISTING BOX CULVERT AND THE BOTTOM OF THE RETAINING WALL FOOTING, ADJUST BOTTOM OF FOOTING ELEVATION IF NECESSARY. ALL COSTS TO BE INCLUDED IN THE UNIT PRICE BID FOR ITEM NO. 604-07.30.

7. ALL EXPOSED FACES OF RETAINING WALL AND 1'-0" MINIMUM BELOW FINISHED GRADE SHALL RECEIVE APPLIED TEXTURE FINISH, COLOR TO BE CHOSEN BY OWNER. SEE 'APPLIED TEXTURE FINISH NOTES' ON DWG NO. U-64-184. ALL COSTS TO BE INCLUDED IN THE UNIT PRICE BID FOR ITEM NO. 604-07.30.

ESTIMATED QUANTITIES

GRANULAR BACKFILL (RETAINING WALLS) TON	RETAINING WALL EXCAVATION C.Y.	REINFORCING STEEL LB.	CLASS A CONCRETE C.Y.	APPLIED TEXTURE FINISH S.Y.	EPOXY COATED REINFORCING STEEL LB.
84	476	9689	162	118	2228

NOTE: THE QUANTITIES ABOVE ARE FOR ESTIMATING PURPOSES ONLY. ALL COSTS TO BE INCLUDED IN THE UNIT PRICE BID FOR ITEM NO. 604-07.30.

BILL OF STEEL

BAR	SIZE	NO. REQ'D	LENGTH
A440	4	220	40'-0"
A441	4	620	3'-9"
A442	4	448	2'-7"
A443	4	356	6'-0"
H440	4	24	3'-7"
R540E	5	356	6'-0"

NOTE: COST OF B570E AND B571E BARS IN THE RETAINING WALL SHALL BE INCLUDED IN THE UNIT PRICE BID FOR ITEM NO. 620-05.

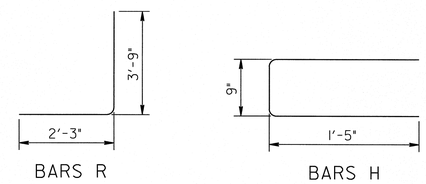

BARS R BARS H

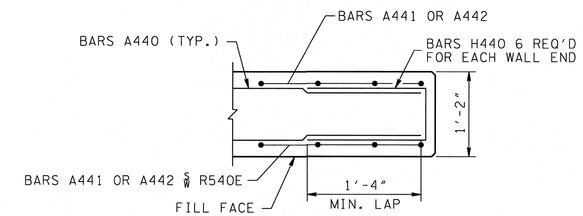

TYPICAL WALL END DETAIL

Not to Scale

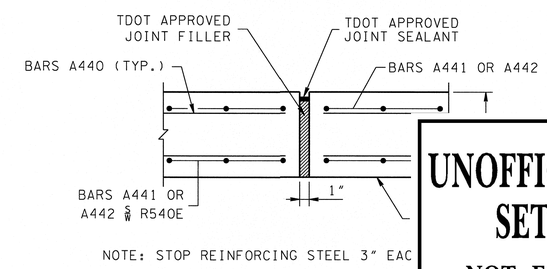

NOTE: STOP REINFORCING STEEL 3" EAC

TYPICAL EXPANSION JOINT

Not to Scale

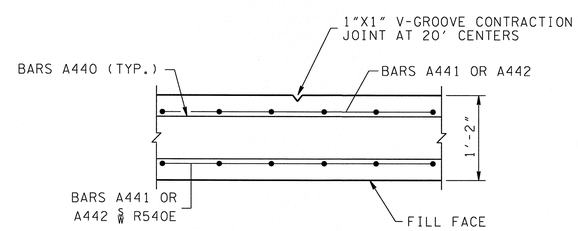

TYPICAL CONTRACTION JOINT DETAIL

Not to Scale

ESTIMATED QUANTITIES
604-07.30
RETAINING WALL (LINCOLN STREET) L.F.
356

UNOFFICIAL SET

NOT FOR BIDDING

STATE OF TENNESSEE
DEPARTMENT OF TRANSPORTATION

RETAINING WALL
SULLIVAN STREET EXT.
OVER MADD BRANCH
BR. I.D. NO. 82038860005
STATION 55+99.00
CITY OF KINGSPORT
SULLIVAN COUNTY
2014

CHAD M. THOMAS REGISTERED ENGINEER 117359 STATE OF TENNESSEE 6/20/14

DESIGNED BY	P. CARDWELL	DATE	05/2014
DRAWN BY	D. ALLEN	DATE	05/2014
SUPERVISED BY	C. THOMAS	DATE	05/2014
CHECKED BY	C. THOMAS	DATE	06/2014

U-64-196

$$$$SYTIME$$$$$$$$
$$$$DONSPEC$$$$$$$$

PROJECT NO.	YEAR	SHEET NO.
82956-3288-04	2014	64

REVISIONS			
NO.	DATE	BY	BRIEF DESCRIPTION

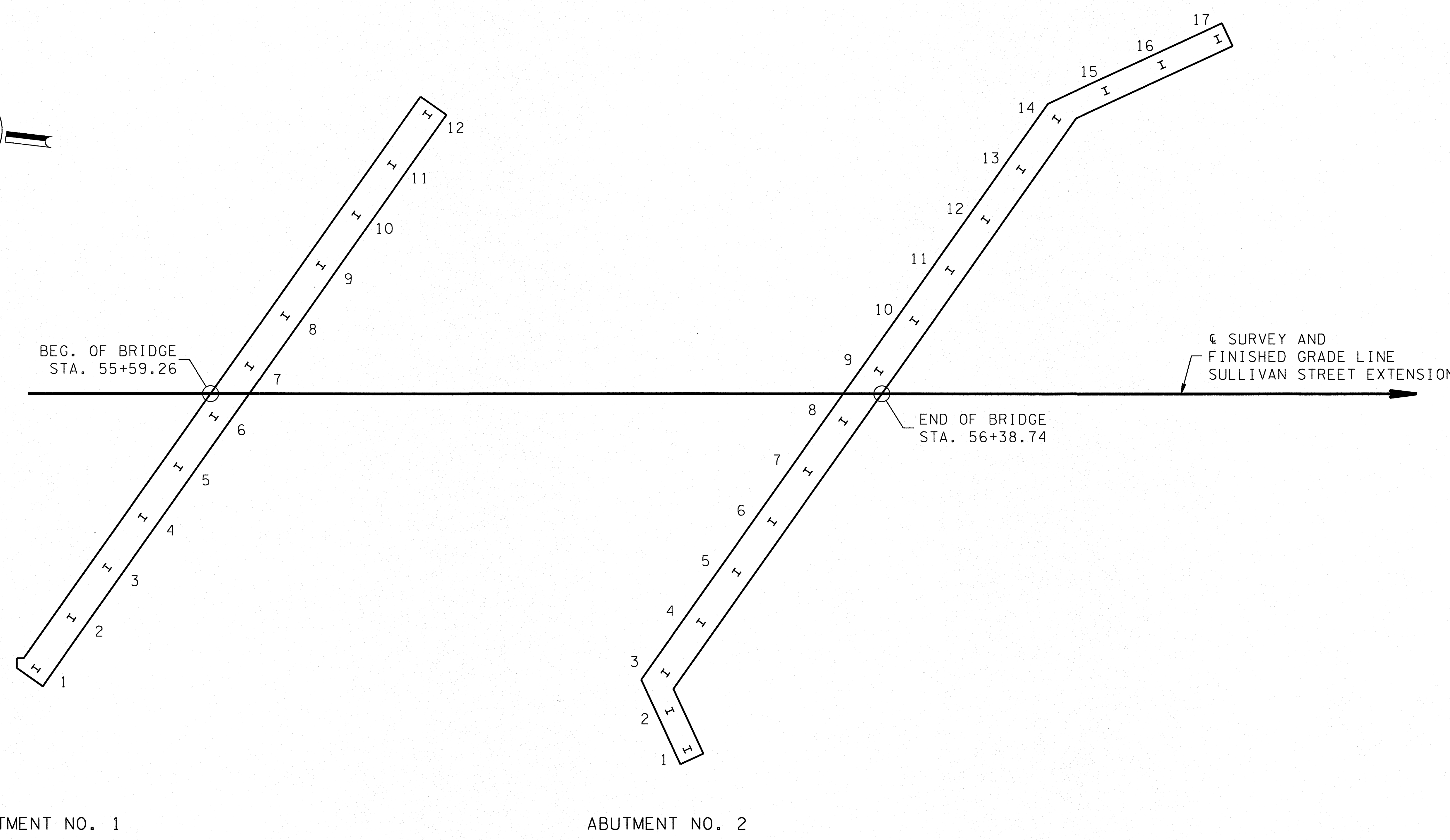

FOUNDATION DATA PLAN

SCALE: 1″ = 10′-0″

ABUTMENT NO. 1			
PILE	PILE CUT-OFF ELEVATION	PILE TIP ELEVATION	IN-PLACE PILE LENGTH
1			
2			
3			
4			
5			
6			
7			
8			
9			
10			
11			
12			

ABUTMENT NO. 2			
PILE	PILE CUT-OFF ELEVATION	PILE TIP ELEVATION	IN-PLACE PILE LENGTH
1			
2			
3			
4			
5			
6			
7			
8			
9			
10			
11			
12			
13			
14			
15			
16			
17			

UNOFFICIAL SET

NOT FOR BIDDING

NOTE TO CONTRACTOR:
THE BLANKS ON THIS SHEET ARE TO BE FILLED BY THE CONSTRUCTION OFFICE AND/OR FIELD ENGINEER GIVING AS BUILT CONDITIONS. AFTER COMPLETION IT IS TO BE SENT TO THE DIVISION OF STRUCTURES TO BECOME PART OF THE FINAL BRIDGE DOCUMENTS.

STATE OF TENNESSEE
DEPARTMENT OF TRANSPORTATION

CHAD M. THOMAS REGISTERED ENGINEER AGRICULTURE COMMERCE No. 117359 STATE OF TENNESSEE 6/20/14

FINAL FOUNDATION DATA
SULLIVAN STREET EXT.
OVER MADD BRANCH
BR. I.D. NO. 82038860005
STATION 55+99.00
CITY OF KINGSPORT
SULLIVAN COUNTY
2014

DESIGNED BY	P. CARDWELL	DATE	05/2014
DRAWN BY	D. ALLEN	DATE	05/2014
SUPERVISED BY	C. THOMAS	DATE	05/2014
CHECKED BY	C. THOMAS	DATE	06/2014

$$$$SYTIME$$$$$$
$$$DGNSPEC$$

U-64-197

PROJECT NO.	YEAR	SHEET NO.
82956-3288-04	2014	65

REVISIONS

NO.	DATE	BY	BRIEF DESCRIPTION

SUPERSTRUCTURE

BAR	LOCATION	SIZE	NO. RQD	BENDING DIMENSIONS A	B	C	D	LENGTH
		EPOXY						
A401E	SLAB	4	374					40'-3"
A402E	SLAB	4	2					4'-5"
A403E	SLAB	4	2					2'-0"
A404E	SLAB	4	2					9'-6"
A410E	SIDEWALK	4	24					40'-3"
A411E	SIDEWALK	4	153					5'-2"
A412E	SIDEWALK	4	14					6'-3"
A501E	SLAB	5	150					33'-4"
A502E	SLAB	5	1	VARIES FROM 32'-8" TO 8'-8" INC. OF 10 11/16" (28 BARS)				578'-8"
A503E	SLAB	5	11					35'-3"
A504E	SLAB	5	1	VARIES FROM 35'-4" TO 8'-8" INC. OF 10 11/16" (31 BARS)				682'-0"
A507E	SLAB	5	2	VARIES FROM 39'-5" TO 2'-1" INC. OF 10 11/16" (43 BARS)				892'-3"
B501E	SLAB	5	150	33'-4"				33'-11"
B502E	SLAB	5	1	A DIM VARIES FROM 32'-8" TO 8'-8" BY 10 11/16" (28 BARS)				595'-0"
B503E	SLAB	5	11					35'-10"
B504E	SLAB	5	1	A DIM VARIES FROM 35'-4" TO 8'-8" BY 10 11/16" (31 BARS)				700'-1"
B505E	SLAB	5	2	40'-7"				41'-2"
B506E	SLAB	5	2	43'-3"				43'-10"
B571E	PARAPET	5	280	3'-9"				4'-4"
B572E	TERMINAL	5	12	5'-0"				5'-7"
B573E	TERMINAL	5	4	A DIM VARIES FROM 4'-1" TO 4'-10" BY 3" (16 BARS)				20'-2"
B574E	TERMINAL	5	4	A DIM VARIES FROM 3'-6" TO 3'-11" BY 2 1/2" (12 BARS)				13'-2"
B575E	TERMINAL	5	2	A DIM VARIES FROM 3'-10" TO 4'-10" BY 2" (14 BARS)				34'-5"
B576E	TERMINAL	5	2	A DIM VARIES FROM 3'-6" TO 3'-9" BY 1 1/2" (6 BARS)				12'-8"
CD630E	SLAB	6	1	44'-8"	2'-1"	1'-9 3/4"		46'-9"
CD631E	SLAB	6	1	45'-5"	11"	10"		46'-4"
CD632E	SLAB	6	1	44'-8"	1'-7"	9 1/2"		46'-3"
CD633E	SLAB	6	1	44'-8"	8"	4 3/4"		45'-4"
D507E	SLAB	5	2	A DIM VARIES FROM 39'-5" TO 2'-1" BY 10 11/16" (43 BARS)				942'-5"
		REGULAR						
A540	DIAPHRAGM	5	16					6'-0"
A541	DIAPHRAGM	5	48					6'-9"
L440	DIAPHRAGM	4	56	8"	1'-0"	2'-3"		6'-10"

ABUTMENT NO. 1

BAR	LOCATION	SIZE	NO. RQD	BENDING DIMENSIONS A	B	C	D	LENGTH
		EPOXY						
A620E	ENDWALL	6	168					4'-6"
R620E	ENDWALL	6	84	2'-0"	2'-0"			4'-0"
		REGULAR						
A421	ENDWALL	4	2					41'-5"
A520	FOOTING	5	4					43'-3"
A620	ENDWALL	6	24					43'-10"
A720	FOOTING	7	16					43'-3"
CD420	WINGWALL	4	8	6'-4"	3'-0"	1'-6"		9'-4"
CD820	WINGWALL	8	10	5'-9"	7'-1"	3'-6"		12'-10"
H421	SEAT	4	24	1'-9"	2'-0"			5'-9"
H422	SEAT	4	24	2'-0"	2'-0"			6'-0"
H520	ENDWALL	5	83	2'-0"	6"			3'-0"
H620	ENDWALL	6	84	1'-0"	4'-11"			10'-10"
HA620	ENDWALL	6	45	1'-4"	2'-5"	1'-6"		5'-3"
HA621	ENDWALL	6	6	8"	1'-11"	1'-6"		4'-1"
LS420	WINGWALL	4	9	1'-0"	5'-7"			13'-11"
LS520	FOOTING	5	90	3'-3"	2'-6"			12'-5"

ABUTMENT NO. 2

BAR	LOCATION	SIZE	NO. RQD	BENDING DIMENSIONS A	B	C	D	LENGTH
		EPOXY						
A630E	ENDWALL	6	174					4'-6"
R630E	ENDWALL	6	87	2'-0"	2'-0"			4'-0"
		REGULAR						
A431	ENDWALL	4	2					40'-8"
A530	FOOTING	5	4					44'-0"
A531	FOOTING	5	2					22'-6"
A532	FOOTING	5	2					10'-7"
A533	WINGWALL	5	2					19'-0"
A534	WINGWALL	5	2					7'-8"
A630	ENDWALL	6	24					44'-8"
A730	FOOTING	7	16					44'-0"
A731	FOOTING	7	8					22'-6"
A732	FOOTING	7	8					10'-7"
CD531	WINGWALL	5	5	19'-9"	3'-0"	2'-7"		22'-9"
CD532	WINGWALL	5	5	18'-7"	3'-9"	3'-3"		22'-4"
CD533	WINGWALL	5	1	16'-10"	3'-0"	2'-7"		19'-10"
CD534	WINGWALL	5	1	15'-8"	3'-9"	3'-3"		19'-5"
CD535	WINGWALL	5	5	8'-7"	3'-0"	1'-6"		11'-7"
CD536	WINGWALL	5	5	7'-9"	3'-0"	1'-6"		10'-9"
CD730	FOOTING	7	6	3'-9"	3'-9"	3'-3"		7'-6"
CD731	FOOTING	7	6	3'-9"	3'-9"	1'-10 1/2"		7'-6"
H431	SEAT	4	24	1'-9"	2'-0"			5'-9"
H432	SEAT	4	24	2'-0"	2'-0"			6'-0"
H530	ENDWALL	5	81	2'-0"	6"			3'-0"
H531	WINGWALL	5	1	7"	B DIM VARIES FROM 6'-5" TO 5'-2" BY 3/4" (20 BARS)			243'-4"
H532	WINGWALL	5	1	7"	B DIM VARIES FROM 6'-2" TO 4'-11" BY 1 7/8" (9 BARS)			105'-0"
H630	ENDWALL	6	87	1'-0"	4'-11"			10'-10"
HA630	ENDWALL	6	45	1'-4"	2'-5"	1'-6"		5'-3"
HA631	ENDWALL	6	4	8"	1'-11"	1'-6"		4'-11"
LS530	FOOTING	5	91	3'-3"	2'-6"			12'-5"
LS531	FOOTING	5	34	2'-6"	2'-6"			10'-11"

NOTE:

BAR NUMBERS ARE REPEATED ON BILL OF STEEL FOR EACH SUBSTRUCTURE, THEREFORE IT WILL BE NECESSARY FOR THE SUPPLIER TO SHIP THE BARS TO THE JOB SITE WITH THE SUBSTRUCTURE DESIGNATION INCLUDED AS PART OF THE LABEL.

REINFORCING STEEL CODE

TYPE	SIZE	SERIES
A	5	06

NOTE: DIMENSION SHOWN ON THIS SHEET ARE OUTSIDE TO OUTSIDE OF BAR. STANDARD C.R.S.I. HOOK DETAILS SHALL APPLY, EXCEPT AS NOTED.

NOTE: THE SUFFIX "E" FOR BARS SO MARKED DENOTES EPOXY COATED REINFORCEMENT.

UNOFFICIAL SET
NOT FOR BIDDING

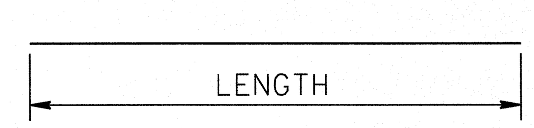

BARS A

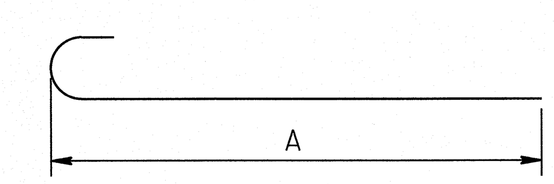

BARS B

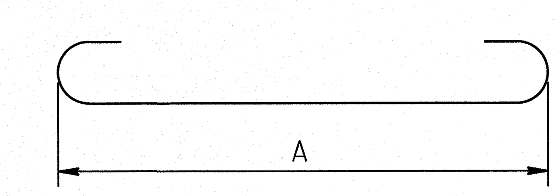

BARS D

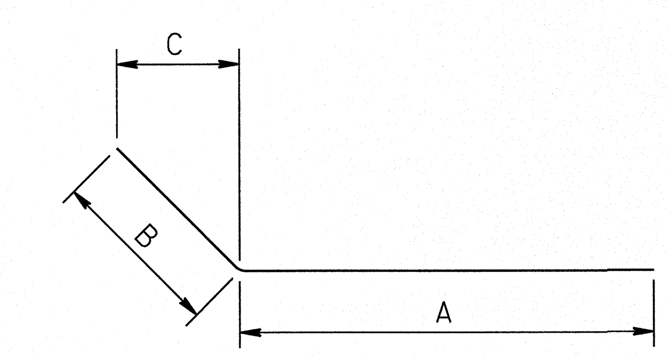

BARS CD

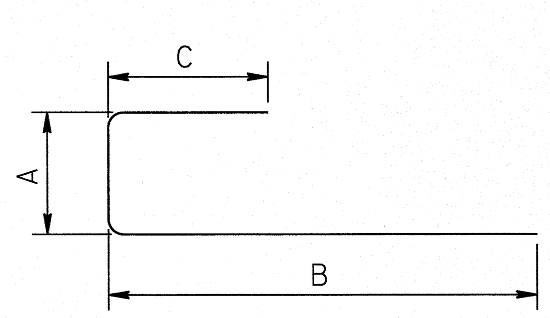

BARS HA

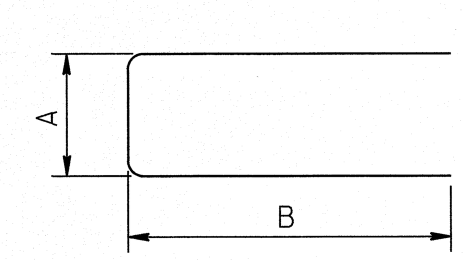

BARS H

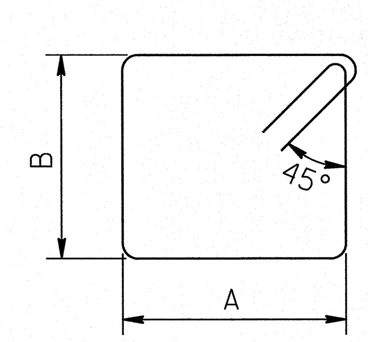

BARS LS

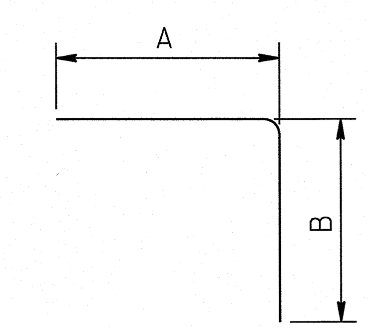

BARS R

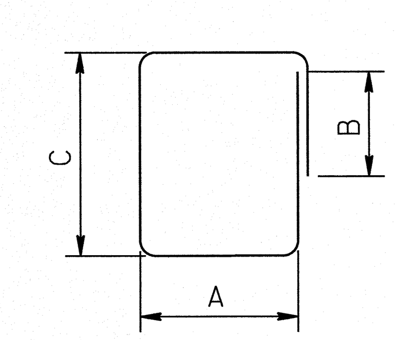

BARS L

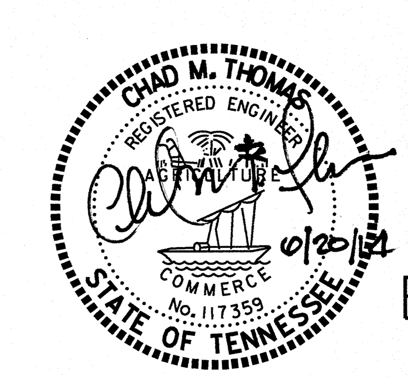

STATE OF TENNESSEE
DEPARTMENT OF TRANSPORTATION

BILL OF STEEL
SULLIVAN STREET EXT.
OVER MADD BRANCH
BR. I.D. NO. 82038860005
STATION 55+99.00
CITY OF KINGSPORT
SULLIVAN COUNTY
2014

DESIGNED BY	P. CARDWELL	DATE	05/2014
DRAWN BY	D. ALLEN	DATE	05/2014
SUPERVISED BY	C. THOMAS	DATE	05/2014
CHECKED BY	C. THOMAS	DATE	06/2014

$$$$SYTIME$$$$$$
$$$$DGNSPEC$$$$$$

U-64-198

PROJECT NO.	YEAR	SHEET NO.
STP-126(19)	2014	70

REVISIONS

NO.	DATE	BY	BRIEF DESCRIPTION

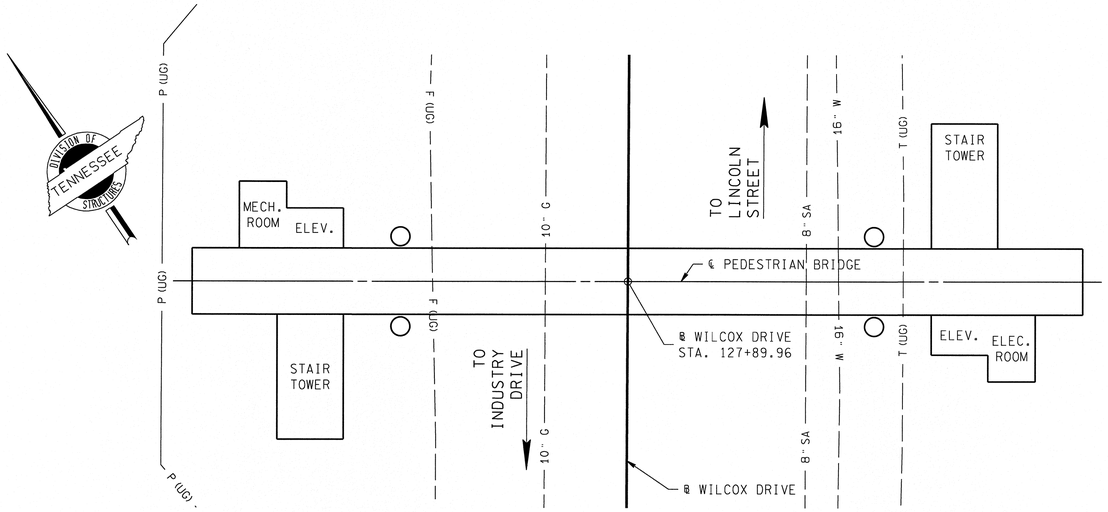

LAYOUT

SCALE: 1/16" = 1'-0"

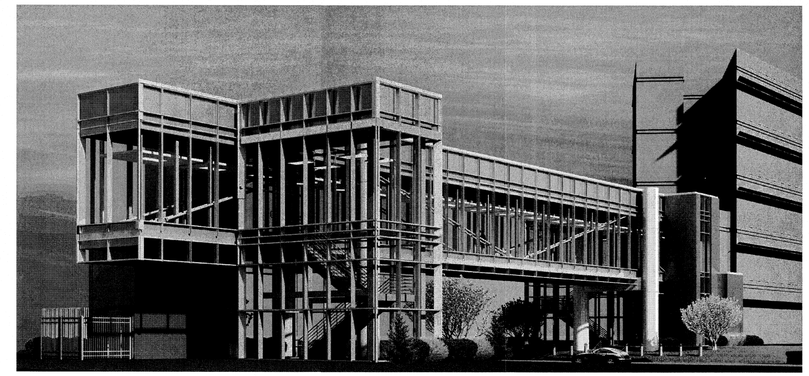

RENDERED ELEVATION

NOT TO SCALE

LIST OF DRAWINGS

STRUCTURAL

DRAWING NO.	DESCRIPTION	LAST REV. DATE
U-64-136	LAYOUT OF BRIDGE	---
U-64-137	ESTIMATED QUANTITIES, BILL OF STEEL, AND KEY PLAN	
U-64-138	GENERAL NOTES	
U-64-139	GENERAL NOTES	
U-64-140	FOUNDATION LAYOUT	
U-64-141	PIERS - DETAILS	
U-64-142	TRUSS - FRAMING PLANS	
U-64-143	TRUSS - ELEVATION AND CAMBER DIAGRAM	
U-64-144	TRUSS - DETAILS	
U-64-145	TRUSS - BEARING DETAILS	
U-64-146	STAIR TOWER - DETAILS	
U-64-147	STAIR TOWER - DETAILS	
U-64-148	ELEVATOR AND MECH./ELEC. ROOMS - DETAILS	
U-64-149	ELEVATOR AND MECH./ELEC. ROOMS - DETAILS	
U-64-150	ENGINEERING GEOLOGY	

ARCHITECTURAL

DRAWING NO.	DESCRIPTION	LAST REV. DATE
U-64-151	LEGEND AND DATA	---
U-64-152	KEY PLAN/QUANTITIES	
U-64-153	SITE PLAN	
U-64-154	SITE/LANDSCAPE	
U-64-155	1ST FLOOR PLAN	
U-64-156	BRIDGE FLOOR PLAN	
U-64-157	ROOF PLAN	
U-64-158	ROOF DETAILS	
U-64-159	BRIDGE ELEVATION	
U-64-160	CMU ELEV. 280	
U-64-161	CMU ELEV. CBC	
U-64-162	BUILDING SECTIONS	
U-64-163	BUILDING SECTIONS	
U-64-164	BUILDING SECTIONS	
U-64-165	WALL SECTIONS	
U-64-166	GLAZING DETAILS	
U-64-167	DOOR SCHEDULE	
U-64-168	FINISH PLAN	
U-64-169	1ST FLOOR RCP PLAN	
U-64-170	BRIDGE LEVEL RCP	

MECHANICAL

DRAWING NO.	DESCRIPTION	LAST REV. DATE
U-64-171	FIRST FLOOR PLAN	---
U-64-172	BRIDGE FLOOR PLAN	
U-64-173	SCHEDULES AND DETAILS	

PLUMBING

DRAWING NO.	DESCRIPTION	LAST REV. DATE
U-64-174	FIRST FLOOR PLAN	---
U-64-175	BRIDGE FLOOR PLAN	
U-64-176	LEGEND, SCHEDULES, AND DETAILS	

FIRE PROTECTION

DRAWING NO.	DESCRIPTION	LAST REV. DATE
U-64-177	FIRST FLOOR PLAN	---
U-64-178	BRIDGE FLOOR PLAN	
U-64-179	LEGEND, SCHEDULES, AND DETAILS	

ELECTRICAL

DRAWING NO.	DESCRIPTION	LAST REV. DATE
U-64-180	FIRST FLOOR PLAN	---
U-64-181	BRIDGE FLOOR PLAN	
U-64-182	LEGEND, SCHEDULES, AND DETAILS	

LIST OF TDOT STANDARD DRAWINGS

DRAWING NO.	DESCRIPTION	LAST REV. DATE
STD 6-2	STANDARD SEISMIC DETAILS	11-07-94

LIST OF SPECIAL PROVISIONS	PROV. NO.	LAST REV. DATE
DRILLED SHAFT SPECIFICATIONS	625	MARCH 1, 2006

UNOFFICIAL SET

NOT FOR BIDDING

STEVEN R. ALVIS REGISTERED ENGINEER AGRICULTURE COMMERCE No. 117318 STATE OF TENNESSEE

6/9/14

STATE OF TENNESSEE
DEPARTMENT OF TRANSPORTATION

LAYOUT OF BRIDGE
PEDESTRIAN BRIDGE
OVER WILCOX DRIVE
BR. I.D. NO. 82SR1260017
STATION 127+89.96
CITY OF KINGSPORT
SULLIVAN COUNTY
2014

DESIGNED BY	S. ALVIS	DATE	05/2014
DRAWN BY	D. ALLEN	DATE	05/2014
SUPERVISED BY	C. THOMAS	DATE	05/2014
CHECKED BY	S. CAMPBELL	DATE	05/2014

6/19/2014 9:58:12 AM
V:\3131G\Pedestrian Bridge\Drawings\Construction\Title.dgn

PROJECT NO.	YEAR	SHEET NO.
STP-126(19)	2014	71

REVISIONS

NO.	DATE	BY	BRIEF DESCRIPTION

ESTIMATED QUANTITIES
PEDESTRIAN BRIDGE ONLY

DESCRIPTION	UNIT	TOTAL QUANTITY	
STRUCTURAL STEEL	LB.	173,000	1
PAINTING STEEL STRUCTURES	L.S.	1	
CONTAINMENT AND DISPOSAL OF WASTE	L.S.	1	2
STEEL BAR REINFORCEMENT	LB.	15,500	
CLASS 'D' CONCRETE	C.Y.	82	3
DRILLED SHAFT - SOIL (4 FT)	V.F.	80	
DRILLED SHAFT - ROCK (4 FT)	V.F.	28	4
DRILLED SHAFT CONCRETE	C.Y.	51	5
DRILLED SHAFT REINFORCING STEEL	LB.	20,600	
STRUCTURAL BUILDING MATERIALS	L.S.	1	6
ARCHITECTURAL BUILDING MATERIALS	L.S.	1	7

NOTE: THE QUANTITIES ABOVE ARE PROVIDED TO THE CONTRACTOR FOR INFORMATION PURPOSES ONLY. ALL COSTS ASSOCIATED WITH THE PEDESTRIAN BRIDGE SHALL BE PAID FOR AT THE LUMP SUM PRICE BID FOR ITEM 602-03.02, 'PEDESTRIAN BRIDGE'.

FOOTNOTES

1. THIS ITEM INCLUDES ALL LABOR, MATERIALS, AND EQUIPMENT NECESSARY TO FABRICATE, FURNISH, AND ERECT ALL STRUCTURAL STEEL AS SPECIFIED INCLUDING, BUT NOT LIMITED TO, BEAMS, BRACING, BOLTS, BEARINGS, AND SPLICES. ALL STEEL CONNECTIONS SHALL MEET THE MINIMUM REQUIREMENTS SHOWN AND SHALL BE DESIGNED BY A PROFESSIONAL ENGINEER LICENSED IN THE STATE OF TENNESSEE. SEE GENERAL NOTES FOR SUBMITTAL REQUIREMENTS.

2. THIS ITEM INCLUDES ALL LABOR, MATERIALS AND EQUIPMENT NECESSARY TO FURNISH, ERECT AND MAINTAIN A CONTAINMENT SYSTEM FOR USE DURING PAINTING OPERATIONS. THE CONTAINMENT SYSTEM SHALL BE CAPABLE OF COLLECTING ALL WASTE MATERIALS INCLUDING, BUT NOT LIMITED TO DRIPS, SPILLS AND/OR OVERSPRAY, ASSOCIATED WITH THE PAINTING OPERATIONS AND KEEPING THESE MATERIALS FROM ENTERING THE ENVIRONMENT PER SECTION 603.12 OF THE SPECIFICATIONS. THIS ITEM INCLUDES THE DISPOSAL OF ALL WASTE MATERIALS COLLECTED DURING PAINTING OPERATIONS.

3. THIS ITEM INCLUDES ALL LABOR, MATERIALS AND EQUIPMENT NECESSARY TO PLACE CONCRETE FOR ALL ELEMENTS IN PEDESTRIAN BRIDGE.

4. THIS ITEM INCLUDES INSTALLATION OF FOUNDATION PROBE HOLES AS REFERENCED IN THE GENERAL NOTES AND IN TDOT SPECIAL PROVISION 625.

5. THIS ITEM INCLUDES ALL LABOR, MATERIALS AND EQUIPMENT NECESSARY TO PLACE CLASS 'D' CONCRETE, f'c = 4000 PSI, FOR THE DRILLED SHAFTS. CONCRETE SHALL BE IN ACCORDANCE WITH SECTION 604 OF THE STANDARD SPECIFICATIONS.

6. THIS ITEM INCLUDES ALL OTHER STRUCTURAL ITEMS NOT SPECIFICALLY LISTED UNDER ESTIMATED QUANTITIES FOR THE PEDESTRIAN BRIDGE.

7. THIS ITEM INCLUDES ALL OTHER ITEMS AS SHOWN ON THE ARCHITECTURAL SHEETS, INCLUDING MECHANICAL, PLUMBING, FIRE PROTECTION, AND ELECTRICAL DRAWINGS.

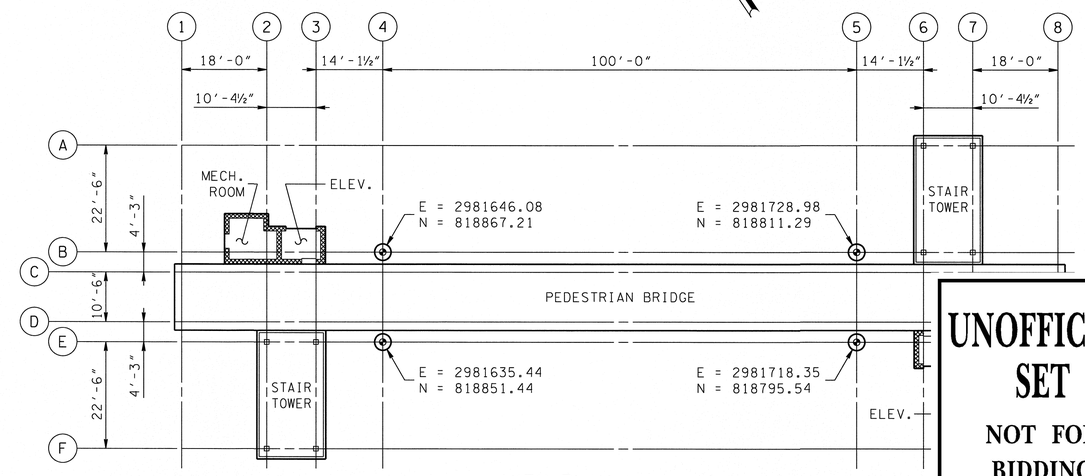

KEY PLAN
SCALE: 1/16" = 1'-0"

UNOFFICIAL SET
NOT FOR BIDDING

BILL OF STEEL - PIERS (REGULAR)
PEDESTRIAN BRIDGE ONLY

BAR	LOCATION	SIZE	NO. ROD	BENDING DIMENSIONS A	B	C	D	LENGTH
A501	BEAM	5	8					20'-9"
A700	COLUMN	7	100					20'-3"
A800	COLUMN	8	100					24'-3"
B900	COLUMN	9	50	41'-3"				42'-6"
B902	COLUMN	9	50	36'-9"				38'-0"
CH801	BEAM	8	64	20'-9"				23'-0"
LS401	BEAM	4	108	2'-2"	2'-8"			10'-5"
M500	COLUMN	5	2	69'-6"	3'-2"	5"		1692'-9"
M502	COLUMN	5	2	65'-6"	3'-2"	5"		1603'-2"

NOTE:

BAR NUMBERS ARE REPEATED ON BILL OF STEEL FOR EACH SUBSTRUCTURE, THEREFORE IT WILL BE NECESSARY FOR THE SUPPLIER TO SHIP THE BARS TO THE JOB SITE WITH THE SUBSTRUCTURE DESIGNATION INCLUDED AS PART OF THE LABEL.

REINFORCING STEEL CODE

TYPE	SIZE	SERIES
A	5	06

NOTE: DIMENSION SHOWN ON THIS SHEET ARE OUTSIDE TO OUTSIDE OF BAR. STANDARD C.R.S.I. HOOK DETAILS SHALL APPLY, EXCEPT AS NOTED.

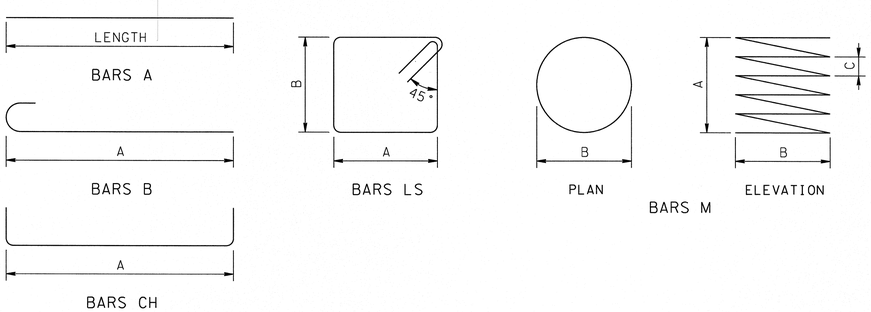

SPIRAL BARS SHALL CONFORM TO THE DIAMETER 'B' WHOSE VALUE IS GIVEN IN THE DIMENSION TABLE, WHEN PLACED IN POSITION AT PITCH 'C' SHOWN ON PLANS. LENGTH SHOWN IN THE REINFORCING STEEL SCHEDULE IS FOR CONTINUOUS BARS WITH 1½ FINISHING TURNS AT EACH END, WITH NO ALLOWANCE FOR LAPS.

STATE OF TENNESSEE
DEPARTMENT OF TRANSPORTATION

ESTIMATED QUANTITIES
PEDESTRIAN BRIDGE
OVER WILCOX DRIVE
BR. I.D. NO. 82SR1260017
STATION 127+89.96
CITY OF KINGSPORT
SULLIVAN COUNTY
2014

STEVEN R. ALVIS
REGISTERED ENGINEER
No. 117318
STATE OF TENNESSEE
6/19/14

DESIGNED BY	S. ALVIS	DATE	05/2014
DRAWN BY	D. ALLEN	DATE	05/2014
SUPERVISED BY	C. THOMAS	DATE	05/2014
CHECKED BY	S. CAMPBELL	DATE	05/2014

6/19/2014 9:56:15 AM
V:\3130\Pedestrian Bridge\Drawings\Construction\Quantities.dgn

U-64-137

GENERAL NOTES

SPECIFICATIONS: STANDARD ROAD AND BRIDGE SPECIFICATIONS OF THE TENNESSEE DEPARTMENT OF TRANSPORTATION (MARCH 1, 2006)

DESIGN LOADS:

ROOF LOADS:

GROUND SNOW LOAD	15 PSF
CONTAINED SNOW LOAD	16 PCF
EPDM ROOF+DECK+INSULATION	5 PSF
STEEL ROOF DECK	3 PSF
MECHANICAL, ELECTRICAL, PLUMBING, SUSPENDED CEILING	5 PSF
GLASS CURTAINWALL	13 PSF

FLOOR LOADS:

LIVE LOADS:	
STAIRS, CORRIDORS, AND EGRESS AREAS	100 PSF
PEDESTRIAN LOAD	90 PSF
MECHANICAL, ELECTRICAL, PLUMBING, COVERING	10 PSF
DEAD LOADS:	
GLASS CURTAINWALL	13 PSF
3-1/2" CONCRETE SLAB & METAL DECK	37 PSF

SHOP DRAWINGS: SEE SECTION 105.02 OF THE STANDARD SPECIFICATIONS.

THESE PLANS ARE INCOMPLETE UNLESS ACCOMPANIED BY THE SUPPLEMENTAL SPECIFICATIONS AND SPECIAL PROVISIONS INCLUDED IN THE CONTRACT DOCUMENTS.

ALL NEW CONCRETE CONSTRUCTION SHALL BE CLASS "D", f'c = 4000 PSI, EXCEPT AS NOTED OTHERWISE AND SHALL BE IN ACCORDANCE WITH SECTION 604 OF THE STANDARD SPECIFICATIONS.

BRIDGE DECK FINISH SHALL BE TROWEL FINISHED.

REINFORCING BARS SHALL CONFORM TO ASTM A615 GRADE 60 UNLESS NOTED OTHERWISE. SEE SECTION 604 AND 907 OF THE STANDARD SPECIFICATIONS.

MATERIAL DESIGN STRENGTHS:

REINFORCING STEEL. DEFORMED (ASTM A615, GR. 60)	Fy = 60,000 PSI
WELDED WIRE FABRIC (ASTM A185)	Fy = 65,000 PSI
CONCRETE MASONRY UNITS (ASTM C90 TYPE 1):	
WALLS (TYPE S MORTAR)	F'm = 1,500 PSI
GROUT FOR MASONRY WALLS (ASTM C476)	F'c = 2,500 PSI
SOIL BEARING CAPACITY	2,000 PSF

ALL STRUCTURAL STEEL SHALL BE IN ACCORDANCE WITH SECTION 602 OF THE STANDARD SPECIFICATIONS. STEEL GRADES SHALL BE AS FOLLOWS:

W-SHAPES:	A992
HSS:	A500 GR. B
CHANNELS AND ANGLES:	A36
PINS:	A36 OR BETTER

ALL WELDING SHALL BE IN ACCORDANCE WITH ANSI/AASHTO/AWS D1.5-LATEST EDITION BRIDGE WELDING CODE, SECTION 602 OF THE STANDARD SPECIFICATIONS, AND NOTES ON THE DRAWINGS.

BEARING DEVICES SHALL BE IN ACCORDANCE WITH THE DETAILS AND DIMENSIONS SHOWN ON DWG. NO. U-64-145.

THE LOCATION OF UTILITIES, INCLUDING UNDERGROUND UTILITIES, IS INDICATED ON THE DRAWINGS INSOFAR AS THEIR EXISTENCE AND LOCATION WERE KNOWN AT THE TIME OF PREPARATION OF THE DRAWINGS. HOWEVER, NOTHING IN THESE CONTRACT DOCUMENTS SHALL BE CONSTRUED AS A GUARANTEE THAT SUCH UTILITIES ARE IN THE LOCATION INDICATED OR THAT THEY ACTUALLY EXIST, OR THAT OTHER UTILITIES ARE NOT WITHIN THE AREA OF OPERATIONS.

THE CONTRACTOR SHALL MAKE NECESSARY INVESTIGATIONS TO DETERMINE THE EXISTENCE AND LOCATIONS OF SUCH UTILITIES. THE CONTRACTOR SHALL PAY FOR ANY DAMAGE TO AND FOR MAINTENANCE OF PROTECTION OF EXISTING UTILITIES AND STRUCTURES INCLUDING WATER SERVICES, SEWER LATERALS, TELEPHONE, POWER, AND FIBER OPTIC LINES. THE CONTRACTOR SHALL, PRIOR TO PIER INSTALLATION OPERATIONS, LOCATE AND EXPOSE THE UNDERGROUND FIBER OPTIC/TELEPHONE CONDUIT BELOW OR NEAR ANY FOUNDATION OR CASSION.

BEFORE THE WORK IS STARTED, THE CONTRACTOR SHALL NOTIFY ALL COMPANIES, CORPORATIONS, MUNICIPALITIES, AND INDIVIDUALS WHO OWN UTILITIES ON THE CONSTRUCTION SITE, IN THE RIGHT-OF-WAY OR IMMEDIATELY ADJACENT TO THE CONSTRUCTION AREA IF THOSE UTILITIES MAY BE AFFECTED BY THE WORK. THE CONTRACTOR SHALL ARRANGE TO HAVE THE VARIOUS UTILITIES LOCATED AND TO HAVE THEM REMOVED OR RELOCATED AS REQUIRED, OR TO DETERMINE THE METHOD OF PROTECTION ACCEPTABLE TO THE RESPECTIVE OWNER, IF THE METHOD OF PROTECTION IS NOT SPECIFIED HEREINAFTER. ANY COST INCURRED WITH REMOVING, RELOCATING OR PROTECTING UTILITIES SHALL BE BORNE BY THE CONTRACTOR UNLESS INDICATED OTHERWISE. THE CONTRACTOR SHALL WORK WITH AND ASSIST THE CITY (OR UTILITY OWNER) BY COORDINATING ALL UTILITY RELOCATION OPERATIONS.

THE CONTRACTOR SHALL REPAIR OR REPLACE ANY EXISTING SANITARY SEWER, WATER, OR STORM DRAIN UTILITY DAMAGED OR MISALIGNED DURING OR DUE TO THE WORK. ALL OTHER UTILITIES WHICH ARE DAMAGED OR MISALIGNED SHALL BE REPAIRED OR REPLACED BY THE RESPECTIVE UTILITY COMPANY(S) AT THE EXPENSE OF THE CONTRACTOR.

ANY AREA THAT IS DISTURBED OUTSIDE THE LIMITS OF THE CONSTRUCTION DURING THE LIFE OF THE PROJECT SHALL BE REPAIRED BY THE CONTRACTOR AT HIS EXPENSE.

THE CONTRACTOR SHALL REMOVE ALL MATERIAL FROM THE SITE AND SHALL BE RESPONSIBLE FOR LAWFUL AND PROPER DISPOSAL OF ALL REMOVED MATERIAL. THE CONTRACTOR SHALL COMPLY WITH ALL STATE AND LOCAL LAWS.

GENERAL NOTES - CONTINUED

THE CONTRACTOR SHALL COORDINATE ALL WORK WITHIN THE VICINITY OF EXISTING UTILITIES (WATER, GAS, ETC.) WITH THE RESPECTIVE UTILITY COMPANY. ALL COORDINATION OF UTILITY SERVICE IS THE RESPONSIBILITY OF THE CONTRACTOR. THE WORK SHALL BE CONDUCTED IN ACCORDANCE WITH THE RULES AND REGULATIONS OF THE RESPECTIVE UTILITY COMPANY. TEMPORARY BRACING OR SUPPORTS SHALL BE INSTALLED AS NEEDED TO SUFFICIENTLY SUPPORT AND/OR PROTECT UTILITY LINES, ETC. DURING CONSTRUCTION, AND ANY DAMAGE TO THE UTILITIES/CONDUITS SHALL BE REPAIRED AT THE CONTRACTOR'S EXPENSE. ALL METHODS FOR SUPPORTING AND MAINTAINING THE EXISTING UTILITIES SHALL BE SUBJECT TO THE APPROVAL OF THE RESPECTIVE UTILITY COMPANY AND THE OWNER. ANY UTILITIES REMOVED AS PART OF THE WORK, AND NOT INDICATED TO BE REMOVED OR ABANDONED, SHALL BE RESTORED USING MATERIALS AND INSTALLATION EQUAL TO THE UTILITY'S STANDARDS.

THE CONTRACTOR SHALL SUBMIT AND IMPLEMENT AN ENVIRONMENTAL PROTECTION PLAN IN ACCORDANCE WITH SECTION 603.12 OF TDOT'S ROAD AND BRIDGE STANDARDS, 1997, REGARDLESS OF QUANTITIES INVOLVED.

ALL STEEL CONNECTIONS SHALL MEET THE MINIMUM REQUIREMENTS AS SHOWN ON THE PLANS AND SHALL BE DESIGNED BY A LICENSED PROFESSIONAL ENGINEER WORKING FOR THE FABRICATOR. CONNECTION CALCULATIONS SHALL BE SUBMITTED WITH THE STEEL SHOP DRAWINGS AND BE SEALED BY A REGISTERED PROFESSIONAL ENGINEER LICENSED IN THE STATE OF TENNESSEE.

THE STEEL FABRICATOR SHALL FOLLOW THE AISC CODE OF STANDARD PRACTICE.

SUBSURFACE INVESTIGATION BASED ON REPORT BY S&ME REPORT DATED FEB. 27, 2014 PROJECT NO. 1401-13-103-D.

DRILLED SHAFT (CAISSON) CONSTRUCTION OPERATIONS SHALL BE PERFORMED BY A CONTRACTOR SPECIALIZING IN THIS TYPE OF CONSTRUCTION WITH EXPERIENCE IN THE GEOLOGY OF EASTERN TENNESSEE. HOLES SHALL BE TEMPORARILY CASED TO MAINTAIN THE SHAFT GEOMETRY DURING CONSTRUCTION AND PROVIDE SAFE ACCESS. THE CONTRACTOR SHALL INSTALL A PROBE HOLE IN EACH DRILLED SHAFT BOTTOM TO A DEPTH OF AT LEAST 2 TIMES THE SHAFT DIAMETER, BUT NO MORE THAN 8 FEET TO ALLOW EVALUATION OF THE BEARING CONDITIONS. THE DRILLED SHAFT CONTRACTOR SHOULD BE PREPARED TO INSTALL TEMPORARY DEWATERING PUMPS TO PROVIDE ACCESS FOR CLEANING AND INSPECTION, AND PROVIDE CONDITIONS FOR FREE-FALL CONCRETE PLACEMENT. A REPRESENTATIVE OF THE GEOTECHNICAL ENGINEER (S&ME INC.) SHALL BE PRESENT DURING CONSTRUCTION TO VERIFY THE DRILLING DEPTHS, EMBEDMENT, AND CONSTRUCTION TECHNIQUES. THE REPRESENTATIVE OF THE GEOTECHNICAL ENGINEER SHALL ALSO PERFORM THE TESTING REQUIRED BY THE GEOTECHNICAL REPORT.

ALL PIERS, FOOTINGS, AND INDIVIDUAL PILE CAPS ARE LOCATED ON COLUMN CENTERLINES UNLESS OTHERWISE NOTED.

SEE ARCHITECTURAL, MECHANICAL, ELECTRICAL AND/OR EQUIPMENT MANUFACTURER'S DRAWINGS FOR SIZES AND/OR LOCATION OF ANCHOR BOLTS, SLEEVES, OPENINGS, OR EMBEDMENTS IN CONCRETE OR GRATING, EQUIPMENT PADS, SUPPORT FRAMES, OR ATTACHMENTS TO STRUCTURAL STEEL. CONTRACTOR SHALL COORDINATE AND VERIFY SIZE AND LOCATION OF ALL ANCHOR BOLTS, SLEEVES, OPENINGS, ETC. TO SUIT EQUIPMENT PROVIDED. THE DIMENSIONS OF ALL STRUCTURAL SUPPORTS SHALL BE VERIFIED BY THE CONTRACTOR FOR EQUIPMENT PROVIDED. BOLT EQUIPMENT TO SUPPORTS PER MANUFACTURER'S RECOMMENDATIONS. PROVIDE ANCHOR BOLTS AS REQUIRED TO SUIT THE EQUIPMENT PROVIDED.

ALL INFORMATION ON EXISTING CONDITIONS IS OBTAINED FROM BEST AVAILABLE SOURCES. THE ACTUAL AS-BUILT CONSTRUCTION MAY POSSIBLY DIFFER FROM WHAT IS ASSUMED IN THE CONTRACT DOCUMENTS. THE CONTRACTOR SHALL VERIFY ALL EXISTING CONDITIONS NOTED ON THE CONTRACT DOCUMENTS, AND SHALL NOTIFY THE ENGINEER IN WRITING OF ANY DISCREPANCIES BETWEEN THE EXISTING CONDITIONS AND THE CONTRACT DOCUMENTS.

THE CONTRACTOR SHALL REQUEST IN WRITING AND HIGHLIGHT ON THE SHOP DRAWINGS ANY PROPOSED CHANGES IN THE MATERIALS, DETAILS, ETC. INDICATED ON THE DRAWINGS OR SPECIFICATIONS. ANY CHANGES MUST BE APPROVED BY THE ENGINEER IN WRITING.

THE DESIGN, ADEQUACY, AND SAFETY OF ERECTION BRACING, SHORING, TEMPORARY SUPPORTS, ETC. IS THE SOLE RESPONSIBILITY OF THE CONTRACTOR.

STEEL:

ALL STRUCTURAL STEEL CONNECTIONS SHALL BE SLIP CRITICAL-TYPE BOLTED FRAMED BEAM CONNECTIONS, UNLESS OTHERWISE NOTED. BEAM SHEAR CONNECTIONS SHALL BE DESIGNED FOR AN END REACTION EQUAL TO THE ALLOWABLE UNIFORM LOAD DIVIDED BY 2, AS INDICATED IN THE 14TH EDITION AISC MANUAL OF STEEL CONSTRUCTION, PLUS 2 KIPS, UNLESS OTHERWISE NOTED. THE MINIMUM END REACTION FOR ANY CONNECTION SHALL BE 15KIPS.

ALL STRUCTURAL STEEL BOLTS SHALL BE 7/8" DIAMETER HIGH STRENGTH BOLTS (A-325) OR BETTER UNLESS OTHERWISE NOTED.

ALL EXTERIOR BOLTS, ANCHOR BOLTS, AND THROUGH-WALL THREADED RODS SHALL BE GALVANIZED.

WELDING ELECTRODES SHALL MEET REQUIREMENTS OF AWS A5.1, E70XX SERIES. THE MINIMUM SIZE OF ALL FILLET WELDS SHALL BE AS SHOWN ON TABLE J2.4 OF AISC SPECIFICATIONS UNLESS OTHERWISE NOTED.

PROJECT NO.	YEAR	SHEET NO.
STP-126(19)	2014	72

REVISIONS

NO.	DATE	BY	BRIEF DESCRIPTION

UNOFFICIAL SET

NOT FOR BIDDING

STATE OF TENNESSEE
DEPARTMENT OF TRANSPORTATION

STEVEN R. ALVIS REGISTERED ENGINEER AGRICULTURE COMMERCE No. 117318 STATE OF TENNESSEE
6/12/14

GENERAL NOTES
PEDESTRIAN BRIDGE
OVER WILCOX DRIVE
BR. I.D. NO. 82SR1260017
STATION 127+89.96
CITY OF KINGSPORT
SULLIVAN COUNTY
2014

U-64-138

DESIGNED BY	S. ALVIS	DATE	05/2014
DRAWN BY	D. ALLEN	DATE	05/2014
SUPERVISED BY	C. THOMAS	DATE	05/2014
CHECKED BY	S. CAMPBELL	DATE	05/2014

6/19/2014 9:53:51 AM
V:\3136\Pedestrian Bridge\Drawings\Construction\GeneralNotes.dgn

GENERAL NOTES - CONTINUED

STUD SHEAR CONNECTORS AND CONCRETE ANCHORS SHALL BE AUTOMATICALLY END WELDED, HEADED STUDS OF STANDARD MANUFACTURE CONFORMING TO AWS D1.1. WELDED FLAT BARS OF EQUAL YIELD LOAD VALUES MAY BE SUBSTITUTED FOR WELDED STUDS WHERE USED AS CONCRETE ANCHORS IN CURB AND EDGE ANGLES ONLY.

ALL EXPOSED STEEL SHALL BE TYPE 304 STAINLESS STEEL, OR GALVANIZED PER ASTM A525, G90 AS INDICATED, UNLESS OTHERWISE NOTED.

UNLESS OTHERWISE NOTED, LEVELING PLATES SHALL BE 1/4-INCH THICK AND SHALL MATCH THE PLAN DIMENSIONS OF THE BASE PLATE.

STEEL ROOF DECK SHALL BE DESIGNED FOR A DEAD LOAD OF 13 PSF AND THE INDICATED LIVE LOADS INCLUDING UPLIFT. THE FULL SNOW LOAD UP TO THE TOP OF THE PARAPET SHALL BE ACCOUNTED FOR IN THE LIVE LOAD. THE MINIMUM DECK SIZE SHALL BE AS SHOWN ON PLANS. WELDING PATTERN SHALL RESIST AT LEAST 150 POUNDS PER FOOT OF SHEAR IN DIAPHRAGM ACTION.

COMPOSITE STEEL FLOOR DECK SHALL BE DESIGNED FOR A SUPERIMPOSED DEAD LOAD OF 40 PSF AND THE INDICATED LIVE LOAD A LIVE LOAD OF 90 PSF. THE MINMUM DECK SIZE SHALL BE AS SHOWN ON PLANS.

CONCRETE:

ALL REINFORCING SHALL BE DETAILED, FABRICATED, AND PLACED IN ACCORDANCE WITH ACI 315 (LATEST EDITION) UNLESS OTHERWISE NOTED. ALL SPLICES SHALL BE CLASS B TENSION WITH ALL APPLICABLE MODIFICATION FACTORS, UNLESS OTHERWISE NOTED. SPLICES NOT INDICATED MAY BE PROVIDED IF PROPERLY DETAILED ON SHOP DRAWINGS AND APPROVED BY THE ENGINEER. SPLICES OF HORIZONTAL BARS SHALL BE STAGGERED UNLESS OTHERWISE NOTED. EMBEDMENT LENGTHS SHALL BE EQUAL TO TENSION DEVELOPMENT LENGTHS UNLESS OTHERWISE NOTED. STANDARD HOOKS CONFORMING TO ACI 318 SHALL BE USED UNLESS OTHERWISE NOTED. DOWELS IN WALL AND COLUMNS SHALL MATCH SIZE AND SPACING OF MAIN REINFORCING BARS UNLESS OTHERWISE NOTED. ALL COLUMN TIES AND BEAM STIRRUPS SHALL BE CLOSED TYPE (ACI TYPE T1) UNLESS OTHERWISE NOTED. SPREAD REINFORCING AT OPENINGS AND SLEEVES UNLESS OTHERWISE DETAILED. DO NOT CUT REINFORCING BARS. CONCRETE PROTECTION FOR REINFORCEMENT SHALL CONFORM TO ACI 301 (LATEST EDITION) AND SHALL BE INDICATED ON THE SHOP DRAWINGS. ALL SPLICE LENGTHS AND EMBEDMENT LENGTHS, BENDING DIAGRAMS, AND ASSEMBLY DIAGRAMS SHALL BE INDICATED ON THE SHOP DRAWINGS. PROVIDE 2-#5 CONTINUOUS AT THE TOP OF ALL WALLS. THE CONTRACTOR SHALL KEEP A COPY OF ACI 301 (LATEST EDITION) AND PUBLICATION SP-15 AT THE JOBSITE.

MAJOR CONSTRUCTION JOINTS ARE SHOWN. INTERMEDIATE JOINTS IN WALLS, SLABS, COLUMNS, AND FLOOR FRAMING ARE NOT SHOWN UNLESS REQUIRED BY THE DESIGN. ALL CONSTRUCTION AND CONTROL JOINTS SHALL BE SHOWN ON THE SHOP DRAWINGS. CONSTRUCTION JOINTS MAY BE OMITTED OR RELOCATED IF PROPERLY DETAILED ON THE SHOP DRAWINGS AND APPROVED BY THE ENGINEER. (JOINT LOCATIONS MUST BE APPROVED BY THE ENGINEER BEFORE SUBMITTING REINFORCING STEEL SHOP DRAWINGS.) MAXIMUM SPACING OF CONTROL JOINTS FOR SLAB ON GRADE SHALL BE 15 FEET.

THE UNIT OF OPERATION OF CONCRETE PLACEMENT SHALL NOT EXCEED 70 FEET IN ANY DIRECTION. AT LEAST 72 HOURS SHALL ELAPSE BEFORE CONCRETE IS PLACED ADJACENT TO PREVIOUSLY CAST CONCRETE.

CHAMFER ALL EXPOSED EDGES OF CONCRETE 1 INCH.

CONCRETE SHALL BE PLACED IN LAYERS NOT OVER 18 INCHES DEEP AND EACH LAYER SHALL BE COMPACTED BY MECHANICAL INTERNAL-VIBRATING EQUIPMENT SUPPLEMENTED BY HAND SPADING, RODDING AND TAMPING. VIBRATORS SHALL NOT BE INSERTED INTO LOWER COURSES THAT HAVE BEGUN TO SET. CONCRETE SHALL BE PLACED BY CHUTES OR ELEPHANT TRUNKS WHEN THE VERTICAL DROP EXCEEDS 4'-0". (FOR CONCRETE PLACEMENT IN CAISSONS/DRILLED SHAFTS, SEE SPECIAL PROVISION 625.)

CONTRACTOR SHALL NOTIFY ENGINEER 48 HOURS PRIOR TO PLACING ANY CONCRETE SO THAT REINFORCEMENT, SLEEVES, PIPES, INSERTS, HANGERS, ETC., CAN BE INSPECTED FOR CONFORMANCE WITH PLANS AND SPECIFICATIONS.

EXPANSION ANCHORS SHALL BE TRUBOLT BY RAMSET FASTENING SYSTEMS, RED HEAD BY ITT PHILLIPS DRILL DIVISION, KWIK-BOLT BY HILTI FASTENING SYSTEMS, OR APPROVED EQUAL, AND SHALL BE GALVANIZED. MINIMUM WORKING (SERVICE) LOADS SHALL BE AS FOLLOWS FOR 4000 PSI CONCRETE:

DIAMETER (INCHES)	SHEAR (LBS)	TENSION (LBS)
1/2	1700	1375
5/8	2650	1650
3/4	3830	2535
7/8	4915	3315
1	6720	4000
1-1/4	8020	5750

EPOXY ANCHORS OF EQUAL SIZE AND MATERIAL MAY BE SUBSTITUTED FOR EXPANSION ANCHORS PROVIDED MINIMUM WORKING (SERVICE) LOADS ARE EQUAL TO OR GREATER THAN THOSE FOR EXPANSION ANCHORS. EPOXY ANCHORS SHALL BE GALVANIZED AND SHALL BE HILTI HVA ADHESIVE ANCHORS TYPE H.A.S. STD., MOLLY PARABOND BY EMHART, RAWL CHEM-STUDS, OR APPROVED EQUAL.

THIS PROJECT IS TO BE CONSTRUCTED IN ACCORDANCE WITH THE TENNESSEE DEPARTMENT OF TRANSPORTATION ROAD AND BRIDGE STANDARDS DATED APRIL 1, 1997, STANDARD SPECIFICATIONS FOR ROAD AND BRIDGE CONSTRUCTION DATED MARCH 1, 2006, AND AS AMENDED BY CONTRACT PROVISIONS AND THE COMPLETE PAPER COPY OF THE PLAN ASSEMBLY.

BENCHMARK:_____
ELEVATION:_____

ALL NORTH ARROWS SHOWN ON PLANS REPRESENT TRUE NORTH.

PEDESTRIAN BRIDGE NOTES

PEDESTRIAN BRIDGE DESIGN SPECIFICATIONS:

AASHTO LRFD GUIDE SPECIFICATIONS FOR THE DESIGN OF PEDESTRIAN BRIDGES, DECEMBER 2009
AASHTO 2010 6TH EDITION BRIDGE DESIGN SPECIFICATIONS WITH ADDENDA.
(SEISMIC ZONE I, Sds = 0.258g, Sd1=0.103g)
AASHTO STANDARD SPECIFICATIONS FOR STRUCTURAL SUPPORTS FOR HIGHWAY SIGNS, LUMINAIRES, AND TRAFFIC SIGNALS, SIXTH EDITION, 2013
ASCE 7-02 MINIMUM DESIGN LOADS FOR BUILDINGS AND OTHER STRUCTURES

PEDESTRIAN BRIDGE SPECIFIC LOADINGS:

PEDESTRIAN LOAD	90 PSF
WIND LOADING (BASED ON AASHTO PEDESTRIAN CODE):	
HORIZONTAL	40.2 PSF
UPLIFT APPLIED AS LINE ALONG LENGTH	20 PSF @ QUARTER POINT OF DECK WIDTH

BUILDING NOTES

BUILDING DESIGN SPECIFICATIONS:

ASCE 7-02 MINIMUM DESIGN LOADS FOR BUILDINGS AND OTHER STRUCTURES
ICC INTERNATIONAL BUILDING CODE 2006
(SEISMIC ZONE A, Sds = 0.247g, Sd1 = 0.091g)
ACI 318 (2011) "BUILDING CODE REQUIREMENTS FOR REINFORCED CONCRETE."
ACI 530 (2011)/ASCE 5 "BUILDING CODE REQUIREMENTS FOR MASONRY STRUCTURES."
AISC "SPECIFICATION FOR STRUCTURAL STEEL BUILDINGS" 14TH EDITION

SEISMIC DESIGN DATA FOR BUILDINGS BASED ON SITE SPECIFIC SEISMIC HAZARD ANALYSIS FOR EASTMAN CHEMICAL SITE PREPARED BY URS CORPORATION DATED OCTOBER 2, 2007. JOB NO. 33760229.

BUILDING SPECIFIC LOADING:

WIND LOADS: BASED ON IBC (2006)

BASIC WIND SPEED, V	90 MPH
EXPOSURE CATEGORY	B
IMPORTANCE FACTOR, I	1.0
NET UPLIFT ON ROOF	17 PSF

TYPE OF CONSTRUCTION:TYPE IIB (UNPROTECTED), FULLY SPRINKLERED.

MASONRY:

PROVIDE GALVANIZED HORIZONTAL TRUSS TYPE JOINT REINFORCING WITH 3/16 INCH SIDE RODS AND NO. 9 GAGE CROSS RODS AT 16" O/C UNLESS OTHERWISE NOTED.

THE CONTRACTOR SHALL KEEP A COPY OF ACI 530.1/ASCE 6 (LATEST EDITION) AT THE JOBSITE.

REINFORCED MASONRY. ALL REINFORCED CELLS SHALL BE FULLY GROUTED FROM TOP TO BOTTOM OF WALL. ALL CELLS CONTAINING ANCHOR BOLTS SHALL BE FULLY GROUTED. THE MASONRY CONTRACTOR SHALL BUILD, REINFORCE, AND GROUT THE WALLS IN 4'-0" LIFTS, VIBRATING GROUT IMMEDIATELY AFTER EACH LIFT. THE REINFORCING STEEL FABRICATOR SHALL PROVIDE REBARS FOR 4'-0" HIGH VERTICAL LIFTS PLUS A BAR LAP OF 36 X BAR DIAMETER. UNLESS OTHERWISE NOTED OR DETAILED, CENTER REINFORCING IN BLOCK CELLS AND TIE IN PLACE AT INTERVALS OF 4'-0" O/C MAXIMUM. IN ADDITION TO REINFORCING SHOWN, PROVIDE ONE #5 VERTICAL BAR EACH SIDE OF ALL OPENINGS, AND AT CORNERS AND INTERSECTIONS UNLESS OTHERWISE NOTED. PROVIDE REBAR DOWELS OF SAME SIZE AND SPACING AS VERTICAL REINFORCING FROM WALL FOOTINGS. DOWELS SHALL HAVE STANDARD ACI HOOKS AND SHALL LAP 36 X BAR DIAMETER WITH FIRST LIFT OF VERTICAL REINFORCING.

PROJECT NO.	YEAR	SHEET NO.
STP-126(19)	2014	73

REVISIONS

NO.	DATE	BY	BRIEF DESCRIPTION

UNOFFICIAL SET
NOT FOR BIDDING

STEVEN R. ALVIS REGISTERED ENGINEER No. 117318 STATE OF TENNESSEE AGRICULTURE COMMERCE 5/28/14

STATE OF TENNESSEE
DEPARTMENT OF TRANSPORTATION

GENERAL NOTES
PEDESTRIAN BRIDGE
OVER WILCOX DRIVE
BR. I.D. NO. 82SR1260017
STATION 127+89.96
CITY OF KINGSPORT
SULLIVAN COUNTY
2014

U-64-139

DESIGNED BY	S. ALVIS	DATE	05/2014
DRAWN BY	D. ALLEN	DATE	05/2014
SUPERVISED BY	C. THOMAS	DATE	05/2014
CHECKED BY	S. CAMPBELL	DATE	05/2014

6/19/2014 9:54:22 AM
V:\3IG\Pedestrian Bridge\Drawings\Construction\GeneralNotes.dgn

PROJECT NO.	YEAR	SHEET NO.
STP-126(19)	2014	74

REVISIONS

NO.	DATE	BY	BRIEF DESCRIPTION

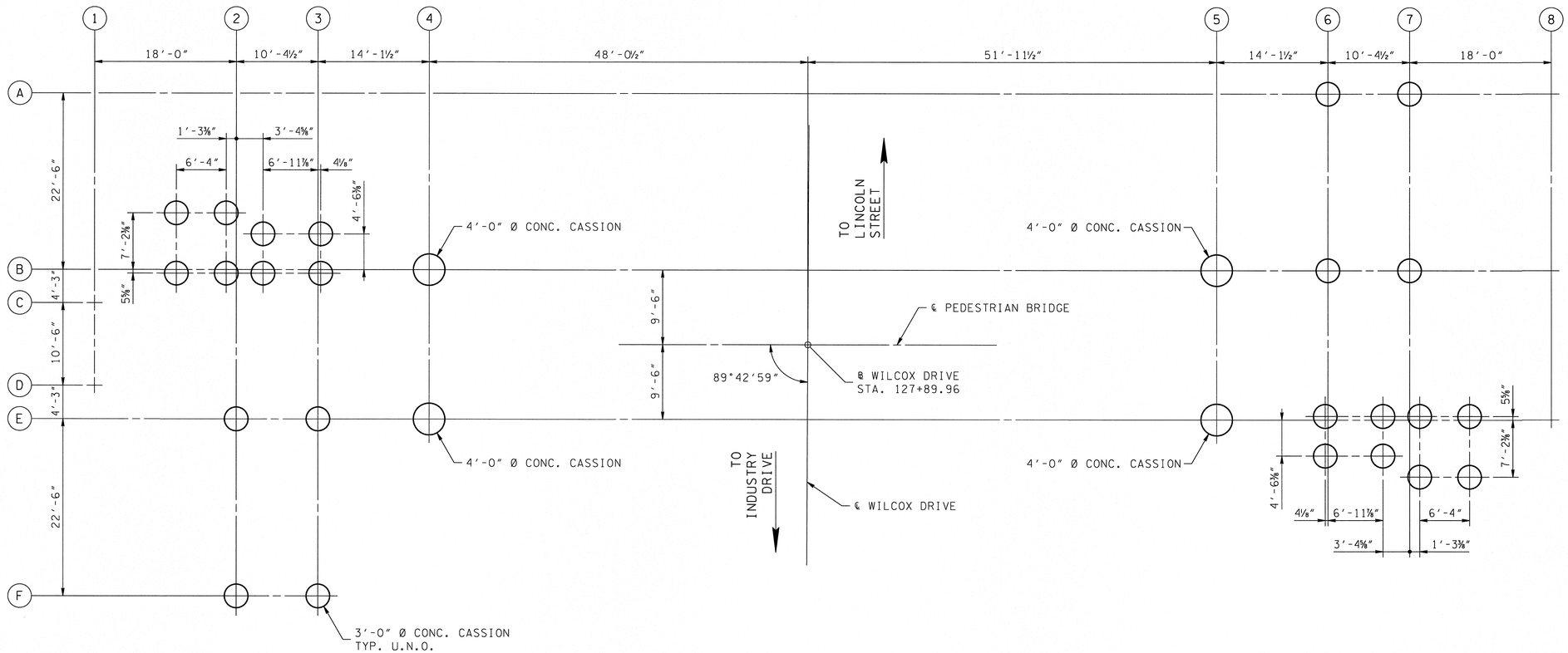

FOUNDATION LAYOUT

SCALE: ⅛" = 1'-0"

UNOFFICIAL SET

NOT FOR BIDDING

STATE OF TENNESSEE
DEPARTMENT OF TRANSPORTATION

FOUNDATION LAYOUT
PEDESTRIAN BRIDGE
OVER WILCOX DRIVE
BR. I.D. NO. 82SR1260017
STATION 127+89.96
CITY OF KINGSPORT
SULLIVAN COUNTY
2014

STEVEN R. ALVIS
REGISTERED ENGINEER
AGRICULTURE
COMMERCE
No. 117318
STATE OF TENNESSEE
6/13/14

DESIGNED BY	S. ALVIS	DATE	05/2014
DRAWN BY	D. ALLEN	DATE	05/2014
SUPERVISED BY	C. THOMAS	DATE	05/2014
CHECKED BY	S. CAMPBELL	DATE	05/2014

6/19/2014 9:53:04 AM
V:\3131G\Pedestrian Bridge\Drawings\Construction\Foundation.dgn

U-64-140

PROJECT NO.	YEAR	SHEET NO.
STP-126(19)	2014	75

REVISIONS

NO.	DATE	BY	BRIEF DESCRIPTION

NOTES:

1. PIERS ARE DESIGNATED 4 AND 5 IN RESPECT TO THEIR CORRESPONDING COLUMN LINE.
2. FOR REINFORCING STEEL SCHEDULE, SEE DWG. NO. U-64-137.
3. THE SUBSURFACE INVESTIGATION INDICATES A 2'-0" DEEP LAYER OF FRACTURED BEDROCK ABOVE COMPETENT BEDROCK. CONTRACTOR SHALL SOCKET PIER A MINIMUM OF 8'-0" IN TO COMPETENT BEDROCK AS DETERMINED BY A GEOTECHNICAL ENGINEER IN THE FIELD. SEE DWG. NO. U-64-150 FOR ENGINEERING GEOLOGY.
4. WHEN POURING THE CONCRETE BEAM, PROVISIONS SHALL BE MADE FOR SETTING ANCHOR BOLTS AND PROVIDING ADEQUATE BOLT PROJECTION.
5. SEE STANDARD DRAWING STD-6-2 FOR SPIRAL REINFORCEMENT DETAILS AND NOTES.

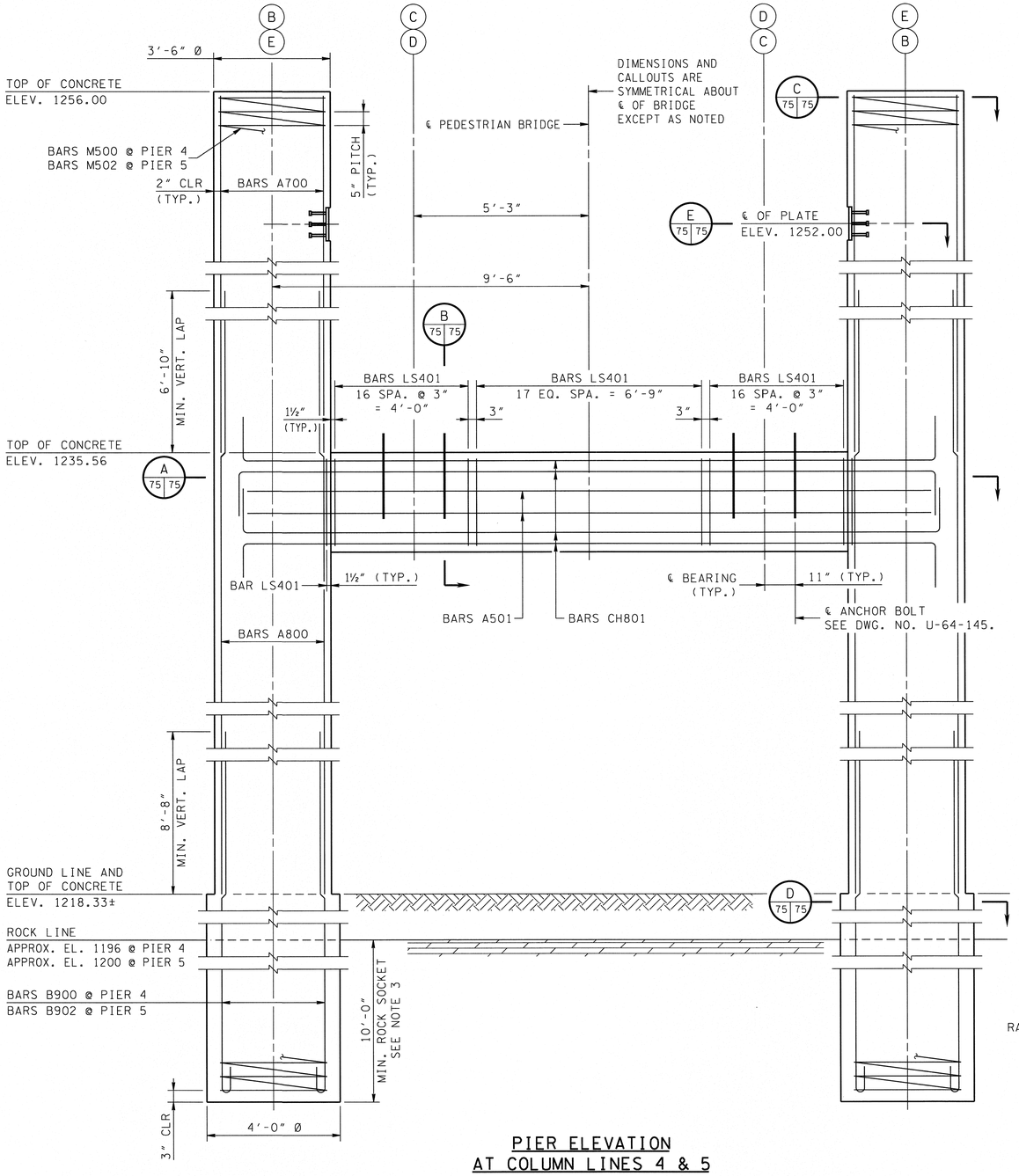

PIER ELEVATION
AT COLUMN LINES 4 & 5
SCALE: ½" = 1'-0"

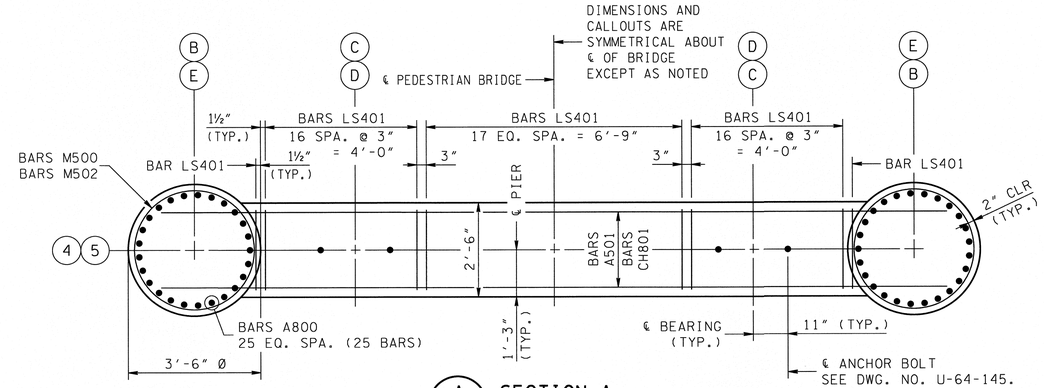

A 75 75 SECTION A
SCALE: ½" = 1'-0"

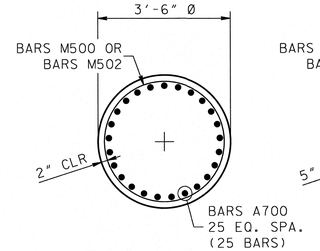

C 75 75 SECTION C
SCALE: ½" = 1'-0"

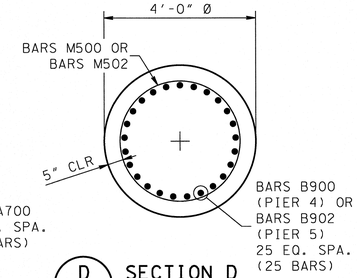

D 75 75 SECTION D
SCALE: ½" = 1'-0"

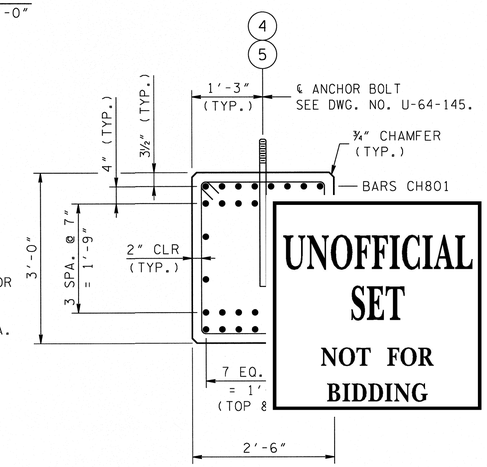

B 75 75 SECTION B
SCALE: ¾" = 1'-0"

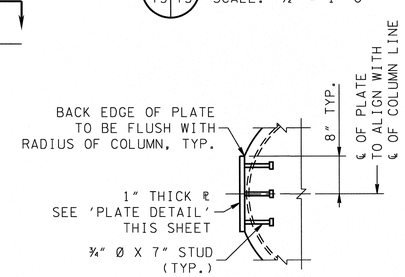

E 75 75 SECTION E
SCALE: ¾" = 1'-0"

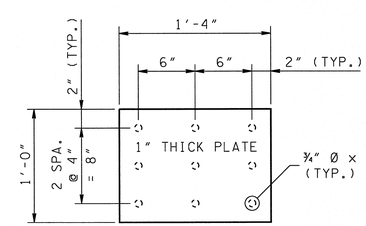

PLATE DETAIL
SCALE: 1½" = 1'-0"

UNOFFICIAL SET
NOT FOR BIDDING

STATE OF TENNESSEE
DEPARTMENT OF TRANSPORTATION

PIERS - DETAILS
PEDESTRIAN BRIDGE
OVER WILCOX DRIVE
BR. I.D. NO. 82SR1260017
STATION 127+89.96
CITY OF KINGSPORT
SULLIVAN COUNTY
2014

STEVEN R. ALVIS
REGISTERED ENGINEER
DEPARTMENT OF AGRICULTURE
DEPARTMENT OF COMMERCE
No. 117318
STATE OF TENNESSEE
6/20/14

DESIGNED BY	S. ALVIS	DATE	05/2014
DRAWN BY	D. ALLEN	DATE	05/2014
SUPERVISED BY	C. THOMAS	DATE	05/2014
CHECKED BY	S. CAMPBELL	DATE	05/2014

6/19/2014 9:55:37 AM
V:\313\G\Pedestrian Bridge\Drawings\Construction\Piers.dgn

SEQUENCE OF CONSTRUCTION:

1. CONSTRUCT PIERS 4 AND 5.
2. ASSEMBLE COMPLETE TRUSS WITH WIND BRACING.
3. TIGHTEN DIAGONAL RODS USING TURNBUCKLES TO 31 KIPS TENSION IN THE MAIN SPAN AND 21 KIPS TENSION IN THE CANTILEVERED SPANS.
4. PLACE TRUSS.
5. TIGHTEN DIAGONAL RODS USING TURNBUCKLES TO 43 KIPS TENSION IN THE MAIN SPAN AND 26 KIPS TENSION IN THE CANTILEVERED SPANS.
6. PLACE DECK AND CONCRETE FLOOR SLAB.
7. PERFORM REMAINING WORK.
8. TIGHTEN ANCHOR BOLT NUTS AT PIERS AFTER ALL DEAD LOAD COMPONENTS ARE IN PLACE.

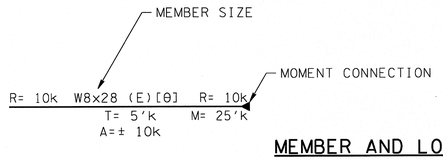

MEMBER AND LOAD KEY

NOT TO SCALE

T = FACTORED END TORSIONAL REACTION EACH END
A = FACTORED AXIAL END REACTION EACH END: (+) COMPRESSION, (-) TENSION
R = FACTORED END SHEAR REACTION
M = FACTORED MOMENT END REACTION
[θ] = MEMBER LOCAL AXIS ROTATION
(E) = VERTICAL ELEVATION OFFSET FOR T/S: (+) UP, (-) DOWN, (0" IF NOT SHOWN)
(E*) = VERTICAL ELEVATION OFFSET FOR MEMBER ℄: (+) UP, (-) DOWN, (N/A OF NOT SHOWN)
T/S = TOP OF STEEL

PROJECT NO.	YEAR	SHEET NO.
STP-126(19)	2014	76

REVISIONS

NO.	DATE	BY	BRIEF DESCRIPTION

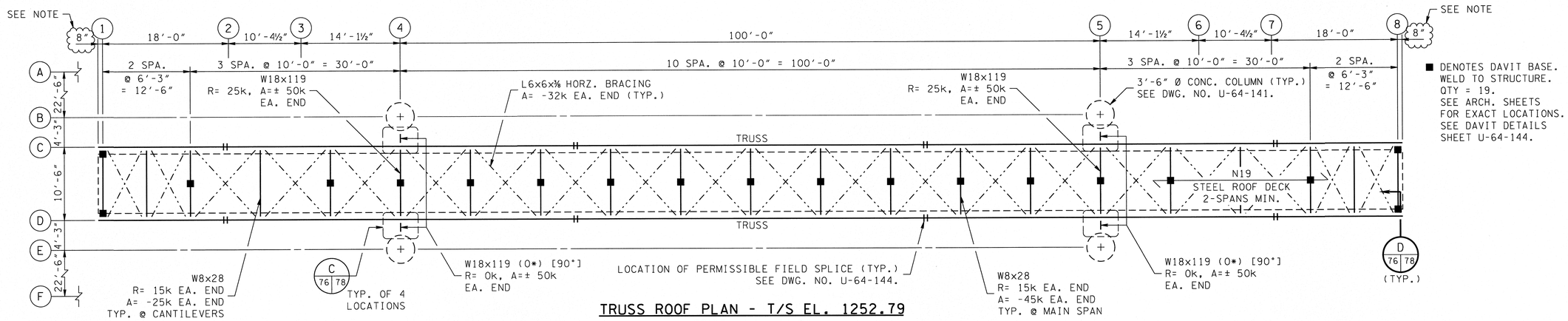

■ DENOTES DAVIT BASE. WELD TO STRUCTURE. QTY = 19. SEE ARCH. SHEETS FOR EXACT LOCATIONS. SEE DAVIT DETAILS SHEET U-64-144.

TRUSS ROOF PLAN - T/S EL. 1252.79

SCALE: ⅛" = 1'-0"

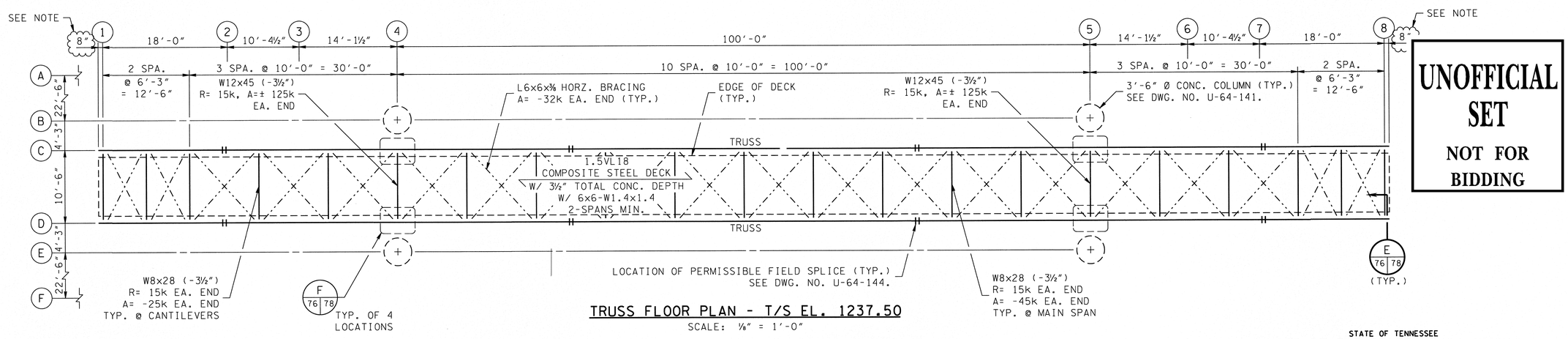

TRUSS FLOOR PLAN - T/S EL. 1237.50

SCALE: ⅛" = 1'-0"

UNOFFICIAL SET

NOT FOR BIDDING

NOTE:
CONTRACTOR/FABRICATOR TO COORDINATE DIMENSION WITH CURTAIN WALL MANUFACTURER.

STATE OF TENNESSEE
DEPARTMENT OF TRANSPORTATION

TRUSS FRAMING PLANS
PEDESTRIAN BRIDGE
OVER WILCOX DRIVE
BR. I.D. NO. 82SR1260017
STATION 127+89.96
CITY OF KINGSPORT
SULLIVAN COUNTY
2014

STEVEN R. ALVIS REGISTERED ENGINEER AGRICULTURE COMMERCE No. 117318 STATE OF TENNESSEE 6/19/14

DESIGNED BY	S. ALVIS	DATE	05/2014
DRAWN BY	D. ALLEN	DATE	05/2014
SUPERVISED BY	C. THOMAS	DATE	05/2014
CHECKED BY	S. CAMPBELL	DATE	05/2014

6/19/2014 10:09:45 AM
V:\3\3\G\Pedestrian Bridge\Drawings\Construction\Truss Plan.dgn

PROJECT NO.	YEAR	SHEET NO.
STP-126(19)	2014	77

REVISIONS

NO.	DATE	BY	BRIEF DESCRIPTION

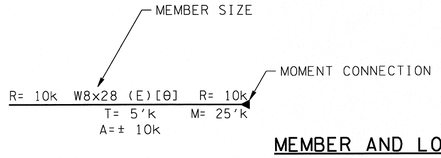

MEMBER AND LOAD KEY

NOT TO SCALE

T = FACTORED END TORSIONAL REACTION EACH END
A = FACTORED AXIAL END REACTION EACH END: (+) COMPRESSION, (-) TENSION
R = FACTORED END SHEAR REACTION
M = FACTORED MOMENT END REACTION
[θ] = MEMBER LOCAL AXIS ROTATION
(E) = VERTICAL ELEVATION OFFSET FOR T/S: (+) UP, (-) DOWN, (0" IF NOT SHOWN)
(E*) = VERTICAL ELEVATION OFFSET FOR MEMBER ℄: (+) UP, (-) DOWN, (N/A OF NOT SHOWN)
T/S = TOP OF STEEL
T/C = TOP OF CONCRETE

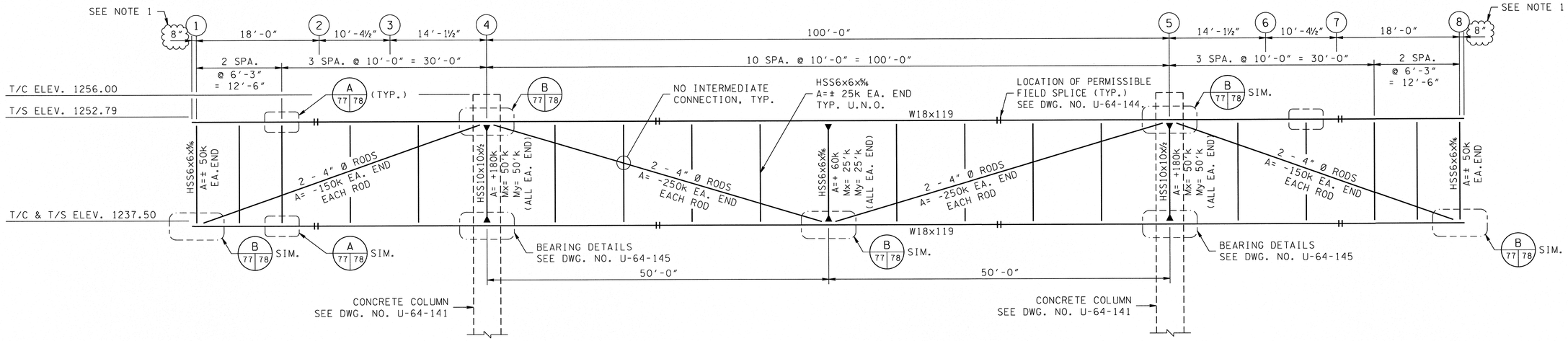

TYP. TRUSS ELEVATION

SCALE: ⅛" = 1'-0"

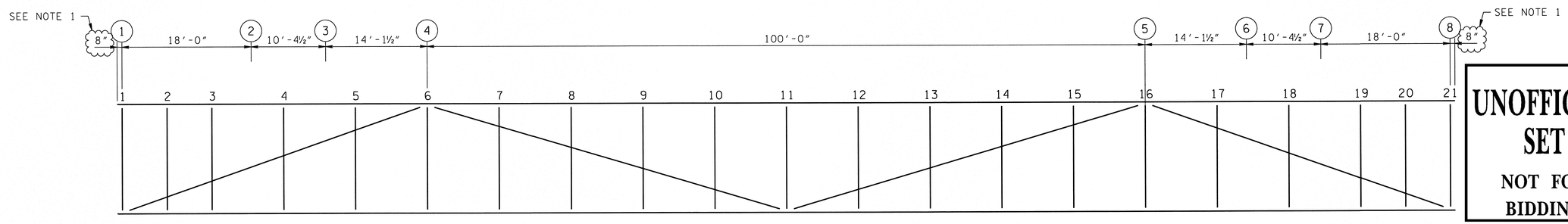

NODE	1	2	3	4	5	6	7	8	9	10	11	12	13	14	15	16	17	18	19	20	21
TOP CHORD	⅜	7/16	½	⅜	⅛	0	3/16	½	11/16	11/16	⅝	11/16	11/16	½	3/16	0	⅛	⅜	½	7/16	⅜
BOTTOM CHORD	⅜	7/16	½	⅜	⅛	0	3/16	½	11/16	11/16	⅝	11/16	11/16	½	3/16	0	⅛	⅜	½	7/16	⅜

ALL DIMENSIONS IN TABLE ARE IN INCHES AND REPRESENT TOTAL UPWARD CAMBER.

CAMBER DIAGRAM

NOT TO SCALE

UNOFFICIAL SET

NOT FOR BIDDING

NOTES:

1. CONTRACTOR/FABRICATOR TO COORDINATE DIMENSION WITH CURTAIN WALL MANUFACTURER.
2. PROVIDE ONE (1) TURNBUCKLE NEAR MID-LENGTH OF EACH 4" Ø ROD FOR TENSIONING OPERATIONS. TURNBUCKLE SHALL BE LOCATED SUCH THAT TRUSS VERTICALS DO NOT INTERFERE WITH TENSIONING OPERATIONS.
3. CLEVISES AND TURNBUCKLES SHALL BE CAPABLE OF CARRYING THE FACTORED TENSION LOAD(S) AS SHOWN ABOVE.

STEVEN R. ALVIS REGISTERED ENGINEER AGRICULTURE COMMERCE NO. 117318 STATE OF TENNESSEE 6/19/14

STATE OF TENNESSEE
DEPARTMENT OF TRANSPORTATION

TRUSS ELEVATION
PEDESTRIAN BRIDGE
OVER WILCOX DRIVE
BR. I.D. NO. 82SR1260017
STATION 127+89.96
CITY OF KINGSPORT
SULLIVAN COUNTY
2014

DESIGNED BY	S. ALVIS	DATE	05/2014
DRAWN BY	D. ALLEN	DATE	05/2014
SUPERVISED BY	C. THOMAS	DATE	05/2014
CHECKED BY	S. CAMPBELL	DATE	05/2014

U-64-143

6/19/2014 10:00:09 AM
V:\3130\Pedestrian Bridge\Drawings\Construction\Truss Elevation.dgn

PROJECT NO.	YEAR	SHEET NO.
STP-126(19)	2014	78

REVISIONS

NO.	DATE	BY	BRIEF DESCRIPTION

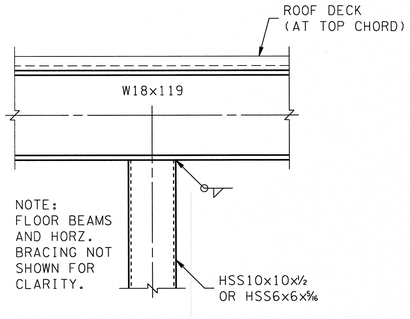

A 77 78 TYP. TRUSS VERT. CONN.
SCALE: ¾" = 1'-0"

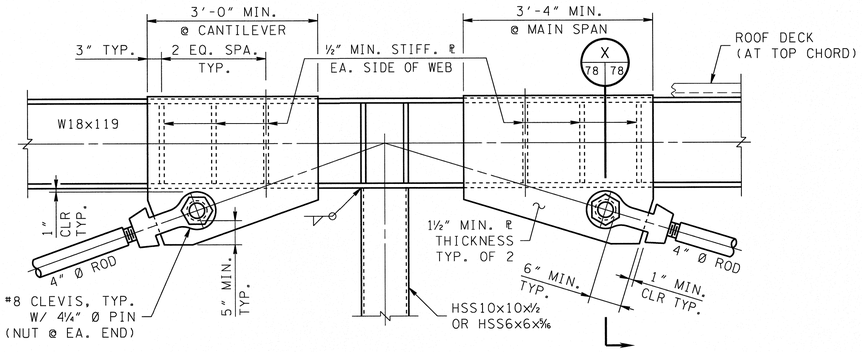

NOTES:

1. FLOOR BEAMS AND HORZ. BRACING NOT SHOWN FOR CLARITY.
2. CLEVISES SHALL BE CAPABLE OF CARRYING THE FACTORED TENSION LOAD(S) SHOWN ON DWG. NO. U-64-143.

B 77 78 TYP. ROD CONN. TO TRUSS
SCALE: ¾" = 1'-0"

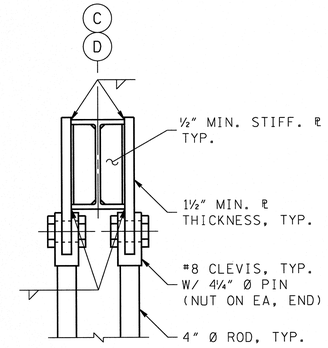

X 78 78 TYP. ROD CONN. SECTION
SCALE: ¾" = 1'-0"

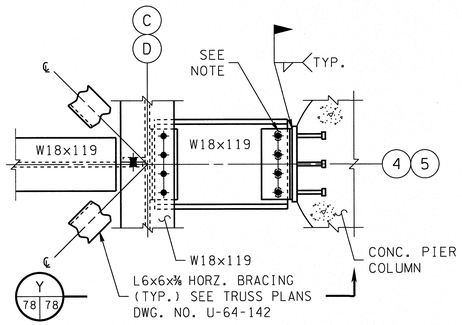

C 76 78 TYP. W18 TO W18 CONN. AT ROOF
SCALE: ¾" = 1'-0"

NOTE:
SLOTS IN W18x119 TO ALLOW FOR ± ⅝" DIFFERENTIAL DEFLECTION IN LONGITUDINAL DIRECTION OF TRUSSS.

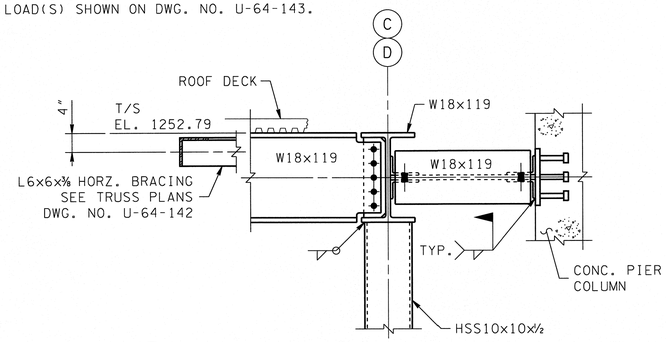

Y 78 78 TYP. W18 TO W18 CONN. ELEV. AT ROOF
SCALE: ¾" = 1'-0"

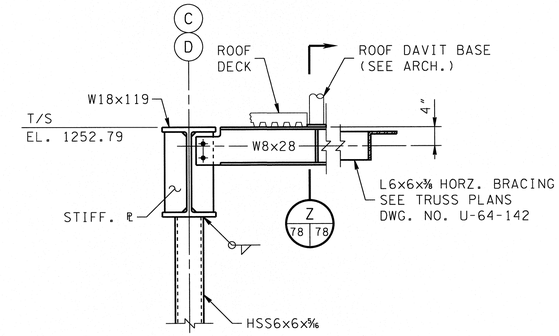

D 76 78 W8 TO W18 CONN. AT ROOF
SCALE: ¾" = 1'-0"

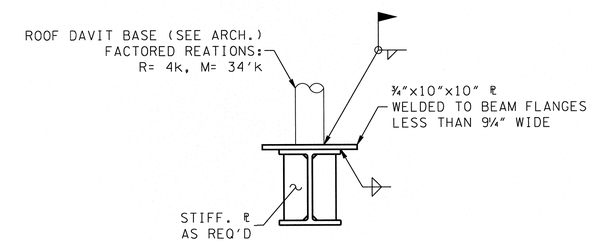

Z 78 78 TYP. CONN. AT ROOF DAVIT
SCALE: 1½" = 1'-0"

UNOFFICIAL SET
NOT FOR BIDDING

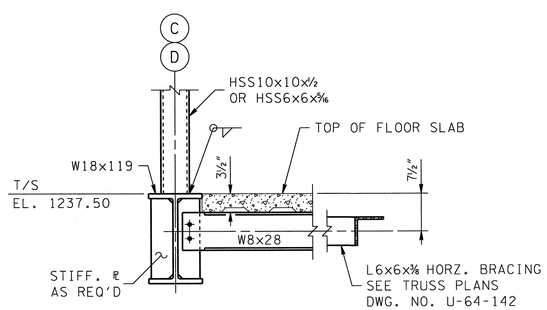

E 76 78 TYP. W8 TO W18 CONN. AT FLOOR
SCALE: ¾" = 1'-0"

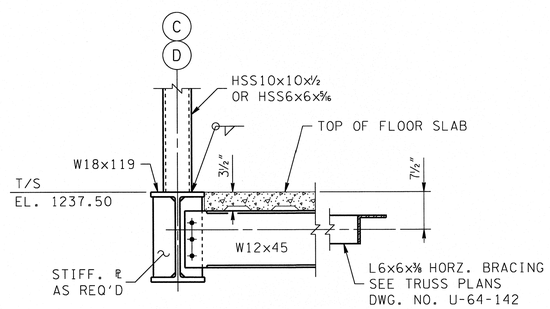

F 76 78 TYP. W12 TO W18 CONN. AT FLOOR
SCALE: ¾" = 1'-0"

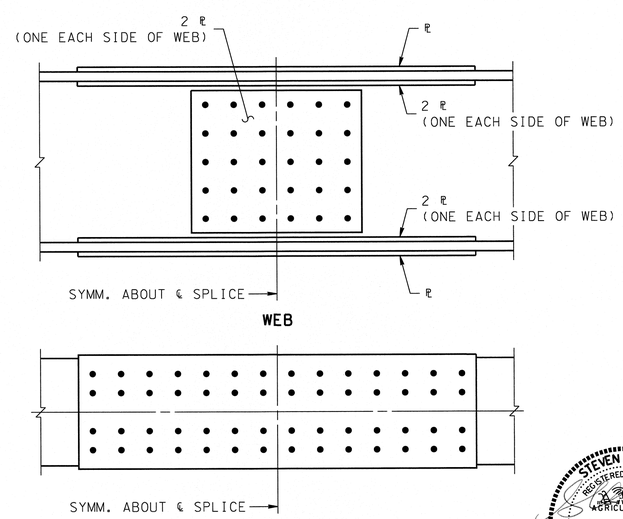

BOLTED SPLICE DETAILS
NOT TO SCALE

SPLICE NOTES:

1. ALL BOLTS SHALL BE ⅞" Ø HIGH TENSILE STRENGTH ASTM A325 (SLIP CRITICAL) BOLTS.
2. SPLICE SHALL CARRY FULL TENSILE AND SHEAR CAPACITY OF MEMBER.

STATE OF TENNESSEE
DEPARTMENT OF TRANSPORTATION

TRUSS DETAILS
PEDESTRIAN BRIDGE
OVER WILCOX DRIVE
BR. I.D. NO. 82SR1260017
STATION 127+89.96
CITY OF KINGSPORT
SULLIVAN COUNTY
2014

STEVEN R. ALVIS REGISTERED ENGINEER AGRICULTURE COMMERCE No. 117318 STATE OF TENNESSEE 6/20/14

DESIGNED BY	S. ALVIS	DATE	05/2014
DRAWN BY	D. ALLEN	DATE	05/2014
SUPERVISED BY	C. THOMAS	DATE	05/2014
CHECKED BY	S. CAMPBELL	DATE	05/2014

6/19/2014 9:59:34 AM
V:\3131G\Pedestrian Bridge\Drawings\Construction\Truss Details.dgn

U-64-144

PROJECT NO.	YEAR	SHEET NO.
STP-126(19)	2014	79

REVISIONS

NO.	DATE	BY	BRIEF DESCRIPTION

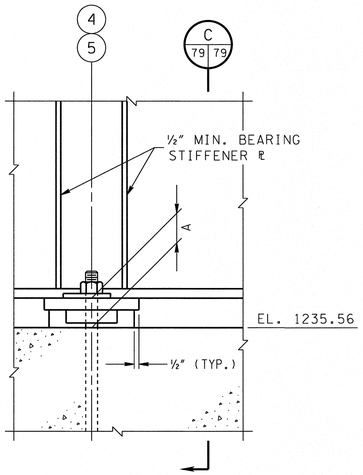

FIXED ASSEMBLY
NOT TO SCALE

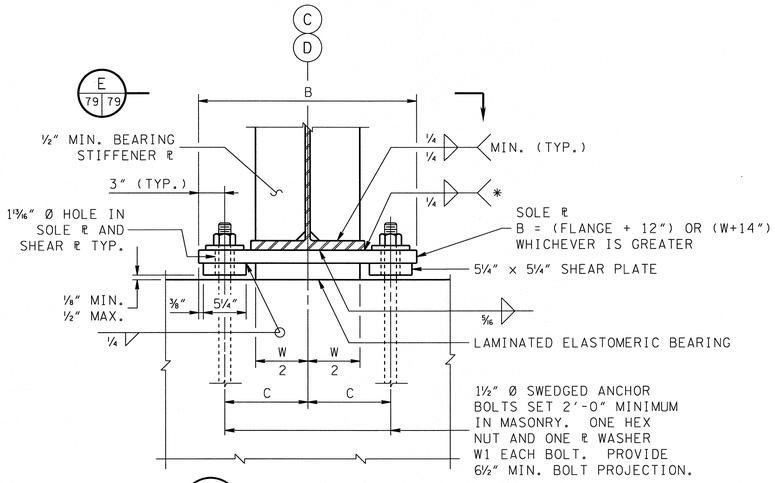

C 79 79 SECTION C
NOT TO SCALE

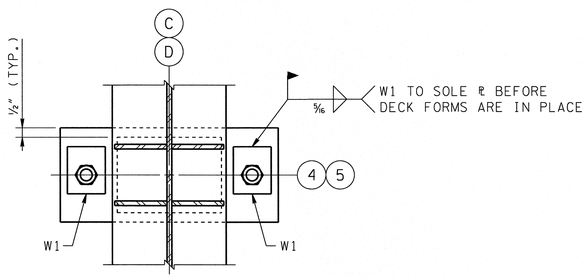

E 79 79 SECTION E
NOT TO SCALE

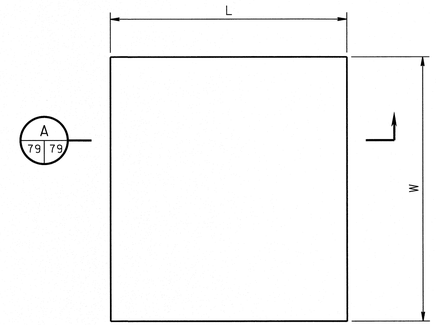

PLAN

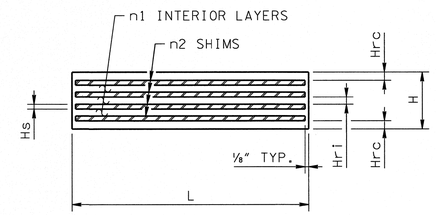

A 79 79 SECTION A
NOT TO SCALE

LAMINATED ELASTOMERIC BEARING
NOT TO SCALE

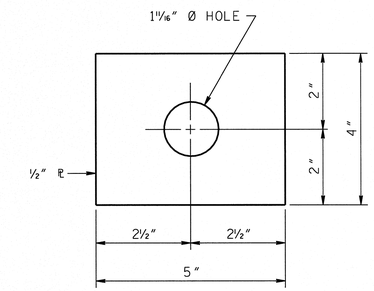

WASHER W1
NOT TO SCALE

A	B	C	LAMINATED ELASTOMERIC BEARING						GRADE (%)	TOTAL SERVICE LOAD (KIPS)
			W	L	H	Hrc	n1 @ Hri	n2 @ Hs		
4.25	28	11	14	14	3.5	0.25	5 @ 0.4565"	6 @ 0.1196"	0	185

ALL DIMENSIONS IN TABLE ARE IN INCHES.

NOTES:

MATERIAL: ELASTOMER - 50 DUROMETER HARDNESS.
SHIM - ASTM A36.

SOLE PLATES: BEVEL SOLE PLATES TO GRADE SHOWN. MINIMUM SOLE PLATE THICKNESS IS ¾ PLATES SHALL NOT BE PAINTED ON THE SURFACE IN CONTACT WITH THE ELASTOMERIC BEARING

ELASTOMERIC BEARINGS SHALL BE MOLDED AS A SINGLE UNIT. BEARING PLATES OR PADS SHA BEARING OVER THE ENTIRE AREA. PROVISION SHALL BE MADE TO KEEP PLATES OR PADS IN T DURING ERECTION OF BEAMS OR PLACEMENT OF CONCRETE. ELASTOMERIC PADS AND OTHER FLE MATERIALS SHALL BE PLACED DIRECTLY ON MASONRY SURFACES THAT HAVE BEEN FINISHED TO A ROUGHNESS EQUIVALENT OF A NO. 36 TO NO. 46 GRIT. PADS, BEARING AREAS, OR BRIDGE SEATS AND METAL BEARING PLATES SHALL BE THOROUGHLY CLEANED AND FREE FROM OIL, GREASE, AND OTHER FOREIGN MATERIALS. SOLE PLATES MUST BE VULCANIZED TO ELASTOMERIC BEARING PAD.

* WELD SHALL TERMINATE ¼" FROM EDGE OF SOLE PLATE.

UNOFFICIAL SET
NOT FOR BIDDING

STATE OF TENNESSEE
DEPARTMENT OF TRANSPORTATION

TRUSS BEARING DETAILS
PEDESTRIAN BRIDGE
OVER WILCOX DRIVE
BR. I.D. NO. 82SR1260017
STATION 127+89.96
CITY OF KINGSPORT
SULLIVAN COUNTY
2014

U-64-145

DESIGNED BY	S. ALVIS	DATE	05/2014
DRAWN BY	D. ALLEN	DATE	05/2014
SUPERVISED BY	C. THOMAS	DATE	05/2014
CHECKED BY	S. CAMPBELL	DATE	05/2014

6/19/2014 9:58:59 AM
V:\313\G\Pedestrian Bridge\Drawings\Construction\Truss Bearings.dgn

PROJECT NO.	YEAR	SHEET NO.
STP-126(19)	2014	80

REVISIONS

NO.	DATE	BY	BRIEF DESCRIPTION

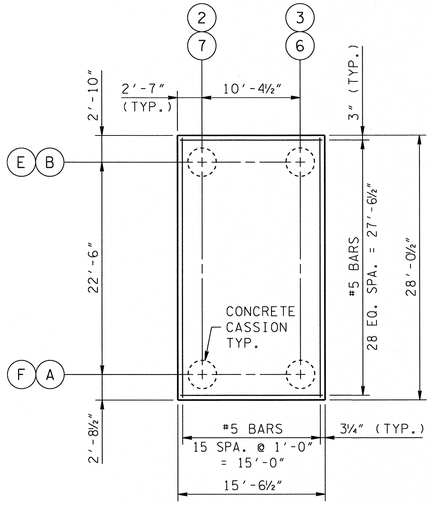

SLAB PLAN

SCALE: ⅛" = 1'-0"

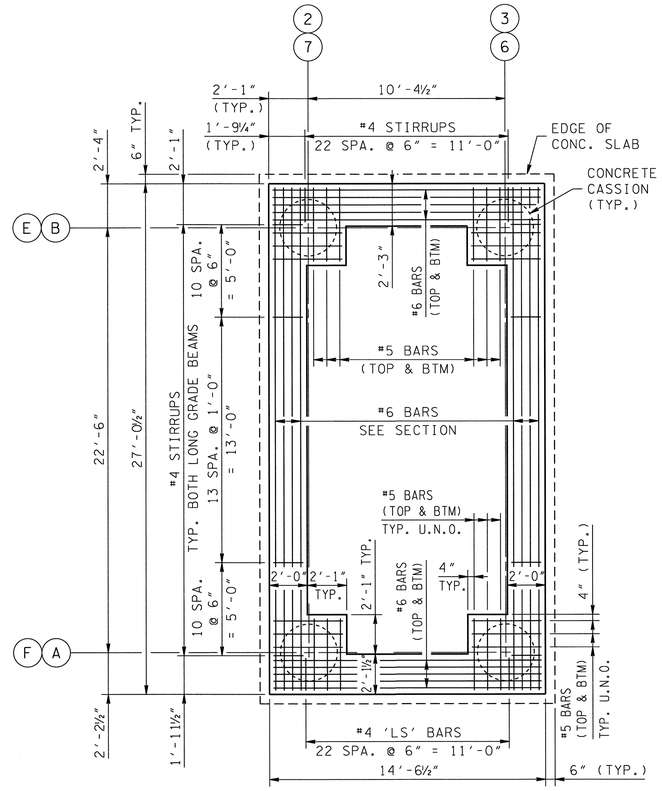

GRADE BEAM PLAN

SCALE: ¼" = 1'-0"

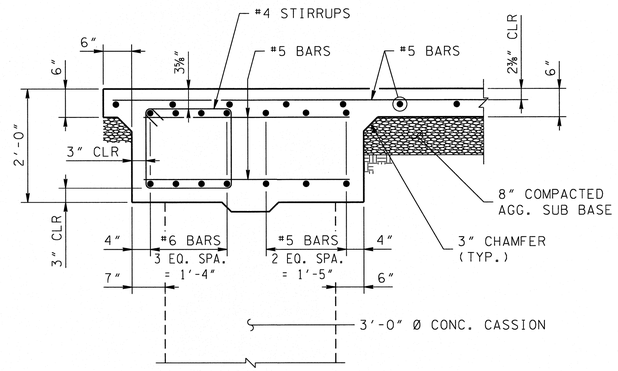

CASSION 'CAP' SECTION ALONG COLUMN LINES 2/3/6/7

SCALE: ¾" = 1'-0"

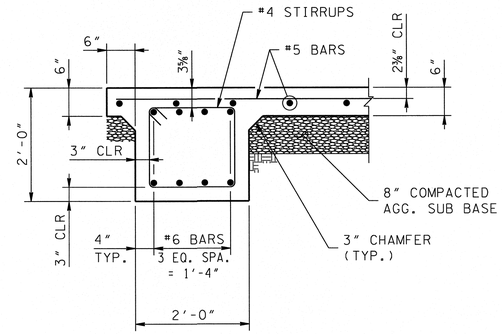

GRADE BEAM SECTION ALONG COLUMN LINES 2/3/6/7

SCALE: ¾" = 1'-0"

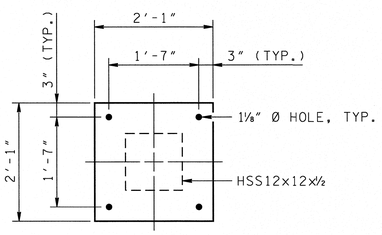

BASE PLATE DETAIL

SCALE: ¾" = 1'-0"

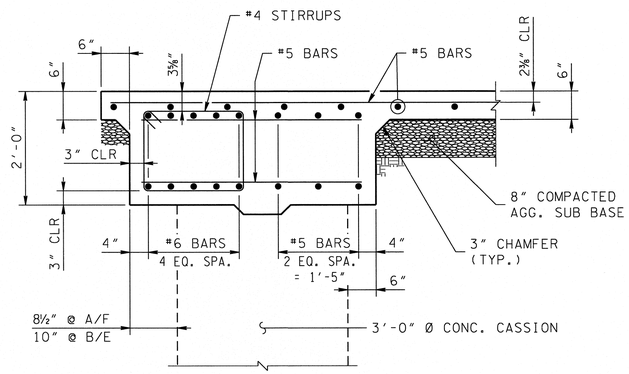

CASSION 'CAP' SECTION ALONG COLUMN LINES A/B/E/F

SCALE: ¾" = 1'-0"

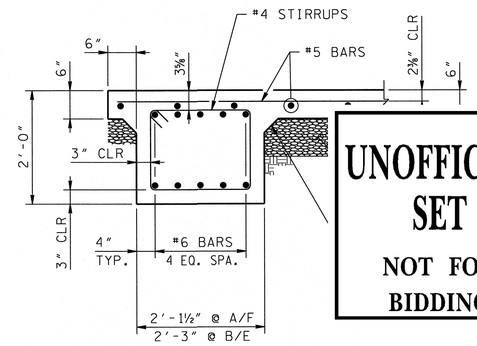

GRADE BEAM SECTION ALONG COLUMN LINES A/B/E/F

SCALE: ¾" = 1'-0"

UNOFFICIAL SET

NOT FOR BIDDING

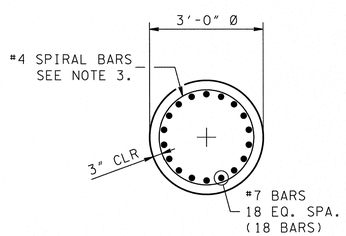

SECTION A

A 80|80 SCALE: ½" = 1'-0"

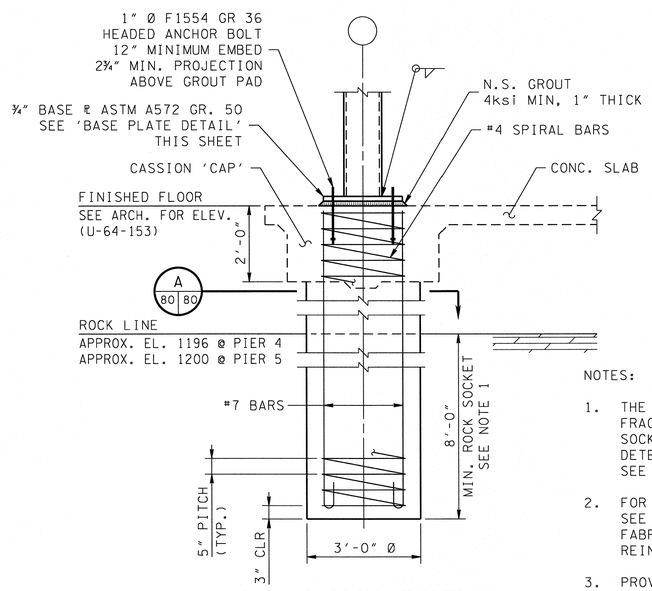

TYP. CASSION SECTION

SCALE: ½" = 1'-0"

NOTES:

1. THE SUBSURFACE INVESTIGATION INDICATES A 2'-0" DEEP LAYER OF FRACTURED BEDROCK ABOVE COMPETENT BEDROCK. CONTRACTOR SHALL SOCKET CASSION A MINIMUM OF 6'-0" IN TO COMPETENT BEDROCK AS DETERMINED BY A GEOTECHNICAL ENGINEEER IN THE FIELD. SEE DWG. NO. U-64-150 FOR ENGINEERING GEOLOGY.
2. FOR REINFORCING STEEL FABRICATION AND SUBMITTAL REQUIREMENTS, SEE GENERAL NOTES ON DWG. NOS. U-64-138 AND U-64-139. FABRICATOR SHALL DETAIL AND PROVIDE PLACEMENT DRAWINGS OF REINFORCING STEEL FOR STAIR TOWERS.
3. PROVIDE AT LEAST 1½ ADDITIONAL FINISHING TURN AT EACH END.
4. SEE STANDARD DRAWING STD-6-2 FOR SPIRAL REINFORCEMENT DETAILS AND NOTES.

STEVEN R. ALVIS REGISTERED ENGINEER AGRICULTURE COMMERCE NO. 117318 STATE OF TENNESSEE 6/20/14

STATE OF TENNESSEE
DEPARTMENT OF TRANSPORTATION

STAIR TOWER DETAILS
PEDESTRIAN BRIDGE
OVER WILCOX DRIVE
BR. I.D. NO. 82SR1260017
STATION 127+89.96
CITY OF KINGSPORT
SULLIVAN COUNTY
2014

DESIGNED BY	S. ALVIS	DATE	05/2014
DRAWN BY	D. ALLEN	DATE	05/2014
SUPERVISED BY	C. THOMAS	DATE	05/2014
CHECKED BY	S. CAMPBELL	DATE	05/2014

6/19/2014 9:56:57 AM
V:\313\G\Pedestrian Bridge\Drawings\Construction\Stair Tower.dgn

PROJECT NO.	YEAR	SHEET NO.
STP-126(19)	2014	81

REVISIONS

NO.	DATE	BY	BRIEF DESCRIPTION

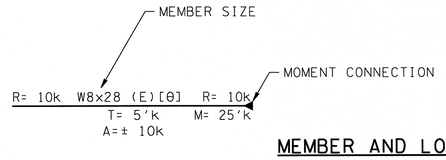

MEMBER AND LOAD KEY

NOT TO SCALE

T = FACTORED END TORSIONAL REACTION EACH END
A = FACTORED AXIAL END REACTION EACH END: (+) COMPRESSION, (-) TENSION
R = FACTORED END SHEAR REACTION
M = FACTORED MOMENT END REACTION
[θ] = MEMBER LOCAL AXIS ROTATION
(E) = VERTICAL ELEVATION OFFSET FOR T/S: (+) UP, (-) DOWN, (0" IF NOT SHOWN)
(E*) = VERTICAL ELEVATION OFFSET FOR MEMBER ℄: (+) UP, (-) DOWN, (N/A OF NOT SHOWN)
T/S = TOP OF STEEL

NOTE:
ALL MOMENT CONNECTION FOR HSS10x10x½ MEMBERS SHOWN IN ALL STAIR TOWER PLANS SHALL ALSO ACCOMMODATE 25'k FACTORED LATERAL BENDING MOMENT FROM LATERAL IN-PLANE WIND LOADING IN ADDITION TO MOMENTS SHOWN.

■ DENOTES DAVIT BASE. WELD TO STRUCTURE. QTY = 8. SEE ARCH. SHEETS FOR EXACT LOCATIONS. SEE SECTION B, THIS SHEET.

NOTE:
CONTRACTOR/FABRICATOR COORDINATE DIMENSION WITH STAIR SUPPLIER.

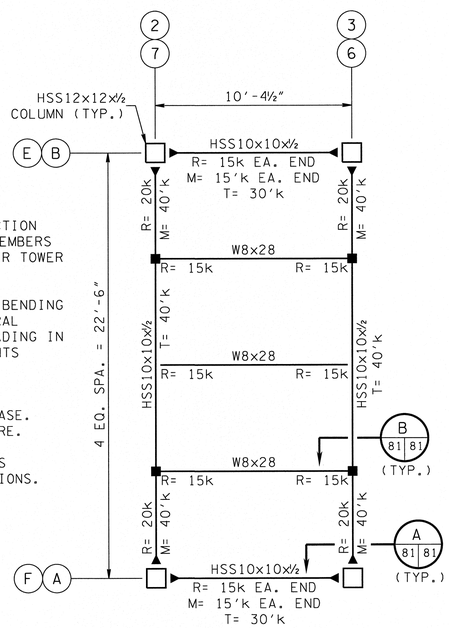

STAIR TOWER ROOF PLAN
T/S EL. 1252.37
SCALE: ¼" = 1'-0"

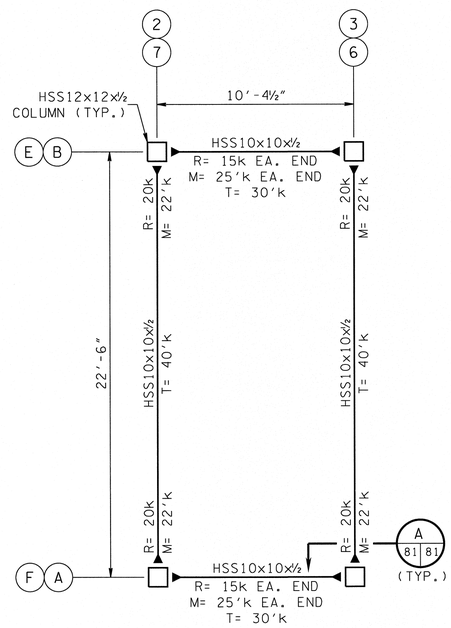

STAIR TOWER PLAN
T/S EL. 1246.41
SCALE: ¼" = 1'-0"

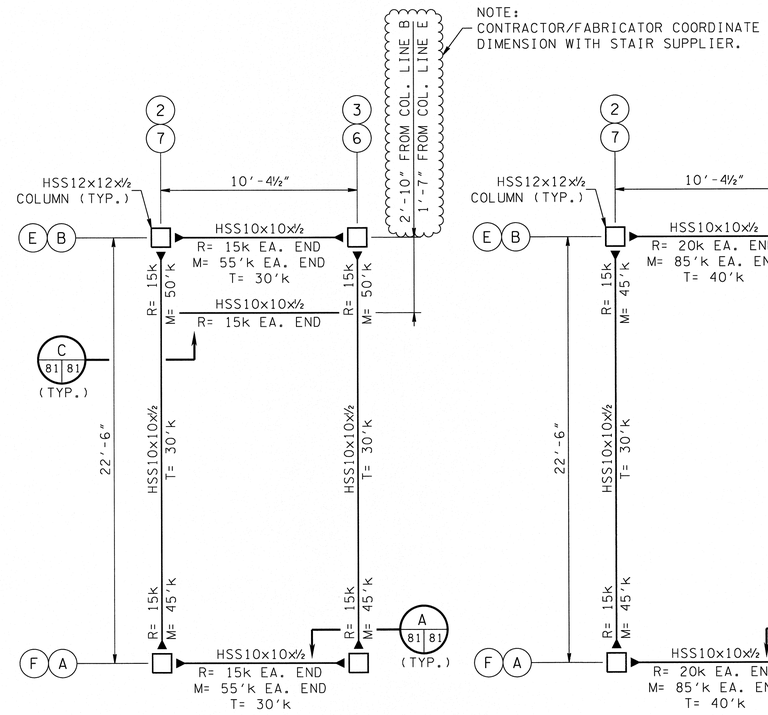

STAIR TOWER PLAN
T/S EL. 1236.50
SCALE: ¼" = 1'-0"

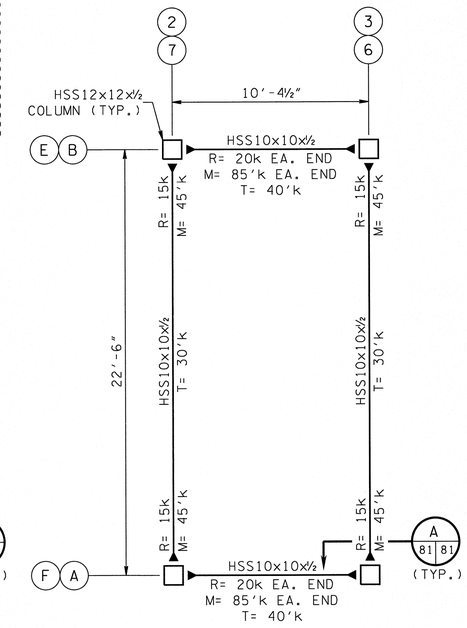

STAIR TOWER PLAN
T/S EL. 1227.42
SCALE: ¼" = 1'-0"

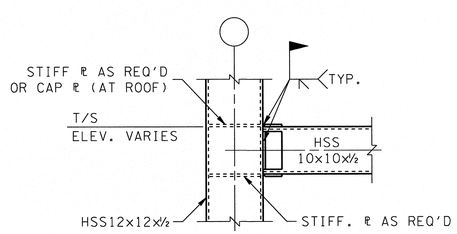

A 81 81 HSS TO HSS MOMENT CONN.
SCALE: ¾" = 1'-0"

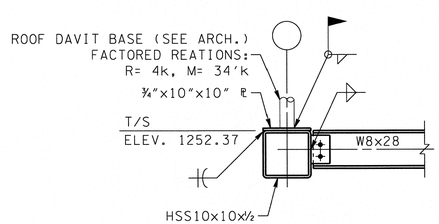

B 81 81 W8 TO HSS SHEAR CONN.
SCALE: ¾" = 1'-0"

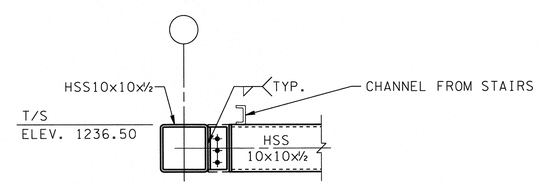

C 81 81 HSS TO HSS SHEAR CONN.
SCALE: ¾" = 1'-0"

UNOFFICIAL SET

NOT FOR BIDDING

STATE OF TENNESSEE
DEPARTMENT OF TRANSPORTATION

STAIR TOWER DETAILS
PEDESTRIAN BRIDGE
OVER WILCOX DRIVE
BR. I.D. NO. 82SR1260017
STATION 127+89.96
CITY OF KINGSPORT
SULLIVAN COUNTY
2014

STEVEN R. ALVIS REGISTERED ENGINEER CIVIL NO. 117318 STATE OF TENNESSEE 6/19/14

DESIGNED BY	S. ALVIS	DATE	05/2014
DRAWN BY	D. ALLEN	DATE	05/2014
SUPERVISED BY	C. THOMAS	DATE	05/2014
CHECKED BY	S. CAMPBELL	DATE	05/2014

6/19/2014 10:06:49 AM
V:\3130\Pedestrian Bridge\Drawings\Construction\Stair Tower.dgn

U-64-147

PROJECT NO.	YEAR	SHEET NO.
STP-126(19)	2014	82

REVISIONS

NO.	DATE	BY	BRIEF DESCRIPTION

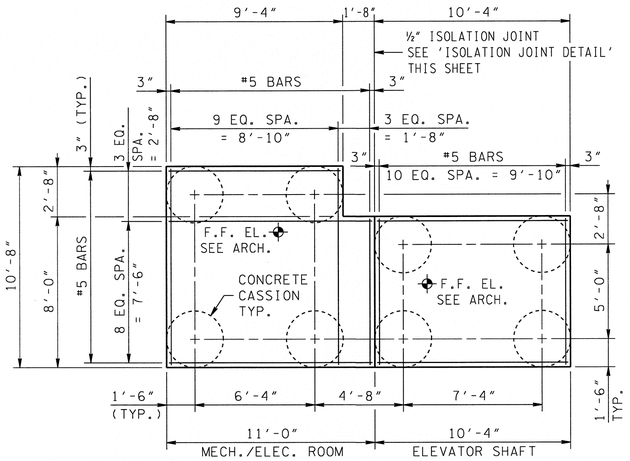

SLAB PLAN

SCALE: ⅛" = 1'-0"

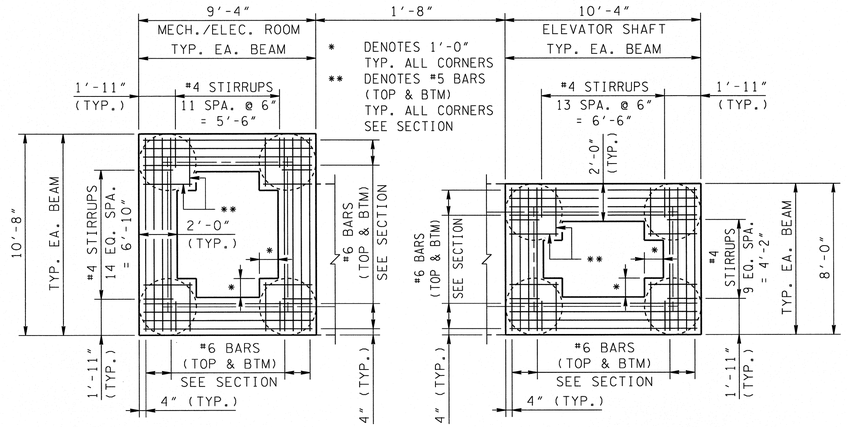

GRADE BEAM PLAN

SCALE: ¼" = 1'-0"

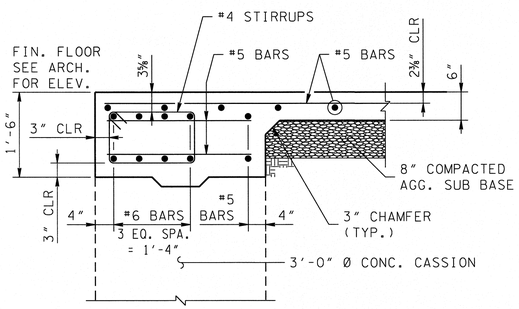

TYP. CASSION 'CAP' SECTION

SCALE: ¾" = 1'-0"

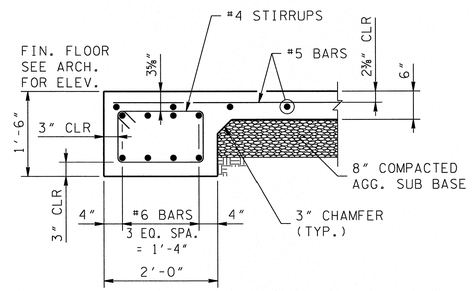

TYP. GRADE BEAM SECTION

SCALE: ¾" = 1'-0"

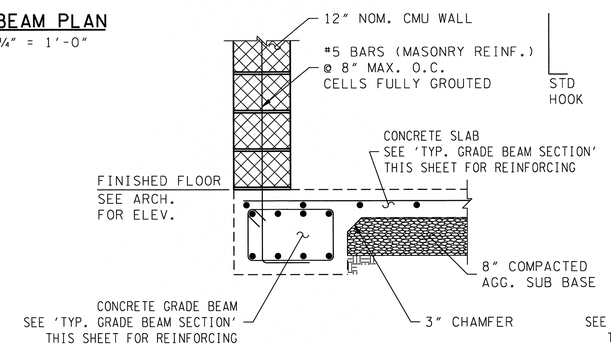

TYP. MASONRY TO SLAB DETAIL

SCALE: ¾" = 1'-0"

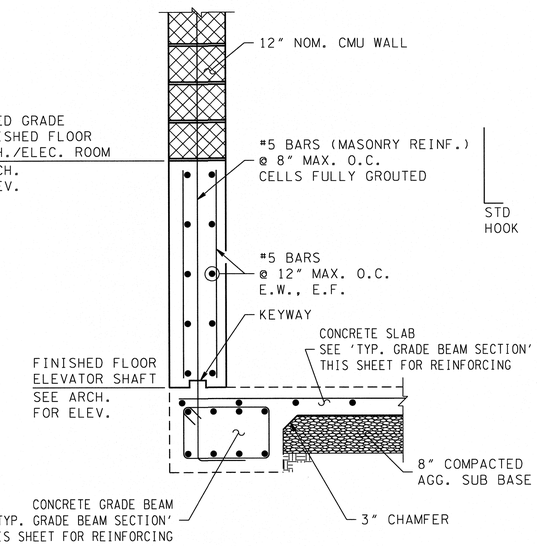

TYP. MASONRY TO CONC. W

SCALE: ¾" = 1'-0"

UNOFFICIAL SET

NOT FOR BIDDING

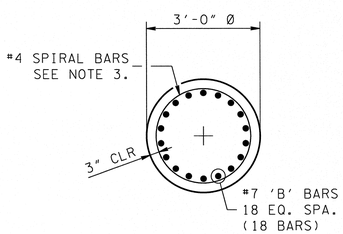

A 82|82 SECTION A

SCALE: ½" = 1'-0"

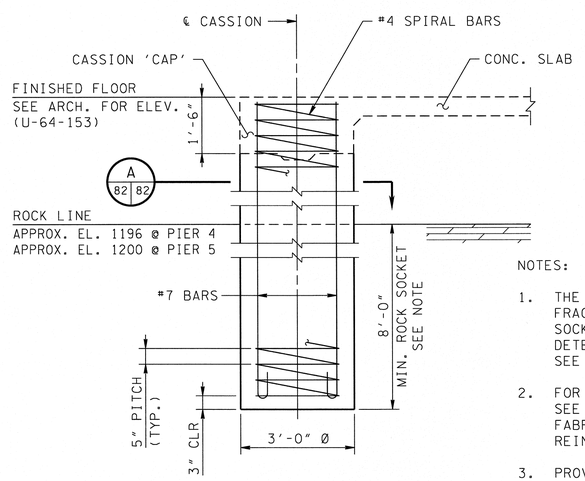

TYP. CASSION SECTION

SCALE: ½" = 1'-0"

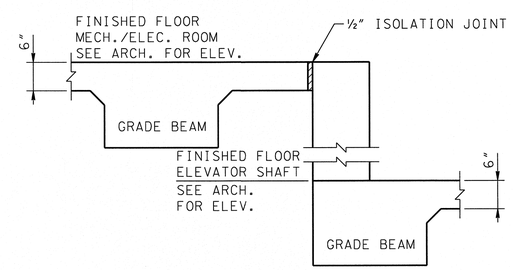

ISOLATION JOINT DETAIL

NO TO SCALE

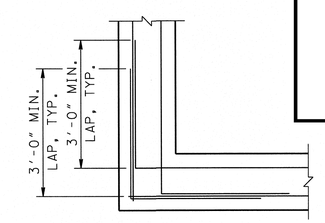

TYP. CONC. WALL CORNER DETAIL

NO TO SCALE

NOTES:

1. THE SUBSURFACE INVESTIGATION INDICATES A 2'-0" DEEP LAYER OF FRACTURED BEDROCK ABOVE COMPETENT BEDROCK. CONTRACTOR SHALL SOCKET CASSION A MINIMUM OF 6'-0" IN TO COMPETENT BEDROCK AS DETERMINED BY A GEOTECHNICAL ENGINEER IN THE FIELD. SEE DWG. NO. U-64-150 FOR ENGINEERING GEOLOGY.
2. FOR REINFORCING STEEL FABRICATION AND SUBMITTAL REQUIREMENTS, SEE GENERAL NOTES ON DWG. NOS. U-64-138 AND U-64-139. FABRICATOR SHALL DETAIL AND PROVIDE PLACEMENT DRAWINGS OF REINFORCING STEEL FOR ELEVATOR, MECHANICAL, AND ELECTRICAL ROOMS.
3. PROVIDE AT LEAST 1½ ADDITIONAL FINISHING TURN AT EACH END.
4. SEE STANDARD DRAWING STD-6-2 FOR SPIRAL REINFORCEMENT DETAILS AND NOTES.

STATE OF TENNESSEE
DEPARTMENT OF TRANSPORTATION

ELEVATOR AND
MECH. ROOM DETAILS
PEDESTRIAN BRIDGE
OVER WILCOX DRIVE
BR. I.D. NO. 82SR1260017
STATION 127+89.96
CITY OF KINGSPORT
SULLIVAN COUNTY
2014

U-64-148

DESIGNED BY	S. ALVIS	DATE	05/2014
DRAWN BY	D. ALLEN	DATE	05/2014
SUPERVISED BY	C. THOMAS	DATE	05/2014
CHECKED BY	S. CAMPBELL	DATE	05/2014

6/19/2014 9:51:48 AM
V:\3130\Pedestrian Bridge\Drawings\Construction\Elevator Room.dgn

PROJECT NO.	YEAR	SHEET NO.
STP-126(19)	2014	83

REVISIONS

NO.	DATE	BY	BRIEF DESCRIPTION

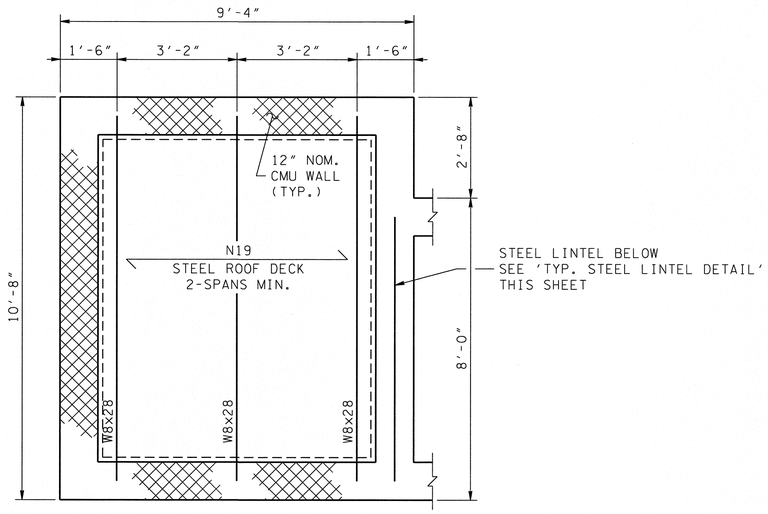

MECH./ELEC. ROOF PLAN - T/S EL. 1233.13

SCALE: ½" = 1'-0"

■ DENOTES DAVIT BASE.
WELD TO STRUCTURE.
QTY = 2.
SEE ARCH. SHEETS
FOR EXACT LOCATIONS.
SEE DAVIT DETAILS
SHEET U-64-144.

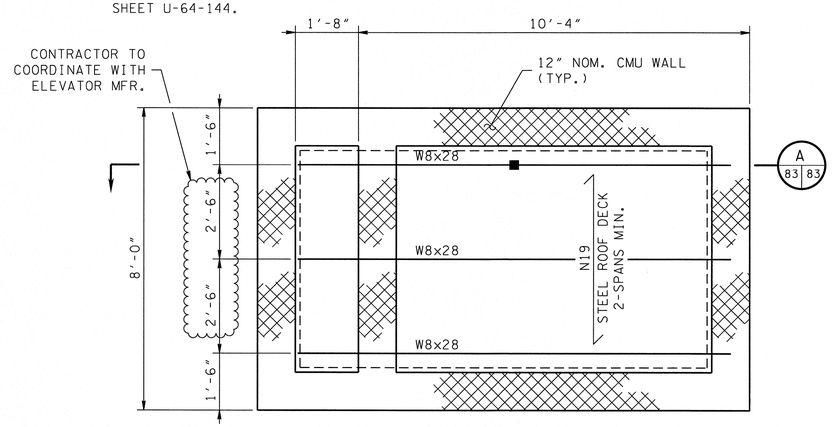

ELEVATOR ROOF PLAN - T/S EL. 1252.67

SCALE: ½" = 1'-0"

* COORDINATE DIMENSION WITH MFR
PRIOR TO CONSTRUCTION

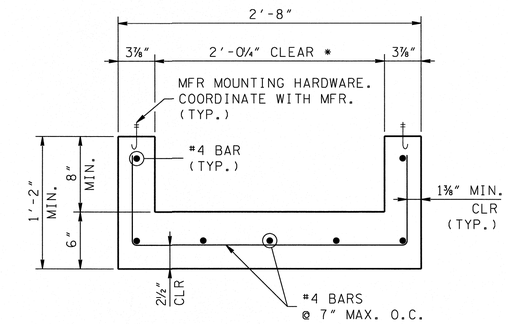

B 90 83 TYP. VRF SLAB SECTION

SCALE: 1½" = 1'-0"

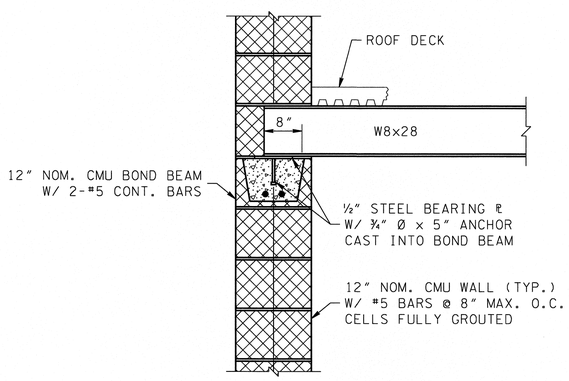

TYP. STEEL TO MASONRY BEARING DETAIL

SCALE: 1" = 1'-0"

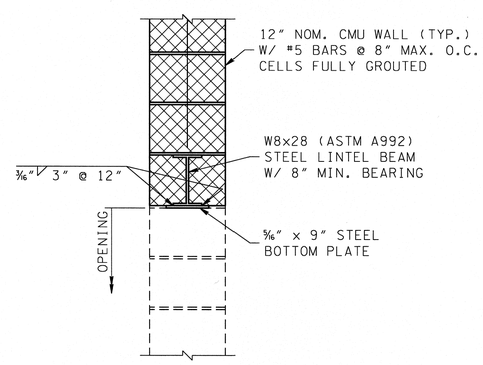

TYP. STEEL LINTEL DETAIL

SCALE: 1" = 1'-0"

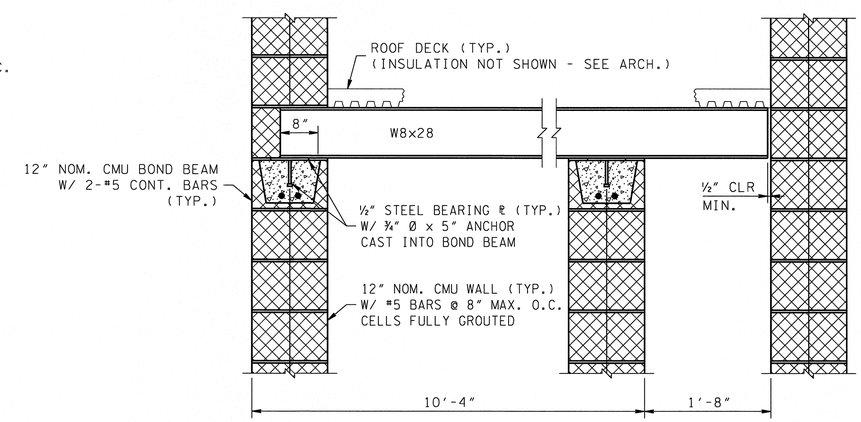

A 83 83 ELEVATOR ROOF SECTION

SCALE: 1" = 1'-0"

UNOFFICIAL SET

NOT FOR BIDDING

STATE OF TENNESSEE
DEPARTMENT OF TRANSPORTATION

ELEVATOR AND
MECH. ROOM DETAILS
PEDESTRIAN BRIDGE
OVER WILCOX DRIVE
BR. I.D. NO. 82SR1260017
STATION 127+89.96
CITY OF KINGSPORT
SULLIVAN COUNTY
2014

U-64-149

STEVEN R. ALVIS
REGISTERED ENGINEER
AGRICULTURE
COMMERCE
No. 117318
STATE OF TENNESSEE
6/20/14

DESIGNED BY	S. ALVIS	DATE	05/2014
DRAWN BY	D. ALLEN	DATE	05/2014
SUPERVISED BY	C. THOMAS	DATE	05/2014
CHECKED BY	S. CAMPBELL	DATE	05/2014

6/19/2014 9:52:19 AM
V:\313\Pedestrian Bridge\Drawings\Construction\Elevator Room.dgn

PROJECT NO.	YEAR	SHEET NO.
STP-126(19)	2014	84

REVISIONS

NO.	DATE	BY	BRIEF DESCRIPTION

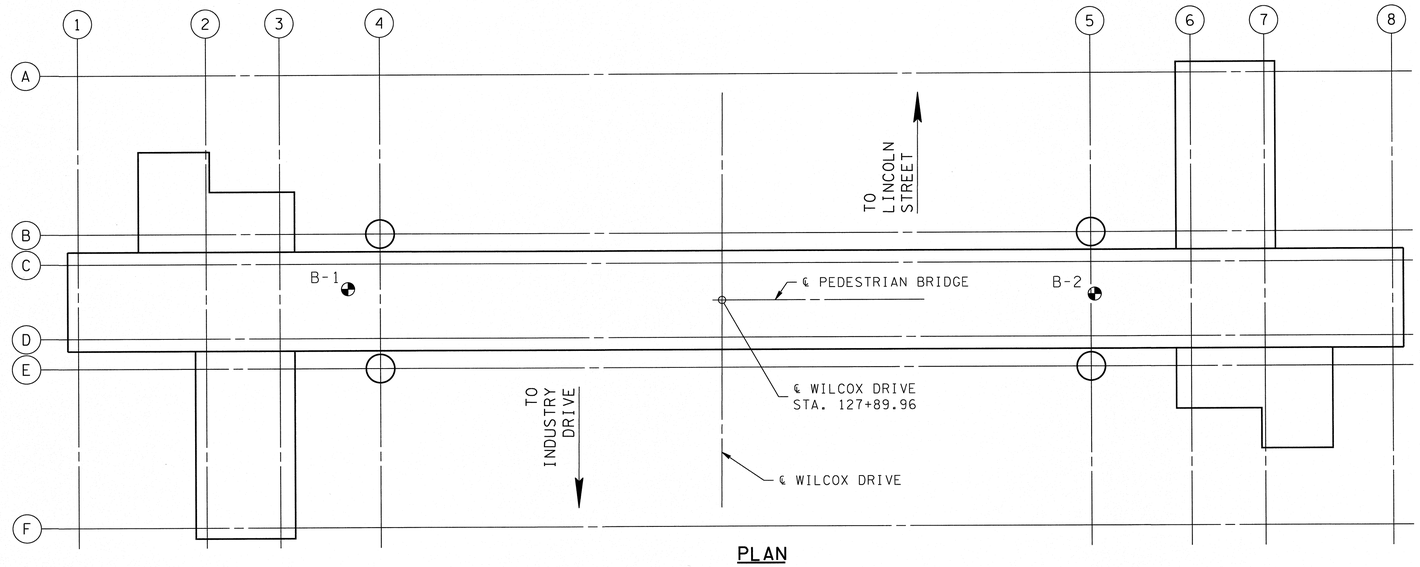

PLAN

NOT TO SCALE

BORING NO. B-1

PIER NO. 4

SURFACE ELEVATION: 1215.6 ft

DATE(S) DRILLED: 02/09/14
DRILLING METHOD(S): 3¼" H.S.A.
DRILL RIG: CME 55
OTHER TEST(S)
DRILLER: TILLERY
LOGGER: KCD

GROUND WATER

FIELD DATA: DEPTH (FT), ELEVATION (FT), SOIL (STANDARDED PENETRATION TEST / HAMMER BLOWS, SOIL RECOVERY (%), SAMPLE LEGEND, SAMPLE INTERVAL), ROCK (CORE RECOVERY (%), ROCK QUALITY DESIGNATION), STRATA LEGEND, FIELD DESCRIPTION OF STRATA, LAB DATA (LIQUID LIMIT LL, PLASTICITY INDEX PI, MOISTURE CONTENT (%))

Sample interval	Standard penetration test / hammer blows
1.5	10
3.0	12
4.0	
5.5	8
6.5	
8.0	50/.3
9.0	
10.5	7
14.0	
15.5	29
19.0	50/.3
19.5	

Core recovery (%): 80

Depth (ft)	Elevation (ft)
5	1210.6
10	1205.6
15	1200.6
20	1195.6
	1194.0
25	1190.6

FIELD DESCRIPTION OF STRATA

- TOPSOIL AND GRASS
- FILL- FIRM DARK BROWN TO BLACK SILTY CLAY WITH TOPSOIL AND GRAVEL
- ALLUVIUM- STIFF GRAY SANDY SILTY CLAY
- ALLUVIUM- FIRM BROWN TO GRAY SANDY SILTY CLAY
- ALLUVIUM- LOOSE, WET, BROWN TO GRAY SILTY SAND AND COBBLES
- RESIDUUM- VERY STIFF GRAY WEATHERED SILTY SHALE
  AUGER REFUSAL AT 19.6 FEET
- ESTIMATED COMPETENT ROCK
- MODERATELY HARD TO HARD GRAY SHALE WITH CALCITE FILLED VEINS. NOTE UPPER 2 FEET HIGHLY WEATHERED AND FRACTURED
- *BORING TERMINATED AT 29.6 FEET*

REMARKS:

BORING NO. B-2

PIER NO. 5

SURFACE ELEVATION: 1215.8 ft

DATE(S) DRILLED: 02/08/2014
DRILLING METHOD(S): 3¼" H.S.A.
DRILL RIG: CME 55
OTHER TEST(S)
DRILLER: TILLERY
LOGGER: KCD

GROUND WATER

FIELD DATA: DEPTH (FT), ELEVATION (FT), SOIL (STANDARDED PENETRATION TEST / HAMMER BLOWS, SOIL RECOVERY (%), SAMPLE LEGEND, SAMPLE INTERVAL), ROCK (CORE RECOVERY (%), ROCK QUALITY DESIGNATION), STRATA LEGEND, FIELD DESCRIPTION OF STRATA, LAB DATA (LIQUID LIMIT LL, PLASTICITY INDEX PI, MOISTURE CONTENT (%))

Sample interval	Standard penetration test / hammer blows
1.5	14
3.0	9
4.0	
5.5	6
6.5	
8.0	3
9.0	
10.5	38
14.0	50/.3
14.25	

Core recovery (%): 87

Depth (ft)	Elevation (ft)
5	1210.8
10	1205.8
15	1200.8
	1198.8
20	1195.8
25	1190.8

FIELD DESCRIPTION OF STRATA

- TOPSOIL AND GRASS
- FILL- FIRM DARK BROWN TO BLACK SILTY CLAY WITH GRAVEL
- ALLUVIUM- FIRM TAN GRAY SILTY CLAY
- ALLUVIUM- SOFT, WET, TAN TO GRAY SANDY SILTY CLAY
- ALLUVIUM- DENSE GRAY TO TAN SAND AND COBBLES
- RESIDUUM- HARD GRAY WEATHERED SILTY SHALE
  AUGER REFUSAL AT 15.0 FEET
- ESTIMATED COMPETENT ROCK
- MODERATELY HARD TO HARD GRAY SHALE WITH CALCITE FILLED VEINS
  NOTE UPPER 2 FEET HIGHLYL FRACTURED AND WEATHERED
- *BORING TERMINATED AT 25.0 FEET*

REMARKS:

UNOFFICIAL SET

NOT FOR BIDDING

STATE OF TENNESSEE
DEPARTMENT OF TRANSPORTATION

ENGINEERING GEOLOGY
PEDESTRIAN BRIDGE
OVER WILCOX DRIVE
BR. I.D. NO. 82SR1260017
STATION 127+89.96
CITY OF KINGSPORT
SULLIVAN COUNTY
2014

STEVEN R. ALVIS — REGISTERED ENGINEER — AGRICULTURE — COMMERCE — No. 117318 — STATE OF TENNESSEE — 6/30/14

DESIGNED BY	S. ALVIS	DATE	05/2014
DRAWN BY	D. ALLEN	DATE	05/2014
SUPERVISED BY	C. THOMAS	DATE	05/2014
CHECKED BY	S. CAMPBELL	DATE	05/2014

U-64-150

6/19/2014 9:54:57 AM
V:\313\C\Pedestrian Bridge\Drawings\Construction\Geology.dgn

PROJECT NO.	YEAR	SHEET NO.
STP - 126(19)	2014	86

REVISIONS

NO.	DATE	BY	DESCRIPTION

ABBREVIATIONS

@	AT OR AT THE RATE OF
ABV	ABOVE
ACT	ACOUSTICAL CEILING TILE
ADA	AMERICANS WITH DISABILITIES ACT
ADJ	ADJUSTABLE
AFF	ABOVE FINISHED FLOOR
ALUM	ALUMINUM
ANC	ANCHOR, ANCHORAGE
APX	APPROXIMATE
ARCH	ARCHITECT (URAL)
BEL	BELOW
BD	BOARD
BTWN	BETWEEN
BLDG	BUILDING
BLK	BLOCK
BOT	BOTTOM
BRK	BRICK
BS	BOTH SIDES
BSMT	BASEMENT
BW	OTH WAYS
CB	CATCH BASIN
CFT	CUBIC FOOT
CHAM	CHAMFER (ED)
CHT	CEILING HEIGHT
CI	CAST IRON
CIR	CIRCLE
CIRC	CIRCUMFERENCE
CIPC	CAST-IN-PLACE CONCRETE
CJ	CONTROL JOINT
CL	CENTERLINE
CLG	CEILING
CLR	CLEAR (ANCE)
CMU	CONCRETE MASONRY UNIT
CO	CLEAN OUT
COL	COLUMN
CONC	CONCRETE
CONST	CONSTRUCTION
CONT	CONTINUOUS OR CONTINUE
CORR	CORRUGATED
CPT	CARPET (ED)
CT	CERAMIC TILE
CTR	CENTER
CYD	CUBIC YARD
D	DEEP
DBL	DOUBLE
DET	DETAIL
DF	DRINKING FOUNTAIN
DIA	DIAMETER
DIAG	DIAGONAL
DIM	DIMENSION
DL	DEAD LOAD
DO	DOOR OPENING
DR	DOOR
DS	DOWNSPOUT
DWG	DRAWING
DWR	DRAWER
E	EAST
EA	EACH
EB	EXPANSION BOLT
EF	EACH FACE
EJ	EXPANSION JOINT
EL	ELEVATION
EQ	EQUAL
EQP	EQUIPMENT
EST	ESTIMATE
EWC	ELECTRIC WATER COOLER
EXCA	EXCAVATE
EXIST	EXISTING
EXP	EXPANSION
EXT	EXTERIOR
FA	FIRE ALARM
FBO	FURNISHED BY OTHERS
FD	FLOOR DRAIN
FDN	FOUNDATION
FE	FIRE EXTINGUISHER
FEC	FIRE EXTINGUISHER CABINET
FIN	FINISH (ED)
FLG	FLANGE
FLR	FLOOR (ING)
FO	FRAME OPENING
FOC	FACE OF CONCRETE
FOF	FACE OF FINISH
FOM	FACE OF MASONRY
FOS	FACE OF STUDS
FT	FOOT, FEET
FTG	FOOTING
FUT	FUTURE
FV	FIELD VERIFY
GA	GAGE, GAUGE
GALV	GALVANIZED, HOT DIPPED
GT	GROUT
GYP BD	GYPSUM BOARD
GYP	GYPSUM
HB	HOSE BIBB
HC	HANDICAPPED
HD	HEAVY DUTY
HDR	HEADER
HDW	HARDWARE
HM	HOLLOW METAL
HORZ	HORIZONTAL
HT	HEIGHT
HVAC	HEATING, VENT, AIR CONDITION
HWD	HARDWOOD
HWH	HOT WATER HEATER
ID	INSIDE DIAMETER
IN	INCH, INCHES
INCL	INCLUDE (D), (ING)
INSUL	INSULATING, INSULATION
INT	INTERIOR
INV	INVERT
JT	JOINT
L	LENGTH
LAV	LAVATORY
LH	LEFT HAND
LHR	LEFT HAND REVERSE
LL	LIVE LOAD
LP	LIGHT POLE
LPT	LOW POINT
LT	LIGHT
LTL	LINTEL
MAS	MASONRY
MATL	MATERIAL
MAX	MAXIMUM
MECH	MECHANICAL
MFR	MANUFACTURE (ER)
MIN	MINIMUM
MISC	MISCELLANEOUS
MO	MASONRY OPENING
MRG	MOISTURE RESISTANT GYPSUM BOARD
MTL	METAL
N	NORTH
NIC	NOT IN CONTRACT
NOM	NOMINAL
NTS	NOT TO SCALE
OA	OVERALL
OC	ON CENTER
OD	OUTSIDE DIAMETER
OPH	OPPOSITE HAND
OPNG	OPENING
OPP	OPPOSITE
PLAM	PLASTIC LAMINATE
PSF	POUNDS PER SQUARE FOOT
PSI	POUNDS PER SQUARE INCH
PT	POINT
RAD	RADIUS
RB	RUBBER BASE
RCP	REINFORCED CONCRETE PIPE
RECT	RECTANGULAR
REM	REMOVE
REV	REVISION (S), REVISED
RH	RIGHT HAND
RHR	RIGHT HAND REVERSE
RM	ROOM
RO	ROUGH OPENING
S	SOUTH
SCH	SCHEDULE
SEC	SECTION
SHT	SHEET
SIM	SIMILAR
SL	SLEEVE
SPEC	SPECIFICATION (S)
SQ	SQUARE
STD	STANDARD
STL	STEEL
STR	STRUCTURAL
SUSP	SUSPENDED
T	TREAD
TOF	TOP OF FOOTING
TOS	TOP OF STEEL
TYP	TYPICAL
UL	UNDERWRITER'S LABORATORIES, INC
UN	UNLESS NOTED
VB	VINYL BASE
VERT	VERTICAL
W	WIDE
W/	WITH
WC	WATER CLOSET
WD	WOOD
WO	WITHOUT
WP	WORK POINT
WST	WEST
WWF	WELDED WIRE FABRIC

SYMBOLS

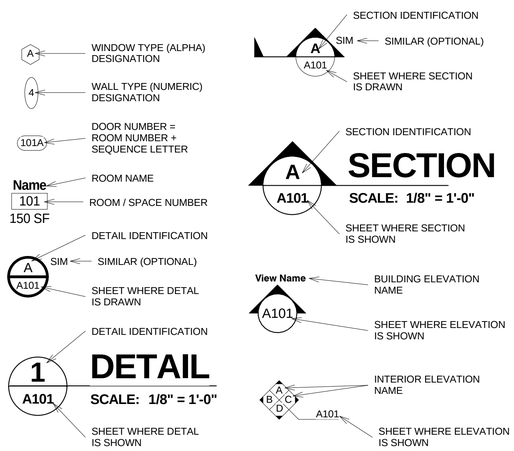

LEGEND

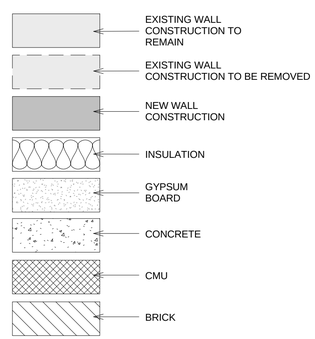

GENERAL NOTES

1. COMMON CONDITIONS
   - 1.1 CONTRACTOR SHALL THOROUGHLY EXAMINE THE PROJECT SITE PRIOR TO COMMENCEMENT OF DEMOLITION OPERATIONS. CONTRACTOR SHALL BE SOLELY RESPONSIBLE FOR THE VERIFICATION OF ACTUAL CONDITIONS SURROUNDING THE PROJECT. NEITHER THE OWNER NOR THE ARCHITECT MAKE ANY CLAIMS REGARDING THE COMPLETE ACCURACY OF EXISTING BUILDING DRAWINGS COMPARED TO THE ACTUAL, CURRENT CONDITIONS, OF THE BUILDING AND RELATED STRUCTURES.
   - 1.2 CONTRACTOR SHALL CONFINE HIS OPERATIONS TO THE IMMEDIATE VICINITY OF THE WORK SITE AS DIRECTED BY THE OWNER AND/OR ARCHITECT.
   - 1.3 CONTRACTOR SHALL COORDINATE THE LOCATIONS FOR THE STORAGE OF EQUIPMENT AND BUILDING MATERIALS WITH THE OWNER AND/OR ARCHITECT.
   - 1.4 THE CONTRACTOR SHALL ACCESS THE BUILDING ONLY FROM LOCATIONS APPROVED BY THE OWNER'S REPRESENTATIVE. CONSTRUCTION / DEMOLITION OPERATIONS SHALL NOT IMPEDE THE NORMAL FLOW OF TRAFFIC AT OTHER ENTRYWAYS.
   - 1.5 DURING CONSTRUCTION, THE CONTRACTOR SHALL BE RESPONSIBLE FOR THE PROTECTION OF THE BUILDING AND ITS CONTENTS FROM THE ELEMENTS AND FROM UNAUTHORIZED ENTRY. CONTRACTOR SHALL PROVIDE TEMPORARY CLOSURES AND BARRICADES AS REQUIRED TO MAINTAIN A SECURE ENVIRONMENT.
   - 1.6 CONTRACTOR SHALL NOT IMPEDE TRAFFIC FLOW IN ROADWAYS OR PARKING AREAS. COMPLETE ACCESS TO THE BUILDING BY EMERGENCY VEHICLES SHALL BE MAINTAINED AT ALL TIMES DURING CONSTRUCTION/DEMOLITION OPERATIONS.
   - 1.7 CONTRACTOR SHALL MAINTAIN TWO-WAY TRAFFIC IN ROADWAYS AT ALL TIMES, EXCEPT WHEN LIFTING THE PEDESTIAN BRIDGE TRUSS INTO PLACE. DURING PERIODS WHEN ONE LANE MUST BE CLOSED, PROVIDE TRAFFIC CONTROL MEASURES CONFORMING TO THE "MANUAL OF UNIFORM TRAFFIC CONTROL DEVICES", AND COMPLY WITH ALL CITY AND STATE STANDARDS AND PROCEDURES.
2. SITE
   - 2.1 NO BURNING OR BLASTING SHALL BE PERMITTED ON THE SITE.
   - 2.2 CONTRACTOR SHALL PROVIDE FENCING, BARRICADES, ETC., AS REQUIRED TO MAINTAIN A SECURED PERIMETER AROUND ALL AREAS OF WORK.
3. UTILITIES
   - 3.1 CONTRACTOR SHALL COORDINATE ANY REQUIRED SHUT-DOWN OF UTILITIES WITH THE LOCAL BODIES HAVING JURISDICTION. CONTRACTOR SHALL VERIFY THE LOCATION OF ALL UNDERGROUND UTILITIES PRIOR TO PERFORMING ANY EXCAVATION OPERATIONS. ANY DAMAGE TO EXIST. UNDERGROUND UTILITIES, INADVERTENT OR OTHERWISE, RESULTING FROM CONSTRUCTION OPERATIONS, SHALL BE REPAIRED OR REPLACED BY THE CONTRACTOR AT NO ADDITIONAL EXPENSE TO THE OWNER.
   - 3.2 ALL EXISTING UTILITIES IMPACTED BY THE REMOVAL OF MECHANICAL OR ELECTRICAL COMPONENTS SHALL BE CAPPED OR OTHERWISE APPROPRIATELY TERMINATED BY THE CONTRACTOR.
   - 3.3 ALL PIPES AND CONDUITS TO BE ABANDONED IN PLACE SHALL BE FILLED WITH FLOWABLE CONCRETE FILL AND SHALL HAVE OPEN ENDS CAPPED OR PLUGGED TO FORM A WATER TIGHT SEAL. PLUGGING OF LARGER PIPES SHALL BE ACCOMPLISHED BY INSTALLING BULKHEADS.
4. CONSTRUCTION
   - 4.1 UNLESS NOTED OTHERWISE, ALL SYSTEMS, COMPONENTS AND MATERIALS INDICATED FOR DEMOLITION SHALL BE REMOVED IN THEIR ENTIRETY, INCLUDING ALL APPURTENANCES.
   - 4.2 IF, DURING THE COURSE OF OPERATIONS, THE CONTRACTOR ENCOUNTERS ANY FORM OF HAZARDOUS MATERIAL, HE SHALL CEASE OPERATIONS IN THAT AREA AND IMMEDIATELY NOTIFY THE ARCHITECT AND ENGINEERS OF THE PRESENCE OF SUCH MATERIALS.
   - 4.3 CONTRACTOR SHALL PROVIDE TEMPORARY CONSTRUCTION WALLS AND CLOSURES AS REQUIRED TO PREVENT THE SPREAD AND INFILTRATION OF DUST AND DEBRIS TO OCCUPIED AREAS OF THE BUILDING.
   - 4.4 PLAN DIMENSIONS DENOTE:
     - 4.4.1 FACE OF NEW STUD TO FACE OF NEW STUD UNLESS OTHERWISE NOTED.
     - 4.4.2 FACES OF FINISH DIMENSIONS ARE DESIGNATED AS "F.O.F".
   - 4.5 THE USE OF ASBESTOS CONTAINING PRODUCTS AND MATERIALS IS FORBIDDEN.
   - 4.6 FIRE EXTINGUISHERS AND FIRE EXTINGUISHER CABINETS ARE NOTED AS "FEC" ON THE PLAN AND SHALL:
     - 4.6.1 BE TYPE "40-B:C"
     - 4.6.2 PROTRUDE NO MORE THAN 4" INTO CORRIDORS OR AISLES.
     - 4.6.3 FOR AN UNOBSTRUCTED APPROACH, THE MAXIMUM FORWARD REACH TO THE EQUIPMENT HANDLE IS 48" ABOVE THE FLOOR AND THE MAXIMUM SIDE REACH FOR SUCH AN APPROACH IS 54".
   - 4.7 ALL WALLS AND/OR PARTITIONS SHALL BE:
     - 4.7.1 CONTINUOUS TO UNDERSIDE OF DECKING ABOVE WHERE INDICATED.
     - 4.7.2 CONTINUOUS FROM TOP OF FLOOR SLAB TO MINIMUM 8" ABOVE FINISHED CEILING UNLESS OTHERWISE NOTED OR DETAILED.
   - 4.8 SOUND ATTENUATION:
     - 4.8.1 PROVIDE 3 1/2" THICK FIBERGLASS SOUND ATTENUATION BLANKET IN ALL WALLS.(TYP. FULL HEIGHT OF WALL)
     - 4.8.2 PROVIDE ONE BATTEN WIDTH OF 3 1/2" SOUND ATTENUATION ON EACH SIDE OF COMMON WALLS ABOVE EACH CONFERENCE ROOM AND OFFICE SPACE CEILING.
     - 4.8.3 SET WALL FLOOR PLATES IN ACOUSTICAL SEALANT.
   - 4.9 PROVIDE ALL WALL BLOCKING AS REQUIRED FOR FIXTURES, CASEWORK, EQUIPMENT, ACCESSORIES, ETC.
     - 4.9.1 ALL WOOD BLOCKING SHALL BE FIRE TREATED LUMBER.
     - 4.9.2 IN METAL STUD WALL CONSTRUCTION, PROVIDE 20 GA. STEEL STUDS,
   - 4.10 UNLESS OTHERWISE NOTED, INTERIOR STUD WALLS SHALL BE:
     - 4.10.1 CONSTRUCTED WITH METAL STUDS AT 16" ON CENTER,
     - 4.10.2 ONE (1) LAYER OF 5/8" THICK GYPSUM BOARD ON EACH FACE,
     - 4.10.3 ALL WALL AREAS SCHEDULED TO RECEIVE GYPSUM WALLBOARD, WHICH ARE WITHIN 1'-6" OF A PLUMBING LINE PENETRATION OR PLUMBING FIXTURE SHALL BE MOISTURE RESISTANT GYPSUM BOARD. WHETHER SCHEDULED ON FINISH SCHEDULE OR NOT.
     - 4.10.4 ALL GYPSUM BOARD PLUMBING CHASE WALLS SHALL BE CONSTRUCTED WITH MOISTURE RESISTANT GYPSUM BOARD IN THEIR ENTIRETY.
     - 4.10.5 PROVIDE VERTICAL CONTROL JOINTS AT ONE SIDE OF DOOR HEADS.
5. ITEMS NOT IN THE CONTRACT
   - 5.1 NEW CYLINDERS FOR HOLLOW METAL DOOR SHALL BE PROVIDED BY OWNER.

BUILDING DATA

THE PEDESTRIAN BRIDGE INCLUDES OF ELEVATORS, STAIR TOWERS, MECHANICAL ROOM, AND ELECTRICAL ROOM. AREA OF WORK CONSISTS OF 3,844 SF.

ALL NEW CONSTRUCTION SHALL BE IN COMPLIANCE WITH THE FOLLOWING CODES.

APPLICABLE CODES:

- NFPA 101 LIFE SAFETY CODE(2006 EDITION) FOR WALL CONDITIONS WHERE DOORS ARE REPLACED AND HVAC PENETRATIONS
- ICC INTERNATIONAL BUILDING CODE(2006 EDITION) FOR WALL CONDITIONS WHERE DOORS ARE REPLACED AND HVAC PENETRATIONS
- ICC INTERNATIONAL MECHANICAL CODE (2006 EDITION) FOR NEW HVAC WORK.
- NATIONAL ELECTRIC CODE(2005 EDITION) FOR NEW ELECTRICAL WORK.

(NOTE: IN INSTANCES WHERE THE SPECIFIC REQUIREMENTS OF ICC AND NFPA 101 DIFFER, THE MORE STRINGENT OF THE TWO CODES SHALL APPLY)

OCCUPANCY: GROUP B - BUSINESS (OFFICES)

CONSTRUCTION TYPE:

- ICC(TABLE 601)-TYPE IIB, UNPROTECTED, FULLY SPRINKLERED

GENERAL BUILDING LIMITATIONS:

- ICC (TABLE 503)-TYPE IIB, UNPROTECTED, FULLY SPRINKLERED,
- CALCULATED ALLOWABLE TOTAL FLOOR AREA=19,000SF.

WALL TYPE NOTES

1. CONTRACTOR TO VERIFY HAT CHANNELS GAUGES WITH MANUFACTURER'S LIMITING HEIGHTS.
2. REFER TO STRUCTURAL FOR REINFORCING FOR CMU WALLS.

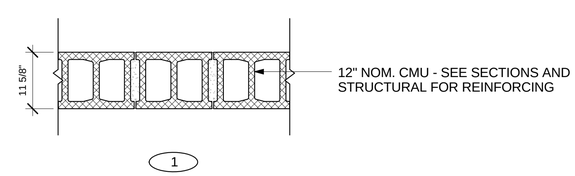

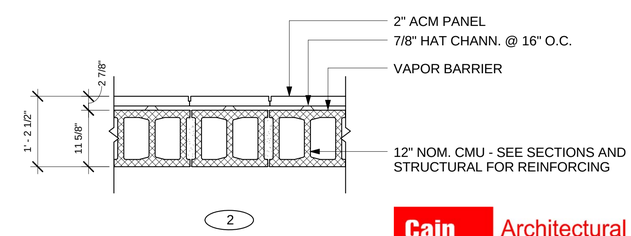

WALL TYPES

SCALE: 3/4" = 1'-0"

UNOFFICIAL SET

NOT FOR BIDDING

SEALED BY

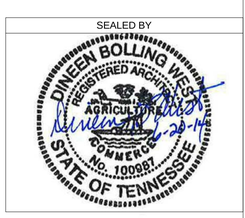

Cain Rash West
Architects
Architectural Services
130 Regional Park Dr.
Kingsport, TN 37660
Phn (423) 349-7760
Fax (423) 349-7413
www.grcinc.com

STATE OF TENNESSEE

DEPARTMENT OF TRANSPORTATION

LEGEND & DATA
PEDESTRIAN BRIDGE
OVER WILCOX DRIVE
BR. I.D. NO.
82SR1260017

U- 64 -151

checked WEST

drawn DARNELL

plotted on: 6/19/2014 10:22:34 AM

SULLIVAN CO EASTMAN - PROJECT # 82065-3236-04 SHEET LABEL:

6/19/2014 10:22:34 AM

PROJECT NO.	YEAR	SHEET NO.
STP - 126(19)	2014	87

REVISIONS

NO.	DATE	BY	DESCRIPTION

SITE WORK QUANTITIES

DESCRIPTION	AREA/UNITS	TOTAL QUANTITY
CONCRETE STAIRS 8'(W) X 3'-8" (D)	AREA/SQFT	29.33 sqft
CONCRETE STAIRS 8'(W) X 5'-6" (D)	AREA/SQFT	44.00 sqft
GALVANIZED HANDRAILS 1 1/2" ROUND X 6'-3" (D) X 3' (H)		2 SET
GALVANIZED HANDRAILS 1 1/2" ROUND X 8'-6" (D) X 3' (H)		2 SET
6" CONCRETE EDGE	AREA/SQFT	77.00 sqft
4" TO 6" RIVER ROCKS	AREA/SQFT	780.00 sqft
SOIL SEPARATOR FABRIC	AREA/SQFT	780.00 sqft
4" EXTERIOR CONCRETE SLAB , HEAVY BROOM FINISH	AREA/SQFT	1,180.00 sqft
FENCE	FEET	26 sqft
GATE		1
LIGHT BOLLARDS		20

NOTES :

- **ALL QUANITITIES ARE APPROXIMATE AND SHALL BE VERIFIED BY THE CONTRACTOR PRIOR TO BIDDING. CONTRACTOR SHALL BE SOLELY RESPONSIBLE FOR FINAL DETERMINATION OF ACUTAL MATERIAL AND COMPONENT QUANTITIES.**

STAIR & ELEVATOR QUANTITIES

DESCRIPTION	AREA/UNITS	TOTAL QUANTITY
STAINLESS STEEL PIPE HANDRAIL SETS		8
ELEVATORS, MACHINELESS ROOM HYDRAULIC		2
ELEVATORS, DOORS		4
ELEVATORS, DOOR FRAMES		4

FINISHES QUANTITIES

DESCRIPTION	AREA/UNITS	TOTAL QUANTITY
24" X 24" ACOUSTICAL CEILING TILE/GRID	AREA/SQFT	1,080.00 sqft
AXIOM KNIFE EDGE CEILING TRIM	AREA/SQFT	312.00 sqft
BRIDGE FLOORING (CARPET TILE)	AREA/SQFT	2,320.00 sqft
ELEVATORS FLOORING (CARPET TILE)	AREA/SQFT	70.00 sqft
SEALED CONCRETE FLOORS	AREA/SQFT	1,255.00 sqft

WALL & ROOF QUANTITIES

DESCRIPTION	AREA/UNITS	TOTAL QUANTITY
60 MIL WHITE TPO ROOF MEMBRANE	AREA/SQFT	3,220.00 sqft
RIGID INSULATION BOARD	AREA/SQFT	3,220.00 sqft
ALUMINUM COPING	AREA/SQFT	472.00 sqft
BELLOW EXPANSION JOINT	AREA/SQFT	152.00 sqft
CURTAIN WALL SYSTEM	AREA/SQFT	15,728.00 sqft
12" CMU WALL CONSTRUCTION	AREA/SQFT	3,900.00 sqft
LINEAR ACM METAL PANELS	AREA/SQFT	2,350.00 sqft
ACM METAL PANELS	AREA/SQFT	3,900.00 sqft
METAL COLUMN WRAPS	AREA/SQFT	460.00 sqft
METAL FLOOR DECKING	AREA/SQFT	2,800.00 sqft
METAL ROOF DECKING	AREA/SQFT	3,220.00 sqft
ROOF HATCH 3'-0" x 2'-6"		1

DOOR QUANTITIES

DESCRIPTION	AREA/UNITS	TOTAL QUANTITY
EXTERIOR STEEL DOORS 3'-0" X 7'-0"		2
GLASS STOREFRONT DOORS 3'-0" X 7'-0"		4

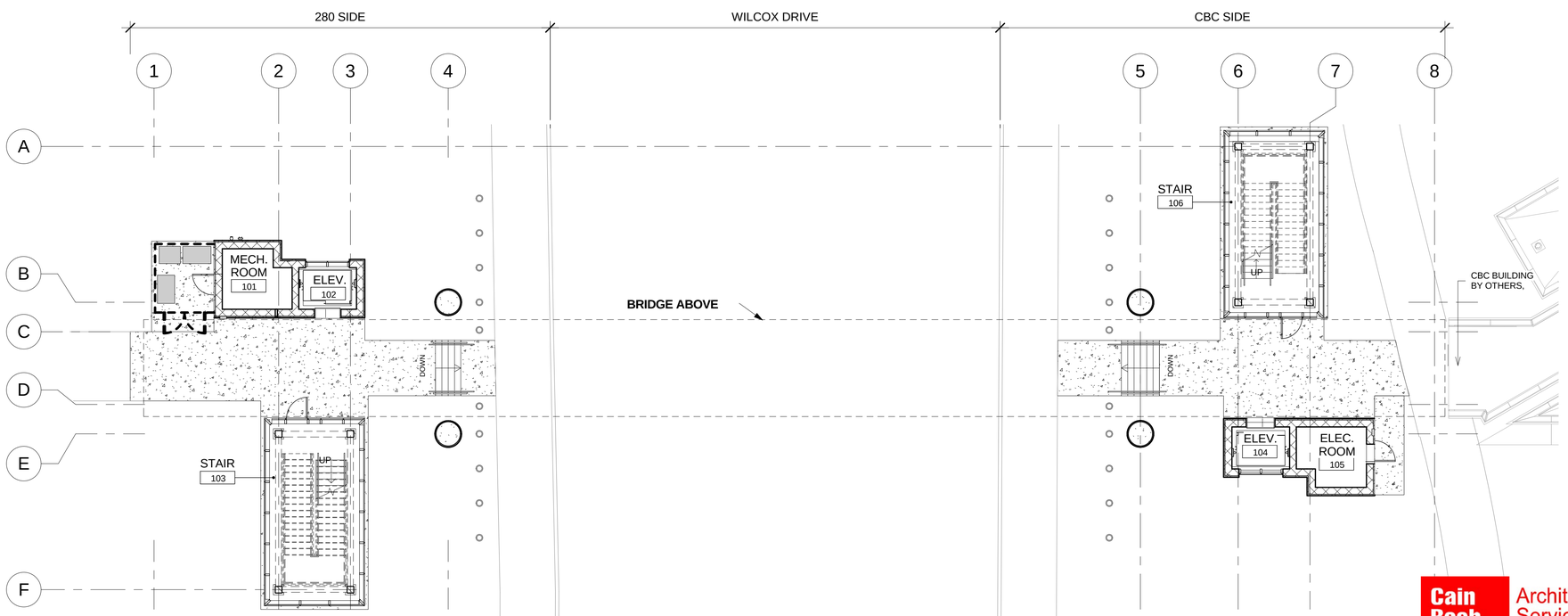

KEY PLAN

SCALE: 1" = 10'-0"

AREA = 3,844 SQFT

PLAN NORTH

TRUE NORTH

UNOFFICIAL SET

NOT FOR BIDDING

SEALED BY

DINEEN BOLLING WEST
REGISTERED ARCHITECT
AGRICULTURE
COMMERCE
No. 100987
STATE OF TENNESSEE
6-20-14

Cain Rash West
Architects

Architectural Services
130 Regional Park Dr.
Kingsport, TN 37660
Phn (423) 349-7760
Fax (423) 349-7413
www.grcinc.com

6/19/2014 3:09:33 PM

STATE OF TENNESSEE
DEPARTMENT OF TRANSPORTATION

KEY PLAN/ QUANTITIES
PEDESTRIAN BRIDGE OVER WILCOX DRIVE
BR. I.D. NO. 82SR1260017

U- 64 -152

plotted on: 6/19/2014 3:09:33 PM
SULLIVAN CO EASTMAN - PROJECT # 82085-3236-04
SHEET LABEL:

checked WEST
drawn DARNELL

AMETCO MANUFACTURING CORPORATION
4326 HAMANN PARKWAY P.O. BOX 1210
WILLOUGHBY, OHIO 44096
TOLL FREE: 1-800-321-7042
PHONE: (440) 951-4300
FAX: (440) 951-2542
www.ametco.com

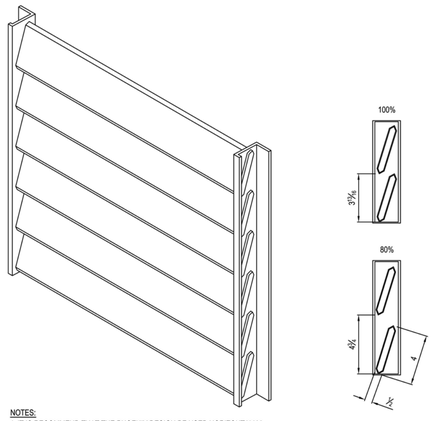

NOTES:
1. IT IS RECOMMEND THAT THE PHOENIX DESIGN BE USED HORIZONTALLY.
2. INSTALLATION TO BE COMPLETED IN ACCORDANCE WITH MANUFACTURER'S SPECIFICATIONS.
3. ALL DIMENSIONS ARE CONSIDERED TRUE AND REFLECT MANUFACTURER'S SPECIFICATIONS.
4. AMETCO'S ALUMINUM FENCING SYSTEM IS 100% MANUFACTURED IN THE UNITED STATES.
5. DO NOT SCALE DRAWINGS.
6. CONTRACTOR'S NOTE: FOR PRODUCT AND COMPANY INFORMATION VISIT www.CADdetails.com/info REFERENCE NUMBER 048-090

E/88 ALUMINUM FENCE SYSTEMS

PHOENIX ALUMINUM FENCE DESIGN SYSTEM

048-090

PROTECTED BY COPYRIGHT - 05/24/06 www.CADdetails.com

AMETCO MANUFACTURING CORPORATION
4326 HAMANN PARKWAY P.O. BOX 1210
WILLOUGHBY, OHIO 44096
800-321-7042 TOLL FREE
PHONE: (440) 951-4300
FAX: (440) 951-2542
www.ametco.com

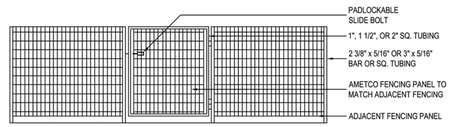

NOTES:
1. INSTALLATION TO BE COMPLETED IN ACCORDANCE WITH MANUFACTURER'S SPECIFICATIONS.
2. DO NOT SCALE DRAWINGS.

D/88 TYPICAL PEDESTRIAN SINGLE GATE

N.T.S.

048-070

PROTECTED BY COPYRIGHT - 05/24/06 www.CADdetails.com

GENERAL NOTES:

- DETAILS D/88 AND E/88 ARE STANDARD DETAILS FROM AMETCO AND ARE INTENDED TO ESTABLISH A STANDARD OF QUALITY. ONLY KEY DETAILS HAVE BEEN SELECTED. OTHER "ANCILLARY" DETAILS REQUIRED FOR COMPLETE SYSTEM MAY NOT BE SHOWN.

- OTHER MANUFACTURERS SUCH AS LOUVRE TEC, POLY VINYL CREATIONS, OR EQUAL (OR SUPERIOR) PRODUCTS BY ALTERNATE MANUFACTURERS MUST BE SUBMITTED AND APPROVED. DETERMINATION AS TO THE EQUALITY OF PROPOSED SUBSTITUTIONS SHALL BE MADE BY THE ARCHITECT & TDOT. FOR THE FINAL SELECTED PRODUCT, IT IS EXPECTED THAT THE CONTRACTOR COMPLY WITH ALL OF THE MANUFACTURER'S DETAILS FOR A WARRANTED PRODUCT.

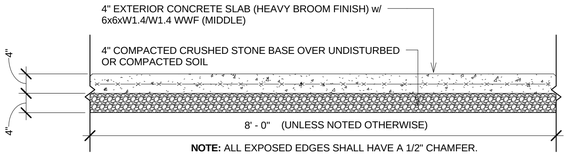

C/88 TYPICAL SIDEWALK

SCALE: 3/4" = 1'-0"

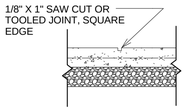

B/88 CONTROL JOINT (CT)

SCALE: 3/4" = 1'-0"

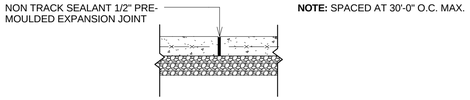

A/88 EXPANSION JOINT (EJ)

SCALE: 3/4" = 1'-0"

PROJECT NO.	YEAR	SHEET NO.
STP - 126(19)	2014	88

REVISIONS

NO.	DATE	BY	DESCRIPTION

SITE NOTES

1. ALL EXISTING SIDEWALKS ELEVATIONS AND SITE UTILITIES ARE TO BE FIELD VERIFIED PRIOR TO CONSTRUCTION.
2. FOR PURPOSES OF ESTABLISHING SUB-GRADES, THE FOLLOWING FINISH SURFACE THICKNESSES ARE APPLICABLE: BUILDING: 12" (8" SLAB,4" BASE STONE).
3. TYPICAL STARTING ELEVATION FOR EXTERIOR CONCRETE PADS THAT ABUT THE BUILDING IS 1/2" BELOW ADJOINING INTERIOR FLOOR SLAB ELEVATION @ DOORS AND 1 1/2" BELOW @ ALL OTHER LOCATIONS. EXTERIOR SLABS SHALL SLOPE DOWN 1/4" PER FLOOR TOWARDS EDGE OF SLAB, UNLESS NOTED OTHERWISE. PADS SHALL HAVE A HEAVY BROOM FINISH.
4. MINIMUM AND MAXIMUM SLOPES SHALL BE AS FOLLOWS:
   -ALL EXTERIOR SURFACES SHALL HAVE A MINIMUM 1/4" PER FOOT SLOPE TO PREVENT PONDING.
   - ALL SIDEWALK SLOPES SHALL NOT EXCEED 1:20.
   - ALL CURB CUTS AND RAMPS SHALL NOT EXCEED 1:12.
5. PROVIDE POSITIVE DRAINAGE FROM ALL LOW POINTS TO PREVENT PONDING OF SURFACE RUN-OFF.
6. PROVIDE A MINIMUM OF 6" TOPSOIL AND SEEDING OVER ALL DISTURBED YARD AND/OR LANDSCAPE AREAS.

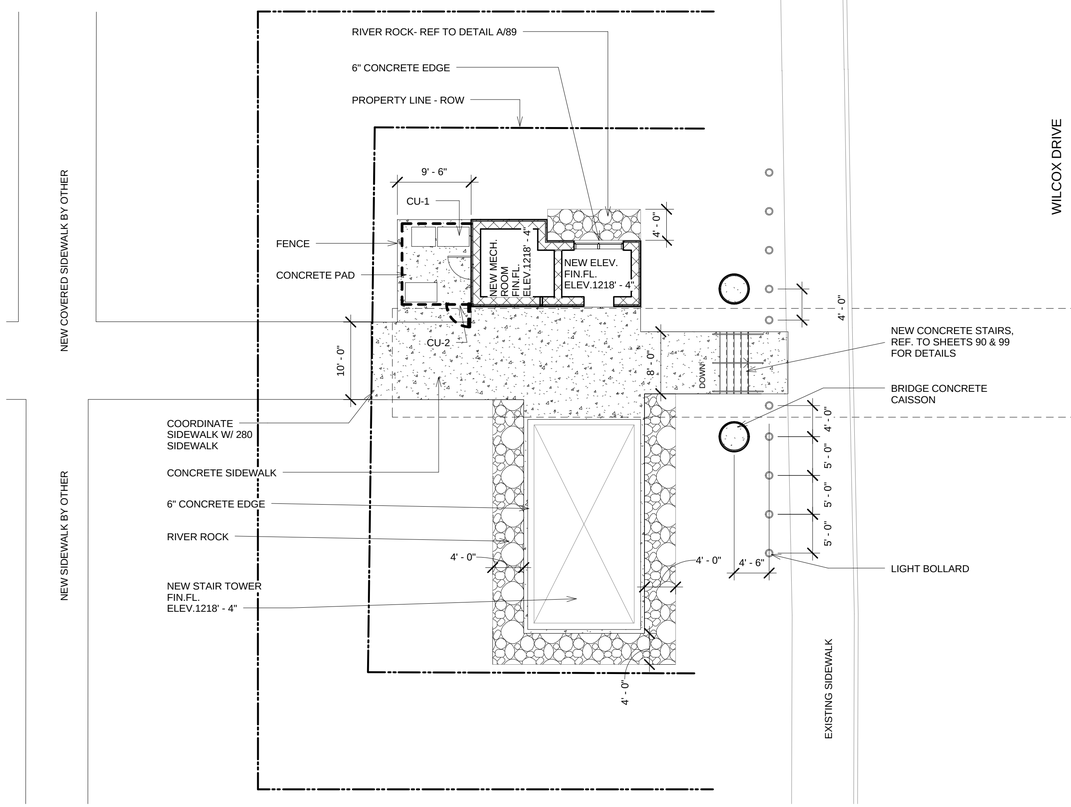

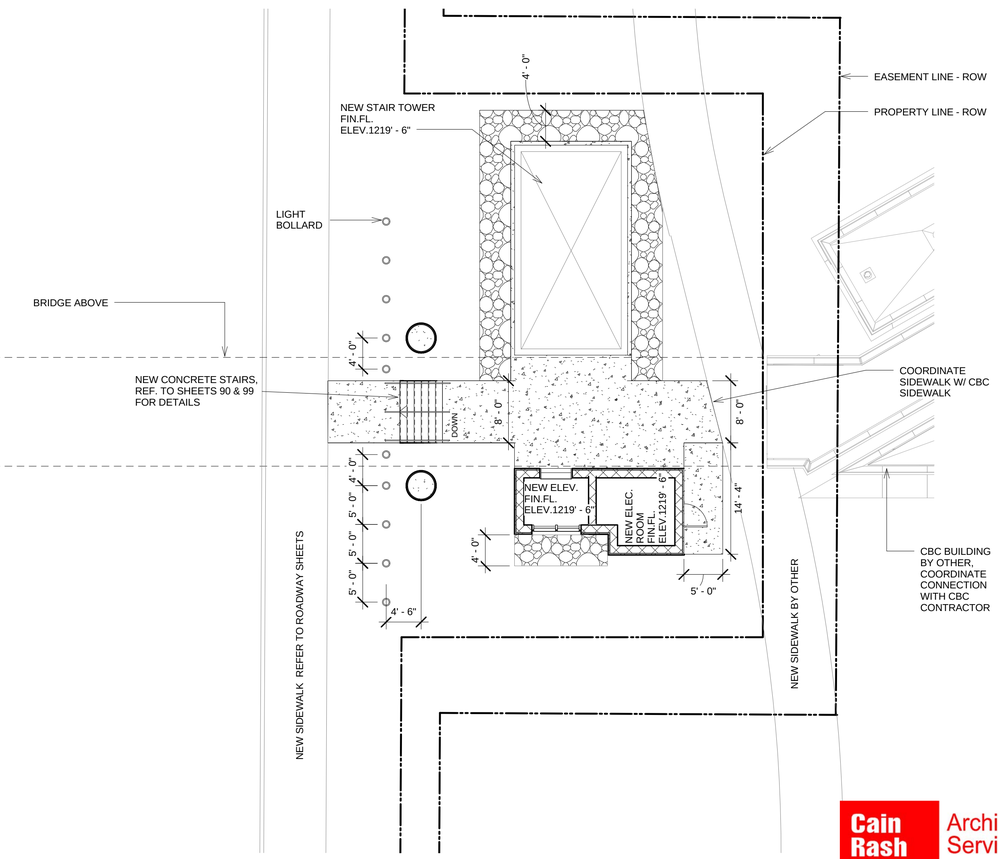

0' 5' 10' 20' 30'
GRAPHIC SCALE
1" = 20'-0"

SITE PLAN

SCALE: 1" = 10'-0"

PLAN NORTH
TRUE NORTH

UNOFFICIAL SET

NOT FOR BIDDING

SEALED BY

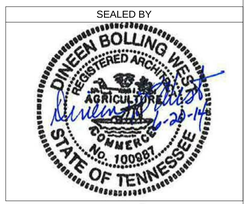

Cain Rash West
Architects
Architectural Services
130 Regional Park Dr.
Kingsport, TN 37660
Phn (423) 349-7760
Fax (423) 349-7413
www.grcinc.com

STATE OF TENNESSEE
DEPARTMENT OF TRANSPORTATION

SITE PLAN
PEDESTRIAN BRIDGE
OVER WILCOX DRIVE
BR. I.D. NO.
82SR1260017

U- 64 -153

6/19/2014 9:27:12 AM

plotted on: 6/19/2014 9:27:12 AM
SULLIVAN CO EASTMAN - PROJECT # 82085-3236-04 SHEET LABEL:

checked WEST
drawn DARNELL

PROJECT NO.	YEAR	SHEET NO.
STP - 126(19)	2014	89

REVISIONS

NO.	DATE	BY	DESCRIPTION

LANDSCAPING SCHEDULE

	MARK	QUANT.	SCIENTIFIC NAME	COMMON NAME
TREES	ICB	4	Ilec cornuta 'Burfordii'	Burford Chinese Holly
	LM	4	Lagerstroemia x 'Muskogee'	Lavender Crape Myrtle
SHRUBS	BTA	12	Berberis thunbergii 'Atropurpurea Nana'	Dwarf Redleaf Japanses Barberry
	ICC	19	Ilex cornuta 'Carissa'	Carissa Holly
	ICH	4	Ilex crenata 'Hoogendoom'	Hoogendoom Japanese Holly
	RPK	8	Rosa x 'Pink Knockout'	Rose
GROUND	LB	121	Liriope muscari 'Big Blue'	Big Blue Lilyturf

LANDSCAPE NOTES

1. ALL LANDSCAPED AREAS TO RECEIVE A MIN. OF 6" THICK CLEAN TOPSOIL.
2. SOD ALL DISTURBED AREAS DUE TO NEW CONSTRUCTION.
3. REPLACE ANY LANDSCAPING DAMAGED BY NEW CONSTRUCTION.
4. MULCH AROUND ALL TREES, TYP.

SITE LEGEND

	PROPERTY LINES
1212	EXISTING CONTOURS
54.15	FINISH SPOT ELEVATIONS
	EXISTING WATER LINES
	EXISTING ELECTRICAL LINES
	EXISTING TELEPHONE LINES

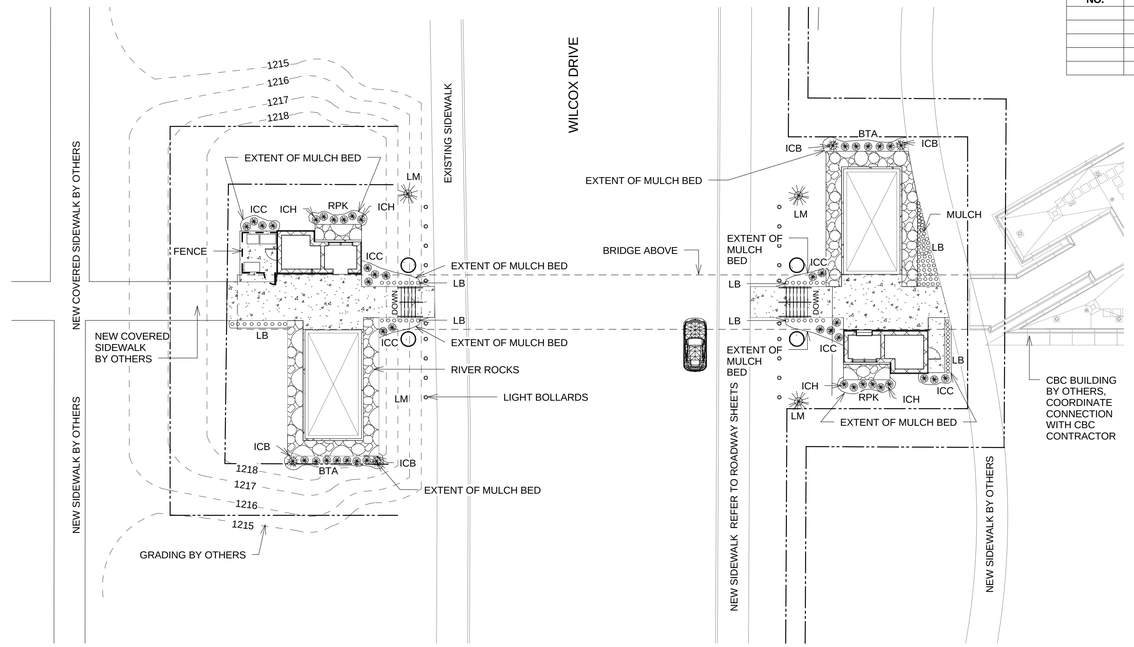

SITE/LANDSCAPE PLAN

SCALE: 1" = 20'-0"

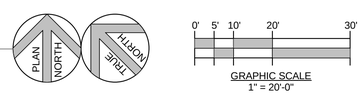

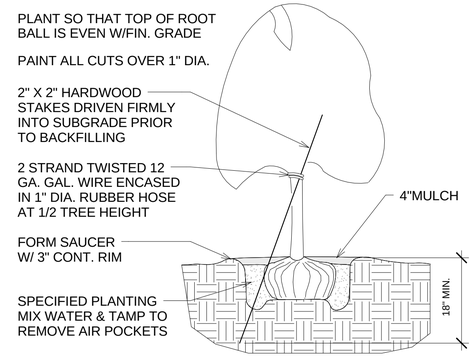

TREE PLANTING DETAIL

SCALE: 1/2" = 1'-0"

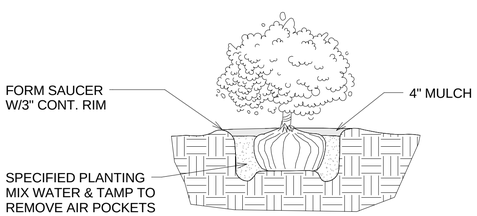

SHRUB PLANTING DETAIL

SCALE: 1/2" = 1'-0"

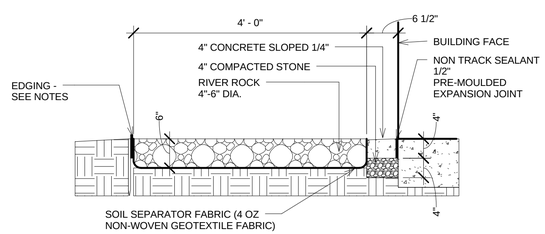

NOTES:
1. EDGING TO BE PROSLIDE COMMERCIAL GRADE EDGING, 1/8" x 5.5" WITH A BLACK DURAFLEX FINISH AS PROVIDED BY PERMALOC OR ACCEPTED SUBSTITUTION.
2. EDGING TO INCLUDE LOOPS TO RECEIVE STAKING

A
89

RIVER ROCK DETAIL

SCALE: 3/4" = 1'-0"

SITE/COORDINATES POINTS PLAN

SCALE: 1" = 20'-0"

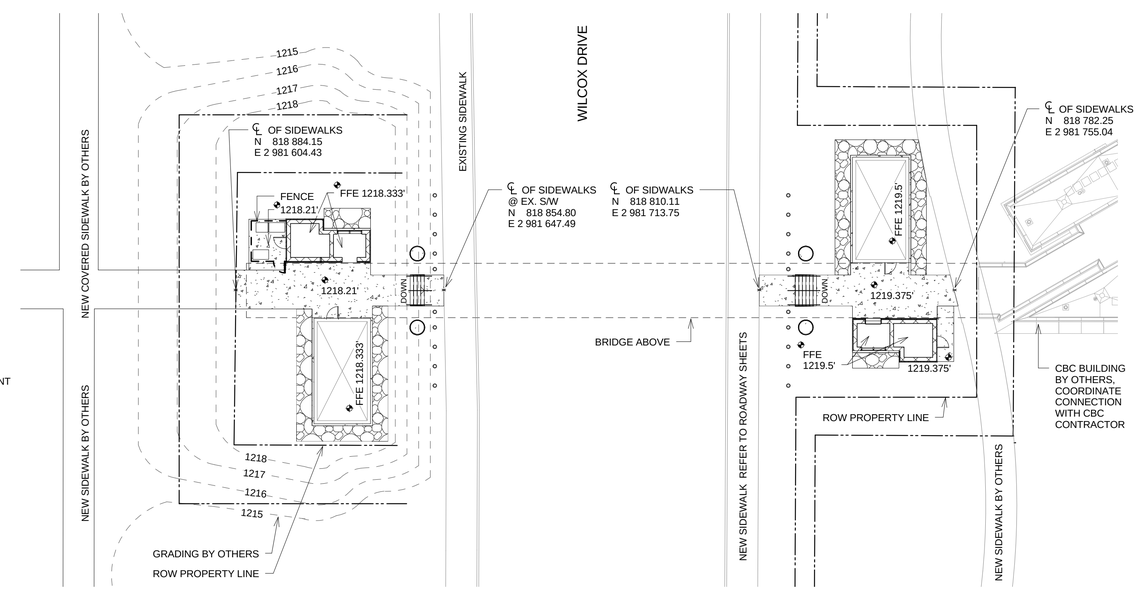

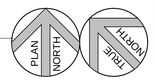

UNOFFICIAL SET
NOT FOR BIDDING

SEALED BY

STATE OF TENNESSEE
DEPARTMENT OF TRANSPORTATION

SITE/ LANDSCAPE PEDESTRIAN BRIDGE OVER WILCOX DRIVE BR. I.D. NO. 82SR1260017

U- 64 -154

Cain Rash West
Architects
Architectural Services
130 Regional Park Dr.
Kingsport, TN 37660
Phn (423) 349-7760
Fax (423) 349-7413
www.grcinc.com

plotted on: 6/19/2014 9:28:30 AM
SULLIVAN CO EASTMAN - PROJECT # 82085-3236-04 SHEET LABEL:

checked	WEST
drawn	DARNELL

6/19/2014 9:28:30 AM

PROJECT NO.	YEAR	SHEET NO.
STP - 126(19)	2014	90

REVISIONS

NO.	DATE	BY	DESCRIPTION

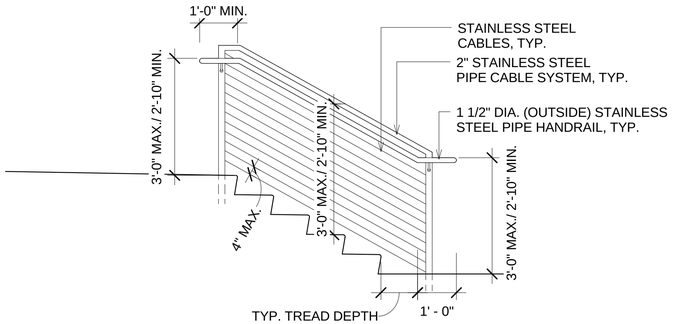

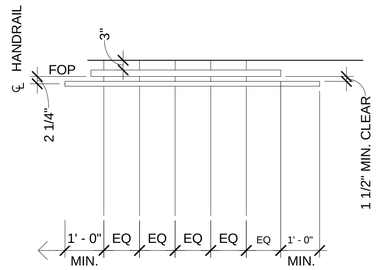

NOTE: OPEN SIDES OF A MEANS OF EGREES STAIR THAT EXCEEDS 30" ABOVE THE FLOOR OR GRADE BELOW REQUIRE A 42" HIGH GUARDRAIL

TYPICAL STAIR HANDRAIL DETAIL

SCALE: 1/2" = 1'-0"

PLAN NOTES

1. FOR GENERAL NOTES AND WALL TYPES SEE DRAWING SHEET 86.
2. DIMENSIONS FOR MECHANICAL, ELECTRICAL, AND ELEVATORS ARE TO FACE OF CMU.
3. SEE STRUCTURAL DRAWINGS FOR SIZES ON ALL COLUMNS, TRUSSES, BEAMS, AND MISC. MEMBERS, TYP.
4. COORDINATE LOCATION OF KNOX-BOX W/AUTHORITIES HAVING JURISDICTION
5. FIRE EXTINGUISHER SHALL MEET ALL APPLICABLE ADA, NFPA, AND LOCALLY ADOPTED CODES.
6. ALL EXISTING SIDEWALKS ELEVATIONS SHALL BE FIELD VERIFIED PRIOR TO COMMENCEMENT OF CONSTRUCTION.
7. TYPICAL STARTING ELEVATION FOR CONCRETE PADS IS 1/2" BELOW ADJOINING FLOOR SLAB ELEVATION EXCEPT AT DOOR WHERE THE STARTING ELEVATION SHALL BE FLUSH AT FINISH FLOOR ELEVATION. SEE MINIMUM AND MAXIMUM SLOPES BELOW.
8. PROVIDE POSITIVE DRAINAGE TO ALL LOW POINTS TO PREVENT PONDING OF SURFACE RUN-OFF.
9. MINIMUM AND MAXIMUM SLOPES SHALL BE AS FOLLOWS:
   - ALL EXTERIOR SURFACES SHALL HAVE A MINIMUM 1/4" PER FOOT SLOPE TO PREVENT PONDING.
   - ALL SIDEWALK SLOPES SHALL NOT EXCEED 1:20.
   - ALL CURB CUTS AND RAMPS SHALL NOT EXCEED 1:12.

PLAN LEGEND

NEW CMU WALL CONSTRUCTION

NEW WALL CONSTRUCTION

DENOTES NEW CONCRETE SIDEWALK

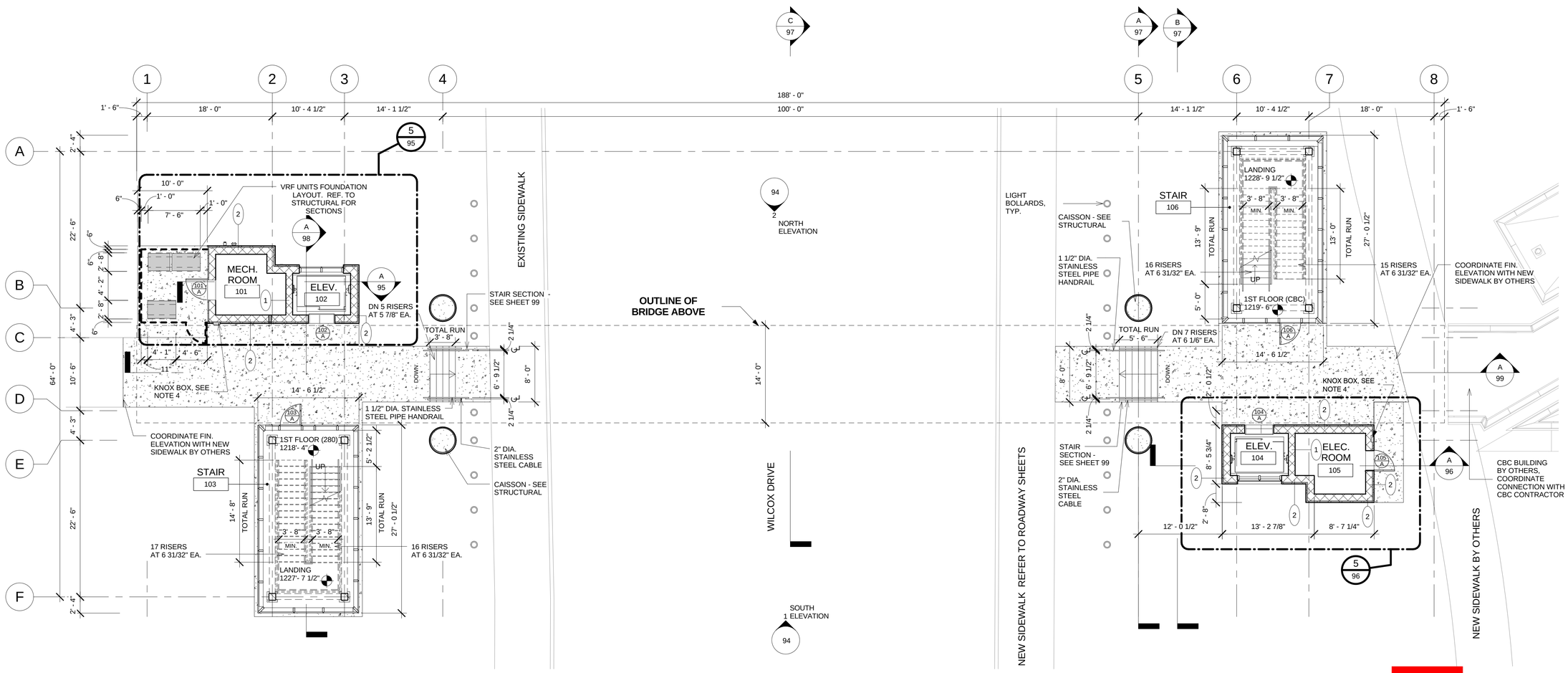

FLOOR PLAN - FIRST FLOOR

SCALE: 1/8" = 1'-0"

GRAPHIC SCALE 1/8" = 1'-0"

AREA = 3,844 SQFT

UNOFFICIAL SET

NOT FOR BIDDING

SEALED BY

DINEEN BOLLING WEST REGISTERED ARCHITECT AGRICULTURE COMMERCE No. 100987 STATE OF TENNESSEE

Cain Rash West Architects

Architectural Services
130 Regional Park Dr.
Kingsport, TN 37660
Phn (423) 349-7760
Fax (423) 349-7413
www.grcinc.com

STATE OF TENNESSEE
DEPARTMENT OF TRANSPORTATION

1ST FLOOR PLAN
PEDESTRIAN BRIDGE
OVER WILCOX DRIVE
BR. I.D. NO.
82SR1260017

U- 64 -155

plotted on: 6/19/2014 9:28:44 AM
SULLIVAN CO EASTMAN - PROJECT # 82085-3236-04 SHEET LABEL:

checked WEST
drawn DARNELL

6/19/2014 9:28:44 AM

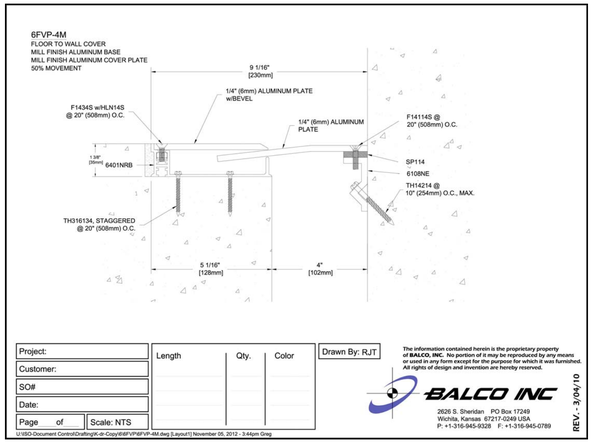

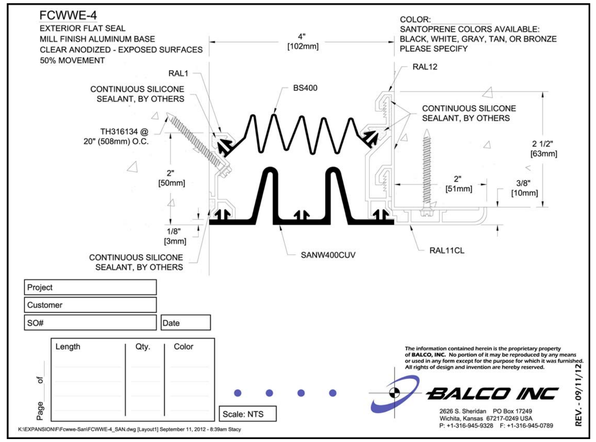

PLAN NOTES.

1. FOR GENERAL NOTES AND WALL TYPES SEE DRAWING SHEET 86.
2. DIMENSIONS FOR MECHANICAL, ELECTRICAL, AND ELEVATORS ARE TO FACE OF CMU.
3. SEE STRUCTURAL DRAWINGS FOR SIZES ON ALL COLUMNS, TRUSSES, BEAMS, AND MISC. MEMBERS, TYP.
4. COORDINATE LOCATION OF KNOX-BOX W/AUTHORITIES HAVING JURISDICTION
5. FIRE EXTINGUISHER SHALL MEET ALL APPLICABLE ADA, NFPA, AND LOCALLY ADOPTED CODES.
6. FIRE EXTINGUISHERS AND CABINETS SHALL BE MOUNTED SO THAT THE HIGHEST CONTROL AND/OR HANDLE DOES NOT EXCEED 48" A.F.F.
7. ALL EXISTING SIDEWALKS ELEVATIONS SHALL BE FIELD VERIFIED PRIOR TO COMMENCEMENT OF CONSTRUCTION.
8. TYPICAL STARTING ELEVATION FOR CONCRETE PADS IS 1/2" BELOW ADJOINING FLOOR SLAB ELEVATION EXCEPT AT DOOR WHERE THE STARTING ELEVATION SHALL BE FLUSH AT FINISH FLOOR ELEVATION. SEE MINIMUM AND MAXIMUM SLOPES BELOW.
9. PROVIDE POSITIVE DRAINAGE TO ALL LOW POINTS TO PREVENT PONDING OF SURFACE RUN-OFF.
10. MINIMUM AND MAXIMUM SLOPES SHALL BE AS FOLLOWS:
    - ALL EXTERIOR SURFACES SHALL HAVE A MINIMUM 1/4" PER FOOT SLOPE TO PREVENT PONDING.
    - ALL SIDEWALK SLOPES SHALL NOT EXCEED 1:20.
    - ALL CURB CUTS AND RAMPS SHALL NOT EXCEED 1:12.

PROJECT NO.	YEAR	SHEET NO.
STP - 126(19)	2014	91

REVISIONS

NO.	DATE	BY	DESCRIPTION

PLAN LEGEND.

NEW CMU WALL CONSTRUCTION

NEW WALL CONSTRUCTION

DENOTES NEW CONCRETE SIDEWALK

GENERAL NOTES :

- **6FVP-4M AND FCWWE-4 DETAILS ARE STANDARD DETAILS FROM BALCO INC AND ARE INTENDED TO ESTABLISH A STANDARD OF QUALITY. ONLY KEY DETAILS HAVE BEEN SELECTED. OTHER "ANCILLARY" DETAILS REQUIRED FOR COMPLETE SYSTEM MAY NOT BE SHOWN.**
- **OTHER MANUFACTURERS SUCH AS NYSTROM, EMSEAL, OR EQUAL (OR SUPERIOR) PRODUCTS BY ALTERNATE MANUFACTURERS MUST BE SUBMITTED AND APPROVED. DETERMINATION AS TO THE EQUALITY OF PROPOSED SUBSTITUTIONS SHALL BE MADE BY THE ARCHITECT & TDOT. FOR THE FINAL SELECTED PRODUCT, IT IS EXPECTED THAT THE CONTRACTOR COMPLY WITH ALL OF THE MANUFACTURER'S DETAILS FOR A WARRANTED PRODUCT.**

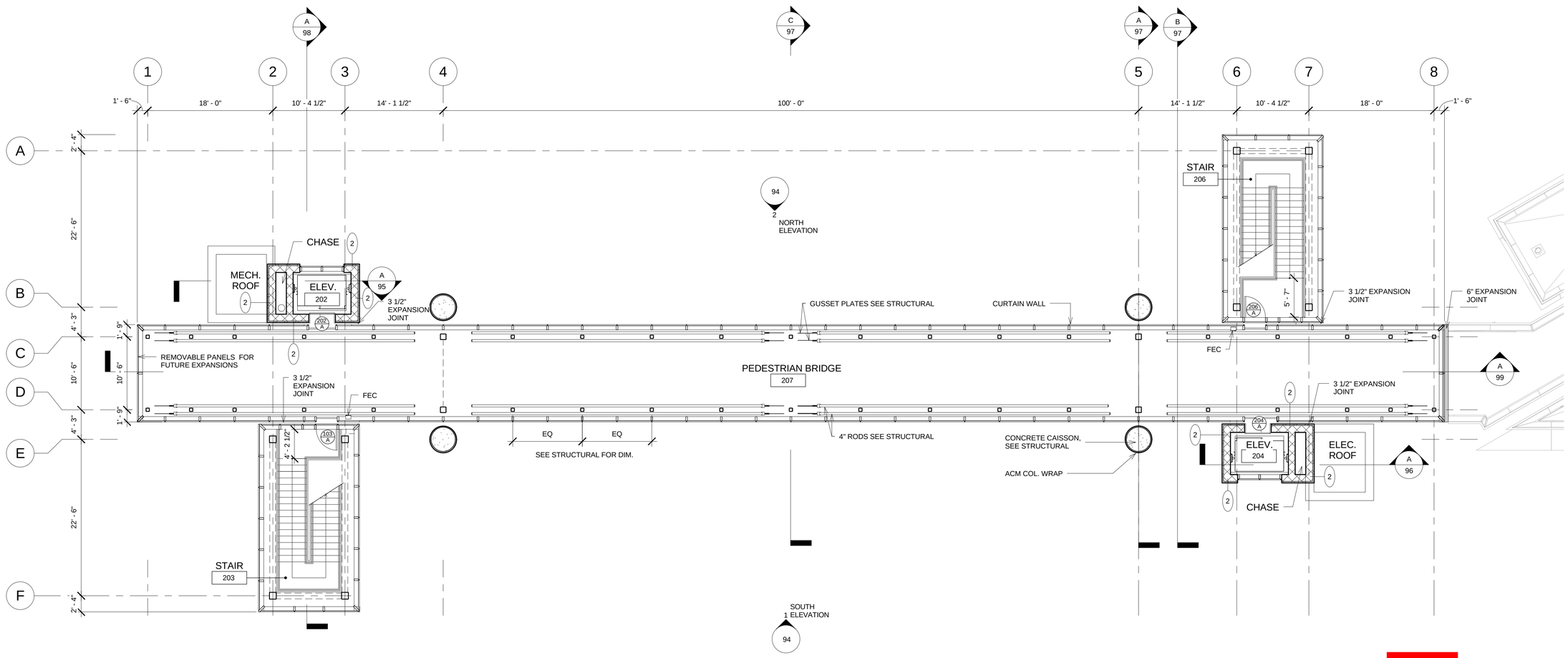

0' 5' 10' 15'
GRAPHIC SCALE
1/8" = 1'-0"

FLOOR PLAN - BRIDGE LEVEL

SCALE: 1/8" = 1'-0"

AREA = 3,844 SQFT

PLAN NORTH
TRUE NORTH

UNOFFICIAL SET

NOT FOR BIDDING

SEALED BY

DINEEN BOLLING WEST
REGISTERED ARCHITECT
AGRICULTURE
COMMERCE
No. 100987
STATE OF TENNESSEE
6-20-14

Cain Rash West
Architects

Architectural Services
130 Regional Park Dr.
Kingsport, TN 37660
Phn (423) 349-7760
Fax (423) 349-7413
www.grcinc.com

STATE OF TENNESSEE
DEPARTMENT OF TRANSPORTATION

BRIDGE FL. PLAN
PEDESTRIAN BRIDGE
OVER WILCOX DRIVE
BR. I.D. NO.
82SR1260017

U- 64 -156

6/19/2014 9:29:01 AM

checked WEST
drawn DARNELL

plotted on: 6/19/2014 9:29:01 AM
SULLIVAN CO EASTMAN - PROJECT # 82085-3236-04 SHEET LABEL:

PROJECT NO.	YEAR	SHEET NO.
STP - 126(19)	2014	92

REVISIONS

NO.	DATE	BY	DESCRIPTION

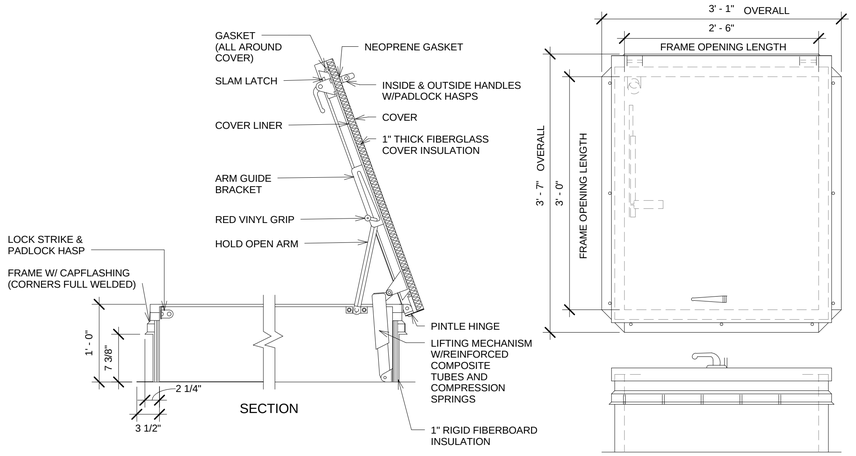

BILCO TYPE S-20

NOTE: OTHER MANUFACTUERERS: AES INDUSTRIES,INC. BABCOCK-DAVIS OR EQUIVALENT

B 92

ROOF SCUTTLE DETAIL

SCALE: 1" = 1'-0"

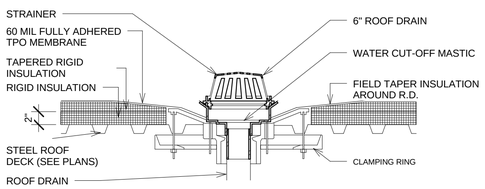

ROOF DRAIN NOTES:

1. ALL BOLTS OR CLAMPS MUST BE IN PLACE TO PROVIDE CONSTANT COMPRESSION ON WATER CUT-OFF MASTIC.
2. CUT THE MEMBRANE SO IT EXTENDS A MINIMUM OF 1/2" INCH FROM THE ATTACHMENT POINTS OF THE DRAIN CLAMPING RING.
3. HOLE THROUGH MEMBRANE MUST EXCEED SIZE OF DRAIN PIPE.
4. INSULATION TAPER SHALL NEW BE STEEPER THAN 6 INCHES (VERTICAL) IN 2 INCHES (HORIZONTAL).
5. 4" THICK INSULATION MIN.

A 92

ROOF DRAIN DETAIL

SCALE: 1" = 1'-0"

PROBEL

Pro-Bel Group Ltd.
65 Sunray Street
Whitby, Ontario, Canada L1N 8Y3

Toll Free: (800) 461-0575
Tel: (905)-427-0616
Fax: (905)-427-2545
Email: info@pro-belgroup.com

NOTES:
1. SYSTEM SHOWN BELOW IS FOR 1,000 lbs. WORKING LOAD.
2. ASSEMBLY SHOWN IS GROUND RIGGED DAVIT ARM TYPE A100 (SHORT SERIES), 600 WELDMENT DAVIT BASE w/ U-BAR, AND 200 SERIES ADAPTOR.

IMPORTANT:
1. DAVITS ARE DESIGNED TO A TYPICAL SUSPENSION LOAD OF 1,000 lbs. (4.5 KN), WITH A FACTOR OF SAFETY OF 4 AGAINST FRACTURE OR DETACHMENT.

2. IT IS THE RESPONSIBILITY OF THE STRUCTURAL ENGINEER FOR THE OVERALL PROJECT TO ENSURE THAT THE STRUCTURE ON WHICH THE SAFETY EQUIPMENT BY PRO-BEL IS INSTALLED, IS REINFORCED TO WITHSTAND THE LOADS INDICATED ON THIS DRAWING.

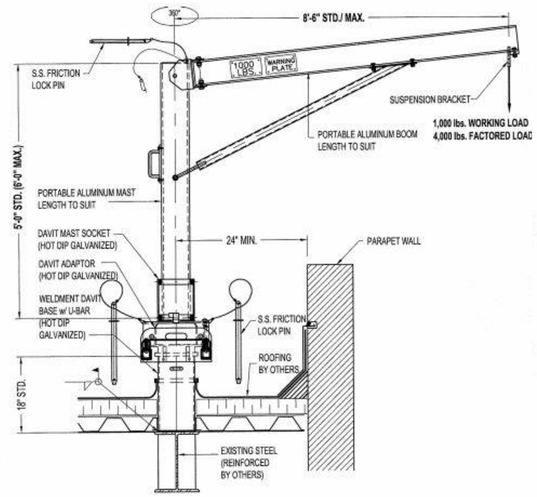

A-D16(U)5-8S: DAVIT ASSEMBLY A100 ARM - SHORT SERIES w/ 600 BASE (c/w U-BAR) - WELDMENT

PROBEL

Pro-Bel Group Ltd.
65 Sunray Street
Whitby, Ontario, Canada L1N 8Y3

Toll Free: (800) 461-0575
Tel: (905)-427-0616
Fax: (905)-427-2545
Email: info@pro-belgroup.com

NOTES:
1. 8'-6" MAX. REACH WITH 1,000 lbs. WORKING LOAD.
2. DAVIT BASE ASSEMBLY SHOWN AS WELDED TO EXISTING STEEL STRUCTURE.
3. ASSEMBLY SHOWN IS STANDARD 18" & 24" HIGH MODELS.
4. BASE PLATE REQUIRED WHEN BEAM WIDTH IS LESS THAN 9 1/4".
5. ASSEMBLY SHOWN CAN BE USED WITH 200 & 500 SERIES ADAPTOR FOR ALL TYPE OF DAVIT ARMS.

IMPORTANT:
1. DAVIT BASES ARE DESIGNED TO A TYPICAL SUSPENSION LOAD OF 1,000 lbs. (4.5 KN), WITH A FACTOR OF SAFETY OF 4 AGAINST FRACTURE OR DETACHMENT.

2. IT IS THE RESPONSIBILITY OF THE STRUCTURAL ENGINEER FOR THE OVERALL PROJECT TO ENSURE THAT THE STRUCTURE ON WHICH THE SAFETY EQUIPMENT BY PRO-BEL IS INSTALLED, IS REINFORCED TO WITHSTAND THE LOADS INDICATED ON THIS DRAWING.

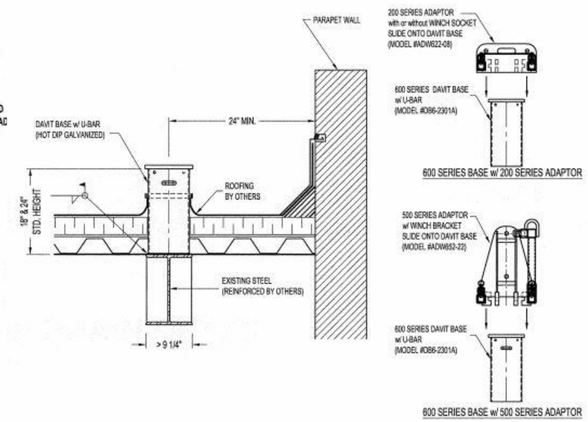

DB6-2301A: 600 SERIES DAVIT BASE (WELDMENT) - WITH U-BAR

GENERAL NOTES :

- DETAILS A-D16(U)5-8S & DB6-2301A ARE STANDARD DETAILS FROM PROBEL AND ARE INTENDED TO ESTABLISH A STANDARD OF QUALITY. ONLY KEY DETAILS HAVE BEEN SELECTED. OTHER "ANCILLARY" DETAILS REQUIRED FOR COMPLETE SYSTEM MAY NOT BE SHOWN.

- OTHER MANUFACTURERS SUCH AS JP OBELISH INC,WINSAGE, OR EQUAL (OR SUPERIOR) PRODUCTS BY ALTERNATE MANUFACTURERS MUST BE SUBMITTED AND APPROVED. DETERMINATION AS TO THE EQUALITY OF PROPOSED SUBSTITUTIONS SHALL BE MADE BY THE ARCHITECT & TDOT. FOR THE FINAL SELECTED PRODUCT, IT IS EXPECTED THAT THE CONTRACTOR COMPLY WITH ALL OF THE MANUFACTURER'S DETAILS FOR A WARRANTED PRODUCT.

ROOF NOTES

1. REFER TO ELEVATIONS & SECTIONS FOR BEARING & PARAPET HEIGHTS
2. IT IS THE CONTRACTOR'S RESPONSIBILITY TO ENSURE THAT THE ROOF STRUCTURE IS NOT OVERLOADED BY WEIGHTS OF CONSTRUCTION EQUIPMENT, MATERIALS, AND PERSONNEL DURING CONSTRUCTION.
3. ROUTE ALL ROOF DRAINS (RD.) INTO STORMWATER .REFER TO ROW UTILITIES PLAN FOR STORM SEWER LINE
4. REFER TO SPECIFICATIONS FOR ROOFING MEMBRANE AND ROOF INSULATION.
5. COORDINATE WITH CBC BUILDING CONTRACTOR FOR ROOF BRIDGE CONNECTION TO THE STRUCTURE.

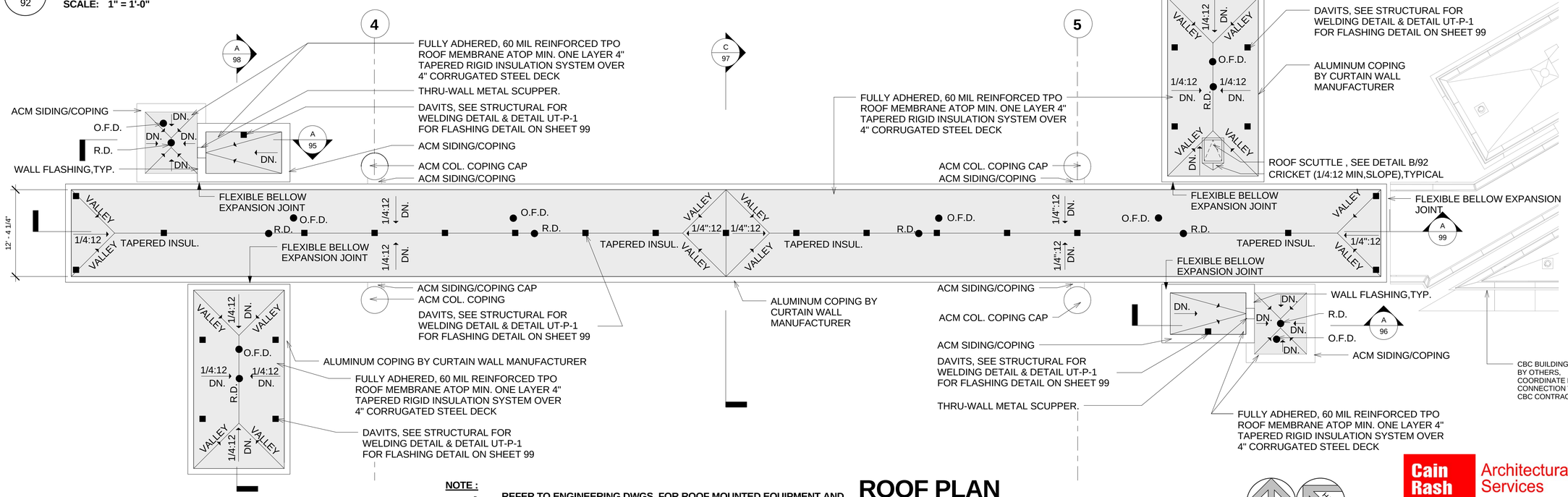

NOTE :

- REFER TO ENGINEERING DWGS. FOR ROOF MOUNTED EQUIPMENT AND ROOF PENETRATIONS WHICH MAY NOT BE SHOWN ON THIS PLAN.

ROOF PLAN

SCALE: 1/8" = 1'-0"

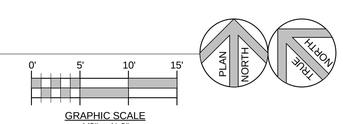

UNOFFICIAL SET

NOT FOR BIDDING

SEALED BY

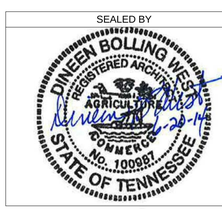

Cain Rash West
Architects

Architectural Services
130 Regional Park Dr.
Kingsport, TN 37660
Phn (423) 349-7760
Fax (423) 349-7413
www.grcinc.com

STATE OF TENNESSEE

DEPARTMENT OF TRANSPORTATION

ROOF PLAN
PEDESTRIAN BRIDGE OVER WILCOX DRIVE
BR. I.D. NO. 82SR1260017

U- 64 -157

6/19/2014 9:29:25 AM

checked	WEST
drawn	DARNELL

plotted on: 6/19/2014 9:29:25 AM
SULLIVAN CO EASTMAN - PROJECT # 82085-3236-04 SHEET LABEL:

PROJECT NO.	YEAR	SHEET NO.
STP - 126(19)	2014	93

REVISIONS

NO.	DATE	BY	DESCRIPTION
1	7/15/14	DARNELL	MANUF. ADDED TO GEN. NOTES

GENERAL NOTES :

- DETAIL D-12 IS A STANDARD DETAIL FROM PIONEER CLADDING & GLAZING AND IS INTENDED TO ESTABLISH A STANDARD OF QUALITY. ONLY KEY DETAILS HAVE BEEN SELECTED. OTHER "ANCILLARY" DETAILS REQUIRED FOR COMPLETE SYSTEM MAY NOT BE SHOWN.

- OTHER MANUFACTURERS SUCH AS SOTA GLAZING INC, RAICO, OR EQUAL (OR SUPERIOR) PRODUCTS BY ALTERNATE MANUFACTURERS MUST BE SUBMITTED AND APPROVED. DETERMINATION AS TO THE EQUALITY OF PROPOSED SUBSTITUTIONS SHALL BE MADE BY THE ARCHITECT & TDOT . FOR THE FINAL SELECTED PRODUCT, IT IS EXPECTED THAT THE CONTRACTOR COMPLY WITH ALL OF THE MANUFACTURER'S DETAILS FOR A WARRANTED PRODUCT.

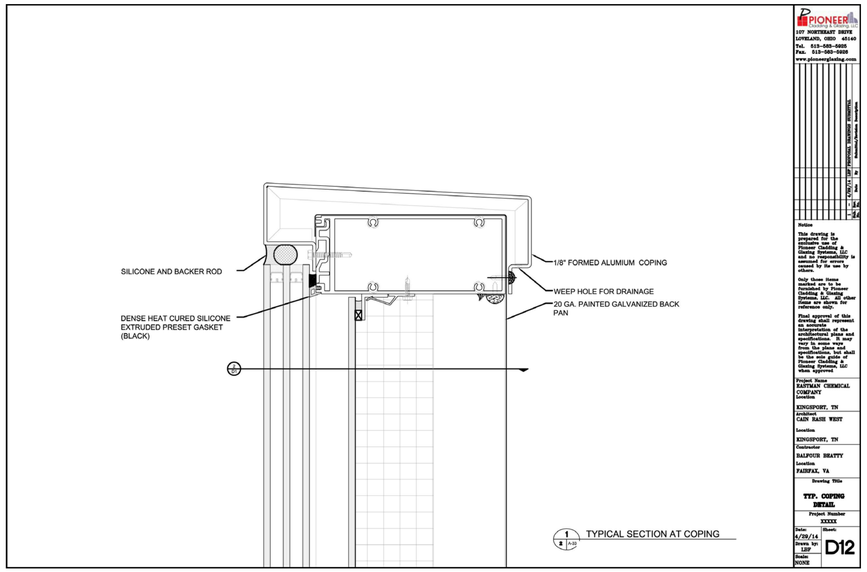

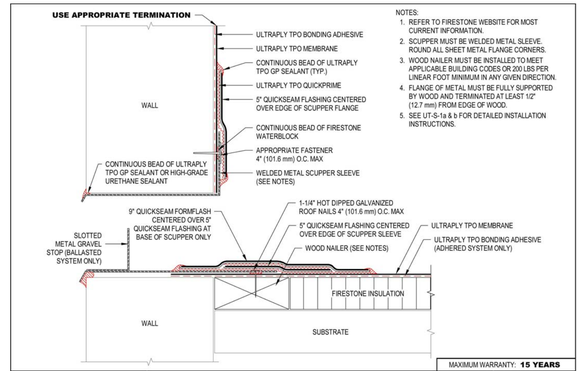

NOTES:
1. REFER TO FIRESTONE WEBSITE FOR MOST CURRENT INFORMATION.
2. SCUPPER MUST BE WELDED METAL SLEEVE. ROUND ALL SHEET METAL FLANGE CORNERS.
3. WOOD NAILER MUST BE INSTALLED TO MEET APPLICABLE BUILDING CODES OR 200 LBS PER LINEAR FOOT MINIMUM IN ANY GIVEN DIRECTION.
4. FLANGE OF METAL MUST BE FULLY SUPPORTED BY WOOD AND TERMINATED AT LEAST 1/2" (12.7 mm) FROM EDGE OF WOOD.
5. SEE UT-S-1a & b FOR DETAILED INSTALLATION INSTRUCTIONS.

MAXIMUM WARRANTY: **15 YEARS**

Firestone BUILDING PRODUCTS NOBODY COVERS YOU BETTER.™ www.firestonebpco.com | THRU-WALL SCUPPER (WELDED SLEEVE) | ULTRAPLY™ TPO | ACCEPTABLE SYSTEMS: ALL | ISSUE / REVISION DATE: 1/1/2006 | NOT TO SCALE | DETAIL NO. UT-S-1

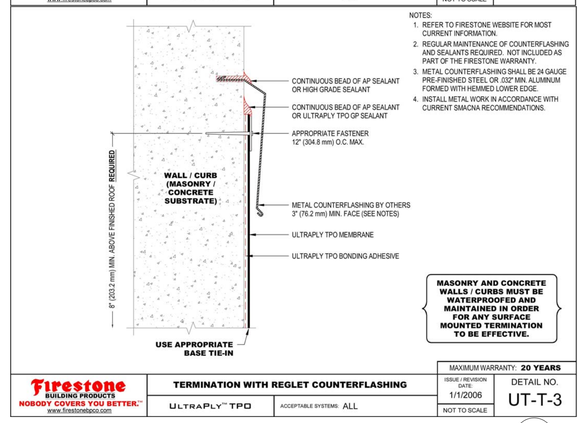

NOTES:
1. REFER TO FIRESTONE WEBSITE FOR MOST CURRENT INFORMATION.
2. REGULAR MAINTENANCE OF COUNTERFLASHING AND SEALANTS REQUIRED. NOT INCLUDED AS PART OF THE FIRESTONE WARRANTY.
3. METAL COUNTERFLASHING SHALL BE 24 GAUGE PRE-FINISHED STEEL OR .032" MIN. ALUMINUM FORMED WITH HEMMED LOWER EDGE.
4. INSTALL METAL WORK IN ACCORDANCE WITH CURRENT SMACNA RECOMMENDATIONS.

MAXIMUM WARRANTY: **20 YEARS**

Firestone BUILDING PRODUCTS NOBODY COVERS YOU BETTER.™ www.firestonebpco.com | TERMINATION WITH REGLET COUNTERFLASHING | ULTRAPLY™ TPO | ACCEPTABLE SYSTEMS: ALL | ISSUE / REVISION DATE: 1/1/2006 | NOT TO SCALE | DETAIL NO. UT-T-3

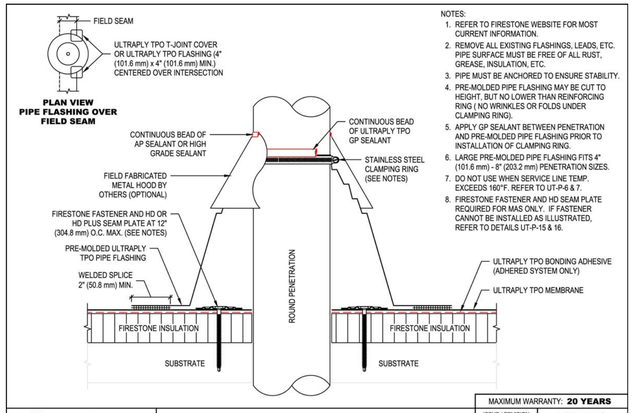

NOTES:
1. REFER TO FIRESTONE WEBSITE FOR MOST CURRENT INFORMATION.
2. REMOVE ALL EXISTING FLASHINGS, LEADS, ETC. PIPE SURFACE MUST BE FREE OF ALL RUST, GREASE, INSULATION, ETC.
3. PIPE MUST BE ANCHORED TO ENSURE STABILITY.
4. PRE-MOLDED PIPE FLASHING MAY BE CUT TO HEIGHT, BUT NO LOWER THAN REINFORCING RING (NO WRINKLES OR FOLDS UNDER CLAMPING RING).
5. APPLY GP SEALANT BETWEEN PENETRATION AND PRE-MOLDED PIPE FLASHING PRIOR TO INSTALLATION OF CLAMPING RING.
6. LARGE PRE-MOLDED PIPE FLASHING FITS 4" (101.6 mm) - 8" (203.2 mm) PENETRATION SIZES.
7. DO NOT USE WHEN SERVICE LINE TEMP. EXCEEDS 160°F. REFER TO UT-P-6 & 7.
8. FIRESTONE FASTENER AND HD SEAM PLATE REQUIRED FOR MAS ONLY. IF FASTENER CANNOT BE INSTALLED AS ILLUSTRATED, REFER TO DETAILS UT-P-15 & 16.

MAXIMUM WARRANTY: **20 YEARS**

Firestone BUILDING PRODUCTS NOBODY COVERS YOU BETTER.™ www.firestonebpco.com | PENETRATION WITH ULTRAPLY TPO LARGE PIPE FLASHING | ULTRAPLY™ TPO | ACCEPTABLE SYSTEMS: ALL | ISSUE / REVISION DATE: 10/25/2010 | NOT TO SCALE | DETAIL NO. UT-P-1

GENERAL NOTES :

- UT-T-3, UT-S-1, & UT-P-1 DETAILS ARE STANDARD DETAILS FROM FIRESTONE CORPORATION AND ARE INTENDED TO ESTABLISH A STANDARD OF QUALITY. ONLY KEY DETAILS HAVE BEEN SELECTED. OTHER "ANCILLARY" DETAILS REQUIRED FOR COMPLETE SYSTEM MAY NOT BE SHOWN.

- SPECIFIC PRODUCTS (COPING, GUTTER, ETC.) LISTED IN THESE PLANS AND/OR THE SPECIFICATIONS SHALL TAKE PRECEDENCE OVER THE PRODUCTS LISTED IN THE MANUFACTURER'S STANDARD DETAILS.

- OTHER MANUFACTURERE SUCH AS CARLISLE SYNTEC INCORPORATED, FLEX ROOFING SYSTEMS, GAF COMMERCIAL ROOFING OR EQUAL (OR SUPERIOR) PRODUCTS BY ALTERNATE MANUFACTURERS MUST BE SUBMITTED AND APPROVED. DETERMINATION AS TO THE EQUALITY OF PROPOSED SUBSTITUTIONS SHALL BE MADE BY THE ARCHITECT & TDOT. FOR THE FINAL SELECTED PRODUCT, IT IS EXPECTED THAT THE CONTRACTOR COMPLY WITH ALL OF THE MANUFACTURER'S DETAILS FOR A WARRANTED PRODUCT.

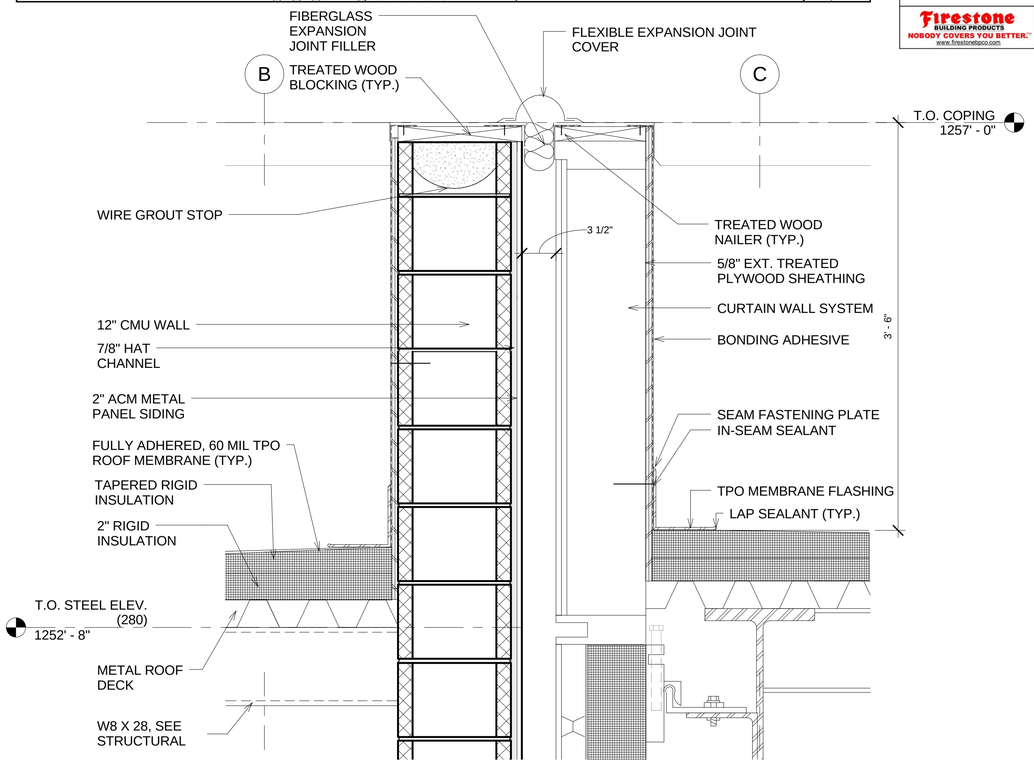

2 / 93 EXPANSION JOINT DETAIL- B

SCALE: 1 1/2" = 1'-0"

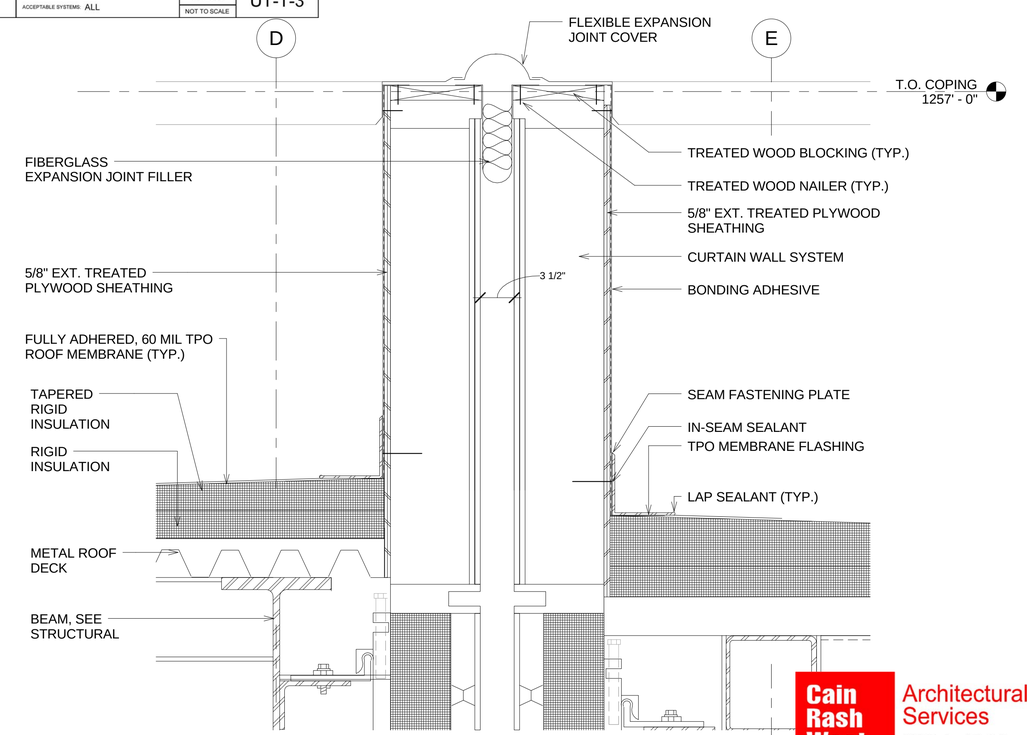

1 / 93 EXPANSION JOINT DETAIL - A

SCALE: 1 1/2" = 1'-0"

UNOFFICIAL SET

NOT FOR BIDDING

SEALED BY

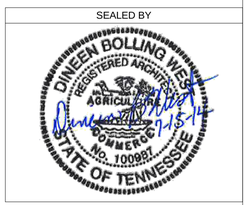

STATE OF TENNESSEE

DEPARTMENT OF TRANSPORTATION

ROOF DETAILS
PEDESTRIAN BRIDGE
OVER WILCOX DRIVE
BR. I.D. NO.
82SR1260017

U- 64 -158

Cain Rash West Architects
Architectural Services
130 Regional Park Dr.
Kingsport, TN 37660
Phn (423) 349-7760
Fax (423) 349-7413
www.grcinc.com

checked WEST
drawn DARNELL

plotted on: 8/19/2014 2:58:21 PM
SULLIVAN CO EASTMAN - PROJECT # 82085-3236-04
SHEET LABEL:

8/19/2014 2:58:21 PM

PROJECT NO.	YEAR	SHEET NO.
STP - 126(19)	2014	94

REVISIONS

NO.	DATE	BY	DESCRIPTION

ELEVATION NOTES

1. SEE SITE PLAN LAYOUT AND FLOOR PLANS FOR ADDITIONAL LOCATIONS, DIMENSIONS AND ELEVATIONS PERTAINING TO SIDEWALKS AND EXTERIOR CONCRETE PADS.
2. SEE SECTIONS FOR FLOOR ELEVATIONS, BEARING HEIGHTS, ETC. SEE SCHEDULES FOR DOOR HEIGHTS AND DIMENSIONS.
3. ACM PANEL REVEALS SHALL BE 3/4" AND LOCATED AS INDICATED ON THE ELEVATIONS. COORDINATE WITH PLANS FOR ADDITIONAL BUILDING DIMENSIONS INCLUDING DOORS LOCATIONS.
4. SEE SPECS FOR ELEVATOR INFORMATION. PROJECT'S BASIS OF DESIGN IS THYSSENKRUPP ENDURA MRL2500 MACHINELESS ROOM WITH GLASS BACK PANEL OR EQUAL. COORDINATE W/ MANUFACTURER'S SPECIFICATIONS FOR ELEVATOR DOOR ROUGH OPENING. VERIFY MANUFACTURER'S SHAFT DIMENSIONS AND REPORT ANY DISCREPANCIES TO THE ARCHITECT. ELEVATOR SHOP DRAWINGS TO BE SUBMITTED AND APPROVED PRIOR TO ELEVATOR SHAFT CONSTRUCTION. SEE FINISH PLANS FOR IMPORTANT FLOOR FINISH INFORMATION.
5. ALL EXTERIOR CMU WILL BE FURRED OUT WITH ACM PANELS.

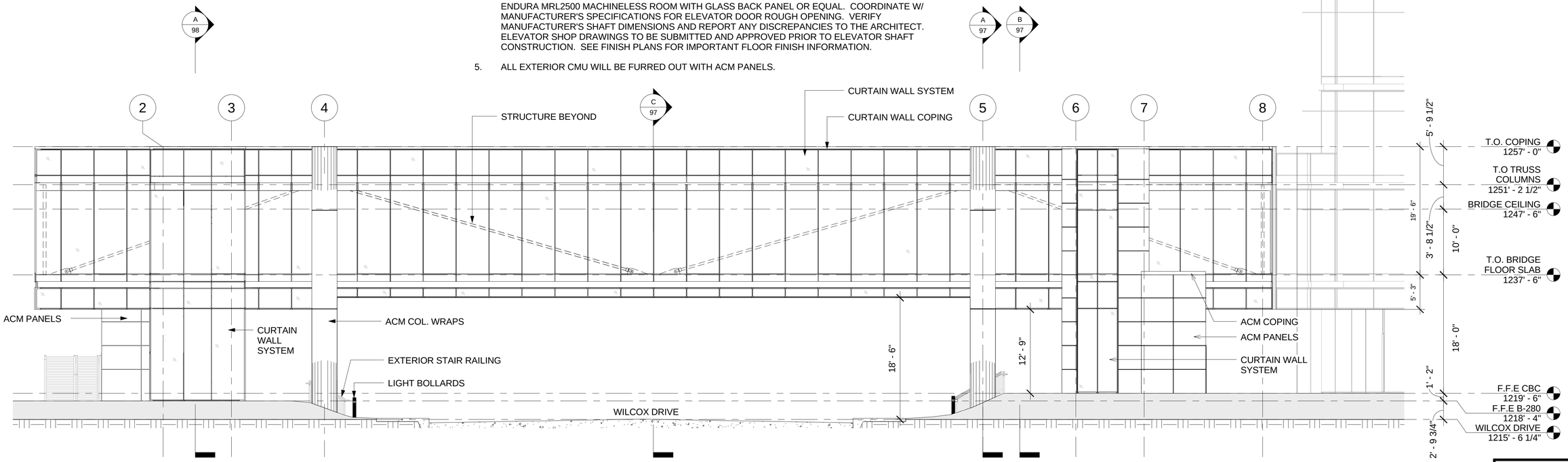

1 / 94 SOUTH ELEVATION

SCALE: 1/8" = 1'-0"

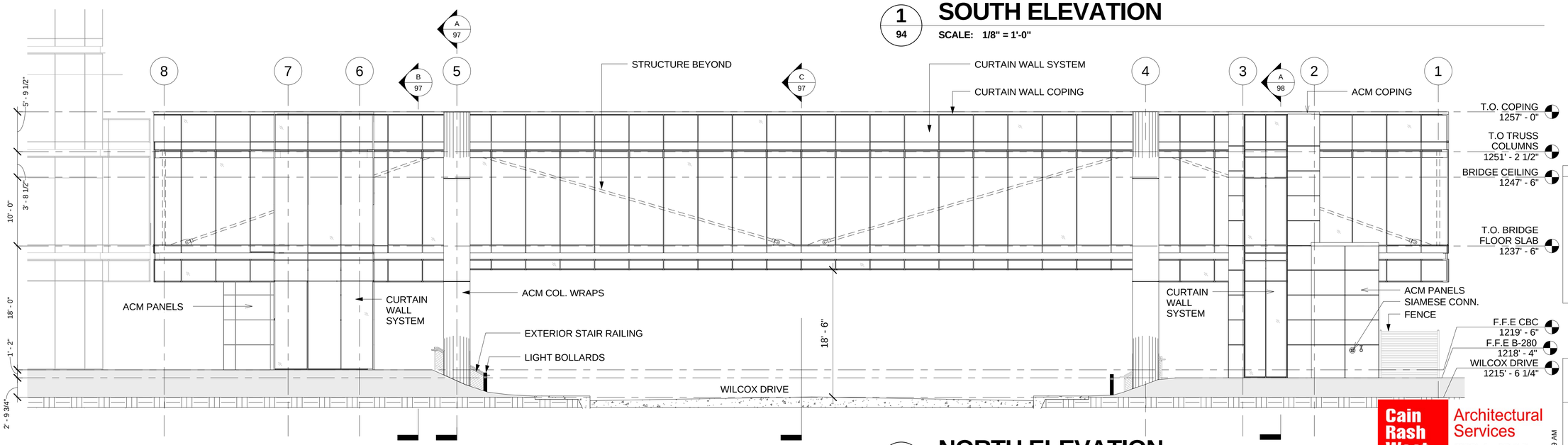

2 / 94 NORTH ELEVATION

SCALE: 1/8" = 1'-0"

UNOFFICIAL SET

NOT FOR BIDDING

SEALED BY

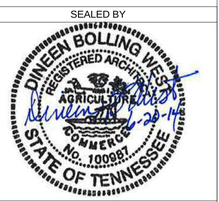

STATE OF TENNESSEE

DEPARTMENT OF TRANSPORTATION

BRIDGE ELEVATION
PEDESTRIAN BRIDGE
OVER WILCOX DRIVE
BR. I.D. NO.
82SR1260017

Cain Rash West
Architects

Architectural Services
130 Regional Park Dr.
Kingsport, TN 37660
Phn (423) 349-7760
Fax (423) 349-7413
www.grcinc.com

checked	WEST
drawn	DARNELL

plotted on: 6/19/2014 9:29:49 AM

SULLIVAN CO EASTMAN - PROJECT # 82085-3236-04 SHEET LABEL:

6/19/2014 9:29:49 AM

PROJECT NO.	YEAR	SHEET NO.
STP - 126(19)	2014	95

REVISIONS

NO.	DATE	BY	DESCRIPTION

ELEVATION NOTES

1. SEE SITE PLAN LAYOUT AND FLOOR PLANS FOR ADDITIONAL LOCATIONS, DIMENSIONS AND ELEVATIONS PERTAINING TO SIDEWALKS AND EXTERIOR CONCRETE PADS.
2. SEE SECTIONS FOR FLOOR ELEVATIONS, BEARING HEIGHTS, ETC. SEE SCHEDULES FOR DOOR HEIGHTS AND DIMENSIONS.
3. ACM PANEL REVEALS SHALL BE 3/4" AND LOCATED AS INDICATED ON THE ELEVATIONS. COORDINATE WITH PLANS FOR ADDITIONAL BUILDING DIMENSIONS INCLUDING DOORS LOCATIONS.
4. SEE SPECS FOR ELEVATOR INFORMATION. PROJECT'S BASIS OF DESIGN IS THYSSENKRUPP ENDURA MRL2500 MACHINELESS ROOM WITH GLASS BACK PANEL OR EQUAL. COORDINATE W/ MANUFACTURER'S SPECIFICATIONS FOR ELEVATOR DOOR ROUGH OPENING. VERIFY MANUFACTURER'S SHAFT DIMENSIONS AND REPORT ANY DISCREPANCIES TO THE ARCHITECT. ELEVATOR SHOP DRAWINGS TO BE SUBMITTED AND APPROVED PRIOR TO ELEVATOR SHAFT CONSTRUCTION. SEE FINISH PLANS FOR IMPORTANT FLOOR FINISH INFORMATION.
5. ALL EXTERIOR CMU WILL BE FURRED OUT WITH ACM PANELS.

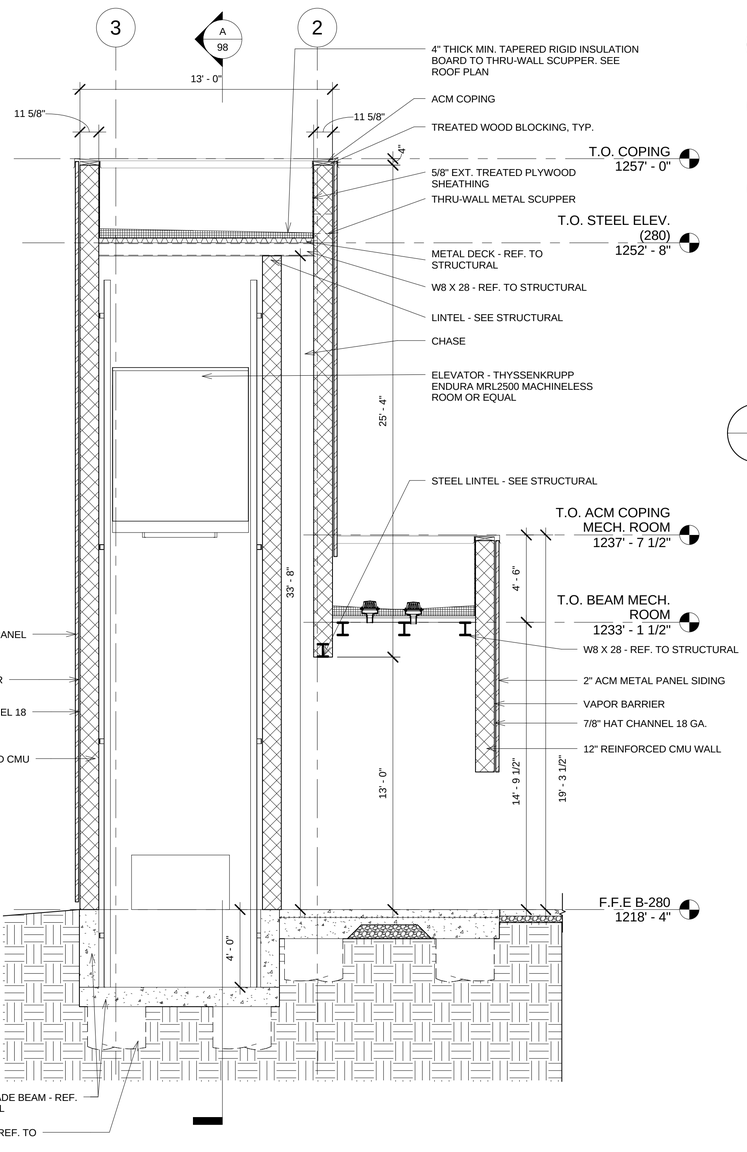

A / 95 ELEV. & MECH. ROOM 280 SECTION

SCALE: 1/4" = 1'-0"

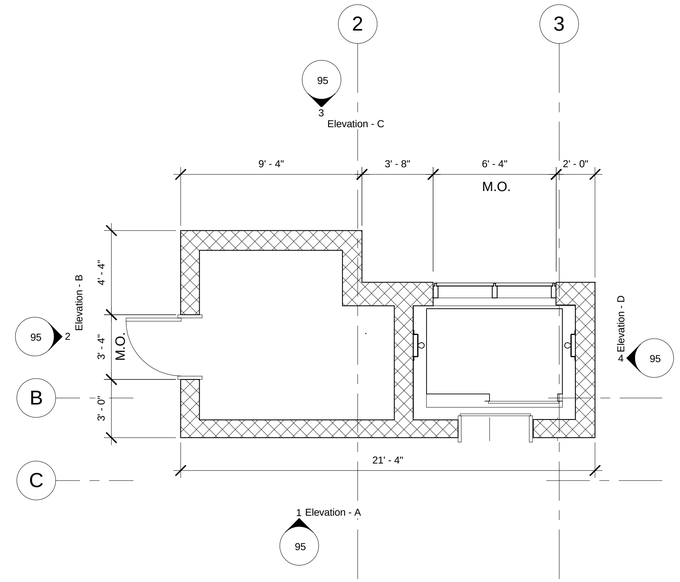

5 / 95 FLOOR PLAN - FIRST FLOOR (MECH. & ELEVATOR 280)

SCALE: 1/4" = 1'-0"

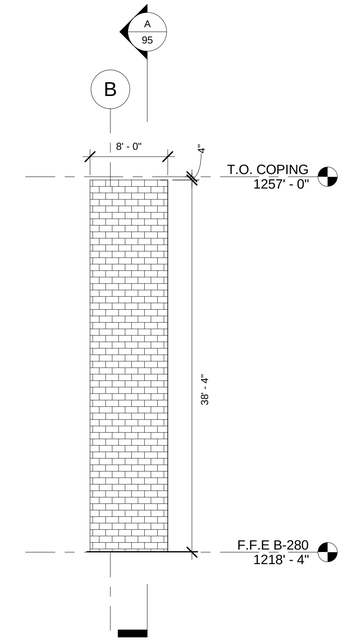

4 / 95 Elevation - D

SCALE: 1/8" = 1'-0"

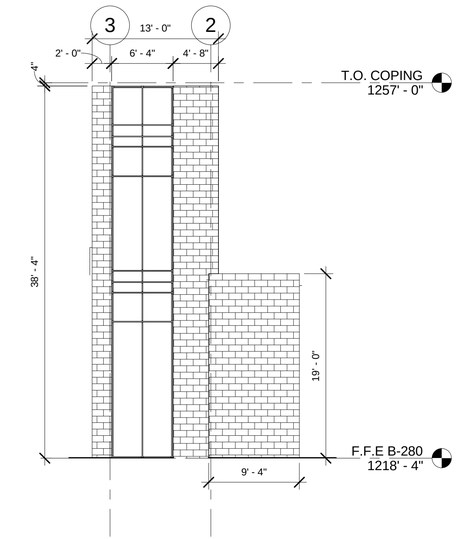

3 / 95 Elevation - C

SCALE: 1/8" = 1'-0"

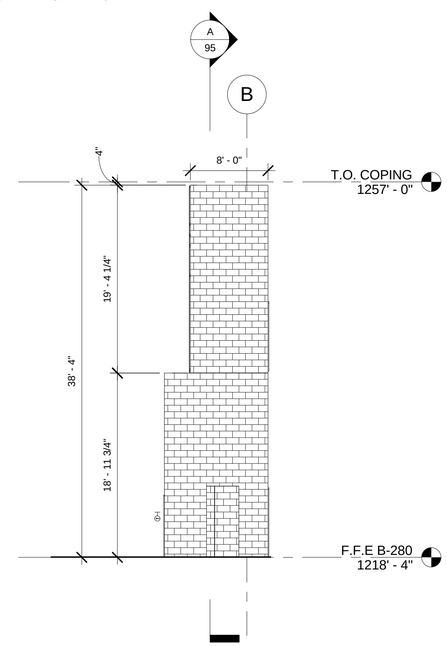

2 / 95 Elevation - B

SCALE: 1/8" = 1'-0"

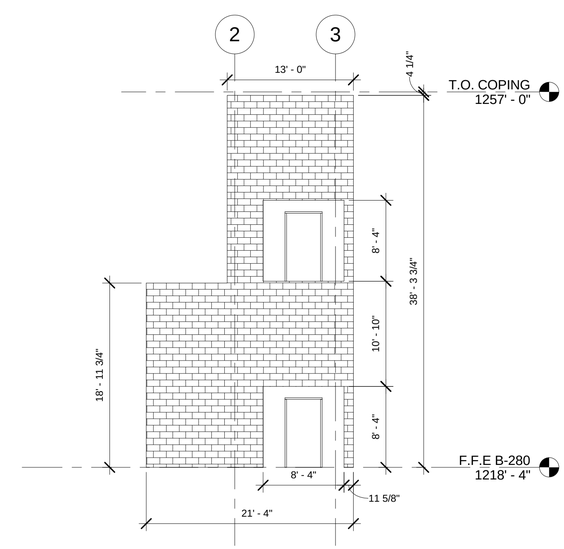

1 / 95 Elevation - A

SCALE: 1/8" = 1'-0"

UNOFFICIAL SET

NOT FOR BIDDING

SEALED BY

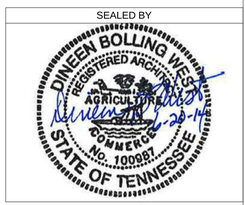

Cain Rash West
Architects

Architectural Services
130 Regional Park Dr.
Kingsport, TN 37660
Phn (423) 349-7760
Fax (423) 349-7413
www.grcinc.com

STATE OF TENNESSEE
DEPARTMENT OF TRANSPORTATION

CMU ELEV. 280
PEDESTRIAN BRIDGE
OVER WILCOX DRIVE
BR. I.D. NO.
82SR1260017

U- 64 -160

checked WEST
drawn DARNELL

plotted on: 6/19/2014 9:29:57 AM
SULLIVAN CO EASTMAN - PROJECT # 82065-3236-04 SHEET LABEL:

6/19/2014 9:29:57 AM

PROJECT NO.	YEAR	SHEET NO.
STP - 126(19)	2014	96

REVISIONS

NO.	DATE	BY	DESCRIPTION

ELEVATION NOTES

1. SEE SITE PLAN LAYOUT AND FLOOR PLANS FOR ADDITIONAL LOCATIONS, DIMENSIONS AND ELEVATIONS PERTAINING TO SIDEWALKS AND EXTERIOR CONCRETE PADS.
2. SEE SECTIONS FOR FLOOR ELEVATIONS, BEARING HEIGHTS, ETC. SEE SCHEDULES FOR DOOR HEIGHTS AND DIMENSIONS.
3. ACM PANEL REVEALS SHALL BE 3/4" AND LOCATED AS INDICATED ON THE ELEVATIONS. COORDINATE WITH PLANS FOR ADDITIONAL BUILDING DIMENSIONS INCLUDING DOORS LOCATIONS.
4. SEE SPECS FOR ELEVATOR INFORMATION. PROJECT'S BASIS OF DESIGN IS THYSSENKRUPP ENDURA MRL2500 MACHINELESS ROOM WITH GLASS BACK PANEL OR EQUAL. COORDINATE W/ MANUFACTURER'S SPECIFICATIONS FOR ELEVATOR DOOR ROUGH OPENING. VERIFY MANUFACTURER'S SHAFT DIMENSIONS AND REPORT ANY DISCREPANCIES TO THE ARCHITECT. ELEVATOR SHOP DRAWINGS TO BE SUBMITTED AND APPROVED PRIOR TO ELEVATOR SHAFT CONSTRUCTION. SEE FINISH PLANS FOR IMPORTANT FLOOR FINISH INFORMATION.
5. ALL EXTERIOR CMU WILL BE FURRED OUT WITH ACM PANELS.

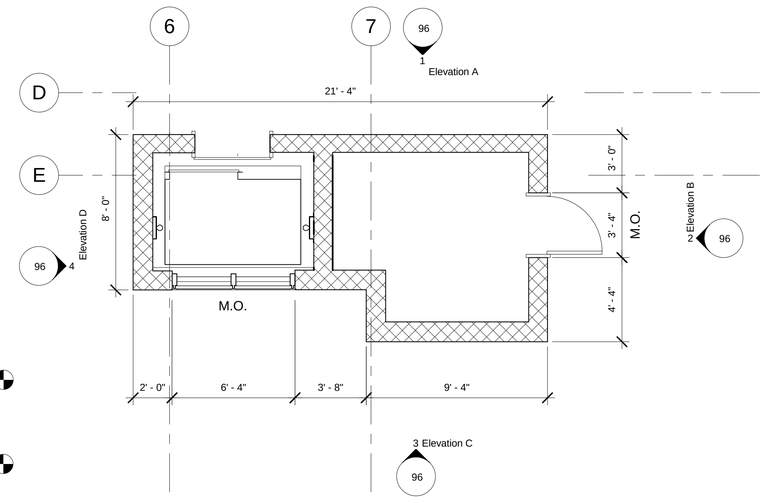

FLOOR PLAN - FIRST FLOOR (ELEC. & ELEVATOR CBC)

5 / 96 SCALE: 1/4" = 1'-0"

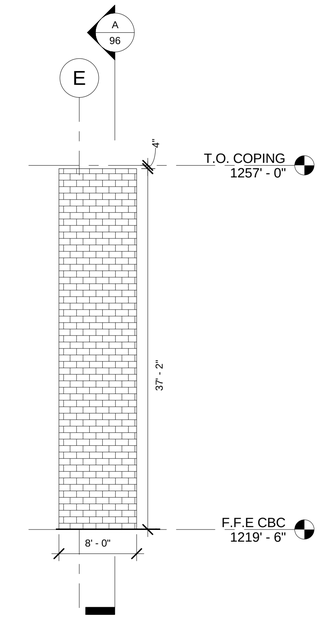

Elevation D

4 / 96 SCALE: 1/8" = 1'-0"

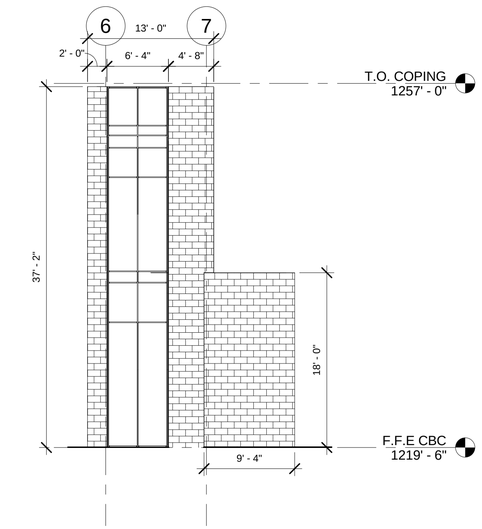

Elevation C

3 / 96 SCALE: 1/8" = 1'-0"

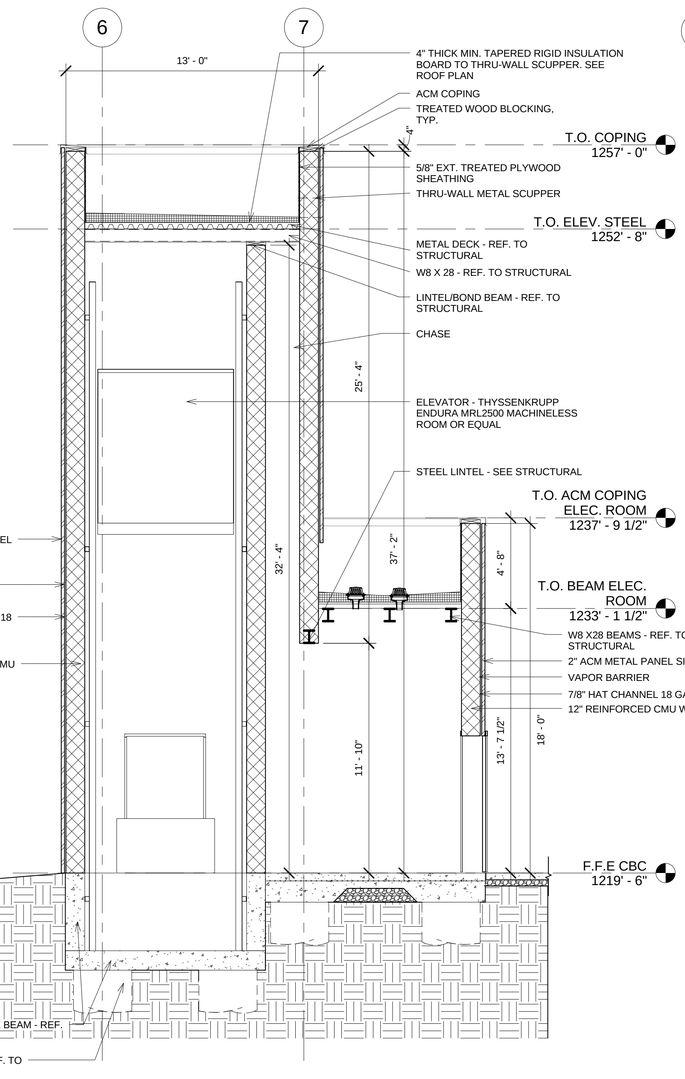

ELEV. & ELEC. ROOM CBC SECTION

A / 96 SCALE: 1/4" = 1'-0"

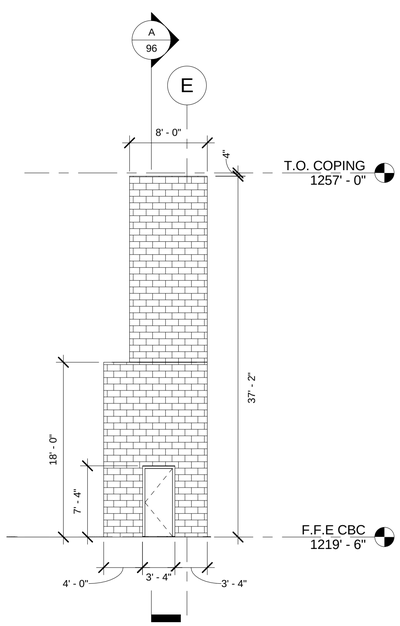

Elevation B

2 / 96 SCALE: 1/8" = 1'-0"

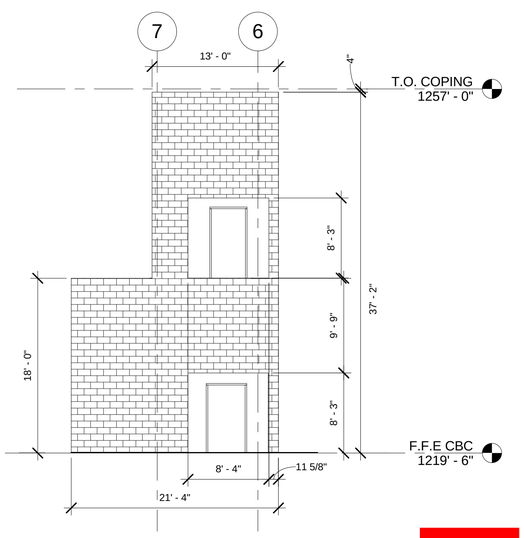

Elevation A

1 / 96 SCALE: 1/8" = 1'-0"

UNOFFICIAL SET

NOT FOR BIDDING

SEALED BY

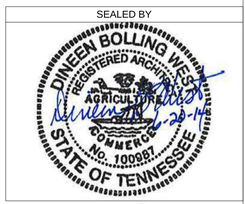

Cain Rash West
Architects

Architectural Services
130 Regional Park Dr.
Kingsport, TN 37660
Phn (423) 349-7760
Fax (423) 349-7413
www.grcinc.com

STATE OF TENNESSEE
DEPARTMENT OF TRANSPORTATION

CMU ELEV. CBC PEDESTRIAN BRIDGE OVER WILCOX DRIVE
BR. I.D. NO. 82SR1260017

U- 64 -161

checked	WEST
drawn	DARNELL

plotted on: 6/19/2014 9:30:05 AM
SULLIVAN CO EASTMAN - PROJECT # 82085-3236-04 SHEET LABEL:

6/19/2014 9:30:05 AM

PROJECT NO.	YEAR	SHEET NO.
STP - 126(19)	2014	97

REVISIONS

NO.	DATE	BY	DESCRIPTION

SECTION NOTES

1. FOR GENERAL NOTES, SEE SHEET 86.
2. SEE SITE PLAN LAYOUT AND FLOOR PLANS FOR ADDITIONAL LOCATIONS, DIMENSIONS AND ELEVATIONS PERTAINING TO SIDEWALKS, EXTERIOR RAMPS AND STEPS, AND EXTERIOR CONCRETE PADS
3. SEE SCHEDULES FOR WINDOW & DOOR HEIGHTS AND DIMENSIONS.
4. REFER TO ROOF PLAN DETAILS FOR FLASHING REQUIREMENTS NOT OTHERWISE SHOWN ON THESE SECTIONS.

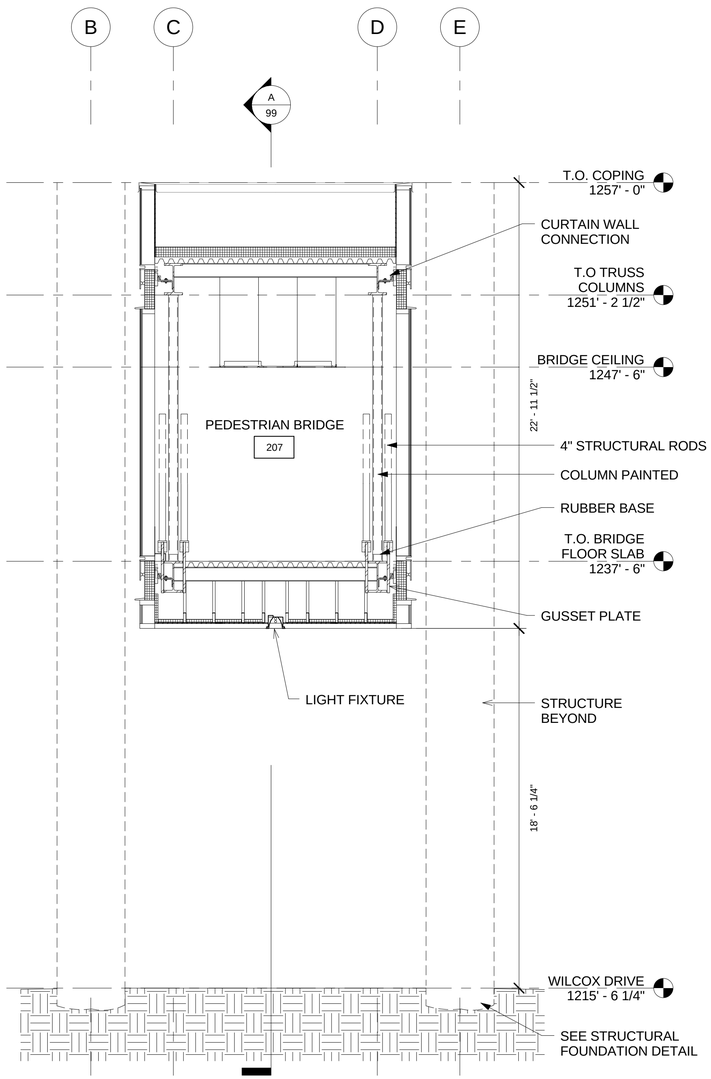

C 97 PEDESTRIAN BRIDGE SECTION -C

SCALE: 1/4" = 1'-0"

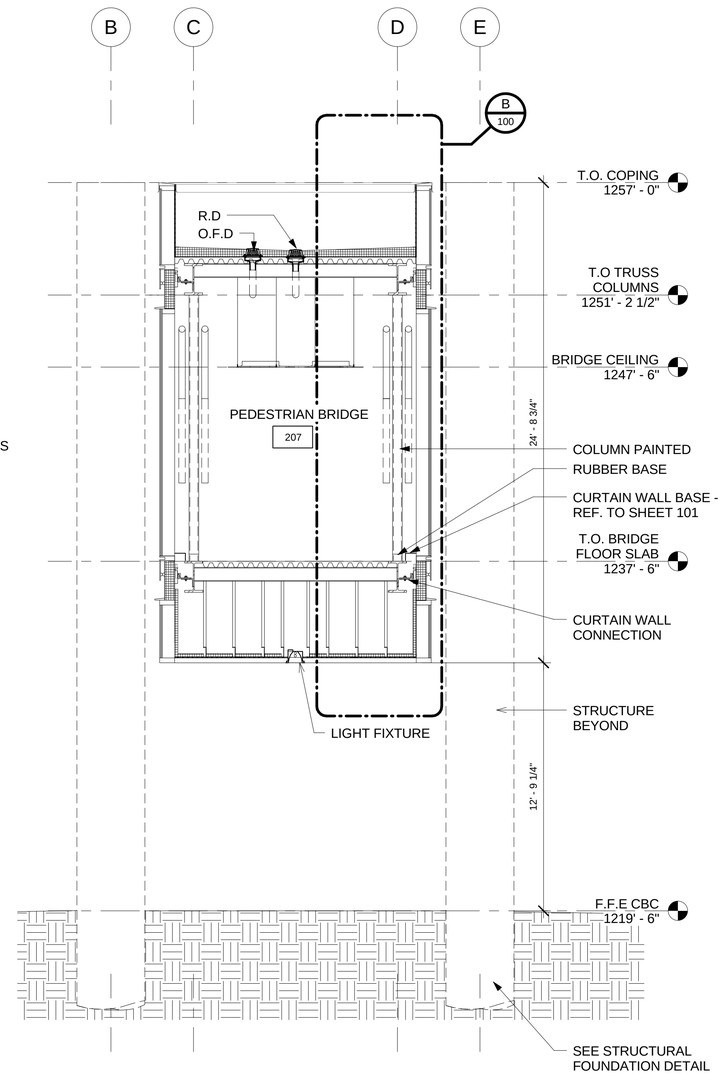

B 97 PEDESTRIAN BRIDGE SECTION - B

SCALE: 1/4" = 1'-0"

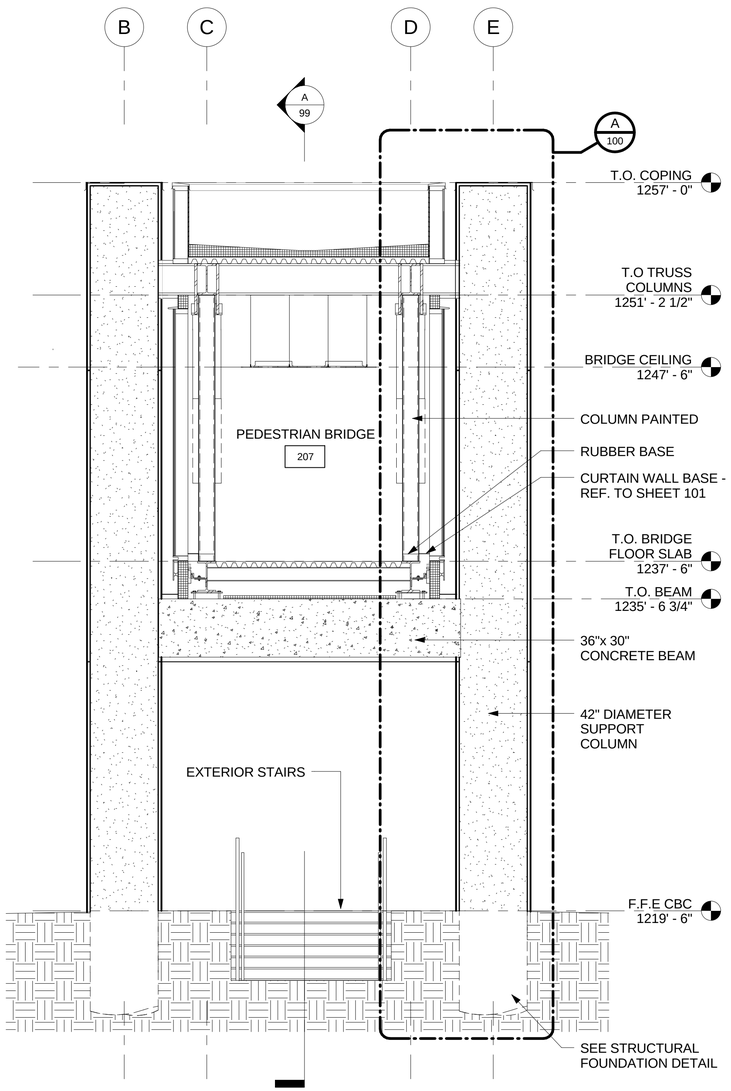

A 97 PEDESTRIAN BRIDGE SECTION - A

SCALE: 1/4" = 1'-0"

UNOFFICIAL SET

NOT FOR BIDDING

SEALED BY

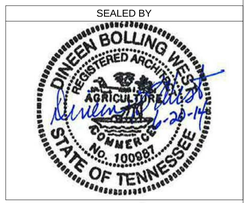

STATE OF TENNESSEE

DEPARTMENT OF TRANSPORTATION

BUILDING SECTIONS
PEDESTRIAN BRIDGE
OVER WILCOX DRIVE
BR. I.D. NO.
82SR1260017

Cain Rash West
Architects
Architectural Services
130 Regional Park Dr.
Kingsport, TN 37660
Phn (423) 349-7760
Fax (423) 349-7413
www.grcinc.com

6/19/2014 9:30:11 AM

U- 64- 162

plotted on: 6/19/2014 9:30:11 AM
SULLIVAN CO EASTMAN - PROJECT # 82085-3236-04 SHEET LABEL:

checked WEST
drawn DARNELL

PROJECT NO.	YEAR	SHEET NO.
STP - 126(19)	2014	98

REVISIONS

NO.	DATE	BY	DESCRIPTION

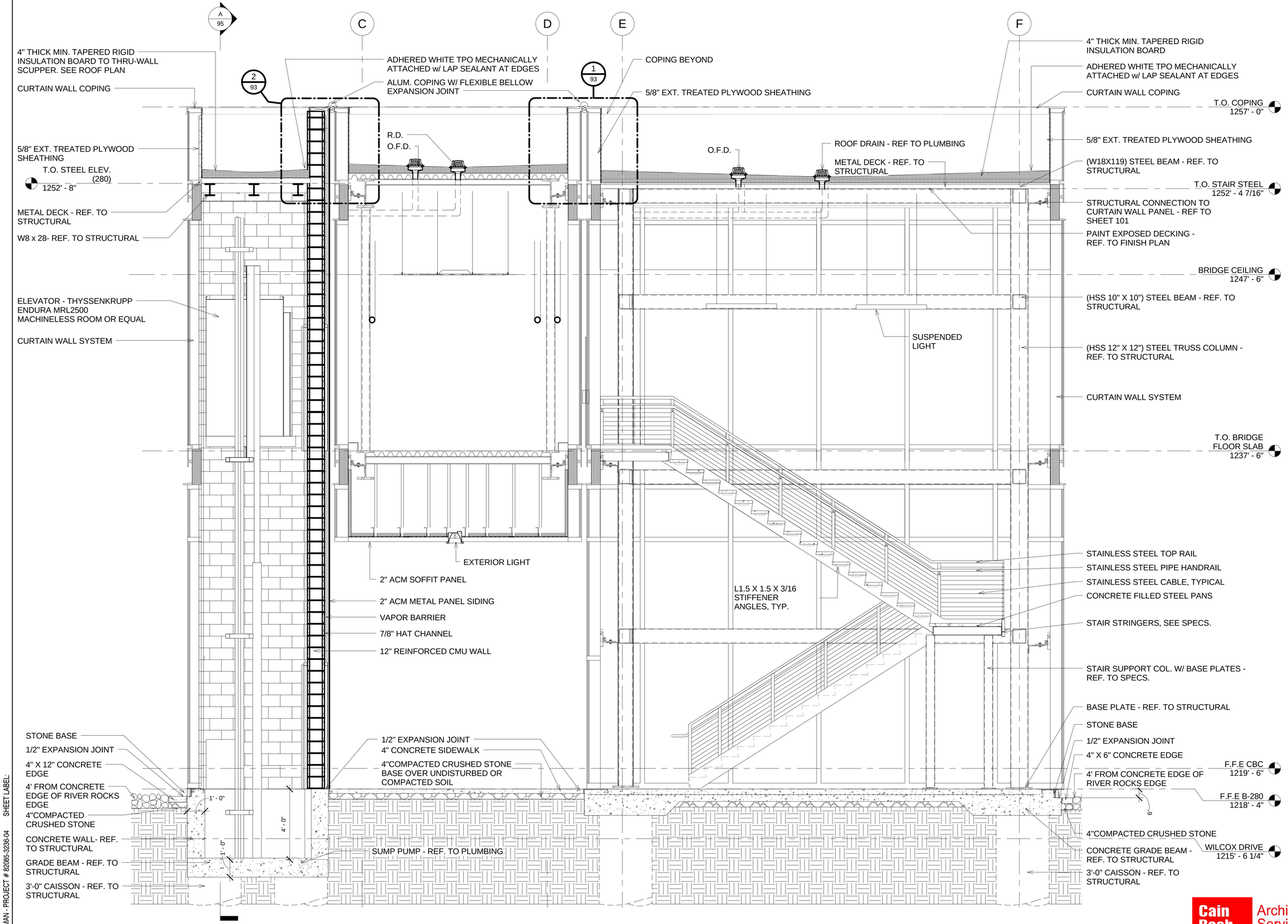

A/98 PEDESTRIAN BRIDGE SECTION - STAIR/ELEVATOR

SCALE: 3/8" = 1'-0"

UNOFFICIAL SET

NOT FOR BIDDING

SEALED BY

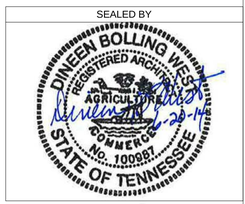

STATE OF TENNESSEE

DEPARTMENT OF TRANSPORTATION

BUILDING SECTIONS
PEDESTRIAN BRIDGE
OVER WILCOX DRIVE
BR. I.D. NO.
82SR1260017

U- 64 -163

Cain Rash West Architects

Architectural Services
130 Regional Park Dr.
Kingsport, TN 37660
Phn (423) 349-7760
Fax (423) 349-7413
www.grcinc.com

6/19/2014 9:30:21 AM

checked WEST

drawn DARNELL

plotted on: 6/19/2014 9:30:21 AM

SULLIVAN CO EASTMAN - PROJECT # 82085-3236-04 SHEET LABEL:

PROJECT NO.	YEAR	SHEET NO.
STP - 126(19)	2014	99

REVISIONS

NO.	DATE	BY	DESCRIPTION

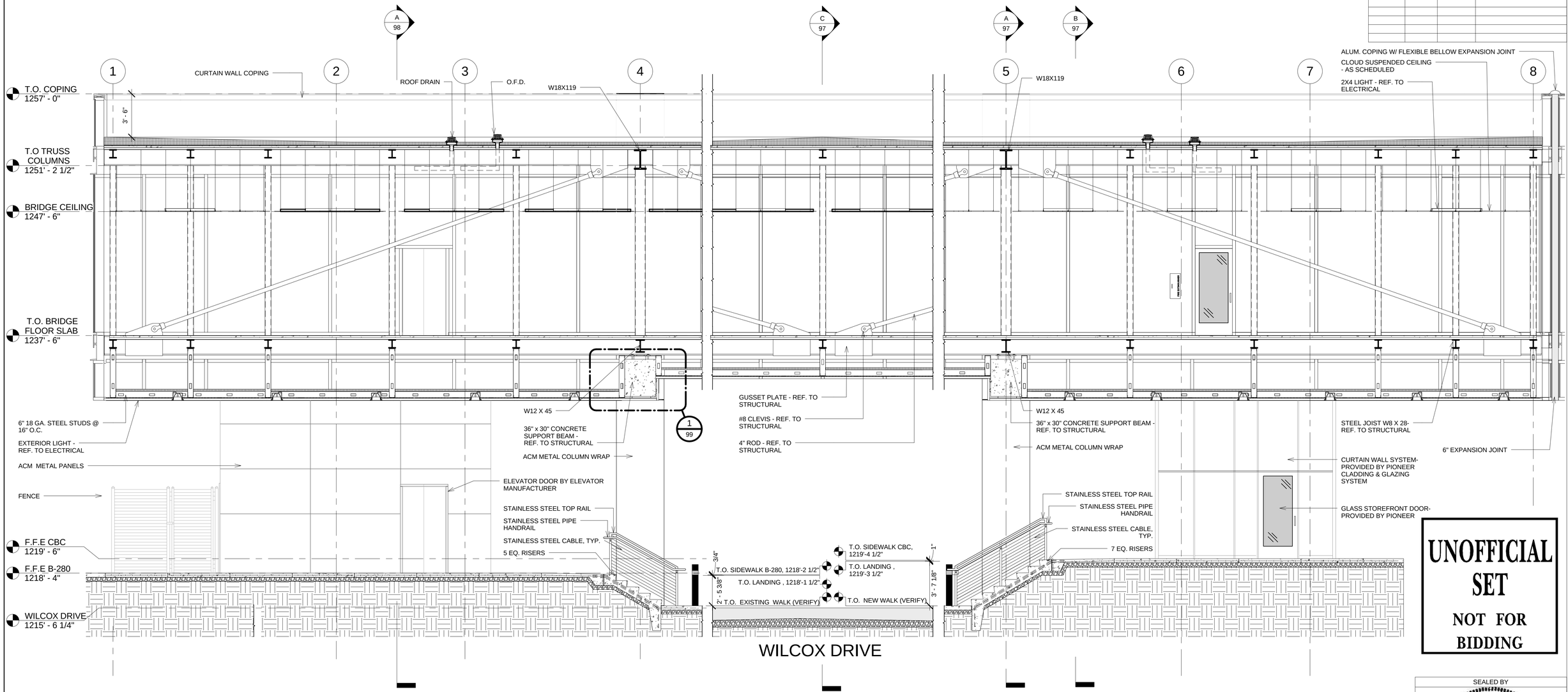

A 99 BRIDGE SECTION

SCALE: 1/4" = 1'-0"

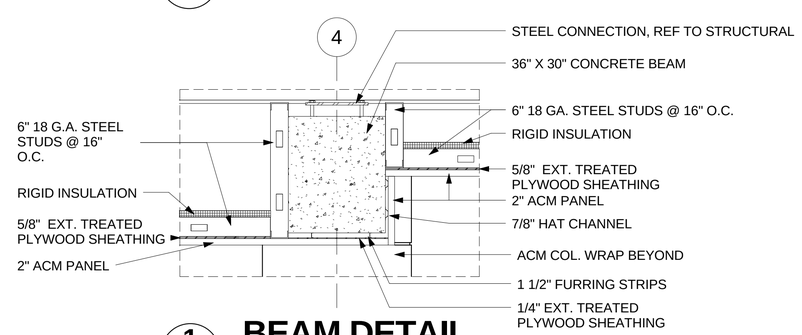

1 99 BEAM DETAIL

SCALE: 1/2" = 1'-0"

UNOFFICIAL SET

NOT FOR BIDDING

SEALED BY

DINEEN BOLLING WEST REGISTERED ARCHITECT AGRICULTURE COMMERCE No. 100997 STATE OF TENNESSEE

checked	WEST
drawn	DARNELL

plotted on: 6/19/2014 9:30:37 AM

SULLIVAN CO EASTMAN - PROJECT # 82065-3236-04 SHEET LABEL:

Cain Rash West Architects

Architectural Services

130 Regional Park Dr.
Kingsport, TN 37660
Phn (423) 349-7760
Fax (423) 349-7413
www.grcinc.com

6/19/2014 9:30:37 AM

STATE OF TENNESSEE

DEPARTMENT OF TRANSPORTATION

BUILDING SECTIONS
PEDESTRIAN BRIDGE
OVER WILCOX DRIVE
BR. I.D. NO.
82SR1260017

PROJECT NO.	YEAR	SHEET NO.
STP - 126(19)	2014	100

REVISIONS

NO.	DATE	BY	DESCRIPTION

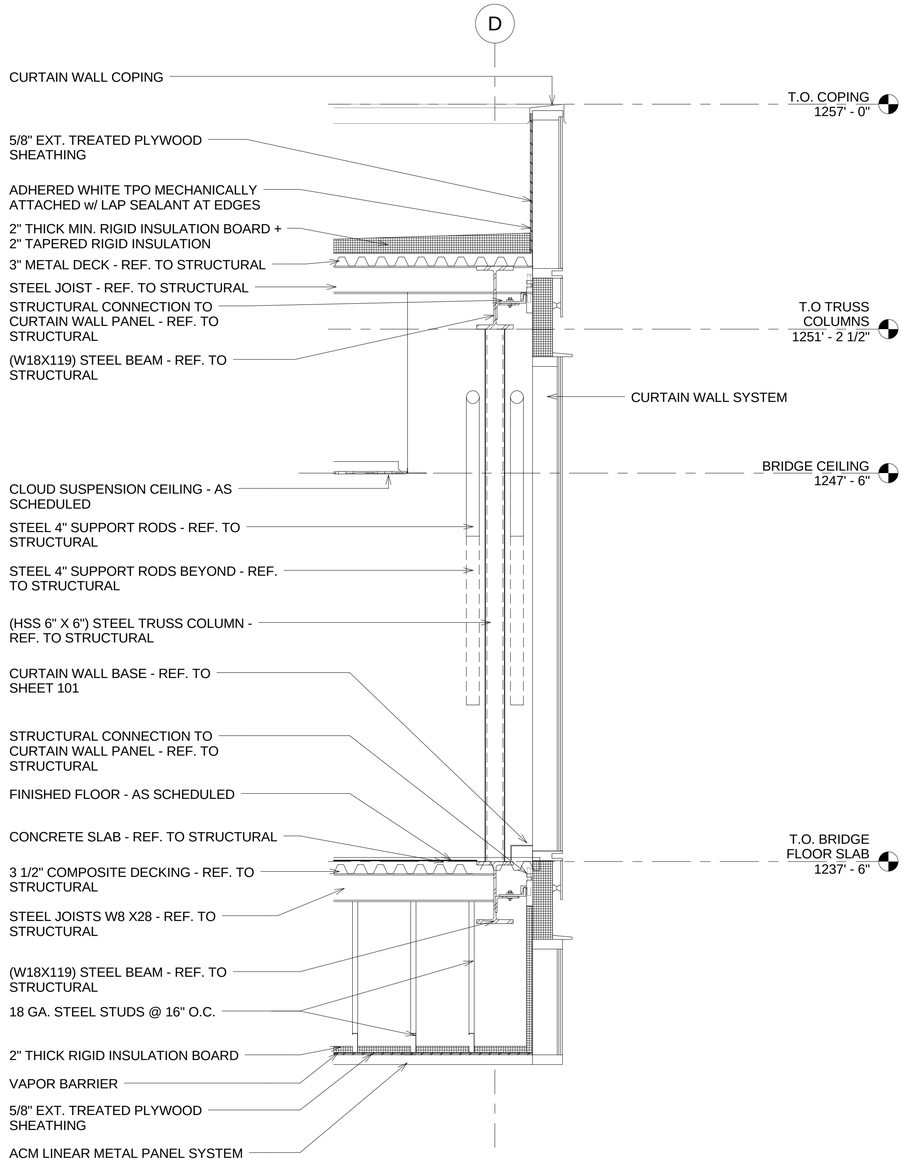

B 100 WALL SECTION - CURTAIN WALL

SCALE: 1/2" = 1'-0"

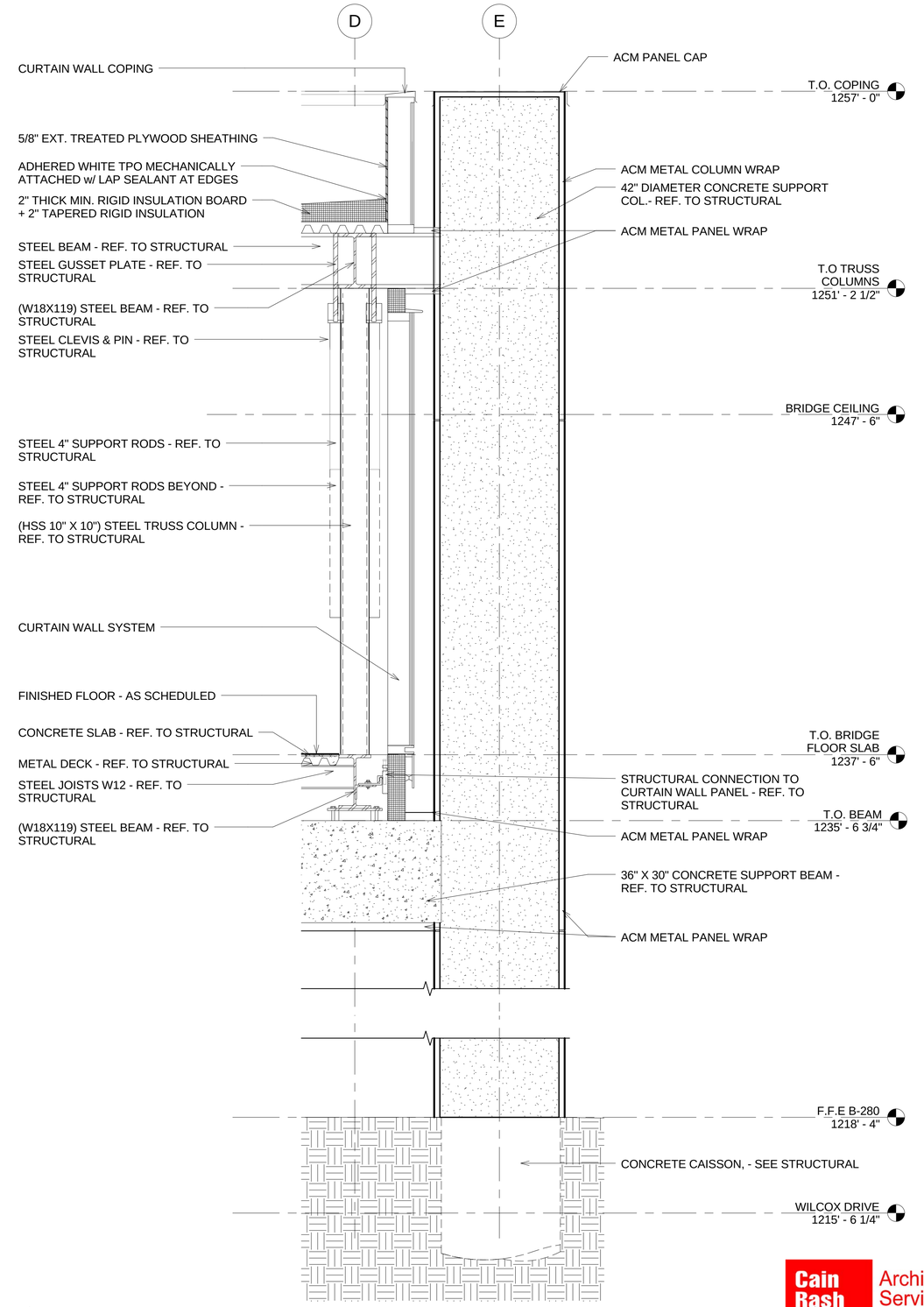

A 100 WALL SECTION - COL.

SCALE: 1/2" = 1'-0"

SECTION NOTES

1. FOR GENERAL NOTES, SEE SHEET 86.
2. SEE SITE PLAN LAYOUT AND FLOOR PLANS FOR ADDITIONAL LOCATIONS, DIMENSIONS AND ELEVATIONS PERTAINING TO SIDEWALKS, EXTERIOR RAMPS AND STEPS, AND EXTERIOR CONCRETE PADS
3. SEE SCHEDULES FOR WINDOW & DOOR HEIGHTS AND DIMENSIONS.
4. REFER TO ROOF PLAN DETAILS FOR FLASHING REQUIREMENTS NOT OTHERWISE SHOWN ON THESE SECTIONS.

checked WEST
drawn DARNELL

plotted on: 6/19/2014 9:30:49 AM
SULLIVAN CO EASTMAN - PROJECT # 82085-3236-04 SHEET LABEL:

UNOFFICIAL SET
NOT FOR BIDDING

SEALED BY

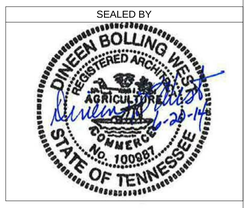

Cain Rash West Architects
Architectural Services
130 Regional Park Dr.
Kingsport, TN 37660
Phn (423) 349-7760
Fax (423) 349-7413
www.grcinc.com

6/19/2014 9:30:49 AM

STATE OF TENNESSEE
DEPARTMENT OF TRANSPORTATION

WALL SECTIONS
PEDESTRIAN BRIDGE
OVER WILCOX DRIVE
BR. I.D. NO.
82SR1260017

U- 64 -165

IMPORTANT NOTES!:

- **DETAILS D-1, D-2. D-10, D-11, D-13, D-16 ARE STANDARD DETAILS FROM PIONEER CLADDING & GLAZING AND ARE INTENDED TO ESTABLISH A STANDARD OF QUALITY. ONLY KEY DETAILS HAVE BEEN SELECTED. OTHER "ANCILLARY" DETAILS REQUIRED FOR COMPLETE SYSTEM MAY NOT BE SHOWN.**

- **OTHER MANUFACTURERS SUCH AS SOTA GLAZING INC, RAICO, OLDCASTLE BUILDING ENVELOPE OR EQUAL (OR SUPERIOR) PRODUCTS BY ALTERNATE MANUFACTURERS MUST BE SUBMITTED AND APPROVED. DETERMINATION AS TO THE EQUALITY OF PROPOSED SUBSTITUTIONS SHALL BE MADE BY THE ARCHITECT & TDOT . FOR THE FINAL SELECTED PRODUCT, IT IS EXPECTED THAT THE CONTRACTOR COMPLY WITH ALL OF THE MANUFACTURER'S DETAILS FOR A WARRANTED PRODUCT.**

CURTAINWALL COLORS

CURTAINWALL INTERIOR MULLION AND TRIM COLOR	AM3C57474-S , SILVER SMITH ACRA-BOND ULTRA, COLOR PRODUCED BY AKZONOBEL.
CURTAINWALL EXTERIOR FRAME MEMBERS, FLASHING, COPINGS, EXTERIOR ALUMINUM DOORS, CAMERA MOUNTING BRACKETS	KM3C42716-C BRIGHT SILVER II SPRAY TRINAR WITH KC3C19704 CLEAR COAT, COLOR PRODUCED BY AKZONOBEL.
SPANDREL PANEL (BEHIND FLYBY)	KL3C57457-C WITH AKZO CLEAR COAT (KC3C19704), 8003 3DK BLUE SPRAY TRINAR TMC WITH AKZO CLEAR COAT KC3C19704, COLOR PRODUCED BY AKZONOBEL
VG-1 (TYPICAL VISION)	1-3/4" VE1-48/VE1-85 IG T/T/T 1/4" CLEAR TEMPERED (AGC GLASS OR EQUAL) VE-48 #2, EDGE DELETION 1/2" AIRSPACE - BLACK SPACER, ARGON FILL, SIGHTLINE: 11/16", DOW 982 SILICONE (BLACK) 1/4" CLEAR TEMPERED (AGC GLASS OR EQUAL) VE-85 #4, EDGE DELETION 1/2" AIRSPACE - BLACK SPACER, ARGON FILL, SIGHTLINE: 11/16", DOW 982 SILICONE (BLACK) 1/4" CLEAR TEMPERED (AGC GLASS OR EQUAL)
VG-2 (PARAPET GLASS)	9/16" VS1-20 LAMINATED HS/HS VANCEVA 0212 1/4" CLEAR HS VS-20 #2 1/4" CLEAR HS **OFFICAL MAKEUP FROM VIRACON PENDING

PROJECT NO.	YEAR	SHEET NO.
STP - 126(19)	2014	101

REVISIONS

NO.	DATE	BY	DESCRIPTION
1	7/15/14	DARNELL	MANUF. ADDED TO GEN. NOTES, UPDATED CURTAINWALL COLORS

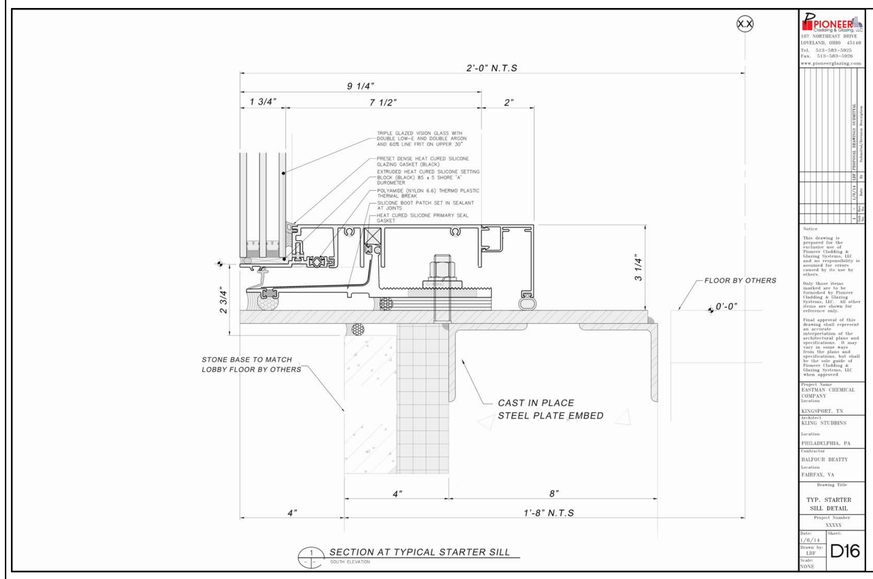

1 SECTION AT TYPICAL STARTER SILL
SOUTH ELEVATION

PIONEER Cladding & Glazing, LLC
107 NORTHEAST DRIVE
LOVELAND, OHIO 45140
Tel. 513-583-5005
Fax. 513-583-5008
www.pioneergrating.com

Notice

This drawing is prepared for the exclusive use of Pioneer Cladding & Glazing Systems, LLC and Pioneer Cladding is accepted for errors, caused by its use by others.

Only those items marked as "Pioneer" are furnished by Pioneer Cladding & Glazing Systems, LLC. All other items are shown for reference only.

Final approval of this drawing shall represent the mutually agreed interpretation of the architectural plans and specifications. If there may be some ways from the plans and specifications, we shall be the sole guide of Pioneer Cladding & Glazing Systems, LLC when approved.

Project Name
EASTMAN CHEMICAL COMPANY
Location
KINGSPORT, TN
Architect
KLING STUBBINS
Location
PHILADELPHIA, PA
Contractor
BALFOUR BEATTY
Location
FAIRFAX, VA

Drawing Title
TYP. STARTER SILL DETAIL

Project Number
XXXXX

Date 7/8/14 Drawn by: LEP Scale NONE Sheet D16

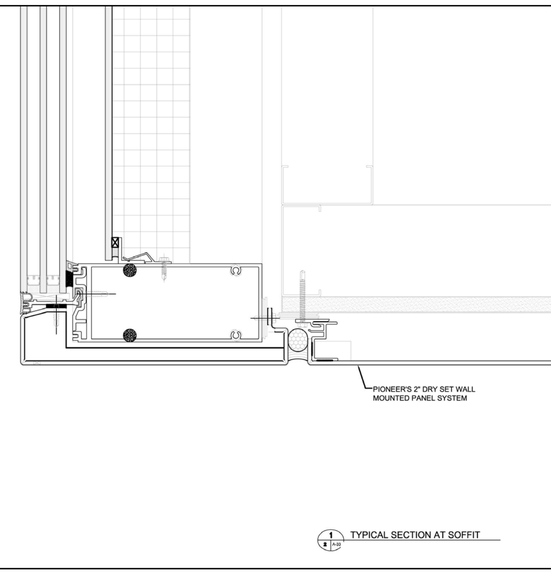

1 TYPICAL SECTION AT SOFFIT
A-D

PIONEER Cladding & Glazing, LLC
107 NORTHEAST DRIVE
LOVELAND, OHIO 45140
Tel. 513-583-5005
Fax. 513-583-5008
www.pioneergrating.com

Notice

This drawing is prepared for the exclusive use of Pioneer Cladding & Glazing Systems, LLC and Pioneer Cladding is accepted for errors, caused by its use by others.

Only those items marked as "Pioneer" are furnished by Pioneer Cladding & Glazing Systems, LLC. All other items are shown for reference only.

Final approval of this drawing shall represent the mutually agreed interpretation of the architectural plans and specifications. If there may be some ways from the plans and specifications, we shall be the sole guide of Pioneer Cladding & Glazing Systems, LLC when approved.

Project Name
EASTMAN CHEMICAL COMPANY
Location
KINGSPORT, TN
Architect
CAIN RASH WEST
Location
KINGSPORT, TN
Contractor
BALFOUR BEATTY
Location
FAIRFAX, VA

Drawing Title
TYP. COPING DETAIL

Project Number
XXXXX

Date 4/29/14 Drawn by: LEP Scale NONE Sheet D13

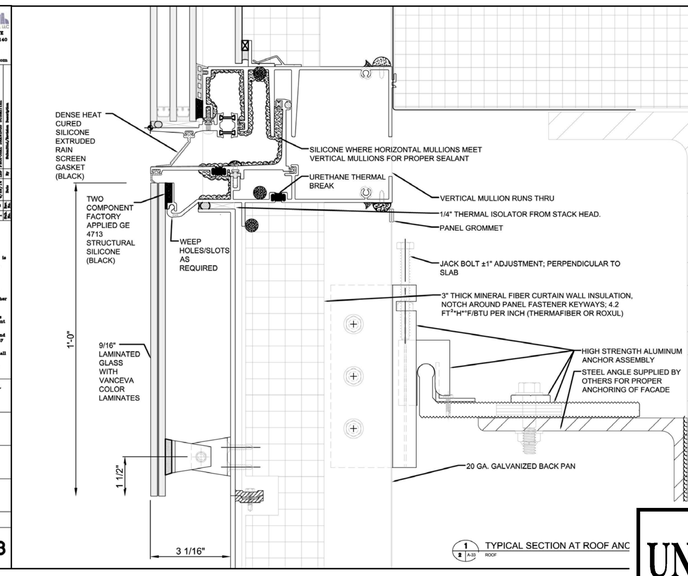

1 TYPICAL SECTION AT ROOF ANC
A-D ROOF

PIONEER Cladding & Glazing, LLC
107 NORTHEAST DRIVE
LOVELAND, OHIO 45140
Tel. 513-583-5005
Fax. 513-583-5008
www.pioneergrating.com

Notice

This drawing is prepared for the exclusive use of Pioneer Cladding & Glazing Systems, LLC and Pioneer Cladding is accepted for errors, caused by its use by others.

Only those items marked as "Pioneer" are furnished by Pioneer Cladding & Glazing Systems, LLC. All other items are shown for reference only.

Final approval of this drawing shall represent the mutually agreed interpretation of the architectural plans and specifications. If there may be some ways from the plans and specifications, we shall be the sole guide of Pioneer Cladding & Glazing Systems, LLC when approved.

Project Name
EASTMAN CHEMICAL COMPANY
Location
KINGSPORT, TN
Architect
CAIN RASH WEST
Location
KINGSPORT, TN
Contractor
BALFOUR BEATTY
Location
FAIRFAX, VA

Drawing Title
TYP. ANCHOR

UNOFFICIAL SET

NOT FOR BIDDING

SEALED BY

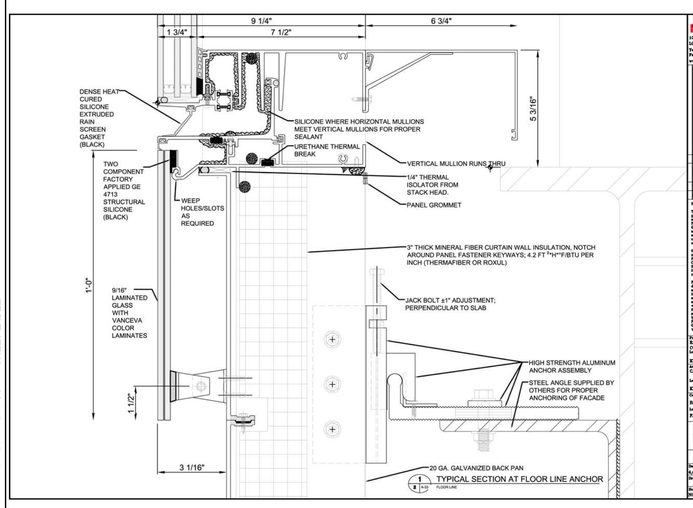

1 TYPICAL SECTION AT FLOOR LINE ANCHOR
A-D FLOOR LINE

PIONEER Cladding & Glazing, LLC
107 NORTHEAST DRIVE
LOVELAND, OHIO 45140
Tel. 513-583-5005
Fax. 513-583-5008
www.pioneergrating.com

Notice

This drawing is prepared for the exclusive use of Pioneer Cladding & Glazing Systems, LLC and Pioneer Cladding is accepted for errors, caused by its use by others.

Only those items marked as "Pioneer" are furnished by Pioneer Cladding & Glazing Systems, LLC. All other items are shown for reference only.

Final approval of this drawing shall represent the mutually agreed interpretation of the architectural plans and specifications. If there may be some ways from the plans and specifications, we shall be the sole guide of Pioneer Cladding & Glazing Systems, LLC when approved.

Project Name
EASTMAN CHEMICAL COMPANY
Location
KINGSPORT, TN
Architect
CAIN RASH WEST
Location
KINGSPORT, TN
Contractor
BALFOUR BEATTY
Location
FAIRFAX, VA

Drawing Title
TYP. ANCHOR DETAIL

Project Number
XXXXX

Date 4/29/14 Drawn by: LEP Scale NONE Sheet D10

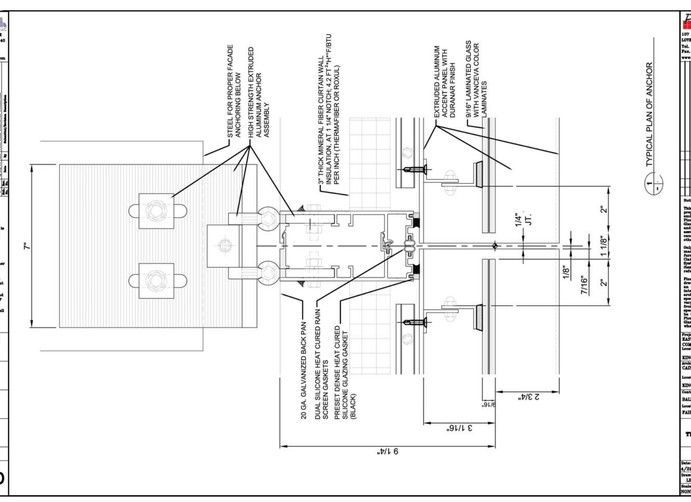

1 TYPICAL PLAN OF ANCHOR
A-D

PIONEER Cladding & Glazing, LLC
107 NORTHEAST DRIVE
LOVELAND, OHIO 45140
Tel. 513-583-5005
Fax. 513-583-5008
www.pioneergrating.com

Notice

This drawing is prepared for the exclusive use of Pioneer Cladding & Glazing Systems, LLC and Pioneer Cladding is accepted for errors, caused by its use by others.

Only those items marked as "Pioneer" are furnished by Pioneer Cladding & Glazing Systems, LLC. All other items are shown for reference only.

Final approval of this drawing shall represent the mutually agreed interpretation of the architectural plans and specifications. If there may be some ways from the plans and specifications, we shall be the sole guide of Pioneer Cladding & Glazing Systems, LLC when approved.

Project Name
EASTMAN CHEMICAL COMPANY
Location
KINGSPORT, TN
Architect
CAIN RASH WEST
Location
KINGSPORT, TN
Contractor
BALFOUR BEATTY
Location
FAIRFAX, VA

Drawing Title
TYP. VERTICAL DETAIL

Project Number
XXXXX

Date 4/29/14 Drawn by: LEP Scale NONE Sheet D2

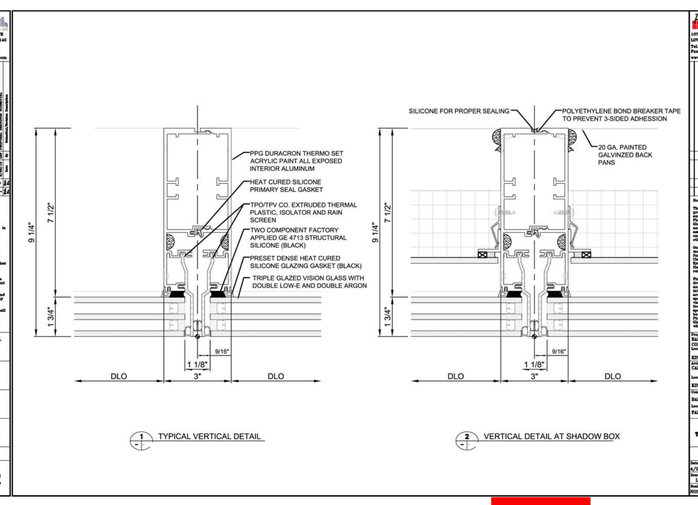

1 TYPICAL VERTICAL DETAIL
2 VERTICAL DETAIL AT SHADOW BOX

PIONEER Cladding & Glazing, LLC
107 NORTHEAST DRIVE
LOVELAND, OHIO 45140
Tel. 513-583-5005
Fax. 513-583-5008
www.pioneergrating.com

Notice

This drawing is prepared for the exclusive use of Pioneer Cladding & Glazing Systems, LLC and Pioneer Cladding is accepted for errors, caused by its use by others.

Only those items marked as "Pioneer" are furnished by Pioneer Cladding & Glazing Systems, LLC. All other items are shown for reference only.

Final approval of this drawing shall represent the mutually agreed interpretation of the architectural plans and specifications. If there may be some ways from the plans and specifications, we shall be the sole guide of Pioneer Cladding & Glazing Systems, LLC when approved.

Project Name
EASTMAN CHEMICAL COMPANY
Location
KINGSPORT, TN
Architect
CAIN RASH WEST
Location
KINGSPORT, TN
Contractor
BALFOUR BEATTY
Location
FAIRFAX, VA

Drawing Title
TYP. VERTICAL DETAIL

Project Number
XXXXX

Date 4/29/14 Drawn by: LEP Scale NONE Sheet D1

STATE OF TENNESSEE

DEPARTMENT OF TRANSPORTATION

GLAZING DETAILS
PEDESTRIAN
BRIDGE OVER
WILCOX DRIVE BR.
I.D. NO.
82SR1260017

Cain Rash West
Architects

Architectural Services
130 Regional Park Dr.
Kingsport, TN 37660
Phn (423) 349-7760
Fax (423) 349-7413
www.grcinc.com

8/19/2014 2:58:40 PM

plotted on: 8/19/2014 2:58:40 PM
SULLIVAN CO EASTMAN - PROJECT # 82085-3236-04 SHEET LABEL:

checked	NOTES ONLY WEST
drawn	NOTES ONLY DARNELL

PROJECT NO.	YEAR	SHEET NO.
STP - 126(19)	2014	102

REVISIONS

NO.	DATE	BY	DESCRIPTION

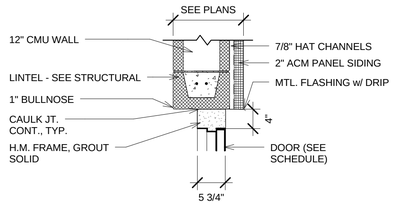

HEAD "H1"

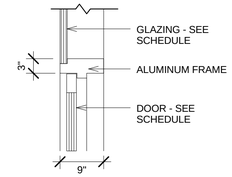

HEAD "H2"

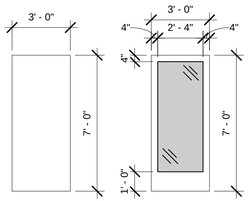

F FG

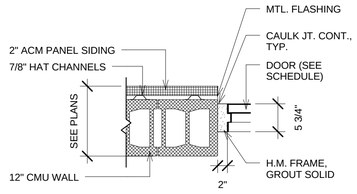

JAMB "J1"

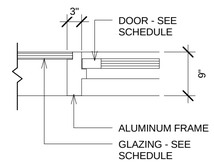

JAMB "J2"

DOOR TYPES

SCALE: 1/4" = 1'-0"

FRAME DETAILS

SCALE: 3/4" = 1'-0"

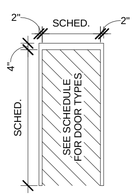

TYPE "F1"

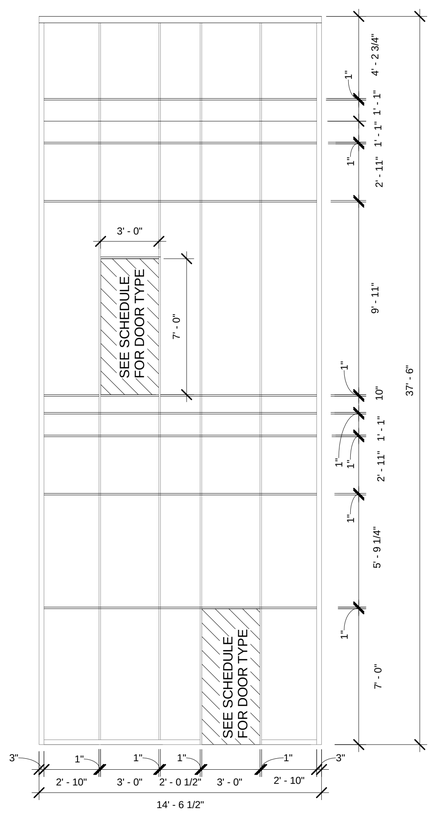

TYPE "F2" (CBC)

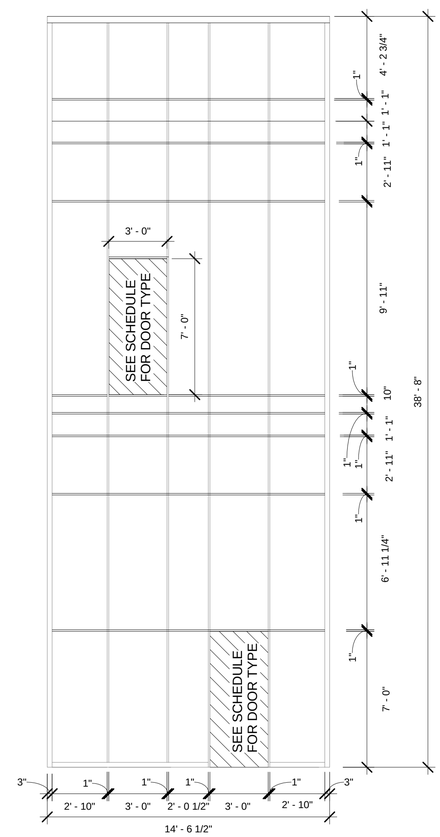

TYPE "F3" (280)

FRAME TYPES

SCALE: 1/4" = 1'-0"

DOOR SCHEDULE

DOORS							FRAMES				REMARKS
MARK	UNIT SIZE (WXH)	TYPE	MATERIAL	LABEL	GLAZING	HDW SET	TYPE	MATERIAL	HEAD	JAMB	
101A	3'-0" X 7'-0" X 1 3/4"	F	HM	-		1	F1	HM	H1	J1	
102A	3'-6" X 7'-0" X 1 3/4"		ALUMINUM					ALUMINUM			DOOR AND FRAME BY ELEVATOR SUPPLIER
103A	3'-0" X 7'-0" X 1 3/4"	FG	ALUMINUM		G2	2	F3	ALUMINUM	H2	J2	"G1" GLAZING IN FRAME
104A	3'-6" X 7'-0" X 1 3/4"		ALUMINUM					ALUMINUM			DOOR AND FRAME BY ELEVATOR SUPPLIER
105A	3'-0" X 7'-0" X 1 3/4"	F	HM			1	F1	HM	H1	J1	
106A	3'-0" X 7'-0" X 1 3/4"	FG	ALUMINUM		G2	2	F2	ALUMINUM	H2	J2	"G1" GLAZING IN FRAME
202A	3'-6" X 7'-0" X 1 3/4"		ALUMINUM					ALUMINUM			DOOR AND FRAME BY ELEVATOR SUPPLIER
203A	3'-0" X 7'-0" X 1 3/4"	FG	ALUMINUM		G2	2	F3	ALUMINUM	H2	J2	"G1" GLAZING IN FRAME
204A	3'-6" X 7'-0" X 1 3/4"		ALUMINUM					ALUMINUM			DOOR AND FRAME BY ELEVATOR SUPPLIER
206A	3'-0" X 7'-0" X 1 3/4"	FG	ALUMINUM		G2	2	F2	ALUMINUM	H2	J2	"G1" GLAZING IN FRAME

HARDWARE SCHEDULE

HEADING # 1

1 SGL DOOR:101A
1 SGL DOOR:105A

3'0" x 7'0" x 1 3/4" HMD/HMF

3	EA	HINGE	T4A3386 4.5 X 4.5 (NRP)	32D	(HI-2) MC KINNEY
1	EA	RIM EXIT	12-8888F 814-PSB NIGHTLATCH	32D	(ED-12)SARGENT
1	EA	CLOSER	351-CPS TB	EN	(CL-1) SARGENT
1	EA	KICKPLATE	K1050 8 X 34 B4E X CSK	32D	(KP-2) ROCKWOOD
1	EA	DOOR STOPS	409	32D	(ST-2) ROCKWOOD
1	EA	THRESHOLD	171 36 1/2" HIGH 5" WIDE	A	(TH-3) PEMKO
1	EA	GASKET	45041 3070 BRUSH	C	(GA-8) PEMKO
1	EA	SWEEP	3452 NB 36 BRUSH	C	(SW-2) PEMKO

HEADING # 2

1 SGL DOOR:103A
1 SGL DOOR:106A
1 SGL DOOR:203A
1 SGL DOOR:206A

1	EA	PASSAGE LOCKSET	(SARGENT)
1	EA	CLOSER	(SARGENT)

BALANCE OF HARDWARE BY DOOR MANUFACTURER

DOOR NOTES

1. ALL DOORS SHALL BE PROVIDED BY A SINGLE MANUFACTURER.
2. DOOR AND FRAME MANUFACTURERS SHALL PROVIDE FULL SHOP DRAWINGS INCLUDING LAYOUT, PROFILES, PRODUCT, COMPONENTS, ANCHORAGES AND ACCESSORIES.
3. SHOP DRAWINGS SHALL INDICATE DOOR TYPES, FRAME, MATERIALS, THICKNESSES, MORTISES, REINFORCEMENTS, EXPOSED FASTENER LOCATIONS, AND HARDWARE ARRANGEMENTS. (SHOP DRAWINGS SHALL UTILIZE ARCHITECT'S DOOR AND FRAME MARK NUMBERS FROM CONSTRUCTION DOCUMENTS.)
4. ALL HOLLOW METAL DOORS SHALL BE CONSTRUCTED OF 18 GA. STEEL, AND SHALL EMPLOY MANUFACTURER'S STANDARD CORE CONSTRUCTION THAT COMPLIES WITH SDI STANDARDS FOR A FULL FLUSH DOOR.
5. ALL HARDWARE LOCATIONS SHALL CONFORM TO THE RECOMMENDATIONS OF THE "DOOR AND HARDWARE INSTITUTE."
6. ALL LOCKS SHALL BE KEYED TO SARGENT SIGNATURE SERIES OR EQUAL.
7. ALL DOOR LOCKING AND LATCHING HARDWARE SHALL BE FURNISHED WITH ACCOMPLIANT LEVER SETS UNLESS OTHERWISE NOTED.
8. ALL EXTERIOR HINGES SHALL BE STAINLESS STEEL, BALL BEARING TYPES, WITH NON-REMOVABLE PIN.
9. ALL HOLLOW METAL WORK SHALL COMPLY WITH DIS SPECIFICATIONS SDI-105, SDI-117, AND SDI-124.
10. ALL HOLLOW METAL DOOR FRAMES SHALL BE INSTALLED WITH A MINIMUM OF 3 ANCHORS PER JAMB AT HINGE AND STRIKE LEVELS.
11. REFER TO ELEVATIONS AND FINISH PLANS FOR DOOR FINISHES.
12. THE FOLLOWING PRODUCTS AND/OR MANUFACTURERS ARE INTENDED TO ESTABLISH A STANDARD OF QUALITY. EQUAL (OR SUPERIOR) PRODUCTS BY ALTERNATE MANUFACTURERS MUST BE SUBMITTED AND APPROVED PRIOR TO BIDDING OR THEY WILL BE SUBJECT TO REJECTION. DETERMINATION AS TO THE EQUALITY OF PROPOSED SUBSTITUTIONS SHALL BE MADE SOLELY BY THE ARCHITECT. ALL HARDWARE SHALL BE GRADE 1.

STEEL FRAMES & DOORS	AMWELD BUILDING PRODUCTS, INC. CECO DOOR PRODUCTS STEELCRAFT
HINGES	HAGER 4 1/2" STD. WT. (.134)
CYLINDRICAL LOCKSETS	SARGENT
MORTISE LOCKSET/LATCHES	SARGENT
EXIT DEVICES	SARGENT
OPERATING TRIM	SARGENT
DEADBOLTS	SARGENT
TRIM UNITS	HAGER
CLOSER	SARGENT
STOPS/HOLDERS	HAGER, IVES, ROCKWOOD
SILENCERS	HAGER
SEALS / SWEEPS	HAGER
THRESHOLDS	HAGER, NATIONAL GUARD, ZERO, PEMKO

GLAZING LEGEND

G1 = 9/16" LAMINATED GLASS WITH VANCEVA COLOR MAINATES
G2 = 3/4" CLEAR LOW-E, INSULATED GLASS

* REFER TO SHEET 101 FOR GLAZING COLORS!

DOOR LEGEND

HM = HOLLOW METAL

UNOFFICIAL SET
NOT FOR BIDDING

SEALED BY

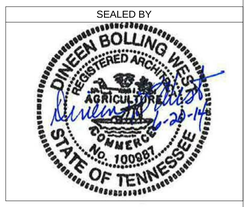

Cain Rash West Architects
Architectural Services
130 Regional Park Dr.
Kingsport, TN 37660
Phn (423) 349-7760
Fax (423) 349-7413
www.grcinc.com

STATE OF TENNESSEE
DEPARTMENT OF TRANSPORTATION

DOOR SCHEDULE
PEDESTRIAN BRIDGE
OVER WILCOX DRIVE
BR. I.D. NO.
82SR1260017

U- 64 -167

plotted on: 6/19/2014 9:31:11 AM
SULLIVAN CO EASTMAN - PROJECT # 82065-3236-04 SHEET LABEL:

checked WEST
drawn DARNELL

6/19/2014 9:31:11 AM

PROJECT NO.	YEAR	SHEET NO.
STP - 126(19)	2014	103

REVISIONS

NO.	DATE	BY	DESCRIPTION
1	7/15/14	DARNELL	UPDATED FINISH SCHEDULE
2	7/23/14	DARNELL	UPDATED CEILING TILE

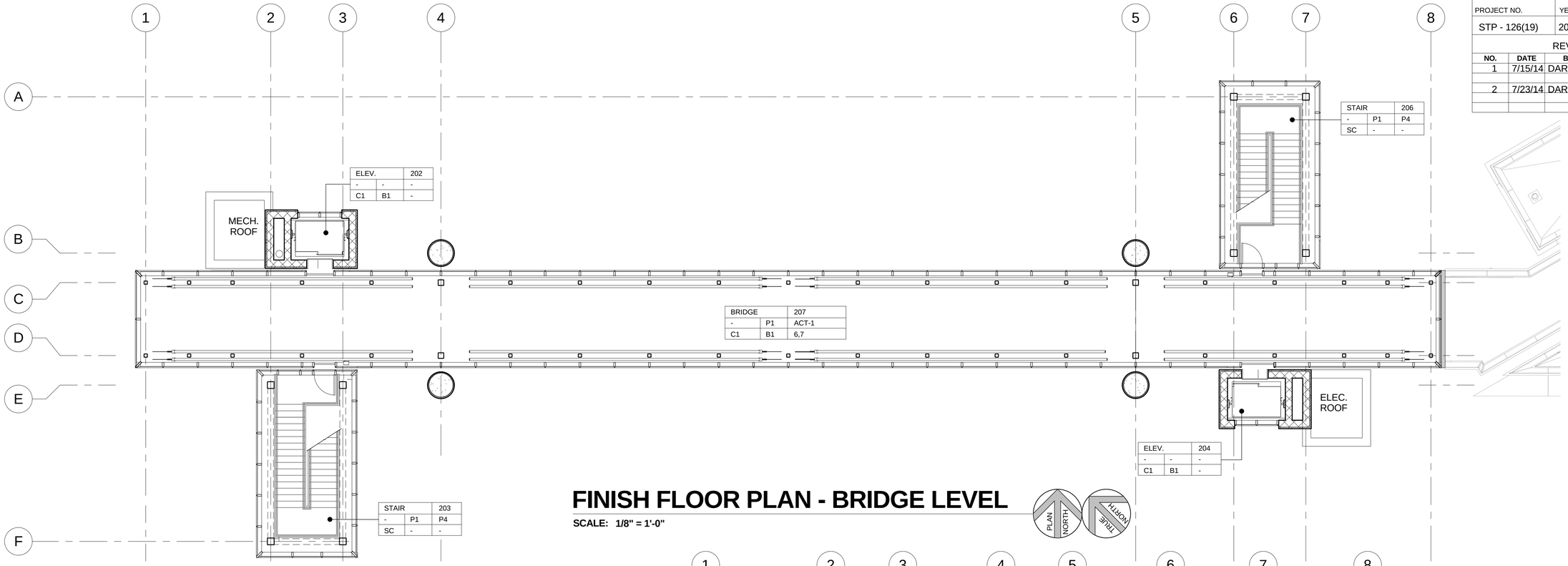

FINISH FLOOR PLAN - BRIDGE LEVEL

SCALE: 1/8" = 1'-0"

PLAN NORTH / TRUE NORTH

FINISH SCHEDULE

CODE	ITEMS	MANUFACTURER & DESCRIPTION
	FLOORING	
C1	CARPET TILE	MILLIKEN CONTRACT, CARPET TILE 1 M X 1M, SERIES: COLOR WASH, COLOR: TO BE DETERMINED.
SC	SEALED CONCRETE	
	BASE	
B1	RUBBER BASE	JOHNSONITE, 4" RUBBER BASE, COLOR: TBD
	WALL	
P1	PAINT	COLOR: 1.) TNEMEC METALLIC COLOR- SERIES 1077 2.) TENEMEC CLEAR TOP COAT - SERIES 1079 (STRUCTURE)
P2	PAINT	SHERWIN WILLIAMS, COLOR: TBD(CMU WALLS)
P3	PAINT	SHERWIN WILLIAMS, COLOR: TBD (DOOR & DOOR TRIM)
	CEILINGS	
ACT1	CEILING CLOUD	ARMSTRONG: AXIOM-KNIFE EDGE PROFILE TRIM IN WHITE AND ULTIMA HIGH-NRC BEVELED TEGULAR
EXP	EXPOSED	
P-4	PAINT	SHERWIN WILLIAMS: COLOR: TBD, FINISH:FLAT (CEILING)
CURTAINWALL COLORS REF TO SHEET 101 FOR INFORMATION!		

FINISH LEGEND

ROOM NAME		ROOM NUMBER
FRAMES	WALLS	CEILING
FLOORS	BASE	NOTE(S)

ROOM TAG

FINISH NOTES

1. ALL PAINTED FINISHED COLORS SHALL BE AS SELECTED BY ARCHITECT FROM FULL RANGE UNLESS SPECIFICALLY NOTED OTHERWISE IN THE SPECIFICATION BOOK OR ON THE PLANS.
2. ALL INTERIOR WALL SURFACES SHALL RECEIVE A MINIMUM OF TWO FINISH COATS OF PAINT.
3. PROVIDE AND INSTALL APPROPRIATE RUBBER OR ALUMINUM TRANSITION STRIPS AT INTERFACE OF DISSIMILAR FLOOR FINISHES UNLESS NOTED OTHERWISE.
4. REFER TO REFLECTED CEILING PLAN FOR ALL CEILING HEIGHTS AS WELL AS SOFFIT HEIGHTS AND DIMENSIONS.
5. ALL EXPOSED STEEL THROUGH OUT THE STAIR AND BRIDGE STRUCTURE SHALL BE PAINTED UNLESS SPECIFICALLY NOTED OTHERWISE IN THE SPECIFICATION BOOK OR ON THE PLANS. MANUFACTURER SHALL PRIME FOR FIELD PAINTING.
6. NOTCH CARPET TILE AROUND COLUMNS AND GUSSET PLATES, TYP.
7. WALL BASE AROUND COLUMNS ONLY ON BRIDGE AREA.

GRAPHIC SCALE 1/8" = 1'-0" (0' 5' 10' 15')

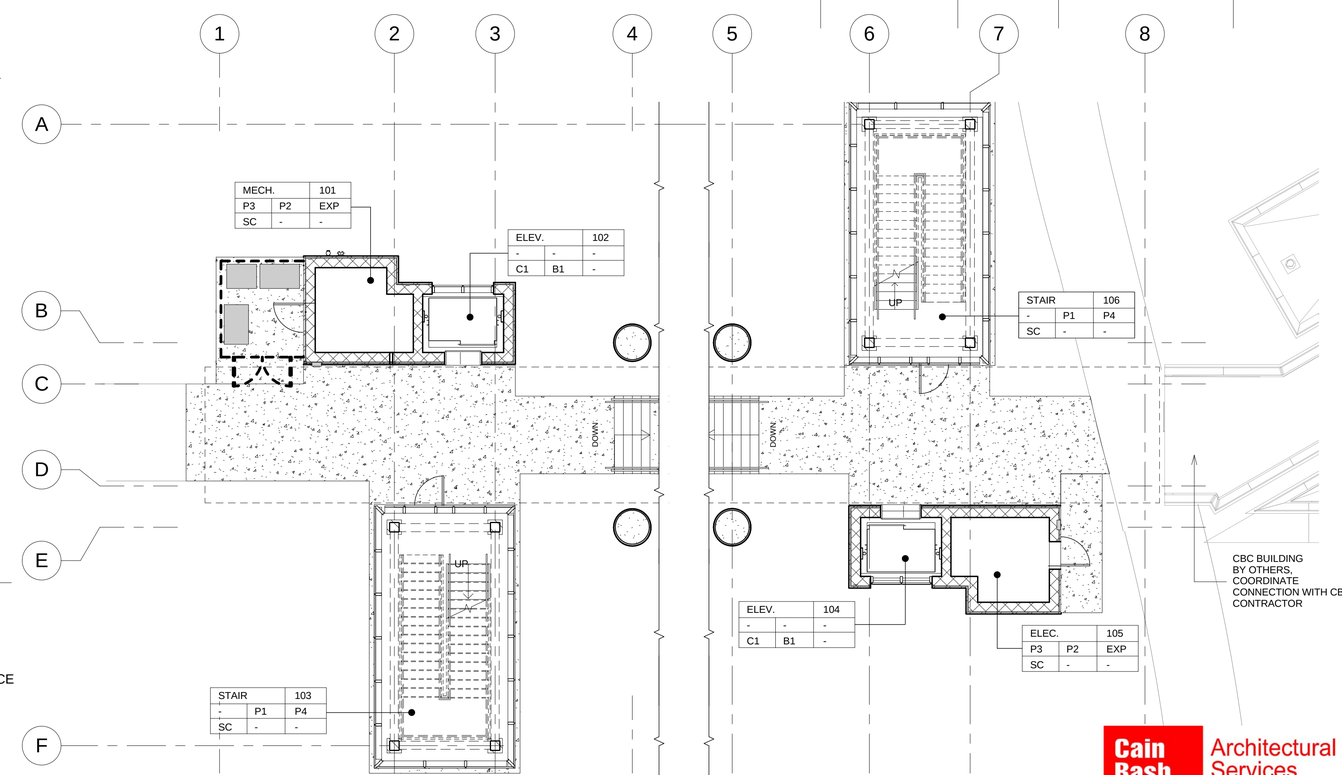

FINISH FLOOR PLAN - FIRST FLOOR

SCALE: 1/8" = 1'-0"

PLAN NORTH / TRUE NORTH

UNOFFICIAL SET

NOT FOR BIDDING

SEALED BY

DINEEN BOLLING WEST REGISTERED ARCHITECT AGRICULTURE COMMERCE No. 100987 STATE OF TENNESSEE

7-23-14

Cain Rash West Architects

Architectural Services

130 Regional Park Dr.
Kingsport, TN 37660
Phn (423) 349-7760
Fax (423) 349-7413
www.grcinc.com

STATE OF TENNESSEE

DEPARTMENT OF TRANSPORTATION

FINISH PLAN
PEDESTRIAN BRIDGE
OVER WILCOX DRIVE
BR. I.D. NO.
82SR1260017

U- 64 -168

7/23/2014 2:55:56 PM

plotted on: 7/23/2014 2:55:56 PM

SULLIVAN CO EASTMAN - PROJECT # 82085-3236-04

SHEET LABEL:

checked WEST

drawn DARNELL

PROJECT NO.	YEAR	SHEET NO.
STP - 126(19)	2014	104

REVISIONS

NO.	DATE	BY	DESCRIPTION

REFLECTED CEILING NOTES.

1. CEILING SPOT ELEVATIONS INDICATED ON PLAN DENOTE HEIGHT ABOVE FINISHED FLOOR.
2. UNLESS OTHERWISE NOTED ON DRAWINGS, SUSPENDED ACOUSTICAL CEILING GRID SHALL BE CENTERED WITHIN SPACE.
3. ACOUSTICAL CEILING INSTALLATION SHALL BE COORDINATED WITH ALL OTHER TRADES PRIOR TO COMMENCEMENT OF WORK.
4. REFER TO ENGINEERING SHEETS FOR FULL SPRINKLER, LIGHTING, AND HVAC LAYOUTS AND SPECIFICATIONS. SOME ITEMS MAY NOT BE SHOWN ON THIS DRAWING.

CEILING LEGEND

- CEILING CLOUD WITH REVEALS
- HVAC SUPPLY DIFFUSER
- LIGHT FIXTURE 2' X 4'
- 4' CHAIN SUSPENDED LED STRIP
- LIGHT FIXTURE 2' X 2'
- SPRINKLER HEAD
- EXIT SIGNS
- RECESSED LED LIGHTS
- LIGHT BOLLARDS

UNOFFICIAL SET

NOT FOR BIDDING

SEALED BY

DINEEN BOLLING WEST REGISTERED ARCHITECT AGRICULTURE COMMERCE No. 100087 STATE OF TENNESSEE

6-20-14

REFLECTED CEILING PLAN - FIRST FLOOR

SCALE: 1/8" = 1'-0"

GRAPHIC SCALE 1/8" = 1'-0"

0' 5' 10' 15'

PLAN NORTH

TRUE NORTH

Cain Rash West Architects

Architectural Services

130 Regional Park Dr.
Kingsport, TN 37660
Phn (423) 349-7760
Fax (423) 349-7413
www.grcinc.com

STATE OF TENNESSEE

DEPARTMENT OF TRANSPORTATION

1ST FLOOR RCP PLAN
PEDESTRIAN BRIDGE
OVER WILCOX DRIVE
BR. I.D. NO.
82SR1260017

U- 64- 169

plotted on: 6/19/2014 9:31:48 AM

SULLIVAN CO EASTMAN - PROJECT # 82085-3236-04 SHEET LABEL:

checked WEST

drawn DARNELL

6/19/2014 9:31:48 AM

PROJECT NO.	YEAR	SHEET NO.
STP - 126(19)	2014	105

REVISIONS

NO.	DATE	BY	DESCRIPTION
2	7/23/14	DARNELL	UPDATED CEILING TILE

REFLECTED CEILING NOTES

1. CEILING SPOT ELEVATIONS INDICATED ON PLAN DENOTE HEIGHT ABOVE FINISHED FLOOR.
2. UNLESS OTHERWISE NOTED ON DRAWINGS, SUSPENDED ACOUSTICAL CEILING GRID SHALL BE CENTERED WITHIN SPACE.
3. ACOUSTICAL CEILING INSTALLATION SHALL BE COORDINATED WITH ALL OTHER TRADES PRIOR TO COMMENCEMENT OF WORK.
4. REFER TO ENGINEERING SHEETS FOR FULL SPRINKLER, LIGHTING, AND HVAC LAYOUTS AND SPECIFICATIONS. SOME ITEMS MAY NOT BE SHOWN ON THIS DRAWING.

CEILING LEGEND

- CEILING CLOUD WITH REVEALS
- HVAC SUPPLY DIFFUSER
- LIGHT FIXTURE 2' X 4'
- 4' CHAIN SUSPENDED LED STRIP
- LIGHT FIXTURE 2' X 2'
- SPRINKLER HEAD
- EXIT SIGNS
- RECESSED LED LIGHTS
- LIGHT BOLLARDS

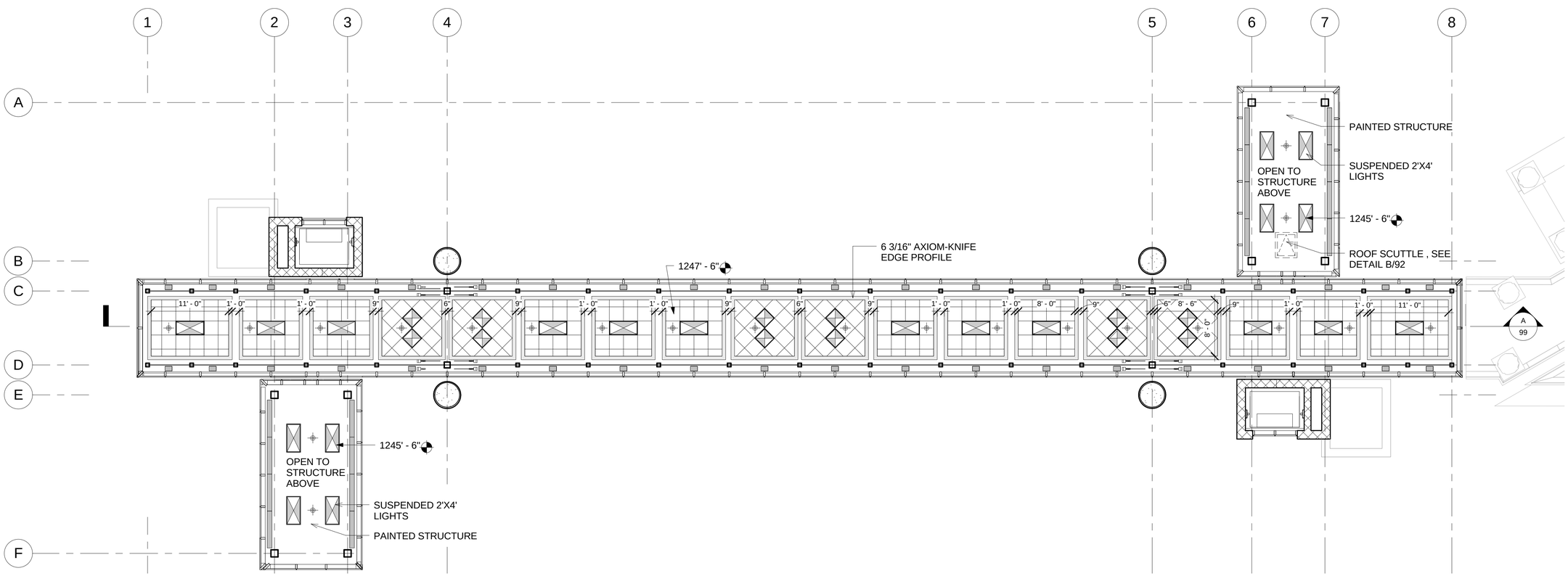

REFLECTED CEILING PLAN - BRIDGE LEVEL

SCALE: 1/8" = 1'-0"

0' 5' 10' 15'
GRAPHIC SCALE
1/8" = 1'-0"

PLAN NORTH
TRUE NORTH

UNOFFICIAL SET
NOT FOR BIDDING

SEALED BY

DINEEN BOLLING WEST
REGISTERED ARCHITECT
AGRICULTURE
COMMERCE
No. 100987
STATE OF TENNESSEE

Cain Rash West
Architects
Architectural Services
130 Regional Park Dr.
Kingsport, TN 37660
Phn (423) 349-7760
Fax (423) 349-7413
www.grcinc.com

STATE OF TENNESSEE
DEPARTMENT OF TRANSPORTATION

BRIDGE LEVEL RCP
PEDESTRIAN BRIDGE
OVER WILCOX DRIVE
BR. I.D. NO.
82SR1260017

U- 64 -170

7/23/2014 2:56:04 PM

plotted on: 7/23/2014 2:56:04 PM
SULLIVAN CO EASTMAN - PROJECT # 82085-3236-04 SHEET LABEL:

checked	WEST
drawn	DARNELL

PROJECT NO.	YEAR	SHEET NO.
STP - 126(19)	2014	106

REVISIONS

NO.	DATE	BY	DESCRIPTION

FLOOR PLAN - FIRST FLOOR

SCALE: 1/8" = 1'-0"

0' 5' 10' 15'
GRAPHIC SCALE
1/8" = 1'-0"

KEY NOTES:

1. INSTALL CONDENSERS ON 8"W x 18" TALL CONCRETE CURBS. PROVIDE ANCHOR BOLTS PER MANUFACTURER'S INSTRUCTIONS. REFER TO ARCHITECTURAL AND STRUCTURAL DRAWINGS FOR DETAILS.
2. PROVIDE PIPE SLEEVE IN WALL TO ACCOMMODATE REFRIGERANT PIPING.

PLAN NORTH
TRUE NORTH

UNOFFICIAL SET

NOT FOR BIDDING

SEALED BY

WALTER W. LAW, JR.
REGISTERED ENGINEER
No. 0101054
COMMERCIAL
STATE OF TENNESSEE
6-20-14

I.C. Thomasson Associates Inc.
1114 Clinch Avenue, Suite 200
Knoxville, Tn 37916
865-525-3488 fax: 865-525-4471
ICT JOB No. 140003.90

STATE OF TENNESSEE
DEPARTMENT OF TRANSPORTATION

FIRST FLOOR PLAN
PEDESTRIAN BRIDGE
OVER WILCOX DRIVE
BR. I.D. NO.
82SR1260017

U-64-171

checked W. Law
drawn M. Estep

G:\DGN\140003.90\MECH\140003.9-M11.dwg -- Wednesday, June 18, 2014, 4:30pm -- Copyright 2014, I.C. Thomasson Associates Inc.
plotted on: June 18, 2014, 4:30pm
SULLIVAN CO EASTMAN - PROJECT # STP - 126(19) SHEET LABEL:

PROJECT NO.	YEAR	SHEET NO.
STP - 126(19)	2014	107

REVISIONS

NO.	DATE	BY	DESCRIPTION

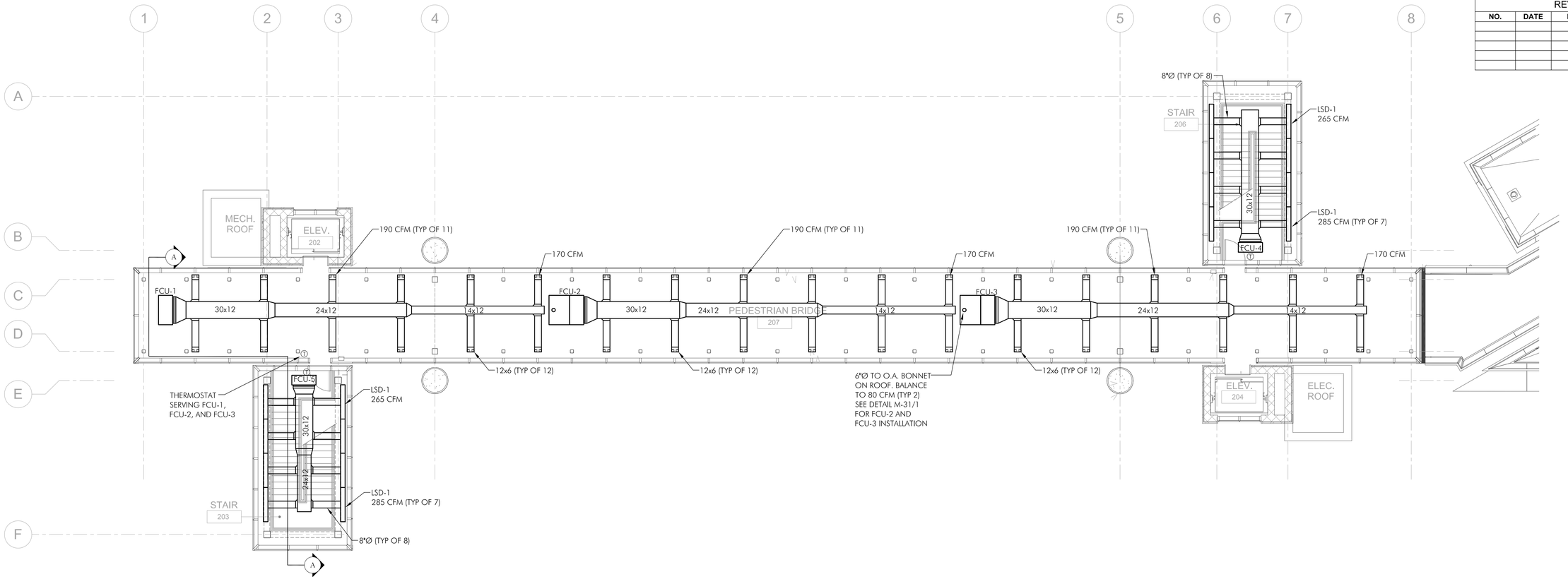

0' 5' 10' 15'
GRAPHIC SCALE
1/8" = 1'-0"

FLOOR PLAN - BRIDGE LEVEL

SCALE: 1/8" = 1'-0"

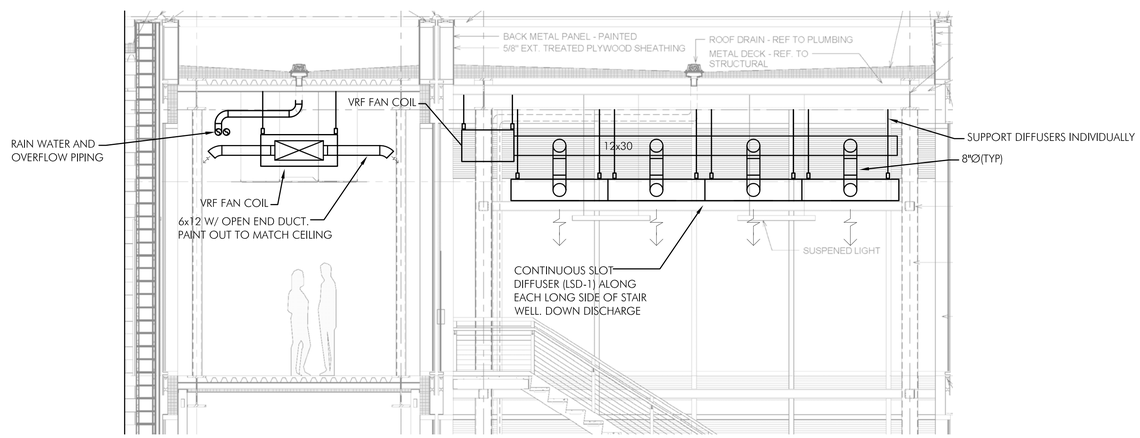

0' 1' 2' 4' 8'
GRAPHIC SCALE
1/4" = 1'-0"

BRIDGE SECTION A-A

SCALE: 1/4" = 1'-0"

PLAN NORTH
TRUE NORTH

UNOFFICIAL SET

NOT FOR BIDDING

SEALED BY

WALTER W. LAW, JR.
REGISTERED ENGINEER
AGENT FOR
6-20-14
No. 019186
STATE OF TENNESSEE

I.C. Thomasson Associates Inc.
1114 Clinch Avenue, Suite 200
Knoxville, Tn 37916
865-525-3488 fax: 865-525-4471
ICT JOB No. 140003.90

STATE OF TENNESSEE
DEPARTMENT OF TRANSPORTATION

BRIDGE FLOOR PLAN
PEDESTRIAN BRIDGE
OVER WILCOX DRIVE
BR. I.D. NO.
82SR1260017

U-64-172

checked	W. Law
drawn	M. Estep

G:\DGN\140003.90\MECH\140003.9-M12.dwg -- Wednesday June 18, 2014, 4:31pm -- Copyright 2014, I.C. Thomasson Associates Inc.
plotted on: June 18, 2014, 4:31pm
SULLIVAN CO EASTMAN - PROJECT # STP - 126(19) SHEET LABEL:

PROJECT NO.	YEAR	SHEET NO.
STP - 126(19)	2014	108

REVISIONS

NO.	DATE	BY	DESCRIPTION

VVRF FAN COIL UNIT SCHEDULE

MARK	SUPPLY AIR CFM	OUTSIDE AIR CFM	E.S.P.	COOLING (MBH)	HEATING (MBH)	SOUND (dBA)	ELECT. DATA	AMPS	UNIT WEIGHT (lbs)	TYPE	FLOOR SERVED	CU #	MFR. & MODEL NO.
FCU-1	2260	0	0.59	76.4	86.0	50	208/1Ø	4.5	192	CEILING CONCEALED (HIGH STATIC)	BRIDGE	1	LG ARNU763B8A2
FCU-2	2260	80	0.59	76.4	86.0	50	208/1Ø	4.5	192	CEILING CONCEALED (HIGH STATIC)	BRIDGE	1	LG ARNU763B8A2
FCU-3	2260	80	0.59	76.4	86.0	50	208/1Ø	4.5	192	CEILING CONCEALED (HIGH STATIC)	BRIDGE	1	LG ARNU763B8A2
FCU-4	2260	0	0.59	76.4	86.0	50	208/1Ø	4.5	192	CEILING CONCEALED (HIGH STATIC)	NORTH STAIR	2	LG ARNU763B8A2
FCU-5	2260	0	0.59	76.4	86.0	50	208/1Ø	4.5	192	CEILING CONCEALED (HIGH STATIC)	SOUTH STAIR	2	LG ARNU763B8A2

NOTES:
1. PROVIDE FIELD FABRICATED PLENUM; SEE DETAIL THIS DRAWING.
2. PROVIDE CONDENSATE PUMPS FOR ALL UNITS.

VARIABLE VOLUME REFRIGERANT FLOW CONDENSING UNIT (CU) SCHEDULE

MARK	COOLING			HEATING		ELECTRICAL			SOUND PRESSURE (dBA)	UNIT WEIGHT (LBS)	REFRIGERANT	MFR. & MODEL NO.	NOTES
	TOTAL CAPACITY (MBH)	AMBIENT TEMP (°F)	MIN. EER	CAPACITY MBH	AMBIENT TEMP (°F)	VOLTAGE	MCA	MOCP					
CU-1	216.0	95°F	11.2	243.0	47°F	460/3Ø	16.7/31.6	25.0/40.0	62	1058	R-410A	LG ARUN072DTE4/ LG ARUN144DTE4	ASSOCIATED WITH FCU-1/2/3
CU-2	144.0	95°F	11.5	162.0	47°F	460/3Ø	31.6	40.0	59.5	628	R-410A	LG ARUN144DTE4	ASSOCIATED WITH FCU-4/5

ELECTRIC HEATER SCHEDULE

MARK	TYPE	WATTS	VOLTAGE	SERVICE	MANUFACTURER / MODEL	NOTES
EWH-1,2	HEAVY DUTY FORCED AIR WALL HEATER	750	120/1Ø	MECH/ELEC. RMS.	MARKEL 3310	SURFACE MOUNT ENCLOSURE, BUILT IN TSTAT

AIR DISTRIBUTION SCHEDULE

MARK	SERVICE	MANUFACTURER / MODEL	DESCRIPTION	SIZING	ACCESSORIES
LSD-1	LINEAR SLOT DIFFUSER	TITUS MPI-39	ML TYPE SLOT DIFFUSER WITH INSULATED PLENUM; 1 WAY THROW; ALUMINUM SLOT, STEEL PLENUM	1" SLOT, 2 SLOTS, 60" LENGTH; CFM AS NOTED	OVAL INLET; DAMPER AT INLET

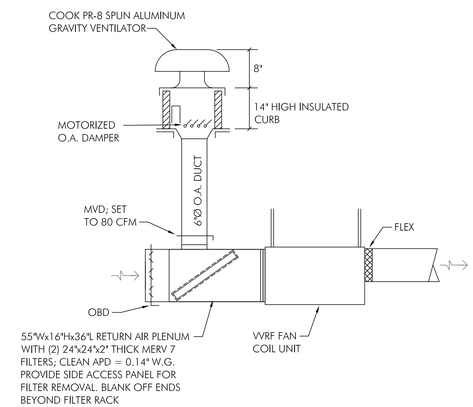

DETAIL: FCU-2 AND FCU-3 INSTALLATION

SCALE: NTS

NOTES:
1. INSULATE RETURN PLENUM W/ INTERNAL LINING.
2. INSULATE O.A. DUCT W/ FIBERGLASS DUCT WRAP.

CU-1

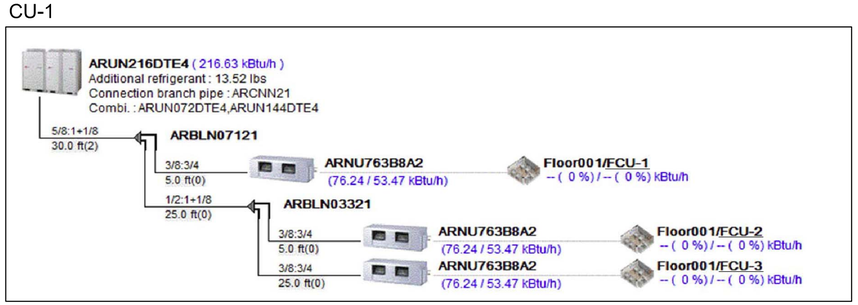

CU-2

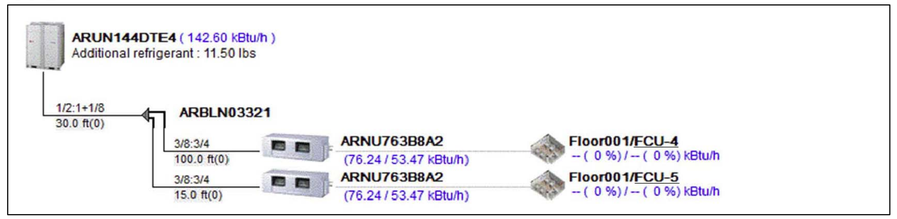

UNOFFICIAL SET

NOT FOR BIDDING

SEALED BY

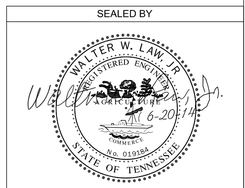

I.C. Thomasson Associates Inc.
1114 Clinch Avenue, Suite 200
Knoxville, Tn 37916
865-525-3488 fax: 865-525-4471
ICT JOB No. 140003.90

STATE OF TENNESSEE

DEPARTMENT OF TRANSPORTATION

SCHEDULES AND DETAILS
PEDESTRIAN BRIDGE OVER WILCOX DRIVE
BR. I.D. NO. 82SR1260017

U-64-173

checked W. Law
drawn M. Estep

G:\DGN\140003.90\MECH\140003.9-M31.dwg -- Wednesday June 18, 2014, 4:31pm -- Copyright 2014, I.C. Thomasson Associates Inc.

plotted on: June 18, 2014, 4:31pm

SULLIVAN CO EASTMAN - PROJECT # STP - 126(19) SHEET LABEL:

PROJECT NO.	YEAR	SHEET NO.
STP - 126(19)	2014	109

REVISIONS

NO.	DATE	BY	DESCRIPTION

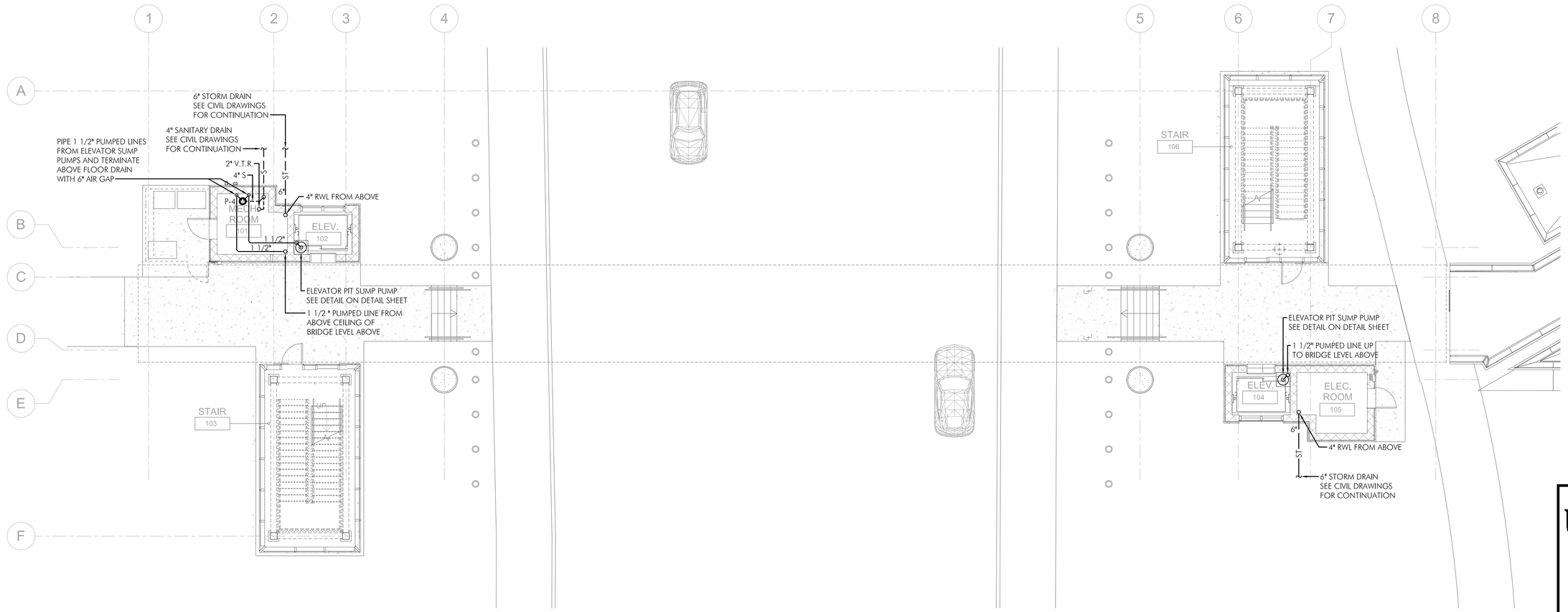

UNOFFICIAL SET

NOT FOR BIDDING

0' 5' 10' 15'

GRAPHIC SCALE
1/8" = 1'-0"

FLOOR PLAN - FIRST FLOOR

SCALE: 1/8" = 1'-0"

PLAN NORTH

TRUE NORTH

SEALED BY

WALTER W. LAW JR.
REGISTERED ENGINEER
No. 010158
STATE OF TENNESSEE

checked W. Law

drawn W. Sullivan

I.C. Thomasson Associates Inc.
1114 Clinch Avenue, Suite 200
Knoxville, Tn 37916
865-525-3488 fax: 865-525-4471
ICT JOB No. 140003.90

STATE OF TENNESSEE

DEPARTMENT OF TRANSPORTATION

FIRST FLOOR PLAN
PEDESTRIAN BRIDGE
OVER WILCOX DRIVE
BR. I.D. NO.
82SR1260017

U-64-174

G:\DGN\140003.90\PLUM\140003.9-P11.dwg -- Wednesday June 18, 2014, 5:35pm -- Copyright 2014, I.C. Thomasson Associates Inc.

plotted on: June 18, 2014, 5:35pm

SULLIVAN CO EASTMAN - PROJECT # STP - 126(19) SHEET LABEL:

PROJECT NO.	YEAR	SHEET NO.
STP - 126(19)	2014	110

REVISIONS

NO.	DATE	BY	DESCRIPTION

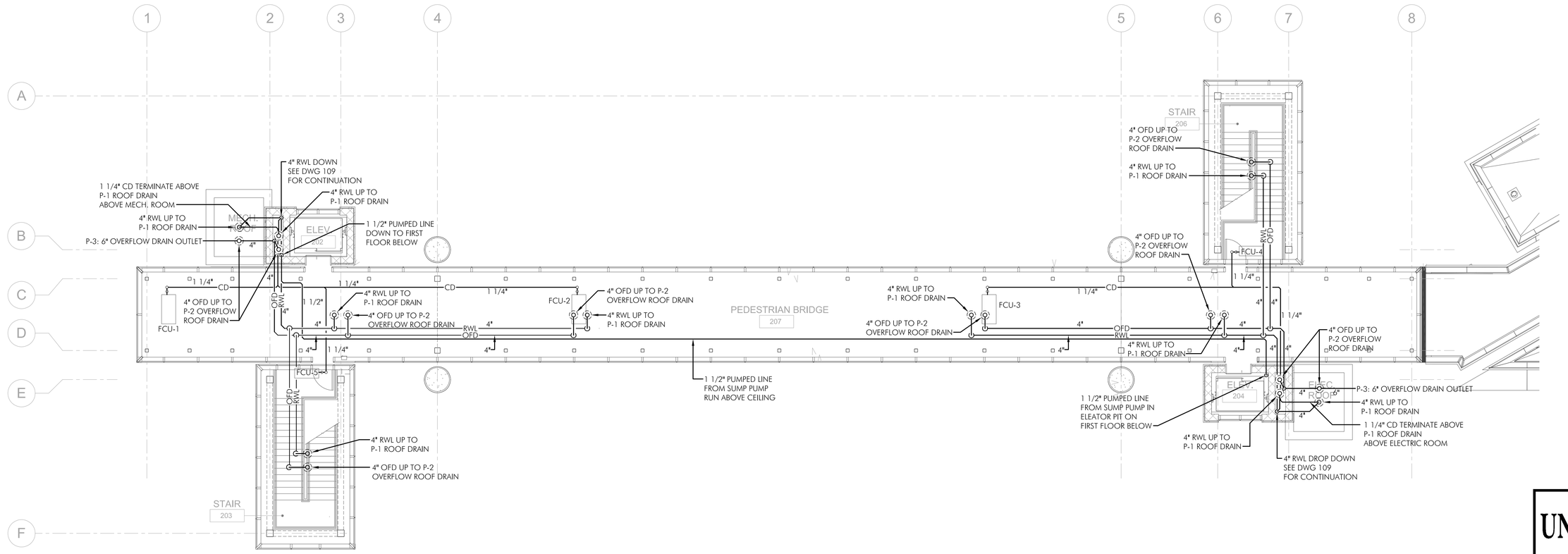

UNOFFICIAL SET

NOT FOR BIDDING

0' 5' 10' 15'

GRAPHIC SCALE
1/8" = 1'-0"

FLOOR PLAN - BRIDGE LEVEL

SCALE: 1/8" = 1'-0"

PLAN NORTH

TRUE NORTH

SEALED BY

WALTER W. LAW JR.
REGISTERED ENGINEER
AGRICULTURE
COMMERCE
No. 015188
STATE OF TENNESSEE
6-20-14

checked W. Law

drawn W. Sullivan

I.C. Thomasson Associates Inc.
1114 Clinch Avenue, Suite 200
Knoxville, Tn 37916
865-525-3488 fax: 865-525-4471
ICT JOB No. 140003.90

STATE OF TENNESSEE

DEPARTMENT OF TRANSPORTATION

BRIDGE FLOOR PLAN
PEDESTRIAN BRIDGE
OVER WILCOX DRIVE
BR. I.D. NO.
82SR1260017

U-64-175

G:\DGN\140003.90\PLUM\140003.9-P12.dwg -- Wednesday June 18, 2014, 5:37pm -- Copyright 2014, I.C. Thomasson Associates Inc.

plotted on: June 18, 2014, 5:37pm

SULLIVAN CO EASTMAN - PROJECT # STP - 126(19) SHEET LABEL:

PROJECT NO.	YEAR	SHEET NO.
STP - 126(19)	2014	111

REVISIONS

NO.	DATE	BY	DESCRIPTION

PLUMBING LEGEND

SYMBOL	DESCRIPTION
S	SANITARY SEWER PIPING BELOW FLOOR SLAB AND/OR GRADE
S	SANITARY SEWER PIPING ABOVE FLOOR SLAB
ST	STORM SEWER PIPING BELOW FLOOR SLAB AND/OR GRADE
	SANITARY VENT PIPING
RWL	RAIN WATER LEADER PIPING
OFD	OVERFLOW DRAIN PIPING
CD	CONDENSATE DRAIN PIPING
	PIPE RISE
	PIPE DROP
S	SANITARY SEWER
ST	STORM SEWER
RWL	RAIN WATER LEADER
OFD	OVERFLOW DRAIN
CD	CONDENSATE DRAIN
V.T.R.	VENT THRU ROOF

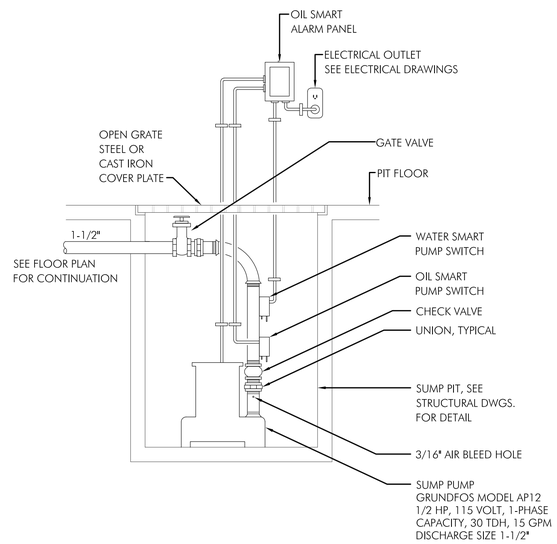

ELEVATOR SUMP PUMP DETAIL

SCALE: NONE

FIXTURE CONNECTION SCHEDULE

"P" NO.	TYPE	MFR. & MODEL	H.W.	C.W.	WASTE	DESCRIPTION
P-1	ROOF DRAIN, 15" DIAMETER	ZURN ZA-100-DP-DR	---	---	4"	ROOF DRAIN, ALUMINUM DOME, UNDERDECK CLAMP, SUMP RECEIVER, ADJUSTABLE DRAIN RISER EXTENSION ASSEMBLY. ADD-XJ, VERTICAL EXPANSION, AS REQUIRED
P-2	ROOF DRAIN, OVERFLOW	ZURN ZA-100-W3-DP-DR	---	---	4"	ROOF DRAIN, ALUMINUM DOME, UNDERDECK CLAMP, SUMP RECEIVER, ADJUSTABLE DRAIN RISER EXTENSION ASSEMBLY, INTERNAL 3" DAM
P-3	OVERFLOW DRAIN NOZZLE	ZURN ZARB 100-SS	---	---	6"	OVERFLOW DRAIN OUTLET, ALL PLAIN BRONZE BODY, REMOVABLE STAINLESS SCREEN
P-4	FLOOR DRAIN	ZURN ZN-541	---	---	4"	MECHANICAL ROOM FLOOR DRAIN, ROUND STRAINER, NICKEL BRONZE TOP, SEDIMENT BUCKET.

UNOFFICIAL SET

NOT FOR BIDDING

SEALED BY

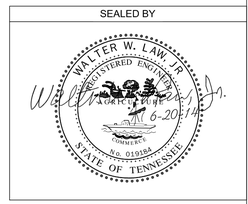

I.C. Thomasson Associates Inc.
1114 Clinch Avenue, Suite 200
Knoxville, Tn 37916
865-525-3488 fax: 865-525-4471
ICT JOB No. 140003.90

STATE OF TENNESSEE

DEPARTMENT OF TRANSPORTATION

LEGEND, SCHEDULES & DETAILS
PEDESTRIAN BRIDGE OVER WILCOX DRIVE
BR. I.D. NO. 82SR1260017

U-64-176

checked W. Law

drawn W. Sullivan

G:\DGN\140003.90\PLUM\140003.9-P31.dwg -- Wednesday, June 18, 2014, 5:34pm -- Copyright 2014, I.C. Thomasson Associates Inc.

plotted on: June 18, 2014, 5:34pm

SULLIVAN CO EASTMAN - PROJECT # STP - 126(19) SHEET LABEL:

PROJECT NO.	YEAR	SHEET NO.
STP - 126(19)	2014	112

REVISIONS

NO.	DATE	BY	DESCRIPTION

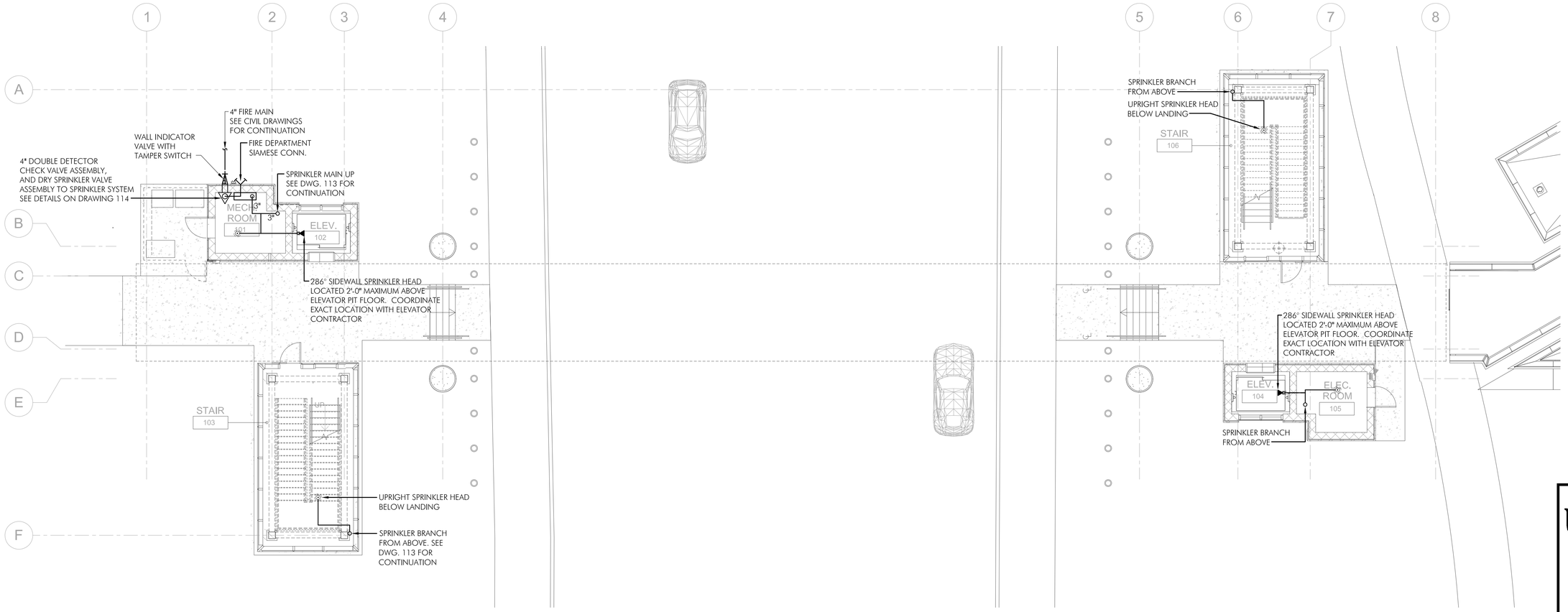

UNOFFICIAL SET

NOT FOR BIDDING

0' 5' 10' 15'

GRAPHIC SCALE
1/8" = 1'-0"

FLOOR PLAN - FIRST FLOOR

SCALE: 1/8" = 1'-0"

PLAN NORTH

TRUE NORTH

SEALED BY

WALTER W. LAW, JR.
REGISTERED ENGINEER
No. 010184
STATE OF TENNESSEE
6-20-14

checked W. Law

drawn W. Sullivan

I.C. Thomasson Associates Inc.
1114 Clinch Avenue, Suite 200
Knoxville, Tn 37916
865-525-3488 fax: 865-525-4471
ICT JOB No. 140003.90

STATE OF TENNESSEE

DEPARTMENT OF TRANSPORTATION

FIRST FLOOR PLAN
PEDESTRIAN BRIDGE
OVER WILCOX DRIVE
BR. I.D. NO.
82SR1260017

U-64-177

G:\DGN\140003.90\PLUM\140003.9-FP11.dwg -- Wednesday June 18, 2014, 5:33pm -- Copyright 2014, I.C. Thomasson Associates Inc.

plotted on: June 18, 2014, 5:33pm

SULLIVAN CO EASTMAN - PROJECT # STP - 126(19) SHEET LABEL:

PROJECT NO.	YEAR	SHEET NO.
STP - 126(19)	2014	113

REVISIONS

NO.	DATE	BY	DESCRIPTION

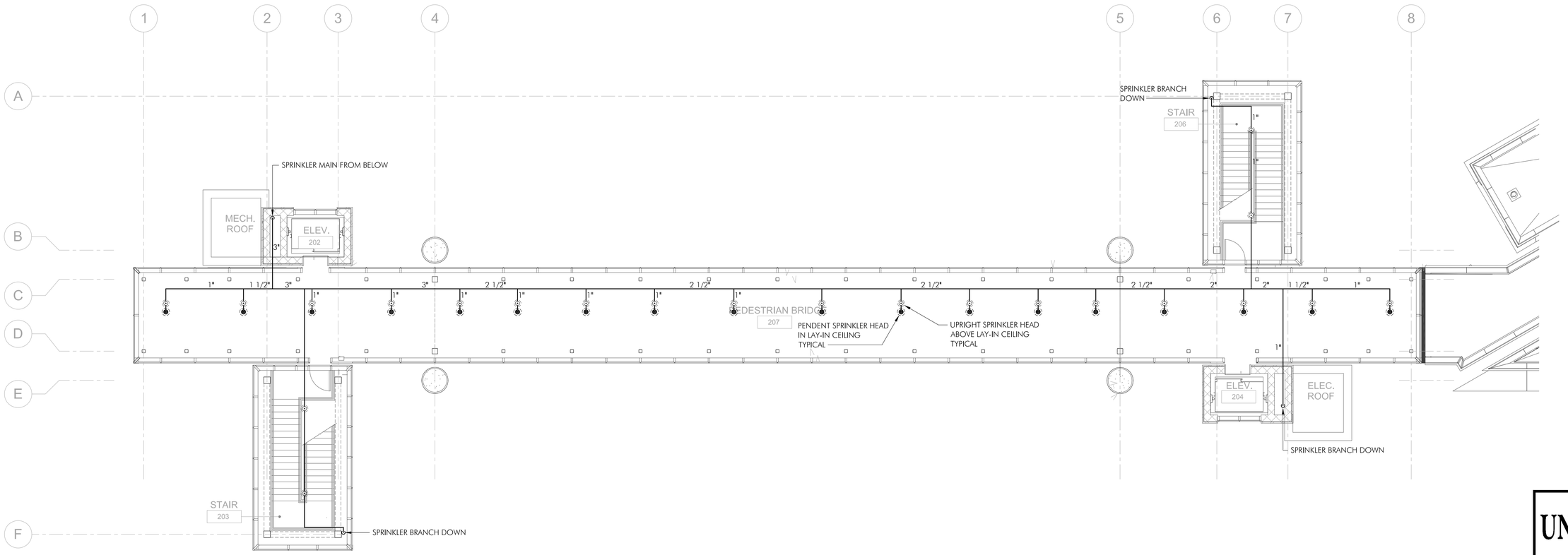

UNOFFICIAL SET

NOT FOR BIDDING

0' 5' 10' 15'

GRAPHIC SCALE
1/8" = 1'-0"

FLOOR PLAN - BRIDGE LEVEL

SCALE: 1/8" = 1'-0"

PLAN NORTH

TRUE NORTH

SEALED BY

WALTER W. LAW, JR. REGISTERED ENGINEER AGRICULTURE No. 01918 STATE OF TENNESSEE

6-20-14

I.C. Thomasson Associates Inc.
1114 Clinch Avenue, Suite 200
Knoxville, Tn 37916
865-525-3488 fax: 865-525-4471
ICT JOB No. 140003.90

STATE OF TENNESSEE

DEPARTMENT OF TRANSPORTATION

BRIDGE FLOOR PLAN
PEDESTRIAN BRIDGE
OVER WILCOX DRIVE
BR. I.D. NO.
82SR1260017

U-64-178

checked W. Law

drawn W. Sullivan

G:\DGN\140003.90\PLUM\140003.9-FP12.dwg -- Wednesday June 18, 2014, 5:33pm -- Copyright 2014, I.C. Thomasson Associates Inc.

plotted on: June 18, 2014, 5:33pm

SULLIVAN CO EASTMAN - PROJECT # STP - 126(19) SHEET LABEL:

PROJECT NO.	YEAR	SHEET NO.
STP - 126(19)	2014	114

REVISIONS

NO.	DATE	BY	DESCRIPTION

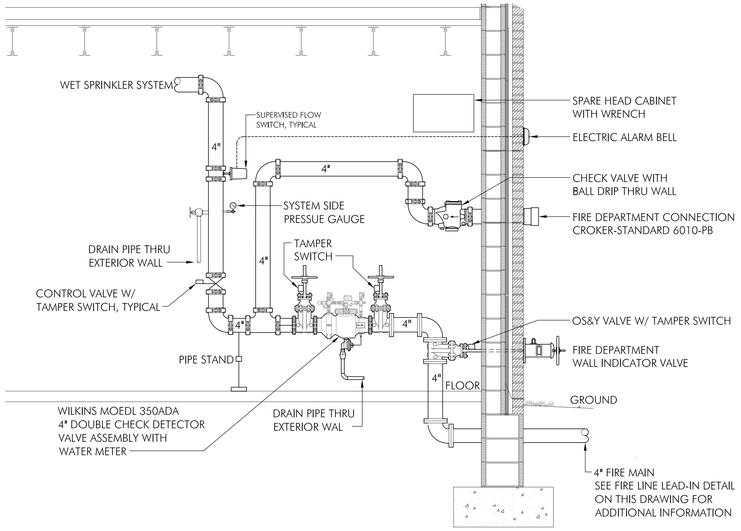

DRY SPRINKLER SYSTEM DIAGRAM

SCALE: NONE

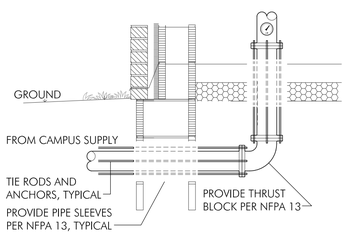

FIRE LINE LEAD-IN DETAIL

SCALE: NONE

AREA OF BEARING FACE OF CONCRETE THRUST BLOCKS SCH.

PIPE SIZE	SQ.FT. DUCTILE IRON 45°(1/8) BEND	SQ.FT. DUCTILE IRON 90°(1/4) BEND	SQ.FT. DUCTILE IRON TEES, PLUGS, CAPS & HYDRANTS	SQ.FT. PVC 45°(1/8) BEND	SQ.FT. PVC 90°(1/4) BEND	SQ.FT. PVC TEES, PLUGS, CAPS & HYDRANTS
4"	2	3	3	2	3	3
6"	4	7	5	4	7	5
8"	6	11	8	6	12	8
10"	9	17	12	10	19	13
12"	13	24	17	15	27	19
14"	18	32	23	20	37	26
16"	23	42	30	26	47	33
18"	29	53	37	36	68	48
20"	35	65	46	46	84	29
24"	50	92	66	61	122	86

BASIS: 2,000 PSF SOIL RESISTANCE
250 PSI WATER PRESSURE

FOR CORRECTION FACTORS FOR OTHER SOILS. REFER TO NFPA 24 APPENDIX A.

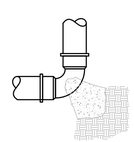

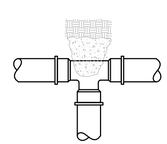

checked W. Law

drawn W. Sullivan

PRELIMINARY SPRINKLER HYDRAULICS

PROJECT: Pedestrain Bridge Over Wilcox Drive
BR. I.D. No. 82SR1260017

FIRM: I. C. Thomasson, Inc.
1114 Clinch Avenue, Suite 200
Knoxville, Tennessee 37916

DESIGNER: WRS
ENGINEER: WWI
DATE: 18 JUNE 2014

Sprinkler System Calculations:

A. Total Calculated Flow (LIGHT HAZARD): 250 GPM
(Density) 0.10 gpm/sq. ft. x (Calculated Area) 1500 sq. ft. +
(Hose) 100 gpm

B. Residual City Water Pressure Available at Main: 115 PSI

C. Static Head Loss From City Main To Building (ft x .433 psi/ft) 2 PSI
(Elevation Difference Between Test Fire Hydrant and
Base of Riser = 4.5 feet)

D. Pipe Friction Loss From Test Hydrant to Building: 1.25 PSI
(500 feet x 0.25 psi / 100ft)

E. Pressure Loss Thru Backflow Preventer: 10 PSI

F. Pressure Available At Base of Riser [B-(C+D+E)]: 101.75 PSI

G. Static Head Loss (ft 33 x 0.433 psi/ft): 14.30 PSI
(Elevation Difference Between Base of Riser and
Highest Point of Sprinkler System = 33 feet)

H. Residual Pressure Required At Most Remote Connection: 15 PSI

I. Pipe Friction Loss From Base of Riser to Most Remote Connection: 9.2 PSI
(230 feet x 4 psi / 100ft)

J. Pressure Requirement at the Base of the Riser: (G+H+I) 38.5 PSI

K. Pressure Requirement for Sprinkler System: (C+D+E+J) 51.75 PSI

L. City Water Surplus Residual Pressure (B-K): 63.25 PSI

WATER FLOW TEST SUMMARY SHEET

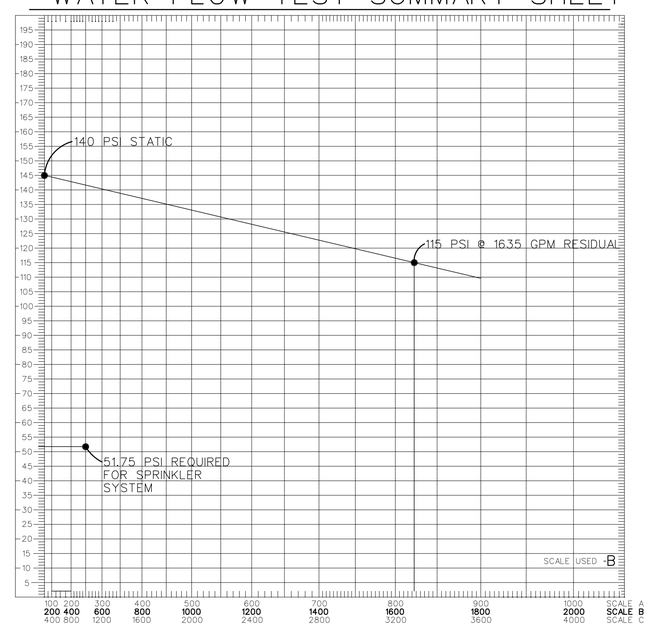

HYDRANT NO.	OUTLET (inches)	STATIC (psi)	RESIDUAL (psi)	PITOT (psi)	FLOW (gpm)	JOB NAME: Eastman Pedestrian Bridge
TEST HYD.:166	4.5	140	115	95	1635	DATE: 6/27/2013
						TEST BY: WATER SERVICES

FIRE PROTECTION SYMBOL LEGEND

SYMBOL	DESCRIPTION
—F—	FIRE LINE
—○—	PIPE RISE
—G—	PIPE DROP
	WALL INDICATOR VALVE
	SPRINKLER SYSTEM RISER ASSEMBLY
	SIAMESE FIRE DEPARTMENT CONNECTION
	SEMI-RECESSED SPRINKLER HEAD
	BRASS UP-RIGHT SPRINKLER HEAD

UNOFFICIAL SET

NOT FOR BIDDING

SEALED BY

WALTER W. LAW JR. REGISTERED ENGINEER No. 019186 STATE OF TENNESSEE 6-20-14

I.C. Thomasson Associates Inc.
1114 Clinch Avenue, Suite 200
Knoxville, Tn 37916
865-525-3488 fax: 865-525-4471
ICT JOB No. 140003.90

STATE OF TENNESSEE
DEPARTMENT OF TRANSPORTATION

LEGEND, SCHEDULES & DETAILS
PEDESTRIAN BRIDGE OVER WILCOX DRIVE
BR. I.D. NO. 82SR1260017

U-64-179

G:\DGN\140003.90\PLUM\140003.9-FP31.dwg -- Wednesday June 18, 2014, 5:34pm -- Copyright 2014, I.C. Thomasson Associates Inc.
plotted on: June 18, 2014, 5:34pm
SULLIVAN CO EASTMAN - PROJECT # STP - 126(19) SHEET LABEL:

PROJECT NO.	YEAR	SHEET NO.
STP - 126(19)	2014	115

REVISIONS

NO.	DATE	BY	DESCRIPTION

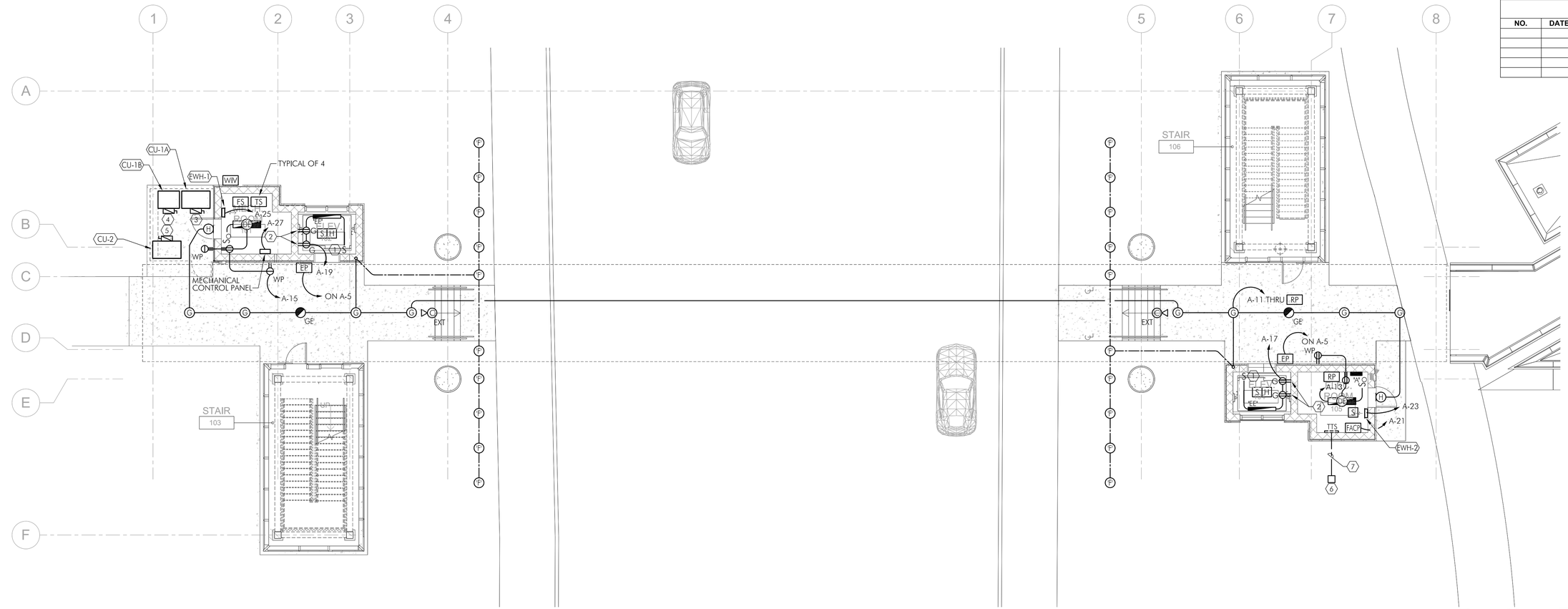

FLOOR PLAN - FIRST FLOOR

SCALE: 1/8" = 1'-0"

GRAPHIC SCALE 1/8" = 1'-0"

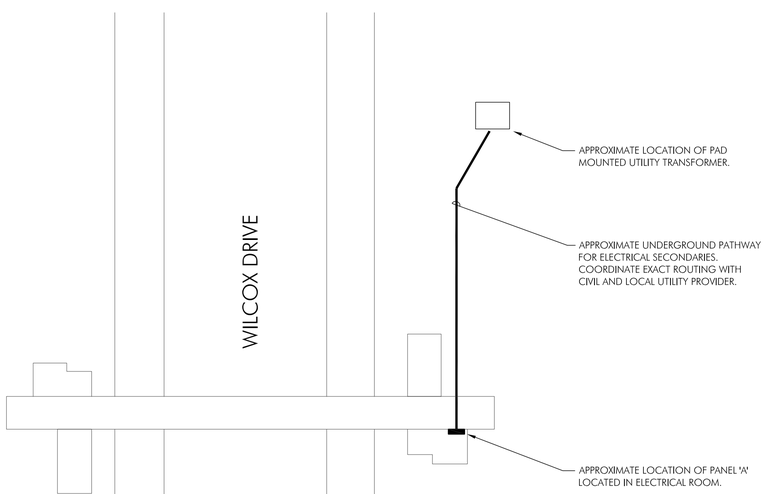

SITE PLAN

SCALE: 1" = 30'-0"

GRAPHIC SCALE 1" = 30'-0"

PLAN NORTH

TRUE NORTH

FIXTURE QUANTITIES	
TYPE	QUANTITY
A	0
AE	0
B	0
C	0
CE	0
DE	2
EE	2
F	20
G	8
GE	2
H	2
X	0

KEY NOTES

1. COORDINATE EXACT LIGHT SWITCH LOCATION WITH ELEVATOR PROVIDER PRIOR TO ROUGH-IN.
2. COORDINATE EXACT LOCATION OF CONVENIENCE RECEPTACLE AND RECEPTACLE FOR ELEVATOR SUMP PUMP WITH ELEVATOR PROVIDER PRIOR TO ROUGH-IN.
3. NEMA-3R 40A FUSED DISCONNECT, CIRCUIT TO A-14. CONTRACTOR SHALL PROVIDE COMMUNICATION WIRING/CONDUIT AS REQUIRED BETWEEN INDOOR AND OUTDOOR UNITS. COORDINATE EXACT LOCATION OF DISCONNECT AND COMMUNICATION WIRING REQUIREMENTS WITH MECHANICAL PRIOR TO ROUGH-IN.
4. NEMA-3R 60A FUSED DISCONNECT, CIRCUIT TO A-20. CONTRACTOR SHALL PROVIDE COMMUNICATION WIRING/CONDUIT AS REQUIRED BETWEEN INDOOR AND OUTDOOR UNITS. COORDINATE EXACT LOCATION OF DISCONNECT AND COMMUNICATION WIRING REQUIREMENTS WITH MECHANICAL PRIOR TO ROUGH-IN.
5. NEMA-3R 60A FUSED DISCONNECT, CIRCUIT TO A-26. CONTRACTOR SHALL PROVIDE COMMUNICATION WIRING/CONDUIT AS REQUIRED BETWEEN INDOOR AND OUTDOOR UNITS. COORDINATE EXACT LOCATION OF DISCONNECT AND COMMUNICATION WIRING REQUIREMENTS WITH MECHANICAL PRIOR TO ROUGH-IN.
6. UTILITY PROVIDED AND INSTALLED HAND HOLE. COORDINATE EXACT LOCATION WITH UTILITY PROVIDER.
7. ONE (1) 2" CONDUIT WITH PULL STRING FROM UTILITY PROVIDED AND INSTALLED HAND HOLE TO TTS. COORDINATE ALL WORK WITH UTILITY PROVIDER.

UNOFFICIAL SET

NOT FOR BIDDING

SEALED BY

KENNETH B. BLALOCK REGISTERED ENGINEER AGENT TENNESSEE No. 107685 STATE OF TENNESSEE

Kenneth B. Blalock 06-20-14

I.C. Thomasson Associates Inc.
1114 Clinch Avenue, Suite 200
Knoxville, Tn 37916
865-525-3488 fax: 865-525-4471
ICT JOB No. 140003.90

STATE OF TENNESSEE

DEPARTMENT OF TRANSPORTATION

FIRST FLOOR PLAN
PEDESTRIAN BRIDGE
OVER WILCOX DRIVE
BR. I.D. NO.
82SR1260017

U-64-180

checked K. Blalock

drawn S. Estep

G:\DGN\140003.90\ELEC\140003.9-E11.dwg -- Wednesday June 18, 2014, 4:39pm -- Copyright 2014, I.C. Thomasson Associates Inc.

plotted on: June 18, 2014, 4:39pm

SULLIVAN CO EASTMAN - PROJECT # STP - 126(19) SHEET LABEL:

PROJECT NO.	YEAR	SHEET NO.
STP - 126(19)	2014	116

REVISIONS

NO.	DATE	BY	DESCRIPTION

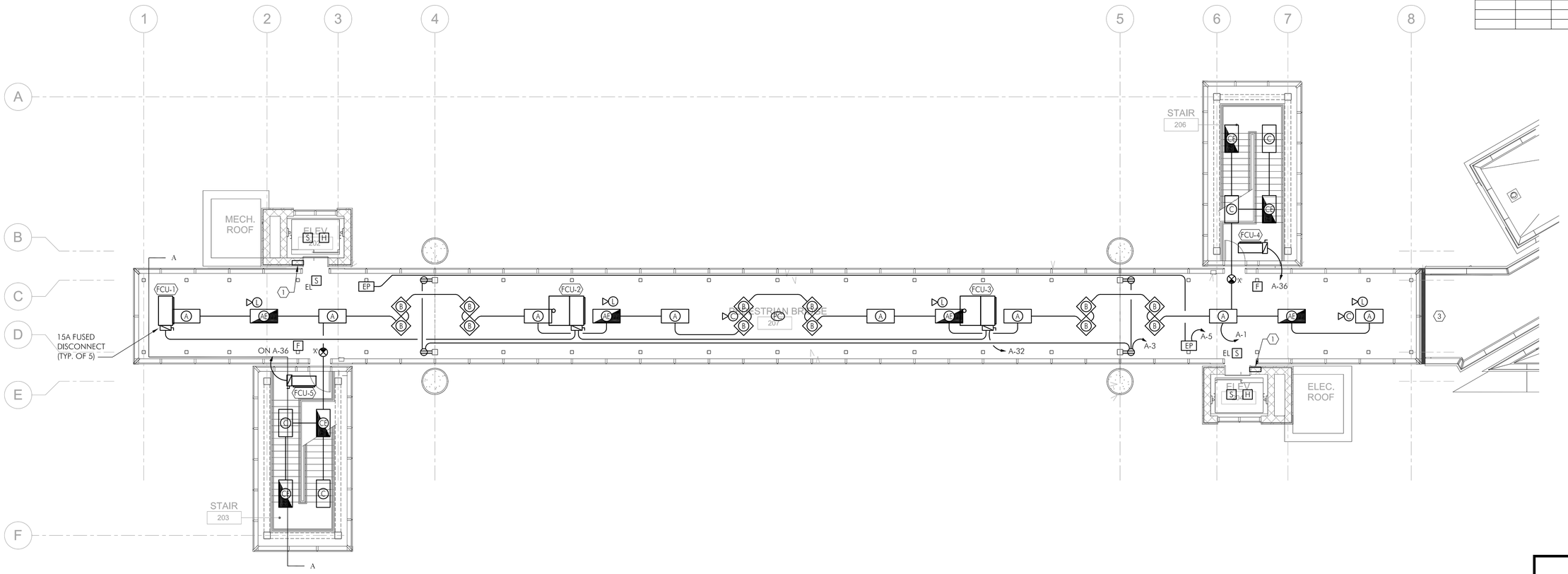

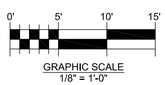

FLOOR PLAN - BRIDGE LEVEL

SCALE: 1/8" = 1'-0"

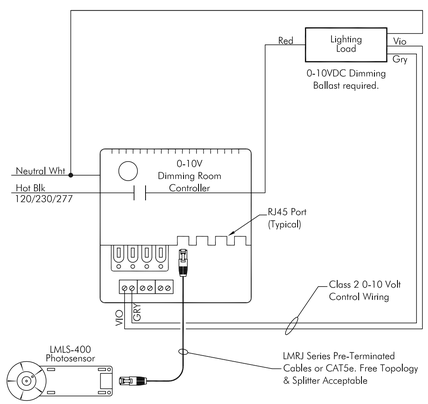

PHOTOCELL DETAIL

SCALE: NONE

FIXTURE QUANTITIES	
TYPE	QUANTITY
A	8
AE	4
B	12
C	4
CE	4
DE	0
EE	0
F	0
G	0
GE	0
H	0
X	2

KEY NOTES

1. APPROXIMATE LOCATION OF ELEVATOR CONTROLLER. CONTRACTOR SHALL ROUTE 3-PHASE ELEVATOR POWER, 120V CAR LIGHT/ALARM POWER, FIRE ALARM AND PHONE TO THE TOP OF THE CONTROLLER. REFER TO RISER DIAGRAM FOR ADDITIONAL INFORMATION. COORDINATE ALL WORK WITH ELEVATOR VENDOR PRIOR TO ROUGH-IN.
2. CONTRACTOR SHALL PROVIDE RACEWAYS AND WIRE AS REQUIRED BETWEEN ELEVATOR SHAFT AND ELEVATOR MONITORING PANELS. COORDINATE ALL WORK WITH ELEVATOR VENDOR PRIOR TO ROUGH-IN.
3. CONTRACTOR SHALL PULL COILED CAT 6 CABLE PROVIDED BY EASTMAN FROM UNDERFLOOR IN CONNECTOR BRIDGE TO 'TTS' ON GROUND LEVEL VIA CONDUIT CONNECTING UNDERFLOOR CONNECTOR TO UNDERFLOOR BRIDGE.

PLAN NORTH

TRUE NORTH

UNOFFICIAL SET

NOT FOR BIDDING

SEALED BY

I.C. Thomasson Associates Inc.
1114 Clinch Avenue, Suite 200
Knoxville, Tn 37916
865-525-3488 fax: 865-525-4471
ICT JOB No. 140003.90

STATE OF TENNESSEE

DEPARTMENT OF TRANSPORTATION

BRIDGE FLOOR PLAN
PEDESTRIAN BRIDGE
OVER WILCOX DRIVE
BR. I.D. NO.
82SR1260017

U-64-181

checked	K. Blalock
drawn	S. Estep

G:\DGN\140003.90\ELEC\140003.9-E12.dwg -- Wednesday June 18, 2014, 4:27pm -- Copyright 2014, I.C. Thomasson Associates Inc.

plotted on: June 18, 2014, 4:27pm

SULLIVAN CO EASTMAN - PROJECT # STP - 126(19) SHEET LABEL:

Panel	A	OC Type	400A M.B.	Voltage L-L	208
Device		Enclosure	NEMA 1	Voltage L-N	120
Mounting	SURFACE	Comments		Amperage	400

Ckt No.	Description	Type	Load	Wire/Conduit	CB	Pole	PH	PH	Pole	CB	Wire/Conduit	Load	Type	Description	Ckt No.
1	LIGHTS @ BRIDGE LVL	1	1280	3#10-3/4"C	20	1	A	A	3	125	REFER TO RISER	8166	10	ELEVATOR	2
3	RECEPS @ BRIDGE LVL	3	720	3#10-3/4"C	20	1	B	B	-	125		8166	10		4
5	EMERGENCYPHONES	5	50	3#10-3/4"C	20	1	C	C	-	125		8166	10		6
7	ELEVATOR LIGHTS/ALARM	5	1500	REFER TO RISER	20	1	A	A	3	125	REFER TO RISER	8166	9	ELEVATOR	8
9	ELEVATOR LIGHTS/ALARM	5	1500	REFER TO RISER	20	1	B	B	-	125		8166	9		10
11	LIGHTS @ EXTERIOR	1	850	3#10-3/4"C	20	1	C	C	-	125		8166	9		12
13	LIGHTS/REC @ ELEC RM	1	410	3#12-3/4"C	20	1	A	A	3	40	4#6 & 1#10G	3038	9	CU-1A	14
15	LIGHTS/REC @ MECH RM	1	590	3#10-3/4"C	20	1	B	B	-	40	1"C	3038	9		16
17	LIGHTS/REC @ ELEV PIT	1	440	3#12-3/4"C	20	1	C	C	-	40		3038	9		18
19	LIGHTS/REC @ ELEV PIT	1	440	3#10-3/4"C	20	1	A	A	3	60	4#4 & 1#8G	5860	9	CU-1B	20
21	FIRE ALARM CONTROL PNL	5	1200	3#12-3/4"C	20	1	B	B	-	60	1 1/4"C	5860	9		22
23	UNIT HEATER	4	750	3#12-3/4"C	20	1	C	C	-	60		5860	9		24
25	UNIT HEATER	4	750	3#10-3/4"C	20	1	A	A	3	60	4#4 & 1#8G	5860	9	CU-2	26
27	MECH. CONTROL PANEL	5	1000	3#10-3/4"C	20	1	B	B	-	60	1 1/4"C	5860	9		28
29	SPARE				20	1	C	C	-	60		5860	9		30
31	SPARE				20	1	A	A	2	20	3#10-3/4"C	1404	9	FCU @ BRIDGE	32
33	SPARE				20	1	B	B	-	20		1404	9		34
35	SPARE				20	1	C	C	2	15	3#10-3/4"C	936	9	FCU @ STAIRS	36
37	TVSS				30	3	A	A	-	15		936	9		38
39					30	-	B	B	1	20				SPARE	40
41					30	-	C	C	1	20				SPARE	42

Phase A	37811 VA		
Phase B	37505 VA		
Phase C	34117 VA		
Total kVA=	109.4 Demand kVA		96.6
Total Amps	303.8 Demand Amps		268.2

PANEL SCHEDULE

SCALE: NONE

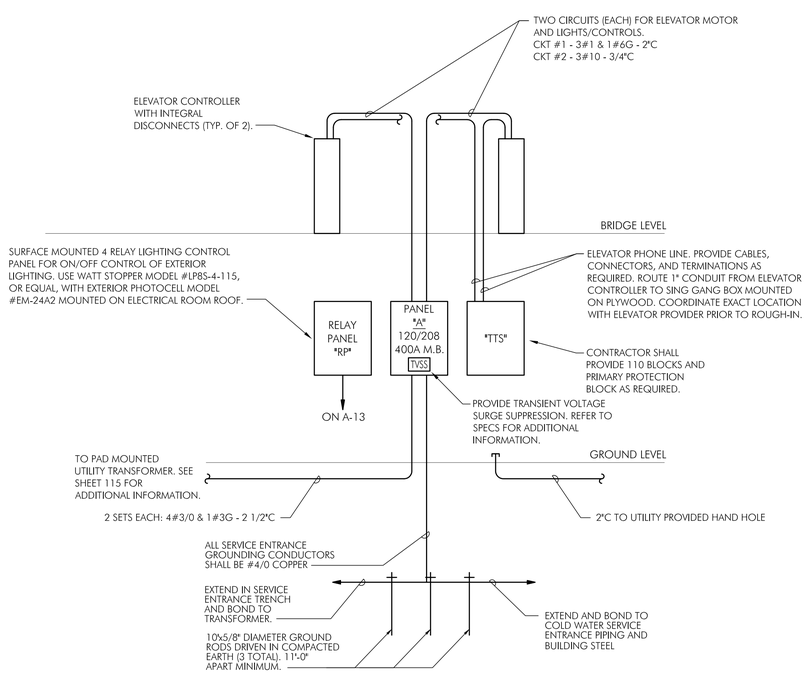

RISER DIAGRAM

SCALE: NONE

GENERAL NOTES.

1. THIS DRAWING IS GENERALLY DIAGRAMMATIC IN NATURE AND EXCEPT WHERE SPECIFICALLY DIMENSIONED OR DETAILED, INDICATES THE GENERAL ARRANGEMENT OF THE WORK. THE CONTRACTOR SHALL INSTALL HIS/HER WORK TO CONFORM AS NEARLY AS POSSIBLE TO THE LOCATIONS AND ARRANGEMENTS SHOWN, WITH ONLY SUCH MINOR ADJUSTMENTS AS NECESSARY. THE CONTRACTOR SHALL COORDINATED THE WORK WITH ALL OTHER TRADES TO AVOID INTERFERENCES.
2. ALL ELECTRICAL COMPONENTS EXTENDED THROUGH A FIRE RATED STRUCTURE SHALL BE PROTECTED OR SEALED AS REQUIRED TO MAINTAIN RATING OF STRUCTURE.
3. VERIFY ELECTRICAL REQUIREMENTS FOR ALL EQUIPMENT, PROVIDE CIRCUITS AND FUSES SIZED IN ACCORDANCE WITH MANUFACTURER'S RECOMMENDATIONS.
4. MAINTAIN CODE REQUIRED CLEARANCES AT ALL ELECTRICAL PANELS AND DISCONNECT SWITCHES. THERE SHALL BE NO EQUIPMENT, PIPING, OR DUCT WORK INSTALLED IN OR ABOVE THE WORKING SPACE CLEARANCES.
5. THE FIRE ALAM CONTRACTOR MUST BE CERTIFIED IN ACCORDANCE WITH THE TENNESSEE ALARM CONTRACTORS LICENSING ACT OF 1991, TCA TITLE 62, AND CHAPTER 32. CALL 615-741-9771 FOR ADDITIONAL INFORMATION.
6. MORE THAN TWO VISIBLE FIRE ALARM NOTIFICATION DEVICES IN THE SAM ROOM OR ADJACENT SPACE WITH THE FIELD OF VIEW MUST FLASH IN SYNCHRONIZATION. (NFPA 72 7.5.4.1.1 AND 7.5.4.1.2(3))
7. ALL FIRE ALARM WIRING SHALL BE INSTALLED IN MINIMUM 1" CONDUIT WITH JUNCTION BOXES PAINTED RED. IT IS THE RESPONSIBILITY OF THE CONTRACTOR TO ALL FIRE ALARM CONDUITS NOT SHOWN ON PLANS PER NFPA 70.
8. ALL REQUIRED DOCUMENTATION REGARDING THE DESIGN OF FIRE DETECTION, ALARM, AND COMMUNICATIONS SYSTEMS AND THE PROCEDURES FOR MAINTENANCE, INSPECTION, AND TESTING OF FIRE DETECTION, ALARM, AND COMMUNICATIONS SYSTEMS SHALL BE MAINTAINED AT AN APPROVED, SECURED LOCATION FOR THE LIFE OF THE SYSTEM. (NFPA 101 9.6.1.9 AND IFC 901.6.2.1)
9. THE CONTRACTOR SHALL VISIT THE JOB SITE AND CAREFULLY EXAMINE THOSE PORTIONS OF THE SITE AFFECTED BY THIS WORK SO AS TO BECOME FAMILIAR WITH EXISTING CONDITIONS THAT MAY AFFECT EXECUTION OF THE WORK.
10. THE CONTRACTOR IS RESPONSIBLE FOR OBTAINING ALL NECESSARY PERMITS.
11. ALL WORK SHALL BE DONE IN ACCORDANCE WITH THE 2008 NATIONAL ELECTRICAL CODE, NFPA 70, LOCAL CODES/ORDINANCES AND THE APPLICABLE ACCESSIBILITY CODE. SHOULD PLANS AND CODES CONFLICT, THE CODE TAKES PRECEDENCE. MAKE NO CHANGES, EVEN IN THE CASE OF CONFLICT, WITHOUT FIRST OBTAINING APPROVAL OF THE ENGINEER.
12. "PROVIDE" AS USED HERE AND ON THE DRAWINGS, IS AN ALL-INCLUSIVE TERM REQUIRING CONTRACTOR TO FURNISH, INSTALL, WIRE, AND CONNECT ALL SPECIFIED EQUIPMENT AS WELL AS COMPONENTS, ACCESSORIES, AND MOUNTING HARDWARE TO INSURE THAT SPECIFIED EQUIPMENT FUNCTIONS TO MEET SYSTEM REQUIREMENTS.
13. IT SHALL BE THE RESPONSIBILITY OF THE CONTRACTOR TO PROTECT OTHER FACILITIES AND EQUIPMENT FROM DAMAGE. THE CONTRACTOR SHALL BEAR ALL EXPENSE FOR REPAIR OR REPLACEMENT OF FACILITIES, EQUIPMENT, OR OTHER PROPERTY DAMAGED BY OPERATIONS IN CONJUNCTION WITH THE COMPLETION OF THIS WORK.
14. CONTRACTOR SHALL GIVE ADEQUATE NOTIFICATION TO TENNESSEE ONE CALL, (800) 351-1111, PRIOR TO COMMENCEMENT OF ANY EXCAVATION.
15. INSTALL SPECIFIED EQUIPMENT, AS NOTED ON DRAWINGS, OR APPROVED EQUAL. ADDITIONAL EQUIPMENT AND MATERIAL MAY BE REQUIRED OTHER THAN THAT SHOWN ON DRAWINGS. CONTRACTOR SHALL PROVIDE ALL MATERIAL, LABOR, AND EQUIPMENT REQUIRED.
16. THE CONTRACTOR SHALL VERIFY THAT THE ACTUAL EQUIPMENT SUPPLIED HAS THE SAME ELECTRICAL SPECIFICATIONS AS THE EQUIPMENT USED AS THE BASIS OF DESIGN. IF THE EQUIPMENT IS DIFFERENT, THE CONTRACTOR SHALL MAKE ADJUSTMENTS TO THE PANELS AND CIRCUITS AND INCLUDE THEM IN SUBMITTALS.
17. ALL MATERIALS SHALL BE LISTED AND LABELED BY UNDERWRITERS LABORATORY, INC.
18. ALL WIRES SHALL BE TERMINATED AND LABELED. ALL JUNCTION BOXES SHALL BE LABELED TO INDICATED THE CIRCUITS CONTAINED IN THE BOX.
19. PANELBOARD LEGENDS SHALL BE TYPED.
20. ALL FEEDERS #4 AND LARGER SHALL BE MEGGER TESTED AFTER INSTALLATION.
21. UNLESS OTHERWISE NOTED, ALL CONDUCTORS SHALL BE COPPER AND #12 AWG MINIMUM WITH THHN/THWN, 600 VOLT INSULATION.
22. PROVIDE A DEDICATED NEUTRAL, COLOR CODED, FOR EACH UNGROUNDED CONDUCTOR. SHARING OF NEUTRALS IS PROHIBITED.
23. DO NOT INSTALL MORE THAN THREE CIRCUITS (SIX CURRENT CARRYING CONDUCTORS) IN A CONDUIT.
24. THE MINIMUM CONDUIT SIZE SHALL BE 3/4", UNLESS OTHERWISE NOTED. INTERIOR CONDUITS SHALL BE EMT; UNDERGROUND CONDUIT AND CONCRETE ENCASED CONDUIT SHALL BE SCHEDULE 40 PVC. EXTERIOR EXPOSED CONDUIT SHALL BE SCHEDULE 80 PVC.
25. MC CABLE SHALL NOT BE USED.
26. A GREEN, COPPER GROUND WIRE SHALL BE INSTALLED IN ALL CONDUIT SYSTEMS AND SHALL BE BONDED TO ALL ENCLOSURES, BOXES, AND EQUIPMENT.
27. BONDING JUMPERS SHALL BE USED TO BOND CONDUIT TO ENCLOSURES, BOXES, AND EQUIPMENT WHERE KNOCKOUTS ARE USED.
28. THE CONTRACTOR SHALL PROVIDE ADEQUATE TEMPORARY POWER AND LIGHTING, EQUIVALENT TO ONE 150-WATT INCANDESCENT LAMP PER 200 SQ. FT.
29. THE CONTRACTOR SHALL GUARANTEE ALL WORK TO BE FREE OF DEFECTS IN WORKMANSHIP AND MATERIALS FOR 18 MONTHS.

LIGHTING FIXTURE SCHEDULE

TYPE	DESCRIPTION
A	2'X4' RECESSED LED TROFFER WITH 4154 LUMEN LIGHT PACKAGE. MANUFACTURER: CORELITE MODEL NUMBER: DRI-WS-2L35-1D-120-24-T-W6
AE	2'X4' RECESSED LED TROFFER WITH 4154 LUMEN LIGHT PACKAGE, BATTER BACK-UP. MANUFACTURER: CORELITE MODEL NUMBER: DRI-WS-2L35-1B-120-24-T-W6
B	2'X2' RECESSED LED TROFFER WITH 2249 LUMEN LIGHT PACKAGE. MANUFACTURER: CORELITE MODEL NUMBER: DRI-WS-1L35-1D-120-22-T
C	2'X4' SUSPENDED LED TROFFER WITH 5551 LUMEN LIGHT PACKAGE. MANUFACTURER: CORELITE MODEL NUMBER: DRI-WS-3L35-1D-120-22-T
CE	2'X4' AIRCRAFT CABLE SUSPENDED LED TROFFER WITH 5551 LUMEN LIGHT PACKAGE, BATTERY BACK-UP. MANUFACTURER: CORELITE MODEL NUMBER: DRI-WS-3L35-1B-120-22-SU
DE	4' CHAIN HUNG LED STRIP LIGHT WITH BATTERY BACK-UP. MANUFACTURER: METALUX MODEL NUMBER: SNLED-LD145-120-RM-EL-L835-CD-1
EE	4' LED VAPORTIGHT FIXTURE MOUNTED ON ELEVATOR PIT WALL. COORDINATE EXACT LOCATION WITH ELEVATOR EQUIPMENT PRIOR TO ROUGH-IN. MANUFACTURER: METALUX MODEL NUMBER: VT-LD2-55DR-120V-EL400-L835-CD2-WL
F	40" LED LIGHT BOLLARD WITH FINISH AS SELECTED BY ARCHITECT. MANUFACTURER: LIGMAN MODEL NUMBER: U1068S
G	6" RECESSED LED DOWNLIGHT WITH 1200 LUMEN LAMP PACKAGE. MANUFACTURER: HALO MODEL NUMBER: PD612-ED010-PDM6-64VG
GE	6" RECESSED LED DOWNLIGHT WITH 1200 LUMEN LAMP PACKAGE AND BATTERY BACK-UP. MANUFACTURER: HALO MODEL NUMBER: PD612-ED010REM-PDM6-64VG
H	WALL MOUNTED EXTERIOR LED FIXTURE WITH FINISH AS SELECTED BY ARCHITECT. MANUFACTURER: LUMARK MODEL NUMBER: XTOR2A-N
X	UNIVERSAL MOUNT EXIT SIGN WITH GREEN LETTERING AND BATTERY BACK-UP. MANUFACTURER: SURE-LITES MODEL NUMBER: EUS-70-G

LEGEND

	PANELBOARD, RECESSED OR SURFACE MOUTNED AS INDICATED ON DRAWINGS. ADJUST HEIGHT OF PANEL SUCH THAT NO BREAKER IS HIGHER THAN 6' AFF.
	CONCEALED CONDUIT.
	EXPOSED CONDUIT
	HOMERUN - EXTEND FEEDER TO THE DESIGNATED PANELBOARD OR DEVICE. ALL FEEDERS SHALL BE PROVIDED WITH A GREEN CODE SIZE EQUIPMENT GROUND CONDUCTOR. BOND TO GROUND BUS BAR IN PANELBOARD. CIRCUITS OVER 200 FEET IN LENGTH SHALL BE INCREASED BY AT LEAST ONE WIRE SIZE TO COMPENSATE FOR VOLTAGE DROP. WIRE SIZE MAY BE ASSUMED TO BE 2#12 & 1#12G - 3/4" CONDUIT UNLESS OTHERWISE NOTED.

LIGHTING

X	2' X 4' RECESSED LIGHTING FIXTURE. "X" INDICATES FIXTURE TYPE, REFER TO LIGHTING FIXTURE SCHEDULE FOR ADDITIONAL INFORMATION.
X	2' X 4' RECESSED FLUORESCENT LIGHTING FIXTURE WITH BATTERY BACK-UP. "X" INDICATES FIXTURE TYPE, REFER TO LIGHTING FIXTURE SCHEDULE FOR ADDITIONAL INFORMATION.
X	2' X 2' RECESSED LIGHTING FIXTURE. "X" INDICATES FIXTURE TYPE, REFER TO LIGHTING FIXTURE SCHEDULE FOR ADDITIONAL INFORMATION.
"X"	WALL MOUNTED LIGHTING FIXTURE. "X" INDICATES FIXTURE TYPE, REFER TO LIGHTING FIXTURE SCHEDULE FOR ADDITIONAL INFORMATION.
X	RECESSED DOWNLIGHT. "X" INDICATES FIXTURE TYPE, REFER TO LIGHTING FIXTURE SCHEDULE FOR ADDITIONAL INFORMATION.
	EXIT SIGN. SHADED QUADRANTS INDICATE NUMBER OF FACES, PROVIDE DIRECTIONAL ARROWS AS INDICATED ON PLANS. WHERE WALL MOUNTED, INSTALL 96" AFF. REFER TO LIGHTING FIXTURE SCHEDULE FOR ADDITIONAL INFORMATION.

CONTROLS

S	20A SINGLE-POLE TOGGLE LIGHT SWITCH MOUNTED AT 48" AFF.
S_O	WALL SWITCH OCCUPANCY SENSOR MOUNTED AT 48" AFF.
PC	CEILING MOUNTED PHOTOCELL WITH SINGLE ZONE 0-10V ROOM CONTROLLER FOR CONTROL OF INTERIOR LIGHTING. USE WATT STOPPER MODEL #LMLS-400-LMCT-100 AND ROOM CONTROLLER MODEL #LMRC-210 OR EQUAL. REFER TO DETAIL ON SHEET 116 FOR ADDITIONAL INFORMATION.
RP	RELAY PANEL. REFER TO RISER FOR ADDITIONAL INFORMATION.

POWER

	120 VOLT, 20A, NEMA 5-20 DUPLEX RECEPTACLE MOUNTED AT 18" AFF.
	120 VOLT, 20A, NEMA 5-20 DUPLEX RECEPTACLE MOUNTED AT 42" AFF.
J	JUNCTION BOX. SIZE, USE AND LOCATION AS REQUIRED.
WP	INDICATES DEVICE TO PROVIDED WITH WEATHER PROOF COVER.
AC	INDICATES DEVICE TO BE MOUNTED ABOVE COUNTER. COORDINATE EXACT ELEVATION WITH ARCHITECTURAL CASE WORK ELEVATIONS.
G	INDICATES DEVICE IS TO BE GROUND FAULT CIRCUIT INTERRUPTING TYPE.

SYSTEMS

C	INDOOR SECURITY CAMERA, ARECONT MODEL #AV5255AM-A. CONTRACTOR SHALL PROVIDE CONDUIT AND WIRE FROM CAMERA TO SWITCH LOCATED IN MECHANICAL ROOM ON GROUND LEVEL.
EXT C	EXTERIOR SECURITY CAMERA, ARECONT MODEL #AV5255AM-A. CONTRACTOR SHALL PROVIDE CONDUIT AND WIRE FROM CAMERA TO SWITCH LOCATED IN MECHANICAL ROOM ON GROUND LEVEL.
EP	WALL MOUNTED EMERGENCY PHONE WITH BLUE LIGHT, TALKAPHON MODEL #ETP-WM-E. CONTRACTOR SHALL PROVIDE CONDUIT AND WIRE FROM EMERGENCY PHONE TO "TTS" IN MECHANICAL ROOM ON GROUND LEVEL FOR CONNECTION TO 911 LINE.
TTS	TELEPHONE TERMINAL SPACE. PROVIDE 2'W X 6'H 3/4" PLYWOOD PAINTED WITH FIRE RETARDANT PAINT TO MATCH WALL COLOR. CONTRACTOR SHALL PROVIDE AND MOUNT CATALYST 3560-CG SWITCH AND GROUND BAR.

FIRE ALARM

FACP	FIRE ALARM CONTROL PANEL
F	FIRE ALARM MANUAL PULL STATION, MOUNT AT 48" AFF.
L	FIRE ALARM STROBE LIGHT, MOUNT 80" AFF.
L	FIRE ALARM COMBINATION HORN/STROBE LIGHT, MOUNT 80" AFF.
L	FIRE ALARM COMBINATION HORN/STROBE LIGHT, CEILING MOUNTED.
S	FIRE ALARM AUTOMATIC SMOKE DETECTOR.
H	FIRE ALARM AUTOMATIC HEAT DETECTOR.
DD	FIRE ALARM DUCT MOUNTED SMOKE DETECTOR. PROVIDED BY ELECTRICAL, MOUNTED BY MECHANICAL, CONNECTED BY ELECTRICAL.
TS	FIRE SUPPRESSION TAMPER SWITCH. REFER TO FIRE PROTECTION.
FS	FIRE SUPPRESSION FLOW SWITCH. REFER TO FIRE PROTECTION.
WV	FIRE SUPPRESSION WALL INDICATOR VALVE. REFER TO FIRE PROTECTION.

GENERAL LEGEND NOTES:
1. SOME ITEMS SHOWN ON LEGEND MAY NOT BE USED IN DRAWINGS.
2. ALL DEVICE COVERPLATES SHALL BE LABELED INDICATING PANEL AND CIRCUIT SERVED. LABELS SHALL BE MASTIC PRINTED TYPE. CONTRACTOR SHALL USE A DEVICE SIMILAR TO A BRADY LABEL MAKER. LABELS SHALL HAVE BLACK LETTERS ON WHITE BACKGROUND.

PROJECT NO.	YEAR	SHEET NO.
STP - 126(19)	2014	117

REVISIONS

NO.	DATE	BY	DESCRIPTION

UNOFFICIAL SET

NOT FOR BIDDING

SEALED BY

KENNETH B. BLALOCK REGISTERED ENGINEER No. 107685 STATE OF TENNESSEE 06-20-14

I.C. Thomasson Associates Inc.
1114 Clinch Avenue, Suite 200
Knoxville, Tn 37916
865-525-3488 fax: 865-525-4471
ICT JOB No. 140003.90

STATE OF TENNESSEE
DEPARTMENT OF TRANSPORTATION

LEGEND, SCHEDULES & DETAILS
PEDESTRIAN BRIDGE OVER WILCOX DRIVE
BR. I.D. NO. 82SR1260017

U-64-182

checked K. Blalock
drawn S. Estep

G:\DGN\140003.90\ELEC\140003.9-E01.dwg -- Wednesday June 18, 2014, 4:34pm -- Copyright 2014, I.C. Thomasson Associates Inc.

plotted on: June 18, 2014, 4:34pm

SULLIVAN CO EASTMAN - PROJECT # STP - 126(19) SHEET LABEL: