TENNESSEE D.O.T.
DESIGN DIVISION
FILE NO.

STATE OF TENNESSEE
DEPARTMENT OF TRANSPORTATION
BUREAU OF ENGINEERING

OVERTON COUNTY

STATE ROUTE 136 (STANDING STONE PARK HIGHWAY)
OVER MILL CREEK (PARK LAKE)

BRIDGE REPAIR

STATE HIGHWAY NO. 136 F.A.H.S. NO.

TENN.	YEAR	SHEET NO.
	2014	1
FED. AID PROJ. NO.		
STATE PROJ. NO.	67008-4243-04	

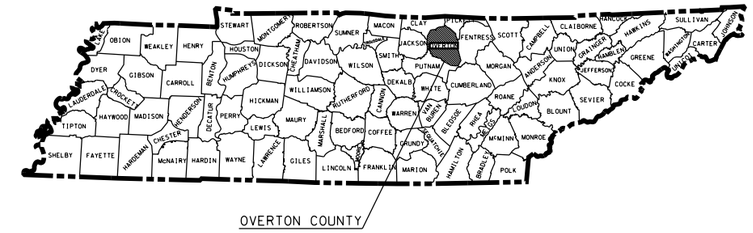

Index Of Sheets

SHEET NO.	DESCRIPTION
1	TITLE SHEET
2	ESTIMATED BRIDGE QUANTITIES
2A	GENERAL NOTES
2B	ESTIMATED ROADWAY QUANTITIES, GENERAL NOTES, & SPECIAL NOTES
2C	DETOUR PLAN
2D	TRAFFIC CONTROL
2E	EROSION CONTROL PLAN

STANDARD ROADWAY DRAWINGS

NO.	CURRENT REV.	DESCRIPTION

ROADWAY DESIGN STANDARDS

RD-A-1	12-18-99	STANDARD ABREVATIONS
RD-L-1	10-26-94	STANDARD LEGEND

TRAFFIC CONTROL APPURTENANCES

T-WZ-10	1-19-01	ADVANCE ROAD WORK SIGNING ON HIGHWAYS AND FREEWAYS
T-S-18	05-27-01	END OF ROADWAY AND DEAD END SIGNS, METAL BARRICADES (TYPE III) & WORK SPEED SIGNS

STANDARD BRIDGE DRAWINGS

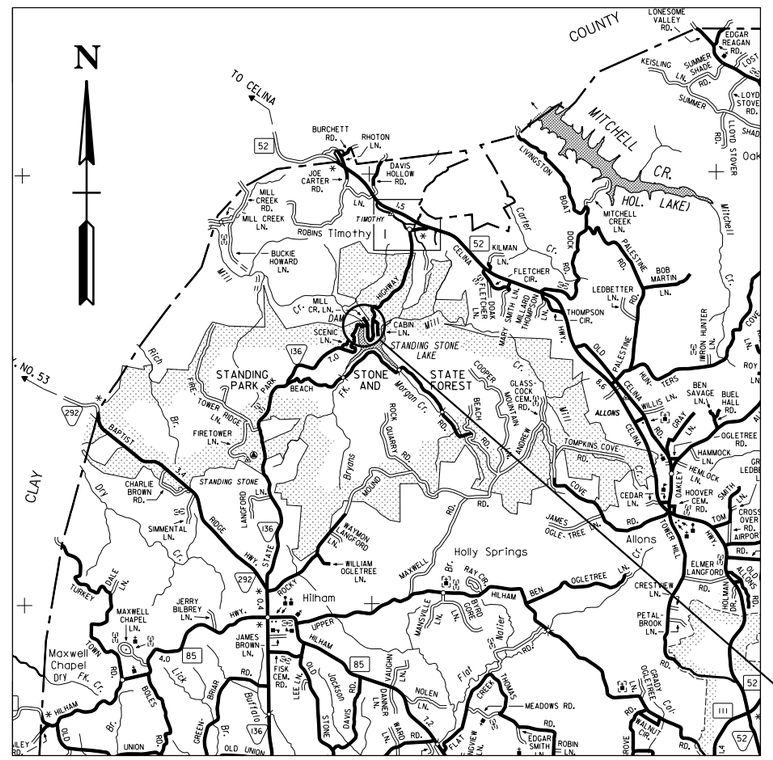

STATE ROUTE 136 OVER MILL CREEK
BRIDGE NO. 67-SR136-14.30

SCALE: 1"= 1 MILE

ROUTE	ADT	YEAR	POSTED SPEED LIMIT
STATE ROUTE 136	223	2014	40

LIST OF BRIDGE DRAWINGS

DWG NO.	LAST REV DATE	TITLE
BR-116-01	---	LAYOUT OF BRIDGE TO BE REPAIRED
BR-116-02	---	ESTIMATED BRIDGE QUANTITIES
BR-116-03	---	GENERAL NOTES
BR-116-04	---	NORTH ELEVATION VIEW
BR-116-05	---	TYPICAL SECTION THROUGH DAM
BR-116-06	---	LINTEL REPAIR DETAILS (1 OF 2)
BR-116-06A	---	LINTEL REPAIR DETAILS (2 OF 2)
BR-116-07	---	SUPERSTRUCTURE REPAIR DETAILS (1 OF 3)
BR-116-08	---	SUPERSTRUCTURE REPAIR DETAILS (2 OF 3)
BR-116-09	---	SUPERSTRUCTURE REPAIR DETAILS (3 OF 3)
BR-116-10	---	SUBSTRUCTURE REPAIR DETAILS
BR-116-11	---	BRIDGE REPAIR DETAILS
BR-116-12	---	ACCESS DOOR DETAILS
BR-116-13	---	BILL OF STEEL

LIST OF REFERENCE DRAWINGS
(TO BE PRINTED WITH PLANS)

DWG NO.	DESCRIPTION
BR-5-26	1991 REPAIR PLANS
BR-5-28	
BR-5-32	
BR-5-33	

APPROVED: Paul D. Degges
PAUL D. DEGGES, CHIEF ENGINEER

DATE:

APPROVED:
JOHN SCHROER, COMMISSIONER

SPECIAL NOTES

PROPOSALS MAY BE REJECTED BY THE COMMISSIONER IF ANY OF THE UNIT PRICES CONTAINED THEREIN ARE OBVIOUSLY UNBALANCED, EITHER EXCESSIVE OR BELOW THE REASONABLE COST ANALYSIS VALUE.

THIS PROJECT TO BE CONSTRUCTED UNDER THE STANDARD SPECIFICATIONS OF THE TENNESSEE DEPARTMENT OF TRANSPORTATION DATED MARCH 1, 1995 AND ADDITIONAL SPECIFICATIONS AND SPECIAL PROVISIONS CONTAINED IN THE PLANS AND IN THE PROPOSAL CONTRACT

TDOT ROAD SP. SV. 2 VALERIE NEWBERRY
DESIGNED BY NEEL-SCHAFFER, INC.
DESIGNER BRADLEY BIVENS CHECKED BY ROBERT DISHNER
P.E. NO. 67008-4243-04
PIN NO. 081563.01

UNOFFICIAL SET
NOT FOR BIDDING

BRADLEY E. BIVENS
REGISTERED ENGINEER
AGRICULTURE
COMMERCE
No. 21539
STATE OF TENNESSEE

U.S. DEPARTMENT OF TRANSPORTATION
FEDERAL HIGHWAY ADMINISTRATION

APPROVED:
DIVISION ADMINISTRATOR DATE

R:\8196 TDOT Bridge Repair\10 Overton SR136\Dgn\01- Title Sheet.sht
4/9/2014 9:36:29 AM

Survey & Design Division

PROJECT NO.	YEAR	SHEET NO.
67008-4243-04	2014	2

REVISIONS

NO.	DATE	BY	BRIEF DESCRIPTION

ESTIMATED BRIDGE QUANTITIES

	ITEM NO.	DESCRIPTION	UNIT	QUANTITY
4	202-01.03	REMOVAL OF TRASH AND DEBRIS	L.S.	1
3	602-10.01	STRUCTURAL STEEL REPAIRS	L.S.	1
5	604-03.01	CLASS "A" CONCRETE (BRIDGES)	C.Y.	15
7	604-10.14	REMOVE EXISTING WEARING SURFACE	L.S.	1
13	604-10.16	EXPANSION JOINT REPAIRS	L.F.	1
	604-10.30	BRIDGE DECK REPAIR (FULL DEPTH OF SLAB)	S.Y.	70
8	604-10.35	MODIFY BRIDGE DECK DRAIN SYSTEM	L.S.	1
	604-10.43	PENETRATING WATER REPELLENT CONCRETE SEAL	S.Y.	80.5
	604-10.50	BRIDGE DECK REPAIR (PARTIAL DEPTH OF SLAB)	S.Y.	50
1 6 9	604-10.54	CONCRETE REPAIRS	S.F.	656
1 10	604-10.58	EPOXY INJECTION (INJECTION)	GAL	11
1 11	604-10.62	EPOXY INJECTION (COMPLETE AND IN PLACE)	L.F.	466
12	604-10.73	LONGITUDINAL BRIDGE JOINT REPAIR	L.F.	1,323
1 2	612-06.01	REPOINTING OF STONE MASONRY JOINTS	L.F.	1,600
	617-01	BRIDGE DECK SEALANT	S.Y.	330.5

FOOTNOTES:

1. ITEM SHALL BE BID AS A CONTINGENCY AND MAY BE INCREASED, DECREASED OR ELIMINATED AS DIRECTED BY THE ENGINEER.

2. INCLUDES ALL COSTS TO CLEAN EFFLORESCENCE FROM EXISTING MORTAR JOINTS/CRACKS PRIOR TO REPOINTING. SEE DRAWING NO. BR-116-08 FOR NOTES AND DETAILS.

3. INCLUDES ALL COSTS TO INSTALL NEW STRUCTURAL STEEL LINTELS (13,738 LBS.). (SEE DRAWING BR-116-06).

4. INCLUDES ALL COSTS TO REMOVE AND DISPOSE OF EXISTING DEBRIS AT TEN (10) WALL DRAIN OPENINGS, REMOVAL OF DEBRIS FROM REPAIR AREAS OF BENTS/WALLS, AND CONCRETE REMOVAL AT TWO (2) ACCESS OPENINGS. SEE DRAWING BR-116-04 AND BR-116-12.

5. CONCRETE TO INCLUDE REPAIRS FOR INTERIOR WALLS AND ACCESS GATE OPENINGS AS SHOWN ON DRAWING BR-116-12.

6. INCLUDES COST OF 350 LBS. OF REINFORCEMENT FOR REPAIRS TO BENTS, INTERIOR WALLS, AND ACCESS GATE OPENINGS AS SHOWN ON DRAWINGS BR-116-10 AND BR-116-12.

7. INCLUDES REMOVAL AND DISPOSAL OF APPROXIMATELY 3¼" TO 6" ASPHALT FROM THE BRIDGE DECK.

8. INCLUDES ALL COSTS TO MODIFY 26 DECK DRAIN OPENINGS AND INSTALL UNDER DRAIN SYSTEMS FOR TWELVE (12) CLOSED BAYS/SPANS AND FOURTEEN (14) DECK DRIAN PIPES AS SHOWN ON DRAWING NO. BR-116-07.

9. INCLUDES ALL COSTS TO REPAIR SPALLED AND/OR DELAMINATED AREAS ON ABUTMENTS, PIERS, BENTS, AND DECK BEAMS USING QUICK SET PATCHING MATERIAL AND/OR HIGH EARLY STRENGTH CONCRETE.

10. INCLUDES COST OF ADHESIVE MATERIAL ONLY.

11. INCLUDES ALL COSTS TO EPOXY INJECT CRACKS IN BENTS, ABUTMENTS, AND BEAMS AND DOES NOT INCLUDE COST OF ADHESIVE MATERIAL. SEE DRAWING BR-116-11 FOR DETAILS AND NOTES.

12. LONGITUDINAL JOINT REPAIR IS TO BE USED TO RESEAL JOINTS BETWEEN BRIDGE RAILS AND CURB/SIDEWALK, CURB/SIDEWALK AND ASPHALT OVERLAY FOR FULL LENGTH OF BRIDGE AS SHOWN ON DRAWING BR-116-08. PRODUCT USED SHALL BE FOUND ON THE TDOT QUALIFIED PRODUCTS LIST. SEE TDOT STANDARD SPECIFICATIONS SECTION 905.05.

13. ITEM SHALL INCLUDE ALL COSTS NECESSARY TO REMOVE EXISTING JOINT MATERIAL AND SEAL TRANSVERSE JOINTS WITH BACKER RODS AS SHOWN ON DRAWING NO. BR-116-09.

UNOFFICIAL SET

NOT FOR BIDDING

BRADEY E. BIVENS
REGISTERED ENGINEER
AGRICULTURE
COMMERCE
No. 21539
STATE OF TENNESSEE

STATE OF TENNESSEE
DEPARTMENT OF TRANSPORTATION

ESTIMATED BRIDGE QUANTITIES

BRIDGE NO. 67-SR136-14.30
STATE ROUTE 136
(STANDING STONE PARK HIGHWAY)
OVER
MILL CREEK (PARK LAKE)
OVERTON COUNTY
2014

DESIGNED BY	MRP	DATE	10/13
DRAWN BY	MRP	DATE	10/13
SUPERVISED BY	BEB	DATE	10/13
CHECKED BY	RMD	DATE	10/13

GENERAL NOTES:

SPECIFICATIONS:

STANDARD ROAD AND BRIDGE SPECIFICATION OF THE TENNESSEE DEPARTMENT OF TRANSPORTATION. (MARCH 1, 2006 EDITION)

LOADING:

HL-93 LIVE LOADING; DEAD LOAD INCLUDES 35 LB/SQ.FT. FOR FUTURE WEARING SURFACE.

DESIGN SPECIFICATIONS:

AASHTO LRFD 5TH EDITION 2010 WITH INTERIMS.

CLASS "A" CONCRETE:

TO BE CLASS "A" (CAST IN PLACE), f'c=3000 PSI CONCRETE, EXCEPT AS NOTED OTHERWISE.

REINFORCING STEEL:

SHALL BE ASTM A615 GRADE 60 UNLESS NOTED OTHERWISE. SEE SECTION 604 & 907 OF THE STANDARD SPECIFICATIONS.

BRIDGE RAIL SYSTEM:

EXISTING STONE MASONRY BRIDGE RAIL SHALL REMAIN IN PLACE AND SHALL BE REPAIRED ACCORDING TO DETAILS AND NOTES IN THESE PLANS.

NOTE:

THE CONTRACTOR SHALL PROVIDE 100% CONVENTIONAL FALL PROTECTION FOR WORKERS PERFORMING REPAIRS ABOVE 15 FEET.

GROUTED BARS IN DRILLED HOLES:

HORIZONTALLY DRILLED HOLES (AND VERTICALLY DRILLED HOLES IN BENTS) SHALL BE DRILLED ½" IN DIAMETER LARGER THAN THE BAR, CLEANED, PACKED WITH NON-SHRINK GROUT, AND THE BAR ROTATED (NOT DRIVEN) TO ITS SEAT. OTHER VERTICALLY DRILLED HOLES SHALL BE DRILLED ¼" IN DIAMETER LARGER THAN THE BAR, CLEANED, PACKED WITH EPOXY GROUT AND THE BAR SHALL BE DRIVEN TO ITS SEAT. ALL GROUTING MATERIAL SHALL BE APPROVED BY T.D.O.T. MATERIALS AND TESTS.

SHOP DRAWINGS:

SEE SECTION 105.02 OF THE STANDARD SPECIFICATIONS. SHOP DRAWINGS SHALL BE SUBMITTED TO THE HEADQUARTERS BRIDGE INSPECTION AND REPAIR OFFICE IN LIEU OF THE DIVISION OF STRUCTURES

VALUE ENGINEERING ALTERNATE BRIDGE DESIGN CRITERIA:

ALTERNATE BRIDGE DESIGNS MAY NOT DIMINISH THE FUNCTIONAL OR STRUCTURAL EQUIVALENCY OF THE BRIDGE AND MUST MEET OR EXCEED BOTH THE SERVICE LEVEL AND ULTIMATE CAPACITIES OF THE CONTRACT PLANS STRUCTURE. ADDITIONALLY, THE WATERWAY OPENING AND FLOOD CLEARANCES MAY NOT BE REDUCED; FOR GRADE SEPARATIONS THE HORIZONTAL CLEARANCES MAY NOT BE REDUCED NOR MAY THE VERTICAL CLEARANCES BE LESS THAN THE MINIMUM ACCEPTABLE FOR THE TYPE FACILITY CROSSED.

BRIDGE AND ROAD CLOSURE:

TRAFFIC TO USE DETOUR ROADS.

QUICK SET PATCHING MATERIAL:

QUICK-SET PATCHING MATERIAL SHALL BE A POLYMER MODIFIED CEMENTIOUS PATCHING MATERIAL. SEE TDOT QUALIFIED PRODUCTS LIST 13, SECTION B.6, FOR ACCEPTABLE PATCHING MATERIALS.

DEMOLITION:

THE CONTRACTOR SHALL TAKE SPECIAL CARE TO PROTECT ANY PARTS OF THE STRUCTURE THAT ARE NOT TO BE REMOVED SPECIFICALLY. THE CONTRACTOR IS NOT ALLOWED TO USE A HYDRAULIC RAM MOUNTED ON A BACKHOE (COMMONLY CALLED A HOE RAM) OR OTHER SIMILARLY HEAVY EQUIPMENT FOR CONCRETE REMOVAL. PNEUMATIC HAMMERS MAY BE USED, AS SPECIFIED, TO REMOVE UNSOUND CONCRETE. SAWING OR CUTTING OF THE CONCRETE IS ACCEPTABLE SO LONG AS ANY SPECIFIED PROJECTION OF THE EXISTING REINFORCING STEEL IS MAINTAINED. ALL DEVICES PROPOSED FOR CONCRETE DEMOLITION SHALL MEET THE APPROVAL OF THE ENGINEER.

DEBRIS AND SEDIMENT REMOVAL:

THE CONTRACTOR SHALL TAKE SPECIAL CARE TO REMOVE TRASH AND DEBRIS FROM BENEATH THE BRIDGE AND FROM THE TOP OF BENTS PRIOR TO AND DURING CONSTRUCTION. THIS INCLUDES ORGANIC DEBRIS WASHED BY THE STREAM AND DEPOSITED AGAINST THE BRIDGE OR WITHIN WORK AREAS. THIS ALSO INCLUDES REMOVING ALL SEDIMENT, DEBRIS, AND TRASH FROM ALL DRAIN OPENINGS WITHIN CLOSED BAYS OF BRIDGE TO PROVIDE PROPER DRAINAGE. IF NECESSARY, RE-GRADE AREAS AROUND DRAIN OPENINGS WITH HAND TOOLS TO PROVIDE POSITIVE DRAINAGE. THE COST OF ALL SEDIMENT, TRASH, AND DEBRIS REMOVAL SHALL BE INCLUDED IN OTHER ITEMS BID ON.

SPECIAL NOTES TO CONTRACTOR:

CONTRACTOR SHALL USE EXTREME CARE AND TAKE ANY MEASURE NECESSARY TO ENSURE THAT NO DEBRIS IS DROPPED INTO THE LAKE OR THE STREAM BELOW.THIS SHALL BE ACCOMPLISHED BY THE USE OF BASKETS, NETTING, WRAPPING, WORK PLATFORM, OR OTHER SIMILARLY EFFECTIVE MEANS. A CONTAINMENT SYSTEM MUST BE IN PLACE BEFORE WORK COMMENCES ON THE SUBSTRUCTURES OR BRIDGE DECK. ANY DEBRIS WHICH IS ALLOWED TO DROP BELOW THE BRIDGE SHALL NOT BE ALLOWED TO ENTER THE WATER AND SHALL BE REMOVED AND DISPOSED OF BY THE CONTRACTOR IMMEDIATELY. COST OF REMOVING AND DISPOSING OF CONSTRUCTION DEBRIS SHALL BE INCLUDED IN OTHER ITEMS BID ON.

THE TDOT CONSTRUCTION SUPERVISOR WILL CONTACT THE REGIONAL BIOLOGIST (R. DEEDEE KATHMAN AT 615-253-2472 OR ROB HOWARD AT 931-526-4522) TWO WEEKS PRIOR TO COMMENCEMENT OF WORK.

THE CONTRACTOR IS RESPONSIBLE FOR AND SHOULD TAKE ALL PRECAUTIONS TO ENSURE STABILITY OF THE STRUCTURE DURING ALL REPAIRS.

THE CONTRACTOR SHALL FIELD VERIFY ALL DIMENSIONS AND QUANTITIES BEFORE ORDERING ANY MATERIALS.

THE CONTRACTOR SHALL CHECK LOCATION OF ALL EXISTING SUBSTRUCTURES AND VERIFY REPAIR LENGTHS BEFORE ORDERING STRUCTURAL STEEL OR REINFORCING STEEL.

BRIDGE DECK SEALER

BRIDGE DECK SEALER SHALL BE APPLIED TO THE LIMITS SHOWN IN THESE PLANS. CONCRETE SHALL BE CLEAN AND DRY BEFORE APPLING THE CONCRETE SEAL, AND THE THICKNESS OF THE SEAL SHALL BE AS RECOMMENDED BY THE SEALANT MANUFACTURER. ACCEPTABLE CONCRETE SEALERS ARE INCLUDED IN THE QUALIFIED PRODUCTS LIST FOR NON-PENETRATING CONCRETE SEALS MAINTAINED BY THE DIVISION OF MATERIALS AND TESTS. THE SEALER SHALL BE CLEAR OR SIMILAR TO THE COLOR OF EXISTING CONCRETE SURFACES TO BE SEALED. THE COST OF THE SEALER, COMPLETE AND IN PLACE, SHALL BE BID UNDER ITEM NUMBER 604-10.43.

CLEANING AND PAINTING OF REINFORCING STEEL:

UPON REMOVAL OF DETERIORATED CONCRETE, ALL EXPOSED REINFORCING STEEL SHALL BE CLEANED AND PAINTED IMMEDIATELY AFTER CLEANING TO PREVENT RE-RUSTING. AREAS SHALL BE RE-CLEANED IF RUSTING OCCURS BEFORE PAINTING. PAINT SHALL BE AN EPOXY MASTIC PAINT AND SHALL BE APPLIED IN A THIN LAYER TO MAINTAIN A GOOD BOND BETWEEN THE REINFORCING STEEL AND THE CONCRETE. ALL MATERIAL AND LABOR COSTS FOR CLEANING AND PAINTING OF EXISTING REINFORCING STEEL SHALL BE INCLUDED IN THE COST OF ITEM 604-10.54, CONCRETE REPAIRS OR ITEM 604-10.05, HIGH EARLY STRENGTH CONCRETE REPAIRS.

PAINTING OF STRUCTURAL STEEL:

NEW STEEL LINTEL SHALL BE SHOP PAINTED TO MATCH THE EXISTING STONE. THE COLOR SHALL BE APPROVED BY THE ENGINEER.

PAINT SYSTEM SHALL BE SYSTEM "A" IN ACCORDANCE WITH SUB SECTION 603.06(B). COLOR OF THE FINISH COAT SHALL COMPLY WITH FEDERAL STANDARD 595B. FEDERAL SPECIFICATION 14120. SEE SECTIONS 603 AND 910 OF THE STANDARD SPECIFICATIONS.

FORMS AND FALSEWORK:

CONCRETE FORM WORK, FALSEWORK, AND TEMPORARY SUPPORTS SHALL BE REMOVED FROM THE JOB SITE AFTER WORK IS COMPLETED. COST OF FORMS, FALSEWORK, AND TEMPORARY SUPPORT SHALL BE INCLUDED IN ITEMS BID ON. THIS WORK SHALL BE COMPLETED BEFORE FINAL PAYMENT IS APPROVED.

APPROVAL OF MATERIALS:

NO FABRICATION SHALL BE STARTED UNTIL ALL THE MATERIALS INVOLVED HAVE BEEN APPROVED BY THE TENNESSEE DEPARTMENT OF TRANSPORTATION, DIVISION OF MATERIALS AND TESTS WITH A COPY OF THE TEST REPORTS ALSO GOING TO THE TENNESSEE DEPARTMENT OF TRANSPORTATION, DIVISION OF STRUCTURES, BRIDGE INSPECTION AND REPAIR OFFICE.

PROJECT NO.	YEAR	SHEET NO.
67008-4243-04	2014	2A

REVISIONS

NO.	DATE	BY	BRIEF DESCRIPTION

UNOFFICIAL SET

NOT FOR BIDDING

BRADLEY E. BIVENS
REGISTERED ENGINEER
AGRICULTURE
COMMERCE
No. 21539
STATE OF TENNESSEE

STATE OF TENNESSEE
DEPARTMENT OF TRANSPORTATION

GENERAL NOTES

BRIDGE NO. 67-SR136-14.30
STATE ROUTE 136
(STANDING STONE PARK HIGHWAY)
OVER
MILL CREEK (PARK LAKE)
OVERTON COUNTY
2014

BR-116-03

DESIGNED BY	MRP	DATE	10/13
DRAWN BY	MRP	DATE	10/13
SUPERVISED BY	BEB	DATE	10/13
CHECKED BY	RMD	DATE	10/13

TENNESSEE D.O.T.
DESIGN DIVISION
FILE NO.

TYPE	YEAR	PROJECT NO.	SHEET NO.
CONST.	2014	67008-4243-04	2B

ESTIMATED ROADWAY QUANTITIES

	ITEM NO.	DESCRIPTION	UNIT	QUANTIY
	105-01	CONSTRUCTION STAKES, LINES AND GRADES	L.S.	1
	203-06	WATER	M.G.	1
	209-08.02	TEMPORARY SILT FENCE (W/BACKING)	L.F.	20
	209-13.04	TURBIDITY CURTAIN	L.F.	350
①	307-01.08	ASPHALT CONCRETE MIX (PG64-22) (BPMB-HM) GRADING B-M2	TON	70.5
	403-01	BITUMINOUS MATERIAL FOR TACK COAT (TC)	TON	0.5
	411-01.10	ACS MIX (PG64-22) GRADING D	TON	22.4
	415-01.02	COLD PLANING BITUMINOUS PAVEMENT	S.Y.	2.5
	707-08.11	HIGH VISIBILITY CONSTRUCTION FENCE	L.F.	267
	712-01	TRAFFIC CONTROL	L.S.	1
	712-01	WARNING LIGHTS (TYPE A)	EACH	4
	712-04.01	FLEXIBLE DRUMS (CHANNELIZING)	EACH	20
	712-06	SIGNS (CONSTRUCTION)	S.F.	641
	712-07.03	TEMPORARY BARRICADES (TYPE III)	L.F.	63
	713-16.50	REMOVE AND REPLACE SIGN (BRIDGE OBJECT MARKER)	EACH	2
	717-01	MOBILIZATION	L.S.	1
②	801-01	SEEDING (WITH MULCH)	UNIT	0.5
②	805-12.01	EROSION CONTROL BLANKET (TYPE I)	S.Y.	10

FOOTNOTES:

① ITEM MAY BE INCREASED OR DECREASED AS DIRECTED BY THE ENGINEER.

② INCLUDES RE-STABILIZATION OF AREA OF EXCAVATION AT SOUTHEAST CORNER OF BRIDGE REQUIRED TO EXPOSE EXISTING STEEL LINTEL FOR REPAIR.

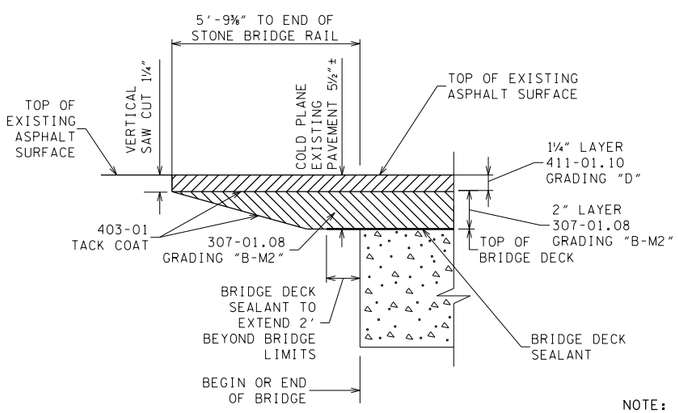

PAVEMENT TRANSITION DETAIL
NOT TO SCALE

NOTE: SEE SECTIONS 617 AND 906.04 OF THE TENNESSEE STANDARD SPECIFICATIONS FOR ROAD AND BRIDGE CONSTRUCTION DATED MARCH 1, 2006.

GENERAL NOTES

GRADING

1. ANY AREA THAT IS DISTURBED OUTSIDE THE LIMITS OF CONSTRUCTION DURING THE LIFE OF THIS PROJECT SHALL BE REPAIRED BY THE CONTRACTOR AT HIS EXPENSE.

2. THE CONTRACTOR SHALL NOT DISPOSE OF ANY MATERIAL EITHER ON OR OFF STATE-OWNED R.O.W. IN REGULATORY FLOOD WAY AS DEFINED BY THE FEDERAL EMERGENCY MANAGEMENT AGENCY WITHOUT APPROVAL BY SAME. ALL MATERIAL SHALL BE DISPOSED OF IN UPLAND (NON-WETLAND) AREAS AND ABOVE ORDINARY HIGH WATER OF ANY ADJACENT WATERCOURSE. THIS DOES NOT ELIMINATE THE NEED TO OBTAIN ANY OTHER LICENSES OR PERMITS THAT MAY BE REQUIRED BY ANY OTHER FEDERAL, STATE OR LOCAL AGENCY.

UTILITY NOTES:

2. THE LOCATIONS OF UTILITIES SHOWN WITHIN THESE PLANS ARE APPROXIMATE ONLY. EXACT LOCATIONS SHALL BE DETERMINED IN THE FIELD BY CONTACTING THE UTILITY COMPANIES INVOLVED. NOTIFICATION BY CALLING THE TENNESSEE ONE CALL SYSTEM, INC., AT 1-800-351-1111 AS REQUIRED BY TCA 65-31-106 WILL BE REQUIRED.

3. UNLESS OTHERWISE NOTED, ALL UTILITY ADJUSTMENTS WILL BE PERFORMED BY THE UTILITY OR IT'S REPRESENTATIVE. THE CONTRACTOR AND UTILITY OWNERS WILL BE REQUIRED TO COOPERATE WITH EACH OTHER IN ORDER TO EXPEDITE THE WORK REQUIRED BY THIS CONTRACT. ON CONTRACTS WHERE CONSTRUCTION STAKES, LINES, AND GRADES ARE CONTRACT ITEMS, THE CONTRACTOR WILL BE REQUIRED TO PROVIDE RIGHT-OF-WAY OR SLOPE STAKES, DITCH OR STREAM BED GRADES, OR OTHER ESSENTIAL SURVEY STAKING TO PREVENT CONFLICTS WITH THE HIGHWAY CONSTRUCTION. FREQUENTLY, THIS WILL BE REQUIRED AS THE FIRST ITEM OF WORK AND AT ANY LOCATION ON THE PROJECT DIRECTED BY THE ENGINEER.

4. THE CONTRACTOR WILL PROVIDE ALL NECESSARY PROTECTIVE MEASURES TO SAFEGUARD EXISTING UTILITIES FROM DAMAGE DURING CONSTRUCTION OF THIS PROJECT. IN THE EVENT THAT SPECIAL EQUIPMENT IS REQUIRED TO WORK OVER AND AROUND THE UTILITIES, THE CONTRACTOR WILL BE REQUIRED TO FURNISH SUCH EQUIPMENT. THE COST OF PROTECTING UTILITIES FROM DAMAGE AND FURNISHING SPECIAL EQUIPMENT WILL BE INCLUDED IN THE BID PRICE FOR OTHER ITEMS OF CONSTRUCTION.

5. PRIOR TO SUBMITTING HIS BID, THE CONTRACTOR WILL BE SOLELY RESPONSIBLE FOR CONTACTING OWNERS OF ALL AFFECTED UTILITIES IN ORDER TO DETERMINE THE EXTENT TO WHICH RELOCATIONS AND/OR ADJUSTMENTS WILL HAVE UPON THE SCHEDULE OF WORK FOR THE PROJECT. WHILE SOME WORK MAY BE REQUIRED 'AROUND' UTILITY FACILITIES THAT WILL REMAIN IN PLACE, OTHER UTILITY FACILITIES MAY NEED TO BE ADJUSTED CONCURRENTLY WITH THE CONTRACTOR'S OPERATIONS. ADVANCE CLEAR CUTTING MAY BE REQUIRED BY THE ENGINEER AT ANY LOCATION WHERE CLEARING IS CALLED FOR IN THE SPECIFICATIONS AND CLEAR CUTTING IS NECESSARY FOR A UTILITY RELOCATION. ANY ADDITIONAL COST WILL BE INCLUDED IN THE UNIT PRICE BID FOR THE CLEARING ITEM SPECIFIED IN THE PLANS.

6. THE CONTRACTOR SHALL NOTIFY EACH INDIVIDUAL UTILITY OWNER OF HIS PLAN OF OPERATION IN THE AREA OF THE UTILITIES. PRIOR TO COMMENCING WORK, THE CONTRACTOR SHALL CONTACT THE UTILITY OWNERS AND REQUEST THEM TO PROPERLY LOCATE THEIR RESPECTIVE UTILITY ON THE GROUND. THIS NOTIFICATION SHALL BE GIVEN AT LEAST THREE (3) BUSINESS DAYS PRIOR TO COMMENCEMENT OF OPERATIONS AROUND THE UTILITY IN ACCORDANCE WITH TCA 65-31-106.

MISCELLANEOUS NOTE:

7. NOTHING IN THE GENERAL NOTES OR SPECIAL PROVISIONS SHALL RELIEVE THE CONTRACTOR FROM HIS RESPONSIBILITIES TOWARD THE SAFETY AND CONVENIENCE OF THE GENERAL PUBLIC AND THE RESIDENTS ALONG THE PROPOSED CONSTRUCTION AREA.

PAVEMENT-RESURFACING NOTE:

8. THE CONTRACTOR SHALL BE REQUIRED TO COLD PLANE AND PAVE IN THE DIRECTION OF TRAFFIC.

ROAD CLOSURE NOTE:

9. NO LESS THAN SEVEN (7) DAYS PRIOR TO THE CLOSURE OF THE ROAD, THE CONTRACTOR SHALL NOTIFY THE FOLLOWING INDIVIDUALS OR AGENCIES COMPLETELY DESCRIBING THE AFFECTED ROADS AND THE APPROXIMATE DURATION OF THE CONSTRUCTION; THESE PARTIES INCLUDE BUT ARE NOT LIMITED TO: (1) LOCAL LAW ENFORCEMENT, (2) LOCAL FIRE DEPARTMENT, (3) AMBULANCE SERVICE, (4) LOCAL SCHOOL SUPERINTENDENT, (5) UNITED STATES POSTAL SERVICE, AND (6) LOCAL ROAD SUPERINTENDENT.

CONSTRUCTION WORK ZONE AND TRAFFIC CONTROL NOTES:

10. ADVANCE WARNING SIGNS SHALL NOT BE DISPLAYED MORE THAN FORTY-EIGHT (48) HOURS BEFORE PHYSICAL CONSTRUCTION BEGINS. SIGNS MAY BE ERECTED UP TO ONE WEEK BEFORE NEEDED IF THE SIGN FACE IS FULLY COVERED.

11. IF THE CONTRACTOR MOVES OFF THE PROJECT, HE SHALL COVER OR REMOVE ALL UNNEEDED SIGNS AS DIRECTED BY THE ENGINEER. COST REMOVAL, COVERING, AND REINSTALLING SIGNS SHALL NOT BE MEASURED AND PAID FOR SEPARATELY, BUT ALL COSTS SHALL BE INCLUDED IN THE ORIGINAL UNIT PRICE BID FOR ITEM NO. 712-06, SIGNS (CONSTRUCTION) PER SQUARE FOOT.

12. A LONG TERM BUT SPORADIC USE WARNING SIGN, SUCH AS FLAGGER SIGN, MAY REMAIN IN PLACE WHEN NOT REQUIRED PROVIDED THE SIGN FACE IS FULLY COVERED.

13. TRAFFIC CONTROL DEVICES SHALL NOT BE DISPLAYED OR ERECTED UNLESS RELATED CONDITIONS ARE PRESENT NECESSITATING WARNING.

14. USE OF BARRICADES, PORTABLE BARRIER RAILS, VERTICAL PANELS, AND DRUMS SHALL BE LIMITED TO THE IMMEDIATE AREAS OF CONSTRUCTION WHERE A HAZARD IS PRESENT. THESE DEVICES SHALL NOT BE STORED ALONG THE ROADWAY WITHIN THIRTY (30) FEET OF THE EDGE OF THE TRAVELED WAY BEFORE OR AFTER USE UNLESS PROTECTED BY GUARDRAIL, BRIDGE RAIL, AND/OR BARRIERS INSTALLED FOR OTHER PURPOSES FOR ROADWAYS WITH CURRENT ADT'S LESS THAN 1500 AND DESIGN SPEED OF LESS THAN 60 MPH. GREATER OR ON THE OUTSIDE OF A HORIZONTAL CURVE. THESE DEVICES SHALL BE REMOVED FROM THE CONSTRUCTION WORK ZONE WHEN THE ENGINEER DETERMINES THEY ARE NO LONGER NEEDED. WHERE THERE IS INSUFFICIENT RIGHT-OF-WAY TO PROVIDE FOR THIS REQUIRED SETBACK, THE CONTRACTOR SHALL DETERMINE THE ALTERNATE LOCATIONS AND REQUEST THE ENGINEER'S APPROVAL TO USE THEM.

15. THE CONTRACTOR SHALL NOT BE PERMITTED TO PARK ANY VEHICLES OR CONSTRUCTION EQUIPMENT DURING PERIODS OF INACTIVITY, WITHIN THIRTY (30) FEET OF THE EDGE OF PAVEMENT WHEN THE LANE IS OPEN TO TRAFFIC UNLESS PROTECTED BY GUARDRAIL, BRIDGE RAIL, AND/OR BARRIERS INSTALLED FOR OTHER PURPOSES FOR ROADWAYS WITH CURRENT ADT'S LESS THAN 1500 AND DESIGN SPEED OF LESS THAN 60 MPH. THIS DISTANCE SHALL BE INCREASED TO FORTY-FIVE (45) FEET FOR ROADWAYS WITH CURRENT ADT'S OF 1500 OR GREATER AND DESIGN SPEED OF 60 MPH OR GREATER OR ON THE OUTSIDE OF A HORIZONTAL CURVE. PRIVATELY OWNED VEHICLES SHALL NOT BE ALLOWED TO PARK WITHIN THIRTY (30) FEET OF A OPEN TRAFFIC LANE AT ANY TIME UNLESS PROTECTED AS DESCRIBED ABOVE FOR ROADWAYS WITH CURRENT ADT'S LESS THAN 1500 AND DESIGN SPEED OF LESS THAN 60 MPH. THIS DISTANCE SHALL BE INCREASED TO FORTY-FIVE (45) FEET FOR ROADWAYS WITH CURRENT ADT'S OF 1500 OR GREATER AND DESIGN SPEED OF 60 MPH OR GREATER OR ON THE OUTSIDE OF A HORIZONTAL CURVE. WHERE THERE IS INSUFFICIENT RIGHT-OF-WAY TO PROVIDE FOR THIS REQUIRED SETBACK, THE CONTRACTOR SHALL DETERMINE THE ALTERNATE LOCATIONS AND REQUEST THE ENGINEER'S APPROVAL TO USE THEM.

16. ALL DETOUR AND CONSTRUCTION SIGNING SHALL BE IN STRICT ACCORDANCE WITH THE MANUAL ON UNIFORM TRAFFIC CONTROL DEVICES.

SPECIAL NOTES

TRAFFIC CONTROL NOTE:

17. TRAFFIC CONTROL PLAN - SEE SHEET 2C, 2D, AND STD. DWG. NO. T-WZ-10

EROSION PREVENTION AND SEDIMENT CONTROL

18. SEE SHEET 2E FOR EROSION PREVENTION AND SEDIMENT CONTROL DETAILS.

UNOFFICIAL SET
NOT FOR BIDDING

BRADLEY E. BIVENS
REGISTERED ENGINEER
AGRICULTURE COMMERCE
No. 21529
STATE OF TENNESSEE

STATE OF TENNESSEE
DEPARTMENT OF TRANSPORTATION

ESTIMATED ROADWAY QUANTITIES, GENERAL NOTES, AND SPECIAL NOTES

4/9/2014 11:43:35 AM
R:\8196 TDOT Bridge Repair\10 Overton SR36\Dgn\02B Est Roadway Quant & Gen Notes.SHT

TYPE	YEAR	PROJECT NO.	SHEET NO.
CONST.	2014	67008-4243-04	2C

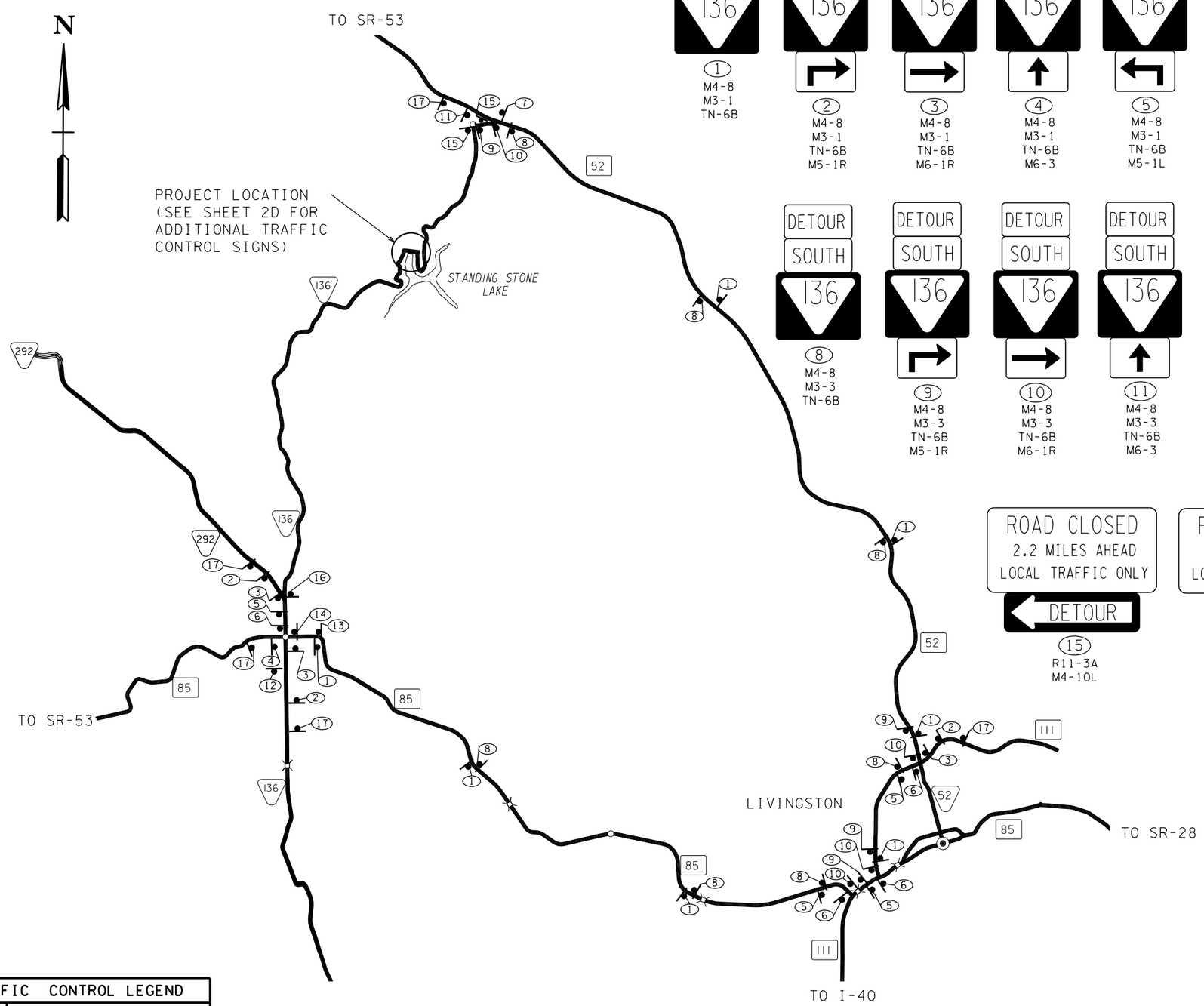

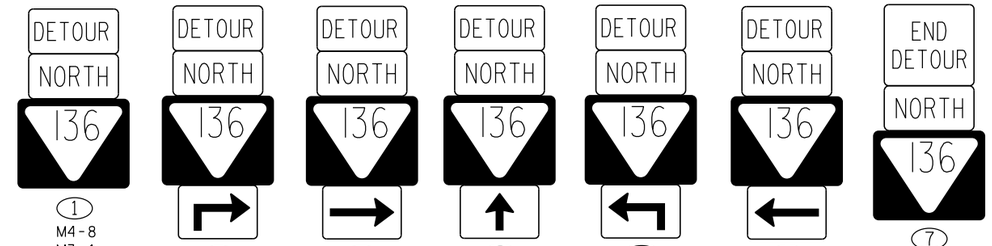

1
M4-8
M3-1
TN-6B

2
M4-8
M3-1
TN-6B
M5-1R

3
M4-8
M3-1
TN-6B
M6-1R

4
M4-8
M3-1
TN-6B
M6-3

5
M4-8
M3-1
TN-6B
M5-1L

6
M4-8
M3-1
TN-6B
M6-1L

7
M4-8a
M3-1
TN-6B

8
M4-8
M3-3
TN-6B

9
M4-8
M3-3
TN-6B
M5-1R

10
M4-8
M3-3
TN-6B
M6-1R

11
M4-8
M3-3
TN-6B
M6-3

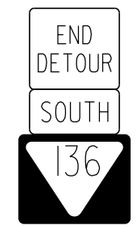

12
M4-8a
M3-3
TN-6B

13
M4-8
M3-3
TN-6B
M5-1L

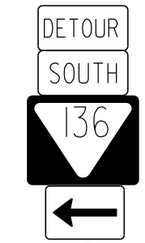

14
M4-8
M3-3
TN-6B
M6-1L

15
R11-3A
M4-10L

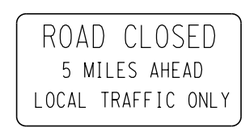

16
R11-3A

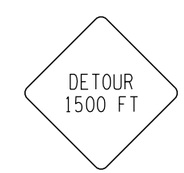

17
W20-2

TRAFFIC CONTROL LEGEND

SYMBOL	ITEM
	WORK ZONE
	SIGN (CONSTRUCTION)
	SIGN (CONSTRUCTION) (2-POST)

NOTE:
SEE CHAPTER 6 OF THE MUTCD (CURRENT VERSION): TEMPORARY TRAFFIC CONTROL, SECTION H, FIGURES 6H-8 AND 6H-9 FOR ADDITIONAL DETAILS AND DIAGRAMS NOT SHOWN HERE.

UNOFFICIAL SET

NOT FOR BIDDING

SEALED BY

STATE OF TENNESSEE
DEPARTMENT OF TRANSPORTATION

DETOUR PLAN

4/9/2014 10:52:42 AM
R:\8196 TDOT Bridge Repair\10 Overton SR136\Dgn\02C - Detour Map.SHT

TYPE	YEAR	PROJECT NO.	SHEET NO.
CONST.	2014	67008-4243-04	2D

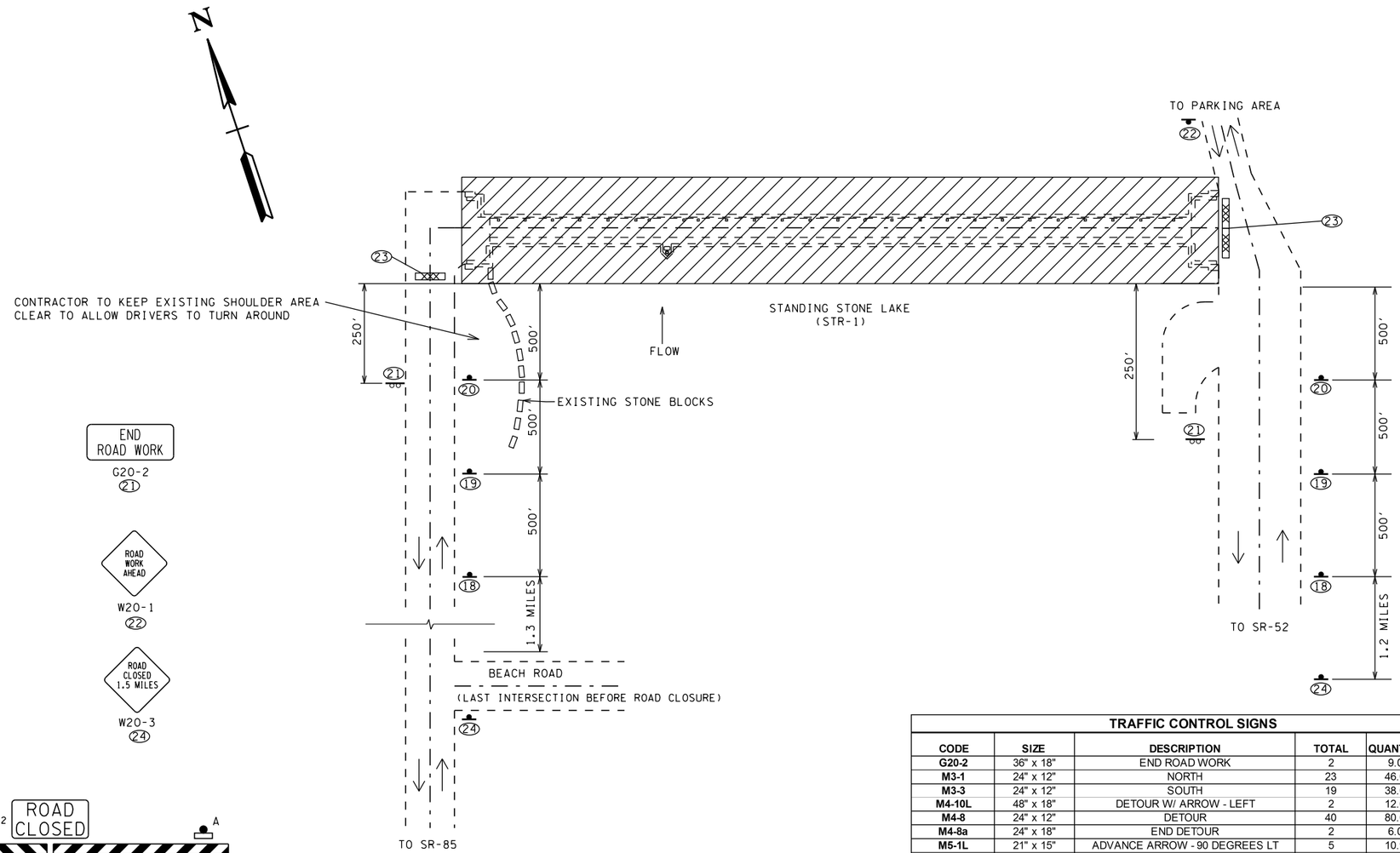

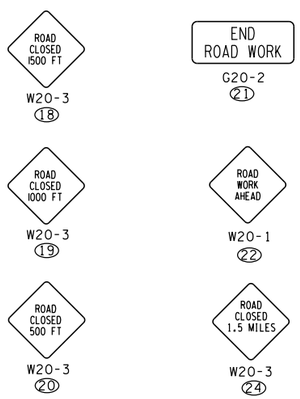

TYPE III BARRICADE ROAD CLOSURE
w/ TYPE A
WARNING LIGHTS
23

TRAFFIC CONTROL LEGEND	
SYMBOL	ITEM
	SIGN (CONSTRUCTION)
	SIGN (CONSTRUCTION) (2-POST)
→	TRAFFIC FLOW
	TEMPORARY BARRICADE (TYPE III)
A	WARNING LIGHT (TYPE A) (LOW-INTENSITY FLASHING)
	WORK ZONE

NOTE:
1. SEE CHAPTER 6 OF THE MUTCD (CURRENT VERSION): TEMPORARY TRAFFIC CONTROL, SECTION H, FIGURES 6H-8 AND 6H-9 FOR ADDITIONAL DETAILS AND DIAGRAMS NOT SHOWN HERE.

2. CONTRACTOR TO PROVIDE TURN-AROUND FOR VEHICLES ON WEST SIDE OF BRIDGE USING EXISTING SHOULDER AS REQUIRED.

TRAFFIC CONTROL SIGNS

CODE	SIZE	DESCRIPTION	TOTAL	QUANTITY	UNIT
G20-2	36" x 18"	END ROAD WORK	2	9.0	SQ. FT.
M3-1	24" x 12"	NORTH	23	46.0	SQ. FT.
M3-3	24" x 12"	SOUTH	19	38.0	SQ. FT.
M4-10L	48" x 18"	DETOUR W/ ARROW - LEFT	2	12.0	SQ. FT.
M4-8	24" x 12"	DETOUR	40	80.0	SQ. FT.
M4-8a	24" x 18"	END DETOUR	2	6.0	SQ. FT.
M5-1L	21" x 15"	ADVANCE ARROW - 90 DEGREES LT	5	10.9	SQ. FT.
M5-1R	21" x 15"	ADVANCE ARROW - 90 DEGREES RT	7	15.3	SQ. FT.
M6-1L	21" x 15"	DIRECTIONAL ARROW - LEFT	5	10.9	SQ. FT.
M6-1R	21" x 15"	DIRECTIONAL ARROW - RIGHT	7	15.3	SQ. FT.
M6-3	21" x 15"	DIRECTIONAL ARROW - STRAIGHT	2	4.4	SQ. FT.
R11-2	48" x 30"	ROAD CLOSED	2	20.0	SQ. FT.
R11-3A	60" x 30"	ROAD CLOSED LOCAL TRAFFIC ONLY	3	37.5	SQ. FT.
TN-6b	30" x 24"	SECONDARY STATE ROUTE- 3 DIGIT (136)	42	210.0	SQ. FT.
W20-1	36" x 36"	ROAD WORK AHEAD	1	9.0	SQ. FT.
W20-2	36" x 36"	DETOUR 1500 FT	5	45.0	SQ. FT.
W20-3	36" x 36"	ROAD CLOSED 1500 FT	2	18.0	SQ. FT.
W20-3	36" x 36"	ROAD CLOSED 1000 FT	2	18.0	SQ. FT.
W20-3	36" x 36"	ROAD CLOSED 500 FT	2	18.0	SQ. FT.
W20-3	36" x 36"	ROAD CLOSED 1.5 MILES	2	18.0	SQ. FT.
		TOTAL 712-06 SIGNS (CONSTRUCTION)		641	SQ. FT.

TRAFFIC CONTROL QUANTITIES

ITEM NUMBER	DESCRIPTION	QUANTITY	UNIT
712-01	TRAFFIC CONTROL	1	L.S.
712-05.01	WARNING LIGHTS (TYPE A)	4	EACH
712-06	SIGNS (CONSTRUCTION)	641	S.F.
712-07.03	TEMPORARY BARRICADES (TYPE III)	63	L.F.

UNOFFICIAL SET

NOT FOR BIDDING

SEALED BY

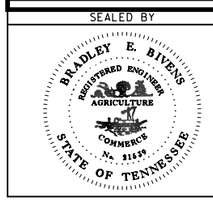

STATE OF TENNESSEE
DEPARTMENT OF TRANSPORTATION

TRAFFIC CONTROL PLAN

4/9/2014 11:28:45 AM
R:\8196 TDOT Bridge Repair\10 Overton SR136\Dgn\02D - Traffic ControlPlan.SHT

TENNESSEE D.O.T.
DESIGN DIVISION
FILE NO.

TYPE	YEAR	PROJECT NO.	SHEET NO.
CONST.	2014	67008-4243-04	2E

EROSION PREVENTION AND SEDIMENT CONTROL LEGEND

SYMBOL	ITEM	STD. DWG.
* SFB * SFB	SILT FENCE WITH WIRE BACKING •	EC-STR-3C
* HVF * HVF	HIGH VISIBILITY FENCE	S-F-1

EROSION PREVENTION & SEDIMENT CONTROL QUANTITIES

	ITEM NO.	DESCRIPTION	UNIT	QTY
①	203-06	WATER	M.G.	1
①②	209-08.02	TEMPORARY SILT FENCE (W/ BACKING)	L.F.	20
	209-13.04	TURBIDITY CURTAIN	L.F.	350
①③	707-08.11	HIGH VISIBILITY CONSTRUCTION FENCE	L.F.	267
①④	801-01	SEEDING (WITH MULCH)	UNIT	0.5
①④	805-12.01	EROSION CONTROL BLANKET (TYP I)	S.Y.	10

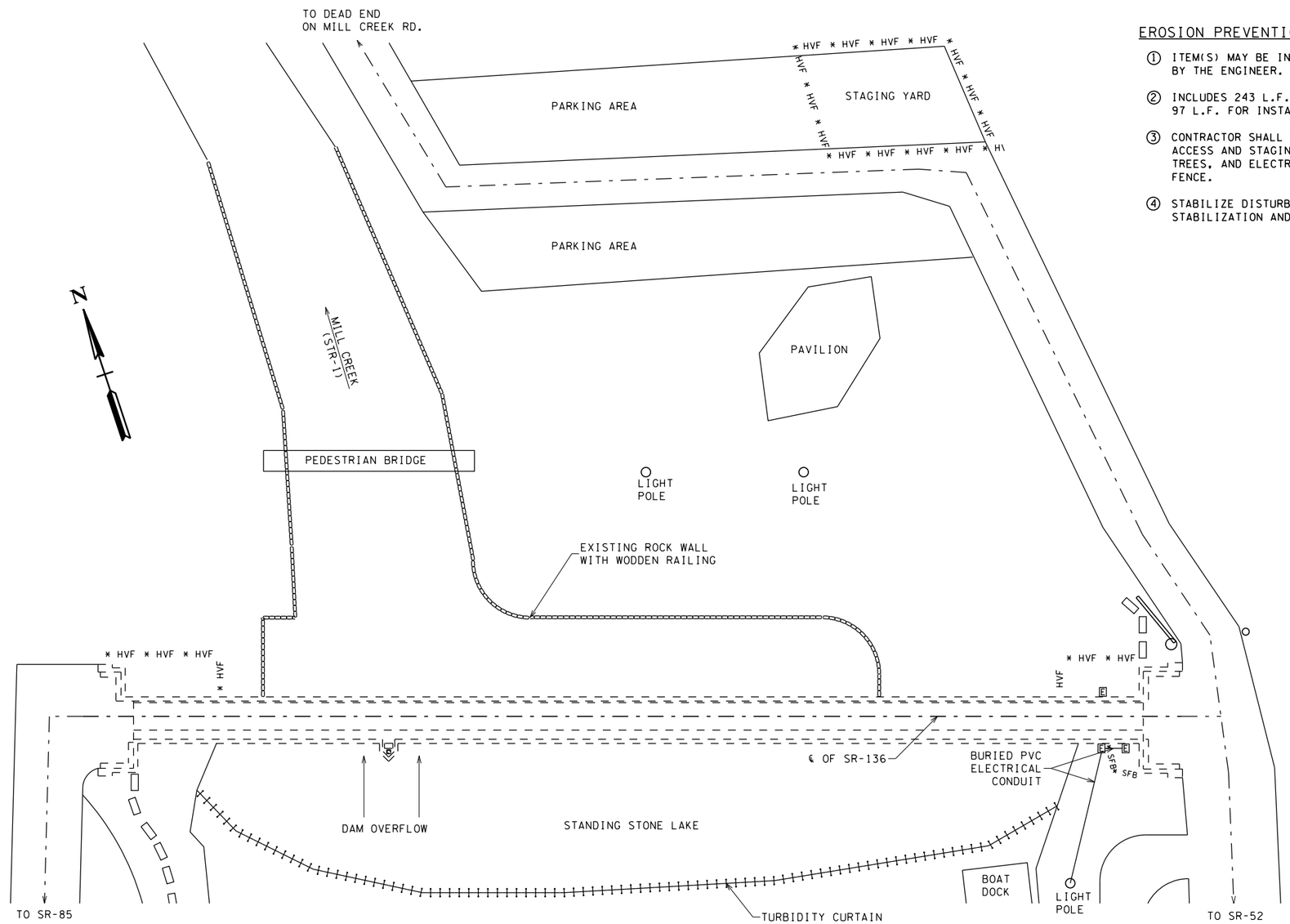

EROSION CONTOL PLAN

NOT TO SCALE

EROSION PREVENTION AND SEDIMENT CONTROL NOTES

① ITEM(S) MAY BE INCREASED, DECREASED, OR ELIMINATED AS DIRECTED BY THE ENGINEER.

② INCLUDES 243 L.F. REQUIRED FOR PERIMETER CONTROL. MAY INCLUDE 97 L.F. FOR INSTALLATION OF OPTIONAL 15'x15' SEDIMENT FILTER BAG.

③ CONTRACTOR SHALL COORDINATE WITH STATE PARK OFFICIALS TO DETERMINE ACCESS AND STAGING AREA LOCATION/REQUIREMENTS. LAKE, STAGING AREA, TREES, AND ELECTRIC UTILITIES SHALL BE PROTECTED WITH HIGH VISIBILITY FENCE.

④ STABILIZE DISTURBED AREAS WITH SEED AND MULCH AS TEMPORARY STABILIZATION AND INSTALL SOD AS FINAL STABILIZATION.

UNOFFICIAL SET

NOT FOR BIDDING

BRADLEY E. BIVENS
REGISTERED ENGINEER
AGRICULTURE
COMMERCE
No. 21559
STATE OF TENNESSEE

STATE OF TENNESSEE
DEPARTMENT OF TRANSPORTATION

EROSION CONTROL PLAN

4/9/2014 11:45:02 AM
R:\8196 TDOT Bridge Repair\10 Overton SR136\Dgn\02E - Erosion ControlPlan.dgn

PROJECT NO.	YEAR	SHEET NO.
67008-4243-04	2014	

REVISIONS

NO.	DATE	BY	BRIEF DESCRIPTION

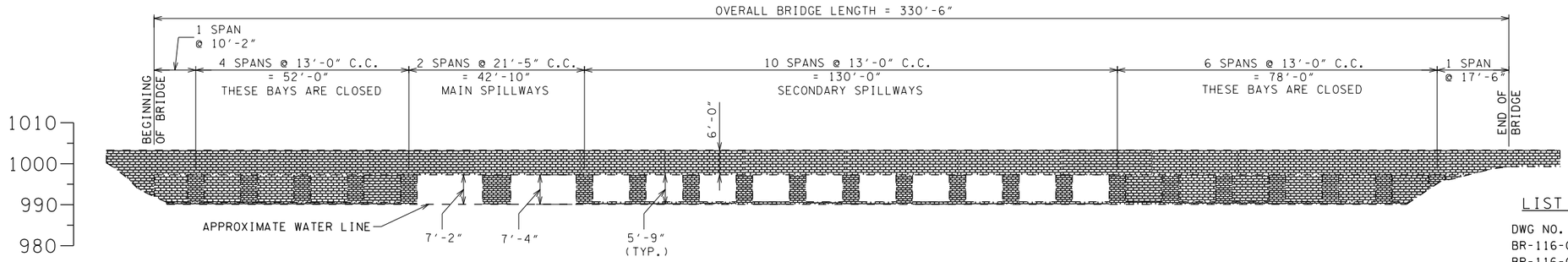

SOUTH (LAKE SIDE) ELEVATION VIEW

SCALE: 1/16" = 1'

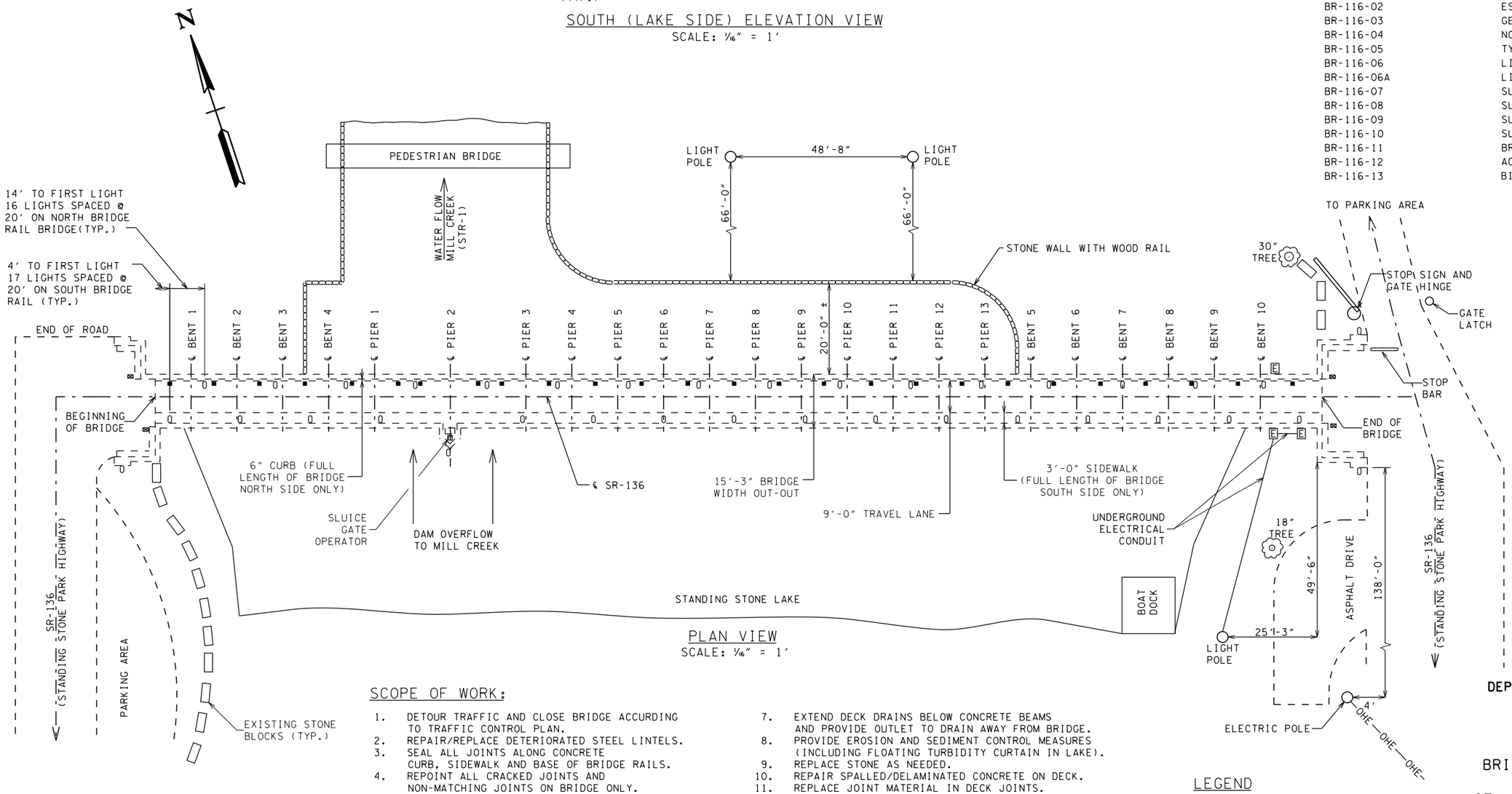

PLAN VIEW

SCALE: 1/16" = 1'

LIST OF BRIDGE DRAWINGS

DWG NO.	LAST REV DATE	TITLE
BR-116-01		LAYOUT OF BRIDGE TO BE REPAIRED
BR-116-02		ESTIMATED BRIDGE QUANTITIES
BR-116-03		GENERAL NOTES
BR-116-04		NORTH ELEVATION VIEW
BR-116-05		TYPICAL SECTION THROUGH DAM
BR-116-06		LINTEL REPAIR DETAILS (1 OF 2)
BR-116-06A		LINTEL REPAIR DETAILS (2 OF 2)
BR-116-07		SUPERSTRUCTURE REPAIR DETAILS (1 OF 3)
BR-116-08		SUPERSTRUCTURE REPAIR DETAILS (2 OF 3)
BR-116-09		SUPERSTRUCTURE REPAIR DETAILS (3 OF 3)
BR-116-10		SUBSTRUCTURE REPAIR DETAILS
BR-116-11		BRIDGE REPAIR DETAILS
BR-116-12		ACCESS DOOR DETAILS
BR-116-13		BILL OF STEEL

LIST OF REFERENCE DRAWINGS

DWG NO.	TITLE
BR-5-26	1991 REPAIR PLANS
BR-5-28	
BR-5-32	
BR-5-33	

UNOFFICIAL SET

NOT FOR BIDDING

STATE OF TENNESSEE
BRADLEY E. BIVENS
REGISTERED ENGINEER
AGRICULTURE
COMMERCE
No. 21539

SCOPE OF WORK:

1. DETOUR TRAFFIC AND CLOSE BRIDGE ACCURDING TO TRAFFIC CONTROL PLAN.
2. REPAIR/REPLACE DETERIORATED STEEL LINTELS.
3. SEAL ALL JOINTS ALONG CONCRETE CURB, SIDEWALK AND BASE OF BRIDGE RAILS.
4. REPOINT ALL CRACKED JOINTS AND NON-MATCHING JOINTS ON BRIDGE ONLY.
5. REMOVE EXISTING ASPHALT WEARING SURFACE AND PLACE NEW 3¼" (MIN.) TO 6" (MAX.) SANDWICH SEAL ASPHALT OVERLAY.
6. PROVIDE FULL AND PARTIAL DEPTH CONCRETE DECK REPAIR.
7. EXTEND DECK DRAINS BELOW CONCRETE BEAMS AND PROVIDE OUTLET TO DRAIN AWAY FROM BRIDGE.
8. PROVIDE EROSION AND SEDIMENT CONTROL MEASURES (INCLUDING FLOATING TURBIDITY CURTAIN IN LAKE).
9. REPLACE STONE AS NEEDED.
10. REPAIR SPALLED/DELAMINATED CONCRETE ON DECK.
11. REPLACE JOINT MATERIAL IN DECK JOINTS.
12. REPAIR SPALLED/DELAMINATED CONCRETE BEAMS, CAPS, COLUMNS, ABUTMENTS, SUPPORT WALLS, ETC. WITH QUICK SET PATCHING MATERIAL AND/OR HIGH EARLY STRENGTH CONCRETE.
13. REPAIR ALL CRACKS WITH EPOXY.
14. PROVIDE LOCKING ACCESS GATE ON BOTH ENDS OF DAM.

LEGEND

0 BRIDGE LIGHTS (RECESSED IN STONE BRIDGE RAIL)

■ BRIDGE DECK DRAINS

⊠ PADDLE BOARD SIGNS

E ELECTRICAL BOXES

STATE OF TENNESSEE
DEPARTMENT OF TRANSPORTATION

LAYOUT OF BRIDGE TO BE REPAIRED

BRIDGE NO. 67-SR136-14.30
STATE ROUTE 136
(STANDING STONE PARK HIGHWAY)
OVER
MILL CREEK (PARK LAKE)
OVERTON COUNTY
2014

DESIGNED BY	MRP	DATE	10/2013
DRAWN BY	MRP	DATE	10/2013
SUPERVISED BY	BEB	DATE	10/2013
CHECKED BY	RMD	DATE	10/2013

BR-116-01

PROJECT NO.	YEAR	SHEET NO.
67008-4243-04	2014	

REVISIONS

NO.	DATE	BY	BRIEF DESCRIPTION

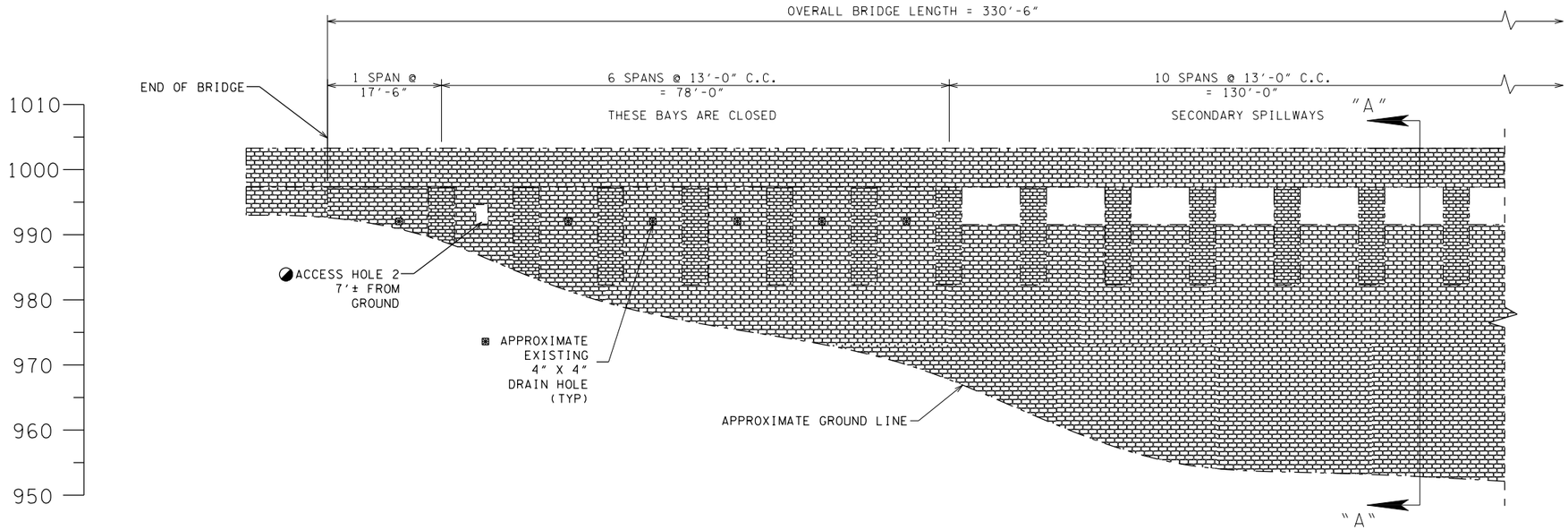

NOTE: SEE BR-116-05 FOR SECTION VIEWS "A"-"A" AND "B"-"B"

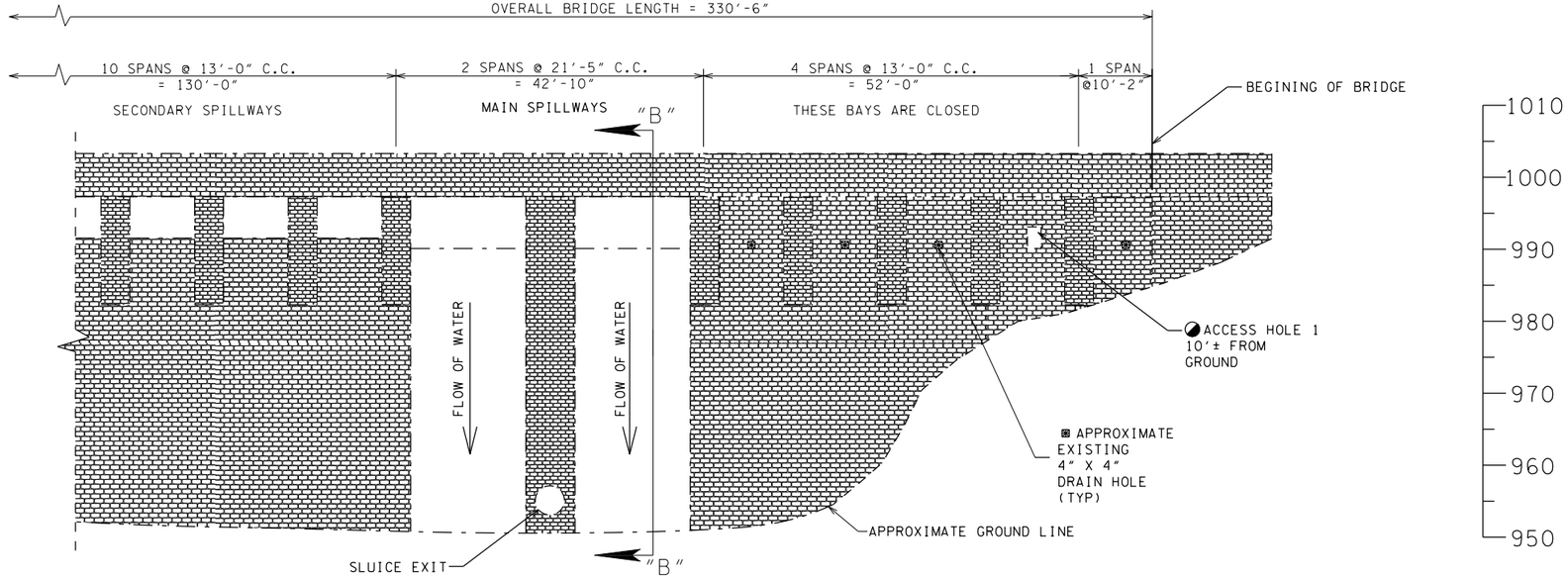

NOTES: ◐ DENOTES LOCKING ACCESS DOORS AS SHOWN ON DRAWING BR-116-12 TO BE INSTALLED AT BOTH ACCESS HOLES.

▩ DENOTES TEN (10) DRAIN OPENINGS TO BE CLEANED OF DEBRIS AND SEDIMENT, TRASH, ETC. TO PROVIDE PROPER DRAINAGE FROM INSIDE CLOSED BAYS. SEE DETAILS ON DRAWING BR-116-07 FOR PROPOSED UNDER DRAIN SYSTEM.

UNOFFICIAL SET

NOT FOR BIDDING

STATE OF TENNESSEE
DEPARTMENT OF TRANSPORTATION

NORTH ELEVATION VIEW

BRIDGE NO. 67-SR136-14.30
STATE ROUTE 136
(STANDING STONE PARK HIGHWAY)
OVER
MILL CREEK (PARK LAKE)
OVERTON COUNTY
2014

DESIGNED BY	MRP	DATE	10/2013
DRAWN BY	MRP	DATE	10/2013
SUPERVISED BY	BEB	DATE	10/2013
CHECKED BY	RMD	DATE	10/2013

BR-116-04

PROJECT NO.	YEAR	SHEET NO.
67008-4243-04	2014	

REVISIONS

NO.	DATE	BY	BRIEF DESCRIPTION

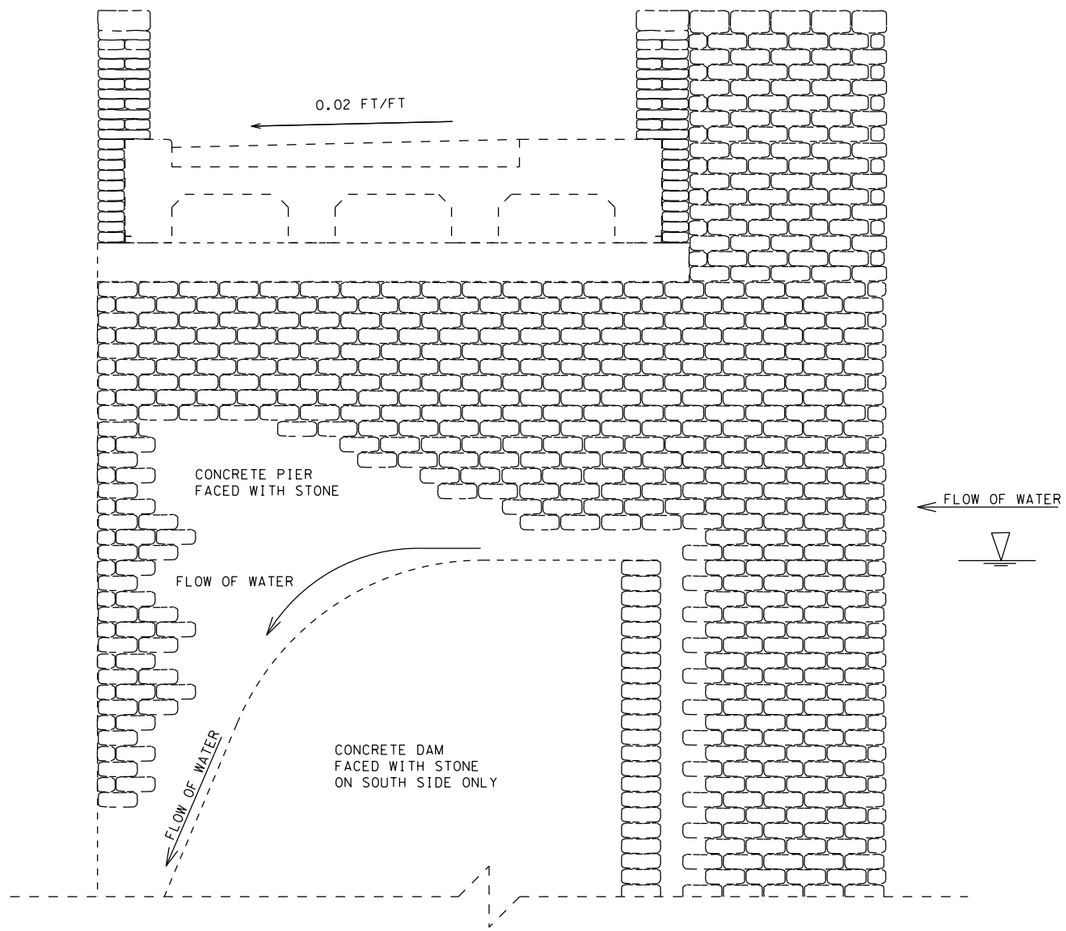

SECTION "B"-"B"
TYPICAL SECTION THROUGH MAIN SPILLWAY
LOOKING FORWARD FROM BEGINNING OF BRIDGE
SCALE: ½" = 1'

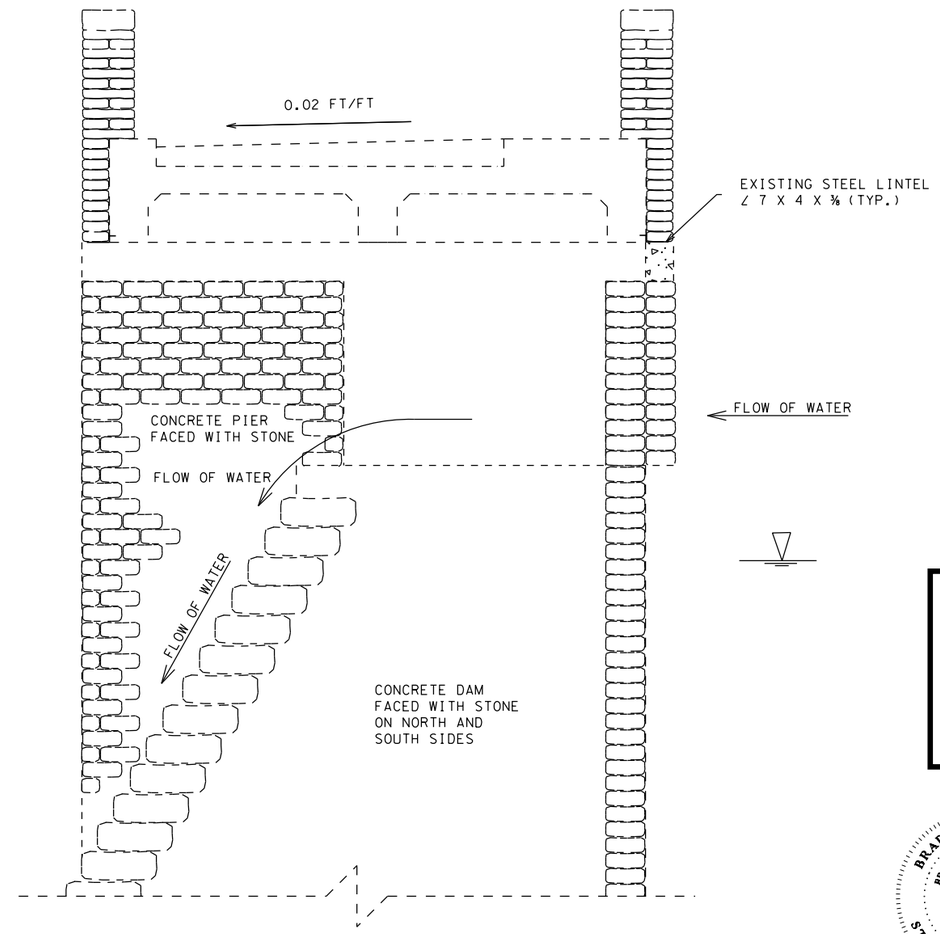

SECTION "A"-"A"
TYPICAL SECTION THROUGH SECONDARY SPILLWAY
LOOKING FORWARD FROM BEGINNING OF BRIDGE
SCALE: ½" = 1'

UNOFFICIAL SET

NOT FOR BIDDING

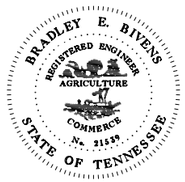

STATE OF TENNESSEE
DEPARTMENT OF TRANSPORTATION

TYPICAL SECTIONS THROUGH DAM

BRIDGE NO. 67-SR136-14.30
STATE ROUTE 136
(STANDING STONE PARK HIGHWAY)
OVER
MILL CREEK (PARK LAKE)
OVERTON COUNTY
2014

DESIGNED BY	MRP	DATE	10/2013
DRAWN BY	MRP	DATE	10/2013
SUPERVISED BY	BEB	DATE	10/2013
CHECKED BY	RMD	DATE	10/2013

BR-116-05

PROJECT NO.	YEAR	SHEET NO.
67008-4243-04	2014	

REVISIONS

NO.	DATE	BY	BRIEF DESCRIPTION

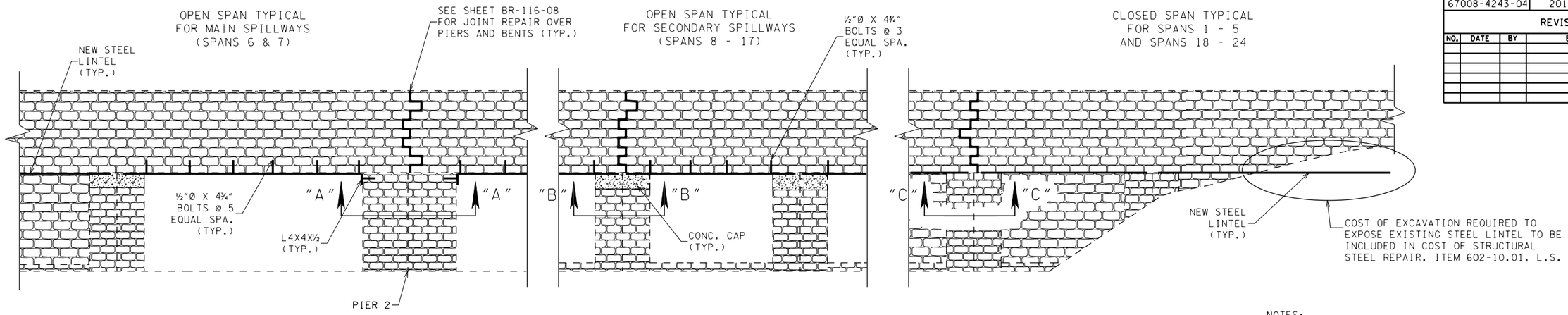

SOUTH ELEVATION VIEW

(LAKE SIDE)
SCALE: 1/16" = 1'

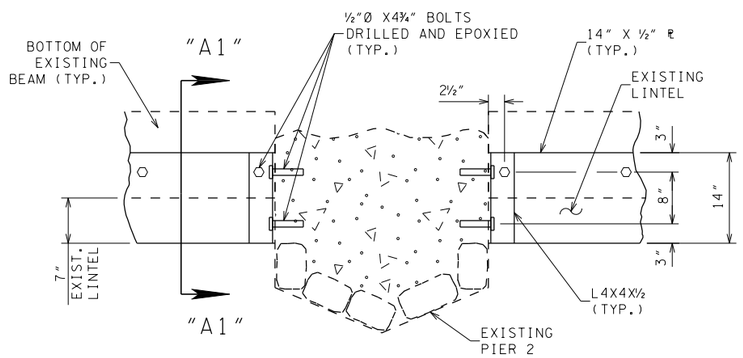

SECTION "A"-"A"
SHOWING LINTEL CONNECTION TO PIER 2
(MAIN SPILLWAYS)
NO SCALE

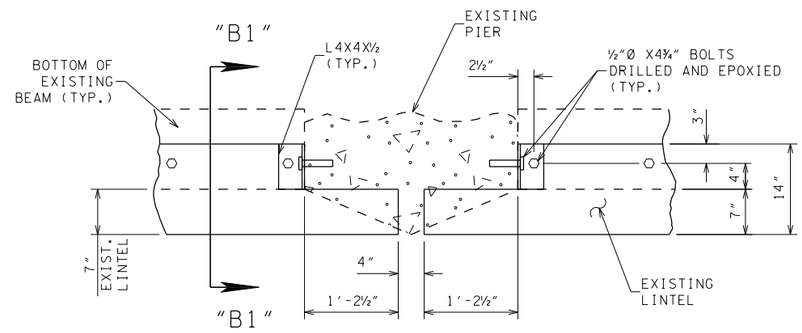

SECTION "B"-"B"
SHOWING LINTEL NOTCHED AT ENDS
FOR OPEN SPANS (SECONDARY SPILLWAYS)
NO SCALE

NOTES:

ALL LABOR AND MATERIALS REQUIRED TO INSTALL NEW 7"x⅜" GRADE A36 STEEL PLATE FOR EACH SPAN ON BOTH SIDES OF BRIDGE SHALL BE PAID FOR UNDER ITEM 602-10.01, L.S.

CONTRACTOR SHALL BE RESPONSIBLE FOR ENSURING THAT EXISTING STONE WORK IS PROTECTED FROM DAMAGE DURING ALL REPAIRS. ANY DAMAGE THAT OCCURS DURING CONSTRUCTION SHALL BE AT THE EXPENSE TO THE CONTRACTOR.

CONTRACTOR SHALL FIELD VERIFY ALL MEASUREMENTS BEFORE ORDERING LINTELS.

CONTRACTOR MAY SUBMIT ALTERNATE LINTEL CONNECTION DETAILS TO BE APPROVED BY THE ENGINEER AND SHALL BE AT NO COST TO THE PROJECT.

INJECTABLE EPOXY SHALL MATCH THE COLOR OF THE EXISTING STONE.

ALL COST FOR EPOXY USED FOR ANCHORAGE AND TO FILL JOINTS BETWEEN ENXISTING AND NEW LINTEL SHALL BE INCLUDED UNDER ITEM NO. 602-10.01, STRUCTURAL STEEL REPAIRS, LS.

ALL COST FOR THE ½"Ø X 4¾" BOLTS AND THE EPOXY ANCHORS SHALL BE INCLUDED UNDER ITEM NO. 602-10.01, STRUCTURAL STEEL REPAIRS, LS.

FOR THE P[illegible] LINTEL SEE GENERAL NOTES SHEET BR-[illegible]

UNOFFICIAL SET

NOT FOR BIDDING

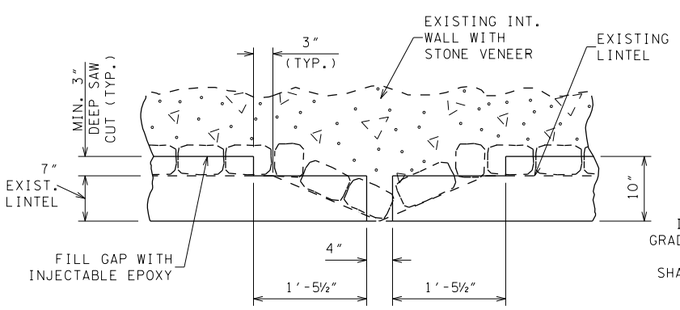

SECTION "C"-"C"
SHOWING LINTEL NOTCHED AT ENDS
FOR CLOSED SPANS
NO SCALE

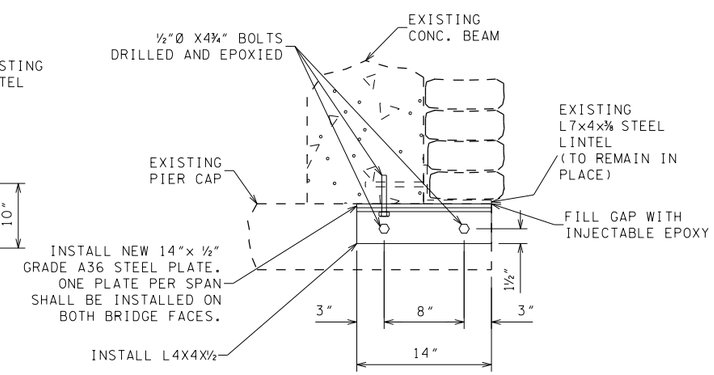

SECTION "A1"-"A1"
SHOWING LINTEL INSTALLATION AT
OPEN SPANS (MAIN SPILLWAYS)
NO SCALE

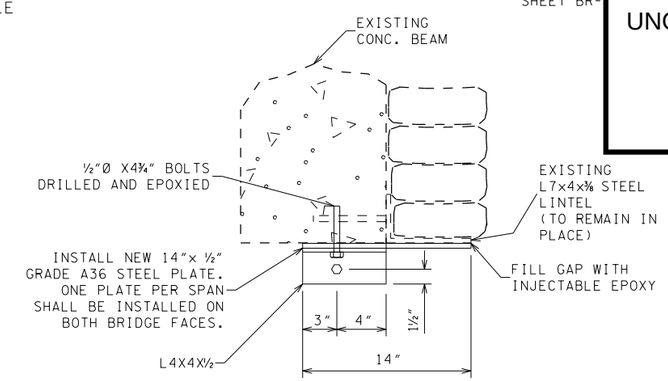

SECTION "B1"-"B1"
SHOWING LINTEL INSTALLATION AT
OPEN SPANS (SECONDARY SPILLWAYS)
NO SCALE

BRADLEY E. BIVENS
REGISTERED ENGINEER
AGRICULTURE
COMMERCE
No. 21539
STATE OF TENNESSEE

STATE OF TENNESSEE
DEPARTMENT OF TRANSPORTATION

LINTEL REPAIR DETAILS 1 OF 2

BRIDGE NO. 67-SR136-14.30
STATE ROUTE 136
(STANDING STONE PARK HIGHWAY)
OVER
MILL CREEK (PARK LAKE)
OVERTON COUNTY
2014

DESIGNED BY	MRP	DATE	10/2013
DRAWN BY	MRP	DATE	10/2013
SUPERVISED BY	BEB	DATE	10/2013
CHECKED BY	RMD	DATE	10/2013

BR-116-06

PROJECT NO.	YEAR	SHEET NO.
67008-4243-04	2014	

REVISIONS

NO.	DATE	BY	BRIEF DESCRIPTION

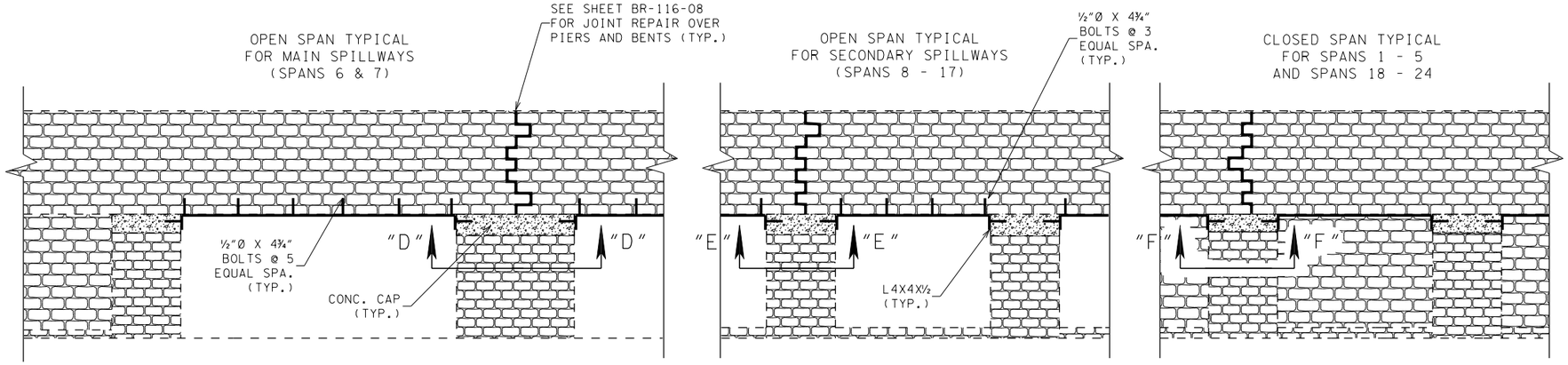

NORTH ELEVATION VIEW

DOWN STEAM SIDE
SCALE: 1/16" = 1'

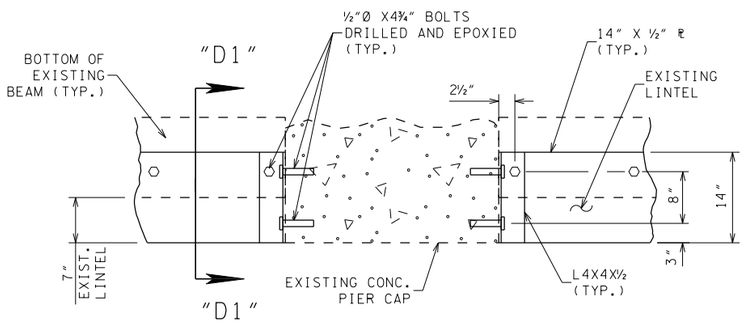

SECTION "D"-"D" & "E"-"E"

SHOWING LINTEL CONNECTION TO
OPEN SPANS (MAIN & SECONDARY SPILLWAYS)
NO SCALE

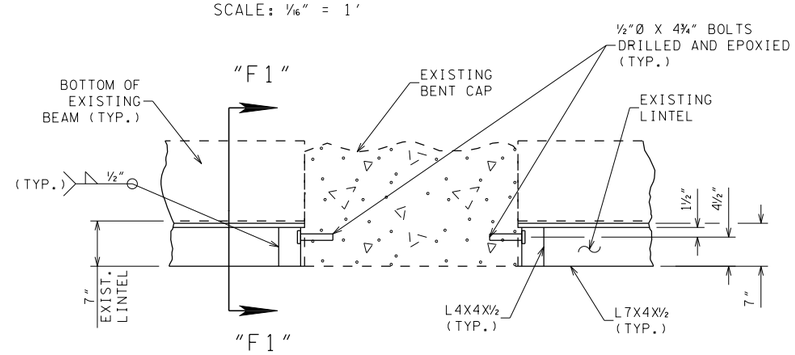

SECTION "F"-"F"

SHOWING LINTEL CONNECTION TO CLOSED SPANS
NO SCALE

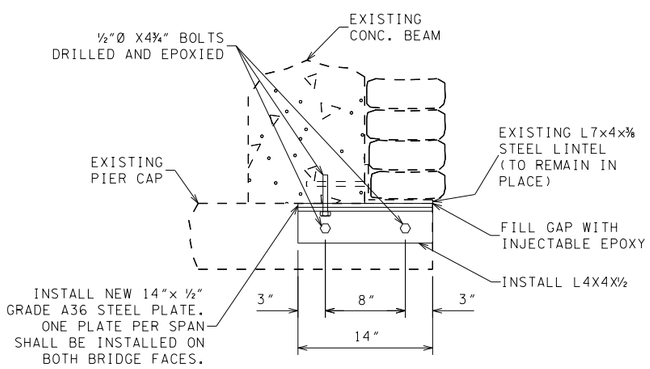

SECTION "D1"-"D1"

SHOWING LINTEL CONNECTION TO
OPEN SPANS (MAIN & SECONDARY SPILLWAYS)
NO SCALE

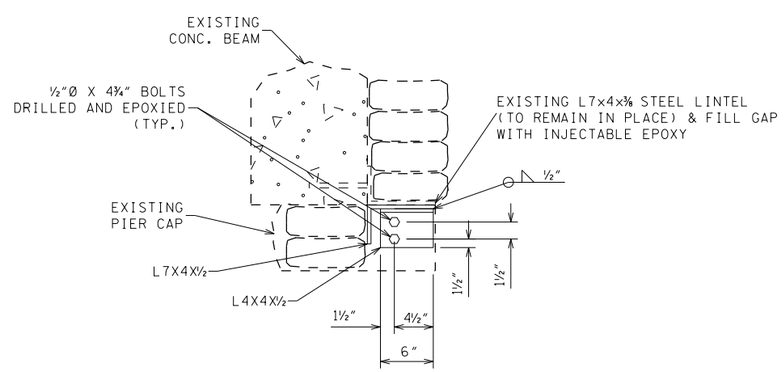

SECTION "F1"-"F1"

SHOWING LINTEL INSTALLATION AT CLOSED SPANS
NO SCALE

NOTES:

ALL LABOR AND MATERIALS REQUIRED TO INSTALL NEW 7"×⅜" GRADE A36 STEEL PLATE FOR EACH SPAN ON BOTH SIDES OF BRIDGE SHALL BE PAID FOR UNDER ITEM 602-10.01, L.S.

CONTRACTOR SHALL BE RESPONSIBLE FOR ENSURING THAT EXISTING STONE WORK IS PROTECTED FROM DAMAGE DURING ALL REPAIRS. ANY DAMAGE THAT OCCURS DURING CONSTRUCTION SHALL BE AT THE EXPENSE TO THE CONTRACTOR.

CONTRACTOR SHALL FIELD VERIFY ALL MEASUREMENTS BEFORE ORDERING LINTELS.

CONTRACTOR MAY SUBMIT ALTERNATE LINTEL CONNECTION DETAILS TO BE APPROVED BY THE ENGINEER AND SHALL BE AT NO COST TO THE PROJECT.

INJECTABLE EPOXY SHALL MATCH THE COLOR OF THE EXISTING STONE.

ALL COST FOR EPOXY USED FOR ANCHORAGE AND TO FILL JOINTS BETWEEN ENXISTING AND NEW LINTEL SHALL BE INCLUDED UNDER ITEM NO. 602-10.01, STRUCTURAL STEEL REPAIRS, LS.

ALL COST FOR THE ½"Ø X 4¾" BOLTS AND THE EPOXY ANCHORS SHALL BE INCLUDED UNDER ITEM NO. 602-10.01, STRUCTURAL STEEL REPAIRS, LS.

FOR THE PAINTING OF THE STEEL LINTEL SEE GENERAL NOTES SHEET BR-116-03.

UNOFFICIAL SET

NOT FOR BIDDING

STATE OF TENNESSEE
DEPARTMENT OF TRANSPORTATION

LINTEL REPAIR DETAILS 2 OF 2

BRIDGE NO. 67-SR136-14.30
STATE ROUTE 136
(STANDING STONE PARK HIGHWAY)
OVER
MILL CREEK (PARK LAKE)
OVERTON COUNTY
2014

DESIGNED BY	MRP	DATE	10/2013
DRAWN BY	MRP	DATE	10/2013
SUPERVISED BY	BEB	DATE	10/2013
CHECKED BY	RMD	DATE	10/2013

BR-116-06A

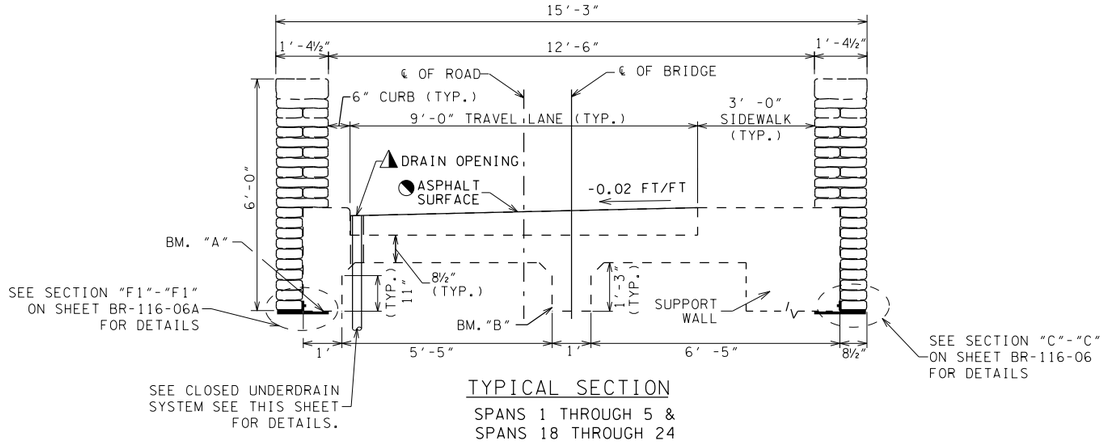

TYPICAL SECTION

SPANS 1 THROUGH 5 & SPANS 18 THROUGH 24 (CLOSED SPANS) (LOOKING FORWARD)

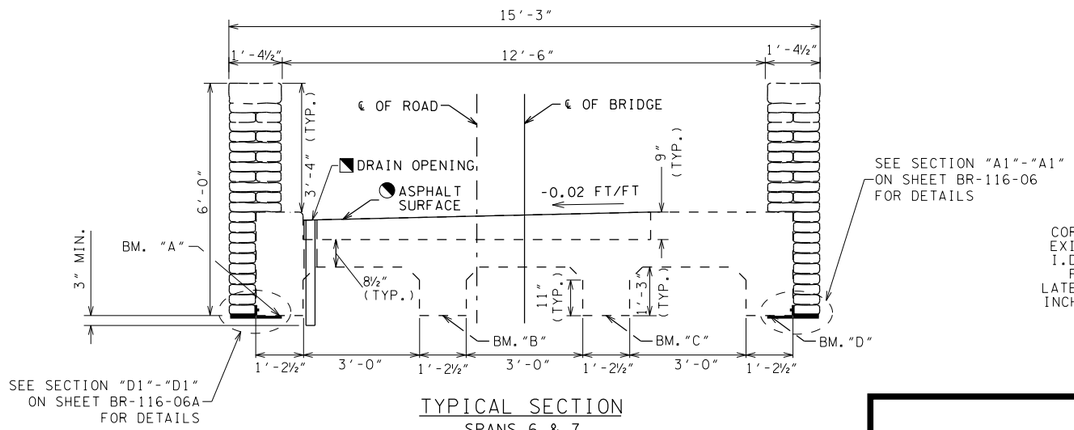

TYPICAL SECTION

SPANS 6 & 7 (MAIN SPILLWAYS) (LOOKING FORWARD)

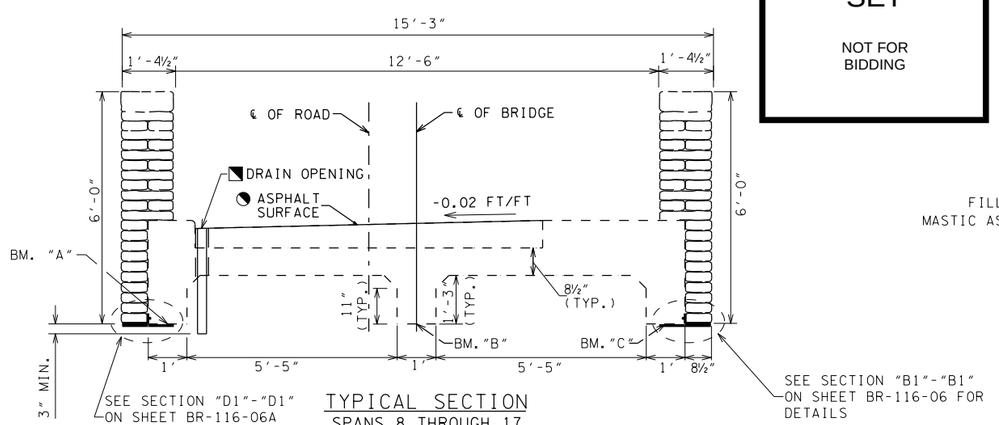

TYPICAL SECTION

SPANS 8 THROUGH 17 (SECONDARY SPILLWAYS) (LOOKING FORWARD)

UNOFFICIAL SET

NOT FOR BIDDING

▲ FOR CLOSED INTERIOR SPANS (SPANS 1 THROUGH 5 AND 18 THROUGH 24), INSERT 3" Ø (I.D.) SCH. 40 PVC PIPE INTO 4"x4" SQUARE OPENING. INSTALL CLOSED UNDERDRAIN SYSTEM ACCORDING TO DRAIN EXTENSION DETAIL THIS SHEET. USE HEAT RESISTANT SCH. 40 PVC FLANGE FITTING ON TOP OF DECK AS SHOWN IN DETAIL "B" THIS SHEET.

◥ FOR OPEN SPANS 6 THROUGH 17, INSERT 3" Ø (I.D.) SCH. 40 PVC PIPE INTO 4"x4" SQUARE OPENING. PIPE SHALL EXTEND MINIMUM 3" BELOW BOTTOM OF DECK BEAMS. NO UNDERDRAIN SYSTEM IS REQUIRED FOR OPEN SPANS. USE HEAT RESISTANT SCH. 40 PVC FLANGE FITTING ON TOP OF DECK AS SHOWN IN DETAIL "B" THIS SHEET.

◔ NEW BRIDGE DECK SEAL AND SANDWICH SEAL ASPHALT OVERLAY SHALL BE INSTALLED SEE DETAILS ON DWG. BR-116-09.

NOTE: THE COST OF MATERIAL AND THE MODIFICATION OF 26 DECK DRAINS, WHICH INCLUDES THE INSTALLATION OF TWELVE (12) UNDER DRAIN SYSTEMS AND FOURTEEN (14) DECK DRAIN PIPES, ARE TO BE INCLUDED UNDER ITEM NO. 604-10.35 MODIFY BRIDGE DECK DRAIN SYSTEM.

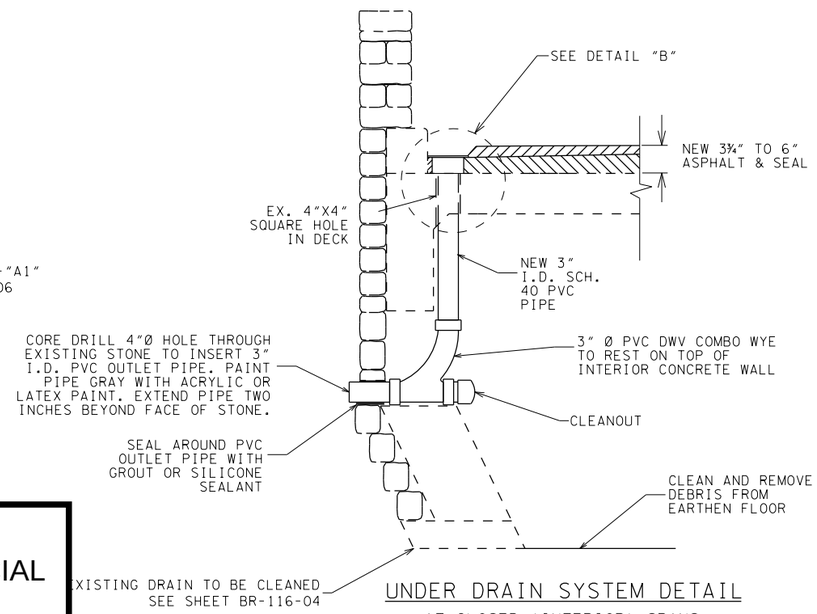

UNDER DRAIN SYSTEM DETAIL

AT CLOSED (INTERIOR) SPANS
SPANS 1 THROUGH 5 &
SPANS 18 THROUGH 24

NO SCALE

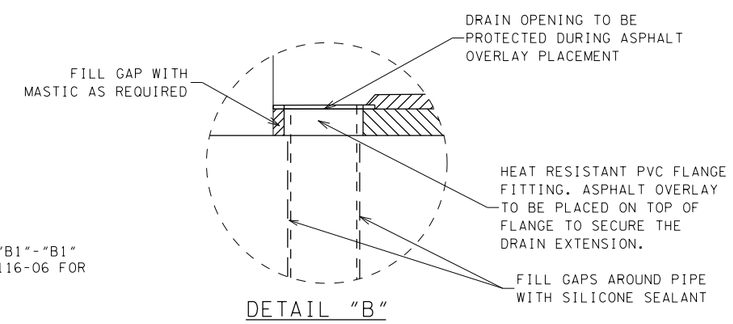

DETAIL "B"

PROJECT NO.	YEAR	SHEET NO.
67008-4243-04	2014	

REVISIONS

NO.	DATE	BY	BRIEF DESCRIPTION

ESTIMATED CONCRETE BEAM REPAIRS

SPAN	BEAM *	604-10.54 CONCRETE REPAIR S.F.	604-10.62 EPOXY INJECTION L.F.
2	A	7.0	2.0
2	B	1.0	-
3	A	6.0	-
5	A	-	2.0
6	A	6.0	-
7	C	1.0	10.0
8	A	3.0	15.0
8	B	3.0	40.0
9	A	2.0	15.0
9	B	2.0	20.0
9	C	3.0	-
10	A	9.0	10.0
10	B	12.0	30.0
10	C	2.0	20.0
11	A	3.0	-
11	C	1.0	-
12	A	7.0	-
12	B	14.0	35.0
12	C	2.0	10.0
13	A	10.0	-
13	B	26.0	20.0
13	C	3.0	10.0
14	A	14.0	-
14	B	20.0	20.0
14	C	-	10.0
15	A	11.0	-
15	B	-	26.0
15	C	5.0	-
16	A	20.0	-
16	B	-	16.0
16	C	5.0	1.0
17	A	17.0	13.0
17	B	-	16.0
17	C	10.0	-
18	A	3.0	-
18	B	-	2.0
19	A	2.0	-
20	A	2.0	-
21	A	2.0	-
22	B	1.0	-
24	A	4.0	-
TOTAL		239.0	343.0

*SEE TYPICAL SECTIONS THIS SHEET FOR BEAM CONFIGURATIONS.

NOTE: SEE SHEET BR-116-11 FOR BEAM REPAIR DETAILS.

STATE OF TENNESSEE
DEPARTMENT OF TRANSPORTATION

SUPERSTRUCTURE REPAIR DETAILS (1 OF 3)

BRIDGE NO. 67-SR136-14.30
STATE ROUTE 136
(STANDING STONE PARK HIGHWAY)
OVER MILL CREEK (PARK LAKE)
OVERTON COUNTY
2014

DESIGNED BY	MRP	DATE	10/2013
DRAWN BY	MRP	DATE	10/2013
SUPERVISED BY	BEB	DATE	10/2013
CHECKED BY	RMD	DATE	10/2013

BR-116-07

PROJECT NO.	YEAR	SHEET NO.
67008-4243-04	2014	

REVISIONS

NO.	DATE	BY	BRIEF DESCRIPTION

NOTE: SEE SHEET BR-116-10 AND BR-116-11 FOR GENERAL CONCETE REPAIR NOTES AND DETAILS OF SPALLED CONCRETE SURFACE AND REPAIR.

NOTE: CONCRETE USED TO REPAIR SIDEWALK SHALL BE TINTED MATCH THE EXISTING SIDEWALK CONCRETE COLOR. COLOR SAMPLES SHALL BE SUBMITED TO THE ENGINEER BEFORE WORK IS STARTED. CONCRETE TINT SHALL BE INCLUDED IN OTHER ITEMS BID ON.

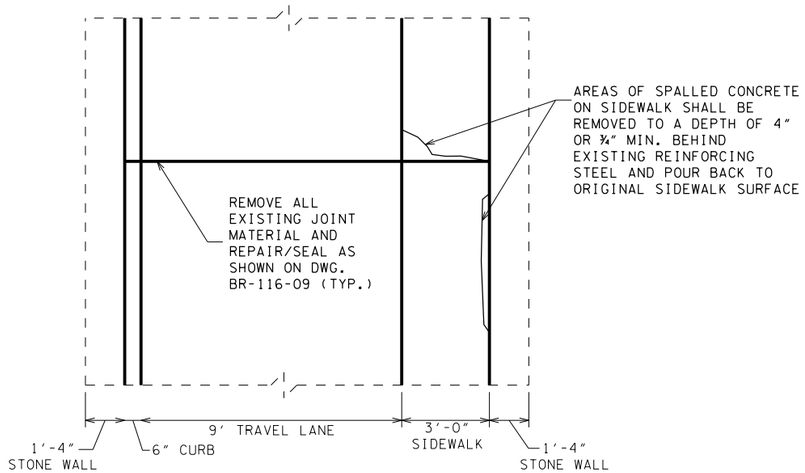

PARTIAL PLAN VIEW OF DECK REPAIRS

NOTE: LONGITUDINAL JOINT REPAIRS SHALL BE PAID FOR UNDER ITEM 604-10.73, LONGITUDINAL BRIDGE JOINT REPAIR, L.F.

NOTE: TRANSVERSE JOINT REPAIRS SHALL BE PAID FOR UNDER ITEM 604-10.16, EXPANSION JOINT REPAIRS, L.F.

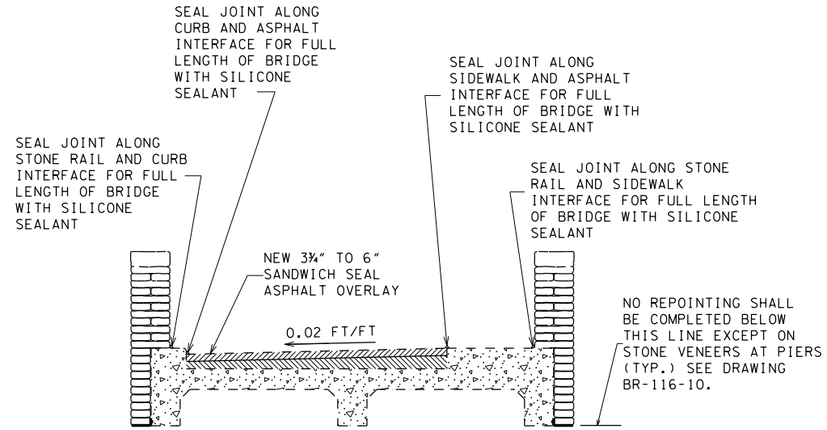

TYPICAL DECK CROSS SECTION

SHOWING AREAS IN GENERAL OF JOINTS THAT NEED TO BE SEALED

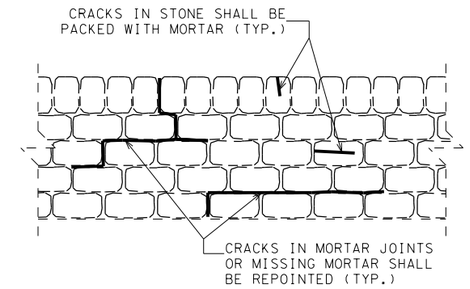

TYPICAL STONE BRIDGE RAIL REPAIR

SHOWING AREAS IN GENERAL OF CRACKS IN THE STONE RAIL TO BE REPOINTED

NOTE: CONTRACTOR SHALL REMOVE EXISTING CONCRETE MORTAR IN THE CRACKED AREAS AND REPLACE WITH MORTAR. THE COLOR OF AND GRADATION OF AGGREGATE IN THE NEW MORTAR IN THE REPOINTED AREAS SHALL MATCH AS CLOSE AS POSSIBLE TO THE COLOR OF THE EXISTING CONCRETE MORTAR. THE CONTRACTOR MAY OBTAIN A LIST OF ACCEPTABLE BRANDS OF MORTAR FROM THE TENNESSEE DEPARTMENT OF TRANSPORTATION, DIVISION OF MATERIALS AND TEST.

NOTE: ALL CRACKS IN MORTAR/STONE DESIGNATED FOR REPAIR BY THE ENGINEER SHALL BE CLEANED OF EFFLORESCENCE BEFORE REPOINTING. CLEANING OF JOINTS/CRACKS SHALL BE PAID FOR UNDER ITEM 612-06.01 REPOINTING OF STONE MASONRY JOINTS, L.F.

NOTE: COST OF REMOVING THE EXISTING DETERIORATED MORTAR IN THE REPOINTING AREAS SHALL BE PAID FOR UNDER ITEM NO. 612-06.01, REPOINTING OF STONE MASONRY JOINTS, L.F.

NOTE: APPROXIMATELY 1,600 LINEAR FEET OF REPOINTING WILL BE DESIGNATED BY THE ENGINEER.

NOTE: ALL STONES THAT ARE DAMAGED SHALL BE REMOVED AND REPLACED WITH STONES THAT ARE LIMESTONE AND THAT ARE SIMILAR IN SIZE, SHAPE, AND COLOR TO EXISTING STONES IN THE DAM.

NOTE: THE ENGINEER WILL FIELD LOCATE ALL CRACKS THAT WILL BE REPOINTED. THE QUANTITY OF REPOINTING, ITEM NO. 612-06.01, L.F., MAY BE INCREASED OF DECREASED, AS DIRECTED BY THE ENGINEER. ALL REPOINTING MUST BE COMPLETED TO THE FULL SATISFACTION OF THE ENGINEER.

NOTE: SEE MASONRY REPAIR NOTES ON DRAWING BR-116-10.

LONGITUDINAL JOINT REPAIRS

SPAN	604-10.73 LONGITUDINAL BRIDGE JOINT REPAIR L.F.
1	41.0
2	52.0
3	52.0
4	52.0
5	52.0
6	86.0
7	86.0
8	52.0
9	52.0
10	52.0
11	52.0
12	52.0
13	52.0
14	52.0
15	52.0
16	52.0
17	52.0
18	52.0
19	52.0
20	52.0
21	52.0
22	52.0
23	52.0
24	70.0
TOTAL	1,323

ESTIMATED CONCRETE SIDEWALK REPAIRS

SPAN	604-10.54 CONCRETE REPAIR S.F.
1	-
2	-
3	-
4	-
5	-
6	-
7	-
8	1.0
9	-
10	-
11	2.0
12	-
13	-
14	-
15	4.0
16	2.0
17	6.0
18	-
19	2.0
20	-
21	1.0
22	-
23	-
24	-
TOTAL	18.0

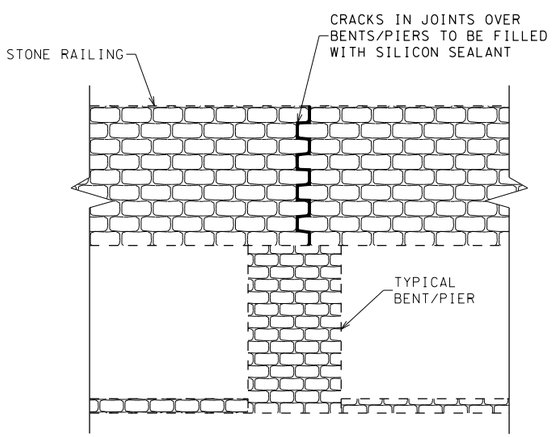

TYPICAL ELEVATION VIEW

SHOWING AREAS IN GENERAL OF JOINTS IN STONE RAILING ABOVE PIERS OR BENTS

CRACKS TO BE FILLED

PIER OR BENT	CRACK TO BE FILLED WITH SILICONE SEALANT L.F.
PIER 1	20.0
PIER 3	20.0
PIER 5	20.0
PIER 8	20.0
PIER 11	20.0
PIER 13	20.0
BENT 7	20.0
TOTAL	140.0

NOTE: THE COST TO FILL CRACKS ABOVE PIERS AND BENTS WITH SILICONE SEALANT SHALL BE PAID FOR UNDER ITEM NO. 612-06.01, REPOINTING OF STONE MASONRY JOINTS, LF.

NOTE: SILICON SEALANT SHALL CLOSELY MATCH EXISTING STONE AND MORTAR COLOR.

NOTE: THE CRACK IN THE STONE RAILING ON THE NORTH AND SOUTH SIDES OF THE BRIDGE SHALL BE FILLED WITH SILICON SEALANT ON BOTH THE INNER AND OUTER FACES OF THE RAILING.

UNOFFICIAL SET

NOT FOR BIDDING

BRADLEY E. BIVENS
REGISTERED ENGINEER
AGRICULTURE
COMMERCE
No. 21539
STATE OF TENNESSEE

STATE OF TENNESSEE
DEPARTMENT OF TRANSPORTATION

SUPERSTRUCTURE REPAIR DETAILS (2 OF 3)

BRIDGE NO. 67-SR136-14.30
STATE ROUTE 136
(STANDING STONE PARK HIGHWAY)
OVER MILL CREEK (PARK LAKE)
OVERTON COUNTY
2014

DESIGNED BY	MRP	DATE	10/2013
DRAWN BY	MRP	DATE	10/2013
SUPERVISED BY	BEB	DATE	10/2013
CHECKED BY	RMD	DATE	10/2013

PROJECT NO.	YEAR	SHEET NO.
67008-4243-04	2014	

REVISIONS

NO.	DATE	BY	BRIEF DESCRIPTION

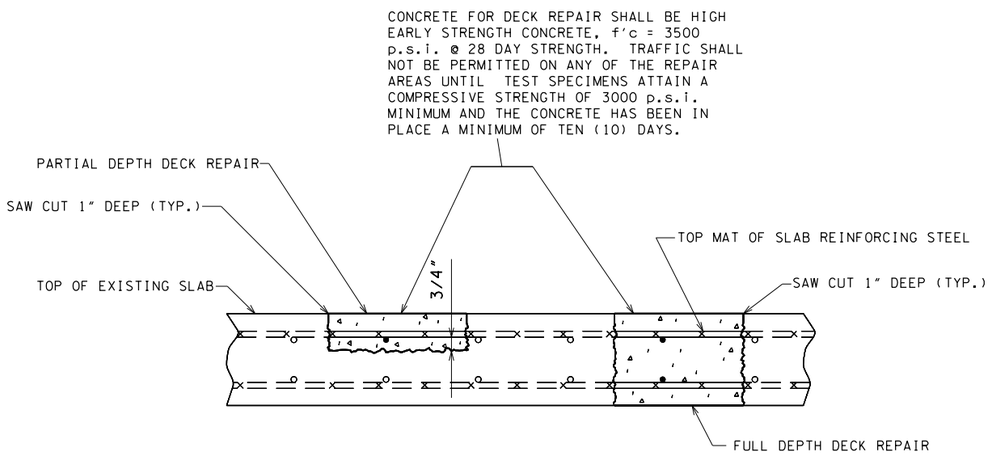

DETAIL SHOWING FULL AND PARTIAL DEPTH DECK REPAIR

NOTES:

1. REMOVE CONCRETE IN ALL DELAMINATED AREAS TO A DEPTH OF ¾" BELOW THE TOP BAR OF THE TOP MAT OF REINFORCING STEEL. ALL REINFORCING STEEL IN AREAS OF DECK REPAIR SHALL BE COMPLETELY CLEANED. AREAS OF CONCRETE REMOVAL SHALL BE DESIGNATED BY PERSONNEL FROM THE HEADQUARTERS, BRIDGE INSPECTION AND REPAIR OFFICE. INSPECTIONS TO DETERMINE AREAS OF DECK REPAIR SHALL BE SCHEDULED WITH THE BRIDGE REPAIR OFFICE AT LEAST THREE (3) DAYS IN ADVANCE.

2. DECK REPAIR WILL BE PAID FOR UNDER ITEM NO. 604-10.50, BRIDGE DECK REPAIR (PARTIAL DEPTH OF SLAB), S.Y. AND ITEM NO. 604-10.30, BRIDGE DECK REPAIR (FULL DEPTH OF SLAB), S.Y. DURING PARTIAL DEPTH REPAIRS, SHOULD DETERIORATED CONCRETE BE ENCOUNTERED WHICH APPEARS TO RUN FULL DEPTH IN THE SLAB, THE ENGINEER MAY DESIGNATE THESE AREAS TO BE REPAIRED UNDER ITEM NO. 604-10.30.

3. POWER DRIVEN HAND TOOLS USED FOR THE REMOVAL OF UNSOUND CONCRETE IN MAKING PARTIAL AND FULL DEPTH REPAIRS ARE SUBJECT TO THE FOLLOWING RESTRICTIONS: 1) PARTIAL DEPTH REPAIRS; PNEUMATIC HAMMERS HEAVIER THAN NOMINAL 60 LBS CLASS SHALL NOT BE USED. 2) FULL DEPTH REPAIRS; PNEUMATIC HAMMERS HEAVIER THAN NOMINAL 90 LBS CLASS SHALL NOT BE USED. ALSO ALL DECK REPAIR OVER BEAMS WILL BE RESTRICTED TO 60 LBS PNEUMATIC HAMMERS. 3) CHIPPING HAMMERS OF THE 15 LB CLASS SHALL BE USED TO REMOVE CONCRETE FROM BENEATH ANY REINFORCING STEEL.

4. CARE SHALL BE TAKEN WHEN REMOVING ANY AREAS OF SLAB NEAR THE 1" SAW CUT LINE. A 1" MIN. VERTICAL DEPTH SAW CUT LINE IS REQUIRED AROUND THE FULL PERIMETER OF PATCH PRIOR TO PLACEMENT OF CONCRETE.

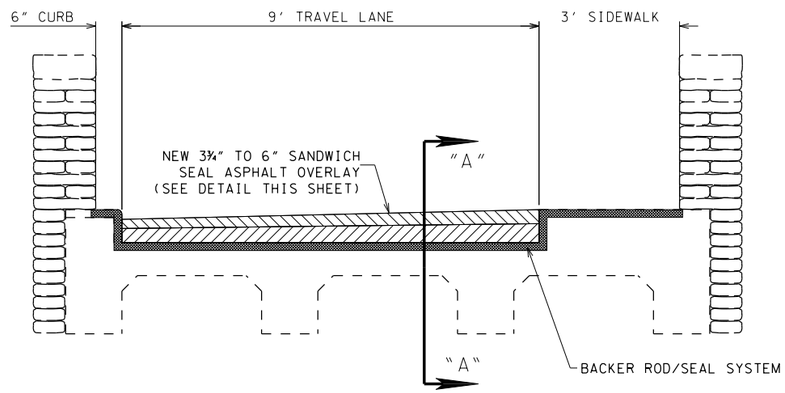

SEALANT DETAIL AT JOINTS

(SHOWING LIMITS AT SIDEWALK/CURB)

NOTES: ALL EXISTING TRANSVERSE JOINTS ON BRIDGE SHALL BE REPAIRED/RESEALED.

EXISTING JOINTS SHALL BE COMPLETELY CLEANED OF EXISTING JOINT MATERIALS BEFORE BACKER RODS AND SEAL SYSTEMS ARE PLACED.

THE COSTS OF CLEANING TRANSVERSE JOINTS AND PLACING THE BACKER ROD AND SEAL SYSTEM ARE TO BE INCLUDED IN THE COST OF ITEM NO. 604-10.16, EXPANSION JOINT REPAIRS, LF.

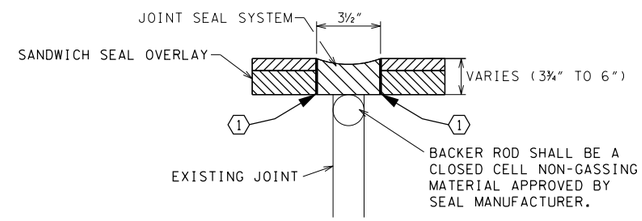

THE JOINT SEAL SYSTEM USED SHALL BE ON THE TDOT APPROVED QUALIFIED LISTS FOR ACCEPTABLE PRODUCTS. THE JOINT SYSTEM SHALL BE INSTALLED UNDER THE DIRECT SUPERVISION OF AN AUTHORIZED TECHNICIAN PROVIDED BY THE SEAL SUPPLIER. THE TECHNICIAN MUST APPROVE THE CLEANING OF THE JOINT AND THE PLACEMENT OF THE BACKER ROD. THE COST OF THE JOINT SEAL SYSTEM IS TO BE INCLUDED IN ITEM NO. 604-10.16 EXPANSION JOINT REPAIRS, LF.

PART SECTION "A"-"A"

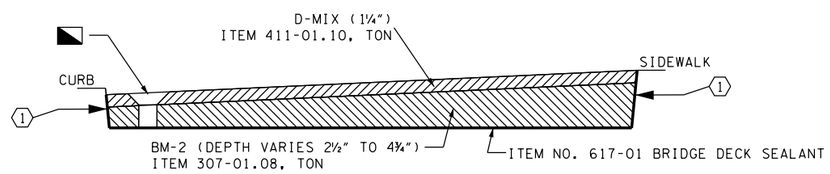

1 MASTIC AS RECOMMENDED BY MANUFACTURER OF MEMBRANE. SEE STANDARD SPECIFICATIONS SECTION 906.04.

CONTRACTOR SHALL TAPER ASPHALT AROUND EXISTING DECK DRAIN OPENINGS

NOTE: EXISTING ASPHALT DEPTH VARIES FROM 3¾" (CURB SIDE) TO 6" (SIDEWALK SIDE) THE ENTIRES DEPTH OF EXISTING ASPHALT SHALL BE REMOVED AND NEW BRIDGE DECK SEAL AND SANDWICH SEAL ASPHALT OVERLAY SHALL BE INSTALL TO THE SAME DEPTHS / CROSS SLOPE.

BRIDGE DECK SEALANT DETAIL

UNOFFICIAL SET

NOT FOR BIDDING

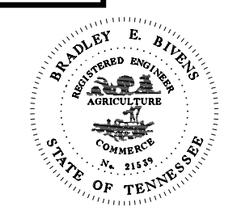

STATE OF TENNESSEE
DEPARTMENT OF TRANSPORTATION

SUPERSTRUCTURE REPAIR DETAILS (3 OF 3)

BRIDGE NO. 67-SR136-14.30
STATE ROUTE 136
(STANDING STONE PARK HIGHWAY)
OVER MILL CREEK (PARK LAKE)
OVERTON COUNTY
2014

DESIGNED BY	MRP	DATE	10/2013
DRAWN BY	MRP	DATE	10/2013
SUPERVISED BY	BEB	DATE	10/2013
CHECKED BY	RMD	DATE	10/2013

BR-116-09

PROJECT NO.	YEAR	SHEET NO.
67008-4243-04	2014	

REVISIONS

NO.	DATE	BY	BRIEF DESCRIPTION

LEGEND

AREAS OF EXPOSED REINFORCING BARS

AREAS OF CONCRETE REPAIR TO RECEIVE QUICK SET PATCHING MATERIAL AND/OR HIGH EARLY STRENGTH CONCRETE

TYPICAL CRACK TO RECEIVE EPOXY INJECTION

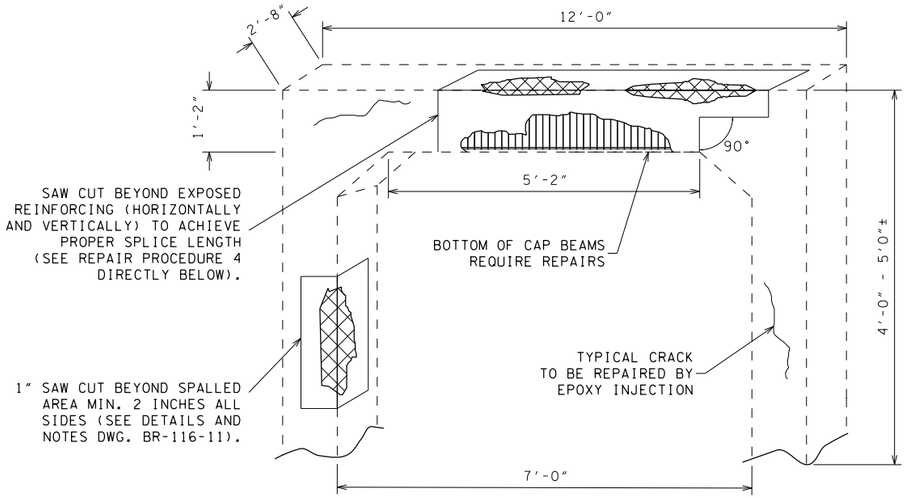

ELEVATION OF TYPICAL EXISTING BENTS

(BENTS 1 THROUGH 4 ON WEST END)
(BENTS 5 THROUGH 10 ON EAST END)
(LOCATED INSIDE CLOSED BAYS OF BRIDGE)
NO SCALE

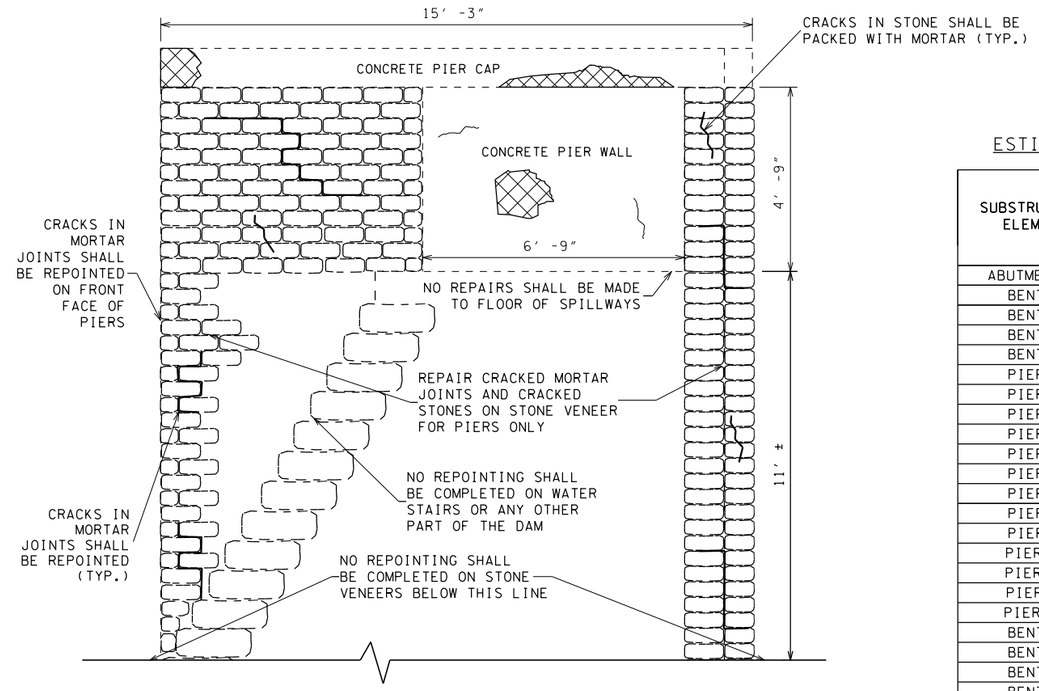

ELEVATION OF TYPICAL EXISTING PIERS

(PIERS 1 THROUGH 3 AT MAIN SPILLWAYS)
(PIERS 4 THROUGH 13 AT SECONDARY SPILLWAYS)
NO SCALE

ESTIMATED CONCRETE SUBSTRUCTURE REPAIRS

SUBSTRUCTURE ELEMENT	604-10.54 CONCRETE REPAIR S.F.	604-10.62 EPOXY INJECTION L.F.	604-10.43 PENETRATING WATER REPELLENT CONC. SEALER S.Y.
ABUTMENT 1	2.0	-	-
BENT 1	49.0	-	3.5
BENT 2	40.0	-	3.5
BENT 3	17.0	-	3.5
BENT 4	15.0	-	3.5
PIER 1	-	-	3.5
PIER 2	7.0	-	3.5
PIER 3	15.0	2.0	3.5
PIER 4	3.0	1.0	3.5
PIER 5	16.0	-	3.5
PIER 6	6.0	-	3.5
PIER 7	6.0	2.0	3.5
PIER 8	25.0	3.0	3.5
PIER 9	20.0	1.0	3.5
PIER 10	3.0	-	3.5
PIER 11	-	-	3.5
PIER 12	-	2.0	3.5
PIER 13	-	1.0	3.5
BENT 5	32.0	-	3.5
BENT 6	46.0	-	3.5
BENT 7	11.0	3.0	3.5
BENT 8	45.0	-	3.5
BENT 9	36.0	-	3.5
BENT 10	5.0	12.0	3.5
ABUTMENT 2	-	-	-
TOTAL	399.0	27.0	80.5

PROCEDURE FOR CONCRETE REPAIRS DEEPER THAN 3 INCHES:

1. SAW CUT RECTANGULAR AREA (ONE INCH DEEP) FOR LENGTH (HORIZONTALLY AND VERTICALLY) AS NEEDED TO OBTAIN MINIMUN SPLICE LENGTH SHOWN IN NOTE 3.
2. CLEAN & PAINT EXISTING REINFORCING STEEL WITH EPOXY MASTIC PAINT PRIOR TO PERFORMING SPLICE REPAIRS.
3. SPLICE NEW IN-KIND REINFORCING STEEL AS DIRECTED BY ENGINEER.
4. IF A PORTION OF EXISTING BAR HAS EXCESSIVE LOSE OF SECTION, A NEW BAR SHALL BE SPLICED TO THE EXISTING BAR WITH THE FOLLOWING DIMENSIONS:
   FOR #9 BAR, MINIMUM SPLICE LENGTH OF 44 INCHES.
   FOR #5 BAR, MINIMUM SPLICE LENGTH OF 15 INCHES.
4. POUR BACK TO ORIGINAL LINES WITH HIGH EARLY STRENGTH CONCRETE ACCORDING TO DETAILS ON SHEET BR-116-11 AND MANUFACTURER'S SPECIFICATIONS.

GENERAL CONCRETE REPAIR NOTES:

1. CONCRETE REPAIR AREAS SHALL BE LOCATED BY THE ENGINEER.
2. REPAIR AREAS OF SPALLED OR DELAMINATED CONCRETE ON PIERS AND ABUTMENTS WITH QUICK SET PATCHING MATERIAL AND/OR HIGH EARLY STRENGTH CONCRETE.
3. THE AREAS TO BE REPAIRED SHALL BE LARGER THAN THE SPALLED AREAS TO ENSURE THAT PATCHES EXTEND INTO SOUND CONCRETE.
4. UNSOUND CONCRETE SHALL BE REMOVED TO A MINIMUM DEPTH OF ¾" BEHIND EXISTING REINFORCEMENT.
5. COST OF REMOVING ALL UNSOUND AND DETERIORATED CONCRETE, PLACING OF NEW CONCRETE, AND ALL LABOR AND MATERIALS NECESSARY FOR COMPLETING THE WORK SHALL BE PAID FOR UNDER ITEM NO. 604-10.54, CONCRETE REPAIR, S.F.
6. CONTRACTOR SHALL BE RESPONSIBLE FOR THE STABILITY OF THE STRUCTURE DURING REPAIRS, INCLUDING TEMPORARY SHORING WHEN FULL BOTTOM OF CAP IS REQUIRED TO BE REPAIRED. COST OF SHORING TO BE INCLUDED IN OTHER ITEMS BID ON.
7. SEE DRAWING BR-116-11 FOR MORE DETAILS OF SPALLED CONCRETE REPAIR.
8. SEE DRAWING BR-116-11 FOR EPOXY INJECTION NOTES.
9. PENETRATING WATER REPELLENT SEALER SHALL BE APPLIED TO THE TOP OF ALL PIER/BENT CAPS.

MASONRY REPAIR NOTES:

1. CONTRACTOR SHALL REMOVE ALL EFFLORESCENCE AND ORGANIC MATERIALS FROM AROUND MORTAR JOINTS/CRACKS TO BE REPAIRED USING HAND TOOLS, INCLUDING NON-METALLIC BRUSHES AND SCRAPERS. CLEANING OF JOINTS/CRACKS SHALL BE PAID FOR UNDER ITEM 612-06.01 REPOINTING OF STONE MASONRY JOINTS, L.F.
2. CONTRACTOR SHALL REMOVE ALL LOOSE AND UNSOUND MORTAR AND DEBRIS. RAKE OUT ADHERING MORTAR TO A DEPTH EQUAL TO ONE AND ONE-HALF TIMES THE AVERAGE WIDTH OF JOINTS, BUT IN NO CASE LESS THAN ONE INCH. MORTAR SHALL BE CLEANED OUT TO A UNIFORM DEPTH LEAVING SQUARE CORNERS AT BACK OF CUT. REPOINTING SHALL NOT BE DONE WHEN THE AMBIENT TEMPERATURE IS 40 DEGREES FARENHEIT OR BELOW OR WHEN THE MASONRY CONTAINS FROST.
3. RAKED JOINTS AND MASONRY CRACKS SHALL BE FREE OF ANY LOOSE PARTICLES, DUST AND DEBRIS.
4. REPOINT STONE MASONRY AND PATCH ALL MASONRY CRACKS USING TYPE "N" MASONRY MORTAR. MATCH AGGREGATE GRADATION, COLOR, AND DEPTH OF REVEAL OF ORIGINAL MORTAR TO THE MAXIMUM EXTENT PRACTICABLE.
6. CRACK REPAIR SHALL BE PERFORMED IN TWO OPERATIONS:
   A. FIRST, FILL TO WITHIN 1" OF THE SURFACE OF THE CRACK.
   B. SECOND, FILL TO WITHIN 1/2" OF THE SURFACE OF THE CRACK.
7. MASONRY WORK SHALL BE PAID FOR UNDER THE FOLLOWING ITEMS:
   1. ITEM 612-06.01, REPOINTING OF STONE MASONRY JOINTS, L.F.
   2. ALL MASONRY CRACK REPAIRS AND CLEANING OF MASONRY JOINTS SHALL BE PAID FOR UNDER ITEM 612-06.01, L.F.
   3. ALL STONE CRACKS TO BE PACKED WITH MORTAR AND TO BE PAID FOR UNDER ITEM NO. 612-06.01, L.F.
8. THE ENGINEER WILL FIELD LOCATE ALL CRACKS THAT WILL BE REPOINTED. THE QUANTITY OF REPOINTING (APPROX. 1,600 L.F.), ITEM NO. 612-06.01, MAY BE INCREASED OF DECREASED AS DIRECTED BY THE ENGINEER. ALL REPOINTING MUST BE COMPLETED TO THE FULL SATISFACTION OF THE ENGINEER.
9. ALL STONES THAT ARE DAMAGED SHALL BE REMOVED AND REPLACED WITH A STONE THAT IS LIMESTONE AND THAT IS SIMILAR IN SIZE, SHAPE, AND COLOR TO EXISTING STONES IN THE DAM.
10. SEE GENERAL NOTES FOR ENVIRONMENTAL CONTAINMENT OF REMOVED MATERIAL.

UNOFFICIAL SET

NOT FOR BIDDING

BRADLEY E. BIVENS
REGISTERED ENGINEER
AGRICULTURE
COMMERCE
No. 21539
STATE OF TENNESSEE

STATE OF TENNESSEE
DEPARTMENT OF TRANSPORTATION

SUBSTRUCTURE
REPAIR DETAILS

BRIDGE NO. 67-SR136-14.30
STATE ROUTE 136
(STANDING STONE PARK HIGHWAY)
OVER MILL CREEK (PARK LAKE)
OVERTON COUNTY
2014

DESIGNED BY	MRP	DATE	10/13
DRAWN BY	MRP	DATE	10/13
SUPERVISED BY	BEB	DATE	10/13
CHECKED BY	RMD	DATE	10/13

BR-116-10

PROJECT NO.	YEAR	SHEET NO.
67008-4243-04	2014	

REVISIONS

NO.	DATE	BY	BRIEF DESCRIPTION

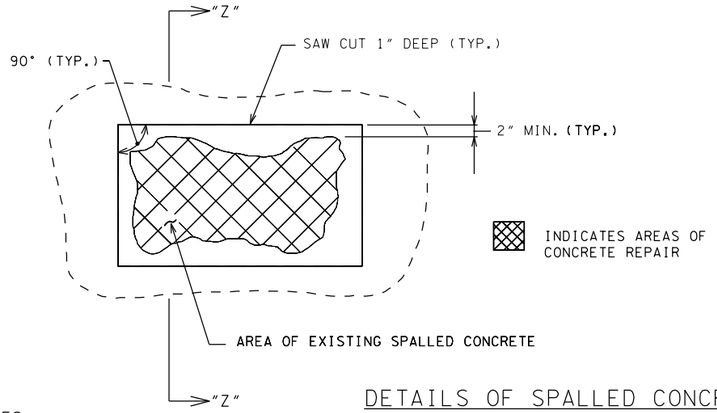

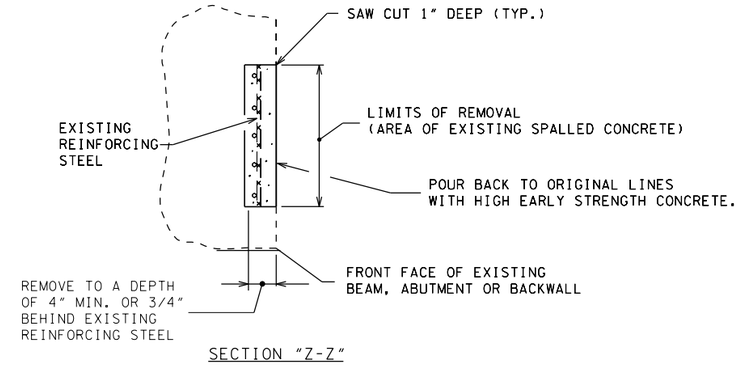

SECTION "Z-Z"

DETAILS OF SPALLED CONCRETE SURFACE AND REPAIR

NOTES:

EXTREME CARE SHALL BE TAKEN WHEN REMOVING THE DETERIORATED CONCRETE SO AS NOT TO DAMAGE THE EXISTING REINFORCING STEEL. ALL EXPOSED REINFORCING SHALL BE COMPLETELY CLEANED TO THE SATISFACTION OF THE ENGINEER BEFORE REPOURING.

FOR CONCRETE NOTE, SEE GENERAL NOTES ON DRAWING BR-116-10.

LIMITS AND LOCATION OF REPAIRS TO BE DESIGNATED BY THE ENGINEER. ALL UNSOUND CONCRETE IN THESE AREAS SHALL BE REMOVED AND REPOURED WITH PATCHING MATERIAL. THE MINIMUM DEPTH OF REPAIR SHALL BE 4 INCHES. DEPTH MAY BE INCREASED TO EXTEND INTO SOUND CONCRETE AS DIRECTED BY THE ENGINEER. EDGES OF THE REPAIR AREAS SHALL HAVE A MINIMUM 1 INCH SAW CUT PERPENDICULAR TO THE FACE OF THE CONCRETE.

PATCHING MATERIAL FOR REPAIRS LESS THAN 3 INCHES DEEP SHALL BE POLYMER MODIFIED CEMENTITIOUS STRUCTURAL PATCHING MATERIAL FROM THE TENNESSEE DEPARTMENT OF TRANSPORTATION QUALIFIED PRODUCTS LIST 13, SECTION B.6. PATCHING MATERIAL FOR REPAIRS DEEPER THAN 3 INCHES SHALL BE RAPID SET HIGH EARLY STRENGTH CEMENTITIOUS PATCHING MATERIAL. PATCHING MATERIALS SHALL BE FROM THE TENNESSEE DEPARTMENT OF TRANSPORTATION QUALIFIED PRODUCTS LIST 13, SECTION B.1.

SAW CUT EXISTING CONCRETE SURFACES SO AS TO OBTAIN SQUARED CORNERS.

NOTES:

POWER DRIVEN HAND TOOLS USED FOR THE REMOVAL OF UNSOUND CONCRETE ARE SUBJECT TO THE FOLLOWING RESTRICTIONS.

1) PNEUMATIC HAMMERS HEAVIER THAN A 35 LB. CLASS SHALL NOT BE USED.
2) CHIPPING HAMMERS OF THE 15 LB. CLASS SHALL BE USED TO REMOVE CONCRETE FROM BEHIND THE REINFORCING STEEL.

THE CONTRACTOR SHALL BE RESPONSIBLE FOR THE STABILITY OF THE STRUCTURE DURING REPAIRS. DETAILS OF ANY TEMPORARY SUPPORT SYSTEM (IF REQUIRED) SHALL BE SUBMITTED TO THE ENGINEER FOR REVIEW AND SHALL MEET WITH THE FULL SATISFACTION OF THE ENGINEER BEFORE REPAIRS HAVE BEGUN. COST TO BE INCLUDED IN ITEMS BID ON.

COST OF REMOVING DETERIORATED CONCRETE, CLEANING EXISTING REINFORCING STEEL, FORMING, PATCHING MATERIAL AND ALL ADDITIONAL MATERIALS AND LABOR NECESSARY TO COMPLETE REPAIRS SHOWN IN THIS DETAIL TO BE INCLUDED UNDER ITEM NO. 604-10.54, CONCRETE REPAIRS, S.F. OR ITEM NO. 604-10.05, CONCRETE REPAIRS, S.F.

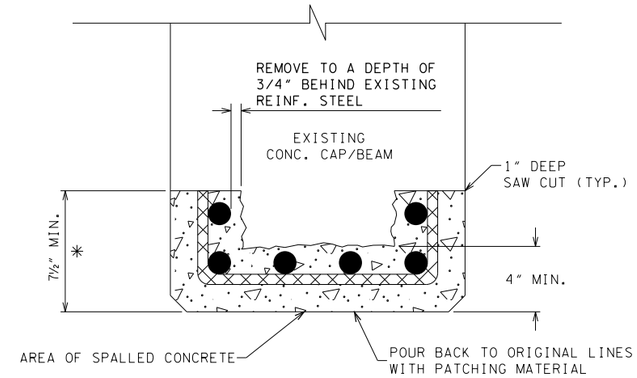

* DENOTES: LIMIT AND LOCATIONS OF REPAIR TO BE DESIGNATED BY THE ENGINEER.

NOTE: TEMPORARY SHORING MAY BE REQUIRED WHEN FULL BOTTOM IS TO BE REPAIRED. COST OF SHORING TO BE INCLUDED IN OTHER ITEMS BID ON.

TYPICAL BEAM AND/OR BENT CAP REPAIR

NOTES FOR EPOXY INJECTION:

UNLESS OTHERWISE NOTED, THE INTENT OF THIS SPECIFICATION IS FOR DESIGNATED CRACKS TO BE INJECTED THEIR FULL LENGTH AND DEPTH.

DESIGNATED CRACKS SHALL BE INJECTED WITH AN APPROVED EPOXY RESIN ADHESIVE FILLING ALL VOIDS FOR THE CRACK DEPTH OR THICKNESS OF THE MEMBER. THE EPOXY RESIN ADHESIVE SHALL BE ON THE CURRENT QUALIFIED PRODUCTS LIST MAINTAINED BY THE DIVISION OF MATERIALS AND TEST. ALL CRACKS SHALL BE INJECTED USING AN ADHESIVE SUITABLE FOR THE FIELD CONDITIONS (CRACK WIDTH, TEMPERATURE, HUMIDITY, ETC.) RECOMMENDED BY THE ADHESIVE MANUFACTURER AS SHOWN ON MATERIAL DATA SHEETS. FOLLOWING INJECTION, ALL INJECTION PORTS AND CAPPING MATERIAL SHALL BE REMOVED FROM EXPOSED SURFACES LEAVING THE SURFACE SMOOTH AND FLUSH WITH THE SURROUNDING CONCRETE SURFACES.

THE CONTRACTOR SHALL HAVE SUFFICIENT EXPERIENCE AND TRAINING TO PERFORM THE EPOXY INJECTION IN ACCORDANCE WITH THESE PLANS. PRIOR TO PERFORMING ANY WORK, THE CONTRACTOR SHALL SUBMIT TO THE ENGINEER A WRITTEN PROCEDURE FOR PERFORMING THE EPOXY INJECTION. THE PROCEDURE SHALL DESCRIBE IN DETAIL HOW THE WORK WILL BE PERFORMED. THE PROCEDURE SHALL INCLUDE, BUT NOT BE LIMITED TO THE FOLLOWING INFORMATION.

1) DESCRIPTION OF EQUIPMENT
   A. THE INJECTION EQUIPMENT SHALL BE OF THE TYPE THAT MIXES ADHESIVE COMPONENTS AT THE INJECTION HEAD.
   B. THE INJECTION EQUIPMENT SHALL BE CAPABLE OF DISCHARGING MIXED ADHESIVE AT ANY PRESSURE UP TO 300 PSI. THE INJECTION EQUIPMENT SHALL BE EQUIPPED WITH GAUGES WHICH CAN MEASURE THE INJECTION PRESSURE AND VOLUME.
2) EQUIPMENT CALIBRATION PROCEDURES AND SCHEDULE.
3) MATERIALS TO BE USED (INCLUDING MANUFACTURER DATA SHEETS).
   A. CAPPING MATERIAL
   B. EPOXY ADHESIVE (TYPE TO BE APPROPRIATE FOR CRACK SIZES TO BE INJECTED).
4) PORT SPACING
   A. PORT SPACING SHALL NOT BE LESS THAN THE THICKNESS OF THE CONCRETE IN THAT LOCATION.
5) INJECTION SEQUENCE
   A. INJECTION SHALL PROCEED FROM LOWER END OF CRACK ALONG ADJACENT PARTS.
   B. SKIPPING OF PORTS DURING INJECTION SHALL NOT BE ALLOWED.

THE CONTRACTOR SHALL HAVE THE MANUFACTURER'S INSTRUCTIONS FOR PROPORTIONING AND MIXING AVAILABLE AT THE JOB SITE AT ALL TIMES AND SHALL ENSURE THAT THE EQUIPMENT IS SUPPLYING THE MIXED ADHESIVE IN THE CORRECT PROPORTIONS.

TO ENSURE PROPER MIXING AND PROPORTIONING, SAMPLES SHALL BE TAKEN FROM THE INJECTOR HEAD. SAMPLES SHALL BE TAKEN AT THE START OF EACH WORKDAY AND EACH TIME THE ADHESIVE RESERVOIRS ARE REFILLED. THE SAMPLES SHALL BE IN A TEST CUP. THE SAMPLE SHALL BE MONITORED TO ENSURE THAT THE CURE TIME IS IN COMPLIANCE WITH THE MANUFACTURER'S DATA SHEET. IF THE SAMPLES DO NOT CURE IN THE SPECIFIED TIME THEN THE EQUIPMENT USED TO PRODUCE THE SAMPLE SHALL NOT BE USED UNTIL THE PROBLEM IS CORRECTED.

CORE SAMPLES SHALL BE TAKEN AS VERIFICATION OF THE QUALITY OF WORK. THE CONTRACTOR SHALL TAKE ONE (1) ONE (1) INCH DIAMETER (FULL DEPTH OF CONCRETE AT LOCATION CORED) CORE SAMPLE STARTING WITH THE FIRST REPAIR LOCATION THEN EVERY 3RD REPAIR LOCATION AFTERWARDS. WORK SHALL NOT PROCEED UNTIL THE CORE SAMPLE IS TAKEN AND ACCEPTED. ALL CORE SAMPLES AND HOLES SHALL BE INDEXED FOR FUTURE REFERENCE. THE ENGINEER SHALL DESIGNATE ALL LOCATIONS TO BE CORED. IF ANY CORES SHOW UNACCEPTABLE RESULTS, ALL WORK SHALL BE STOPPED UNTIL THE CONTRACTOR SUBMITS A PROPOSAL FOR CORRECTING UNACCEPTABLE WORK.

THE INITIAL CORE WILL ALSO SERVE TO QUALIFY THE FOREMAN OF THIS WORK. IF AT ANY TIME A NEW FOREMAN IS USED, HE SHALL BE QUALIFIED WITH A CORE SAMPLE.

THE CONTRACTOR, AT HIS EXPENSE, SHALL REPAIR ALL CORE HOLES WITH AN APPROVED CEMENTITIOUS PATCHING MATERIAL.

CORE SAMPLES SHALL BE VISUALLY INSPECTED TO CONFIRM THAT CRACKS ARE COMPLETELY FILLED WITH ADHESIVE. ANY CORE HAVING LESS THAN 95% OF THE CRACK FILLED WITH ADHESIVE SHALL BE CONSIDERED UNACCEPTABLE AND BE REJECTED.

CORE SAMPLES SHALL BE TESTED FOR BOND STRENGTH. SAMPLES MAY BE FRACTURED BY HAMMER BLOW TO CRACK AREA OR THROWN AT A HARD SURFACE. IF ADHESIVE FAILURE OCCURS BEFORE CONCRETE FAILURE, THE CORE SHALL BE CONSIDERED UNACCEPTABLE AND REJECTED.

PAYMENT FOR EPOXY INJECTION CRACK REPAIR SHALL BE MADE UNDER ITEM NUMBERS 604-10.62, EPOXY INJECTION REPAIR (COMPLETE AND IN PLACE), LF AND 604-10.58, EPOXY INJECTION (INJECTION), GAL

PRICE BID FOR ITEM NUMBER 604-10.62, EPOXY INJECTION REPAIR (COMPLETE AND IN PLACE), LF, SHALL INCLUDE COST OF ALL LABOR AND MATERIALS (EXCEPT ADHESIVE) FOR GRINDING AND FOR SURFACE PREPARATION, CRACK PREPARATION, CAPPING, INJECTION OF ADHESIVE, ALL SAMPLING AND TESTING, REMOVAL OF CAPPING MATERIAL AND PORTS, AND OTHER INCIDENTALS. CRACKS SHALL BE MEASURED FOR PAYMENT ALONG THE LENGTH OF THE VISIBLE SURFACE CRACK.

PRICE BID FOR ITEM NUMBER 604-10.58, EPOXY INJECTION (INJECTION), GAL, SHALL INCLUDE COST FOR ADHESIVE MATERIAL INJECTED ONLY.

NO PAYMENT SHALL BE MADE FOR REWORK DEEMED NECESSARY BY FAILURE OF ADHESIVE SAMPLES OR CORE SAMPLES.

ALL WORK INCLUDING SAMPLING AND TESTING SHALL BE IN THE PRESENCE OF THE ENGINEER OR HIS REPRESENTATIVE OR CONTRACT INSPECTORS. ANY WORK DONE WITHOUT INSPECTORS PRESENT SHALL NOT BE PAID FOR. THE CONTRACTOR SHALL PROVIDE THE ENGINEER WITH WEEKLY SCHEDULES OF WORK TO BE PERFORMED. SCHEDULES SHALL BE SUBMITTED AT LEAST THREE (3) DAYS IN ADVANCE OF WORK TO BE DONE. THE ENGINEER SHALL BE NOTIFIED OF ANY CHANGE IN THE SCHEDULE A MINIMUM OF TWENTY-FOUR (24) HOURS IN ADVANCE OF CHANGE.

SEE BR-116-10 FOR TABLE OF ESTIMATED CRACKS TO RECEIVE EPOXY FOR ALL SUBSTRUCTURES.

UNOFFICIAL SET

NOT FOR BIDDING

STATE OF TENNESSEE
DEPARTMENT OF TRANSPORTATION

BRIDGE REPAIR DETAILS

BRIDGE NO. 67-SR136-14.30
STATE ROUTE 136
(STANDING STONE PARK HIGHWAY)
OVER
MILL CREEK (PARK LAKE)
OVERTON COUNTY
2014

DESIGNED BY	MRP	DATE	2013
DRAWN BY	MRP	DATE	2013
SUPERVISED BY	BEB	DATE	2013
CHECKED BY	RMD	DATE	2013

BR-116-11

PROJECT NO.	YEAR	SHEET NO.
67008-4243-04	2014	

REVISIONS

NO.	DATE	BY	BRIEF DESCRIPTION

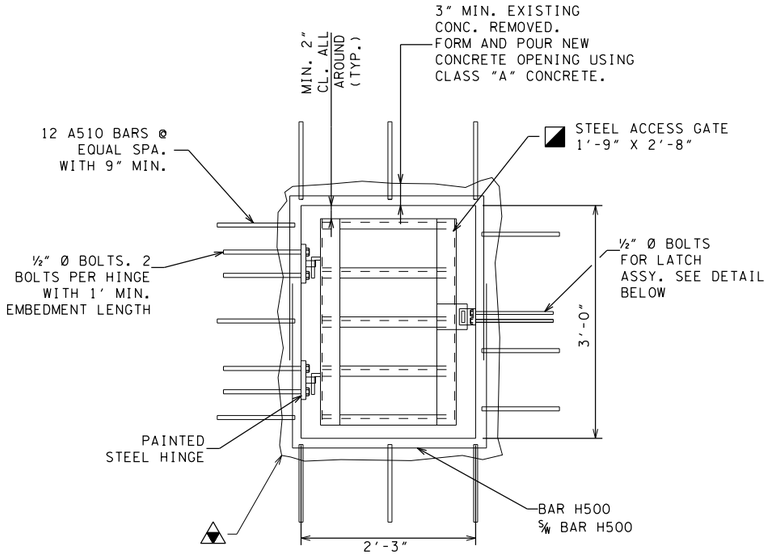

ACCESS DOOR 2 DETAIL
ELEVATION VIEW
NO SCALE

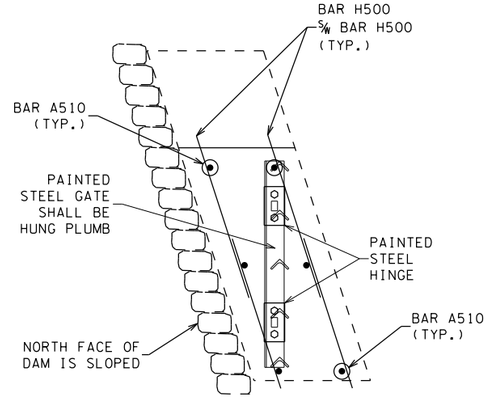

CROSS SECTION THROUGH ACCESS HOLE
SHOWING ACCESS DOOR AND REINFORCEMENT
NO SCALE

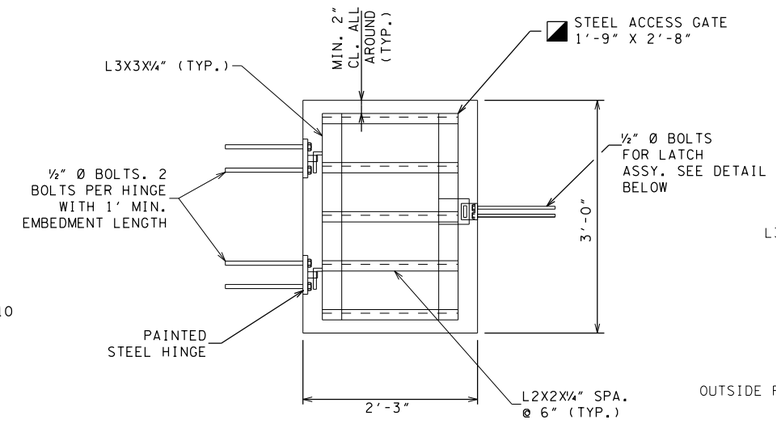

ACCESS DOOR 1 DETAIL
ELEVATION VIEW
NO SCALE

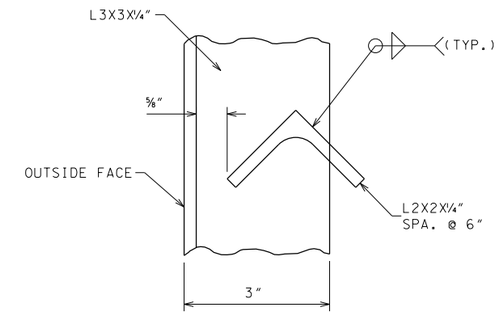

CROSS SECTION THROUGH ACCESS DOOR
SHOWING DETAIL FOR ACCESS DOOR CONNECTION
NO SCALE

SAW CUT 1" PERIMETER BEFORE REMOVING SPALLED CONCRETE TO SOUND CONCRETE. CLEAN AND PAINT ANY REINFORCEMENT THAT IS EXPOSED.

TO BE DESIGNED BY FABRICATOR AND PAINTED BLACK. COLOR SHALL BE APPROVED BY ENGINEER.

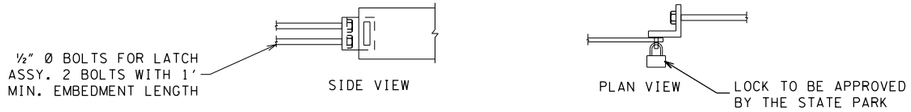

ACCESS DOOR LOCK DETAIL
NO SCALE

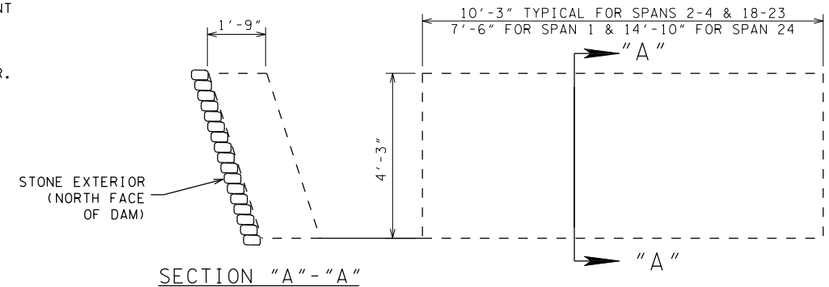

SECTION "A"-"A"
NO SCALE

TYPICAL EXISTING NORTH INTERIOR REINFORCED CONCRETE WALL
NO SCALE

CONCRETE INTERIOR WALL REPAIR PROCEDURE FOR REPAIRS DEEPER THAN 3 INCHES:

1. SAW CUT RECTANGULAR AREA (ONE INCH DEEP) FOR LENGTH (HORIZONTALLY AND VERTICALLY) AS NEEDED TO OBTAIN MINIMUN SPLICE LENGTH SHOWN IN NOTE 3.
2. CLEAN & PAINT EXISTING REINFORCING STEEL WITH EPOXY MASTIC PAINT PRIOR TO PERFORMING SPLICE REPAIRS..
3. SPLICE NEW IN-KIND REINFORCING STEEL AS DIRECTED BY ENGINEER.
4. IF A PORTION OF EXISTING BAR HAS EXCESSIVE LOSS OF SECTION, A NEW BAR SHALL BE SPLICED TO THE EXISTING BAR WITH THE FOLLOWING DIMENSIONS:
   FOR #9 BAR, MINIMUM SPLICE LENGTH OF 44 INCHES.
   FOR #5 BAR, MINIMUM SPLICE LENGTH OF 15 INCHES.
4. POUR BACK TO ORIGINAL LINES WITH HIGH EARLY STRENGTH CONCRETE ACCORDING TO DETAILS ON SHEET BR-116-11 AND MANUFACTURER'S SPECIFICATIONS.

NOTES:

1. CONCRETE REPAIR AREAS SHALL BE LOCATED BY THE ENGINEER.
2. REPAIR AREAS OF SPALLED OR DELAMINATED CONCRETE ON INTERIOR WALLS WITH QUICK SET PATCHING MATERIAL AND/OR HIGH EARLY STRENGTH CONCRETE.
3. THE AREAS TO BE REPAIRED SHALL BE SUFFICIENTLY LARGER THAN THE SPALLED AREAS TO ENSURE THAT PATCHES EXTEND INTO SOUND CONCRETE.
4. UNSOUND CONCRETE SHALL BE REMOVED TO A DEPTH OF ¾" BEHIND EXISTING REINFORCEMENT.
5. COST OF REMOVING ALL UNSOUND AND DETERIORATED CONCRETE, PLACING OF NEW CONCRETE, AND ALL LABOR AND MATERIALS NECESSARY FOR COMPLETING THE WORK SHALL BE PAID FOR UNDER ITEM NO. 604-03.01, CLASS "A" CONCRETE, C.Y.
6. CONTRACTOR SHALL BE RESPONSIBLE FOR THE STABILITY OF THE STRUCTURE DURING REPAIRS, INCLUDING TEMPORARY SHORING WHEN FULL BOTTOM OF CAP IS REQUIRED TO BE REPAIRED. COST OF SHORING TO BE INCLUDED IN OTHER ITEMS BID ON.
7. SEE DRAWING BR-116-11 FOR MORE DETAILS OF SPALLED CONCRETE REPAIR.
8. SEE DRAWING BR-116-11 FOR EPOXY INJECTION NOTES.

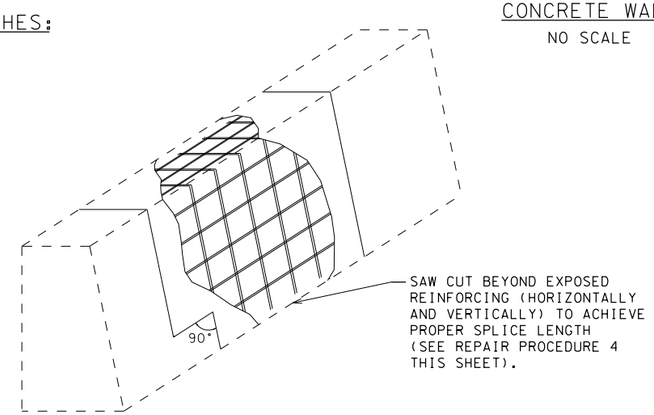

ELEVATION OF TYPICAL
EXISTING NORTH INTERIOR WALL
NO SCALE

UNOFFICIAL SET

NOT FOR BIDDING

NORTH INTERIOR WALL REPAIRS

604-03.01 CLASS "A" CONCRETE (BRIDGES) C.Y.	
SPAN	LEFT INTERIOR WALL
1	0.5
2	0.8
3	0.9
4	0.8
5	1.1
18	1.8
19	1.8
20	2.1
21	1.4
22	2.1
23	0.6
24	0.4
SPAN 2 ACCESS DOOR	0.7
TOTAL	15.0

BRADLEY E. BIVENS
REGISTERED ENGINEER
AGRICULTURE
COMMERCE
No. 21539
STATE OF TENNESSEE

STATE OF TENNESSEE
DEPARTMENT OF TRANSPORTATION

ACCESS DOOR AND
INTERIOR WALL DETAILS

BRIDGE NO. 67-SR136-14.30
STATE ROUTE 136
(STANDING STONE PARK HIGHWAY)
OVER MILL CREEK (PARK LAKE)
OVERTON COUNTY
2014

DESIGNED BY	MRP	DATE	10/2013
DRAWN BY	MRP	DATE	10/2013
SUPERVISED BY	BEB	DATE	10/2013
CHECKED BY	RMD	DATE	10/2013

BR-116-12

PROJECT NO.	YEAR	SHEET NO.
67008-4243-04	2014	

REVISIONS

NO.	DATE	BY	BRIEF DESCRIPTION

BENTS

BAR	LOCATION	SIZE	NO. REQ'D	BENDING DIMENSIONS A	B	C	D	LENGTH
A500	BENT 2	5	5					3'-0"
A900	BENT 2	9	4					4'-0"
A501	BENT 6	5	2					1'-6"
A901	BENT 6	9	1					4'-0"
A902	BENT 8	9	1					4'-0"
A502	BENT 10	5	2					1'-5"
A903	BENT 10	9	1					4'-0"

NOTE: LENGTH OF "A5" BARS IN BENT CAPS IS TO BE MEASURED AFTER REMOVAL OF DAMAGED CONCRETE AND ASSESSMENT OF EXISTING DAMAGED STIRRUPS BY ENGINEER. A5 BARS SHALL BE BENT IN FIELD TO FORM STIRRUPS.

NORTH INTERIOR WALL

BAR	LOCATION	SIZE	NO. REQ'D	BENDING DIMENSIONS A	B	C	D	LENGTH
A503	SPAN 18	5	4					4'-6"
A504	SPAN 18	5	2					9'-0"
A505	SPAN 18	5	3					6'-0"
A506	SPAN 19	5	2					4'-0"
A507	SPAN 19	5	2					3'-0"
A508	SPAN 20	5	4					4'-0"
A509	SPAN 20	5	4					3'-0"
A510	ACCESS DOOR 2	5	24					1'-0"
H500	ACCESS DOOR 2	5	4	2'-6"	2'-1½"			25'-6"

BARS A

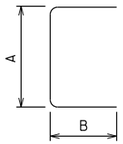

BARS H

BEAMS

BAR	SPAN	BEAM	SIZE	NO. REQ'D	BENDING DIMENSIONS A	B	C	D	LENGTH
A903	2	A	9	1					16'-0"

UNOFFICIAL SET

NOT FOR BIDDING

STATE OF TENNESSEE
DEPARTMENT OF TRANSPORTATION

BILL OF STEEL

BRIDGE NO. 67-SR136-14.30
STATE ROUTE 136
(STANDING STONE PARK HIGHWAY)
OVER MILL CREEK (PARK LAKE)
OVERTON COUNTY
2014

DESIGNED BY MRP DATE 11/2013
DRAWN BY MRP DATE 11/2013
SUPERVISED BY BEB DATE 11/2013
CHECKED BY RMD DATE 11/2013

BR-116-13