| FED ROAD DIST NO | STATE | FED AID PROJ NO | FISCAL YEAR | SHEET NO | TOTAL SHEETS |
|---|---|---|---|---|---|
| 8 | TENN | | 19 | 11 | 34 |

1-052-1-11

Specifications AASHO 1944 - H15 Loading

General Notes

Rivets: 5/8" in railing lattice - 5/8" in 2" lacing bars - 3/4" in flanges of 8", 9" & 10" I's - 7/8" elsewhere

Reaming: Main connections of trusses shall be sub-punched, assembled in the shop, reamed while assembled and match-marked. Floor-beam and stringer connections shall be sub-punched and reamed to a 1" steel template

Shop and Field Paint: See Specifications
Approval of Shop Drawings See Specifications
Concrete shall be Class A
Forms and Finish: See Specifications
Reinforcing Steel: See Specifications
All dimensions relating to reinforcement are to centers of bars

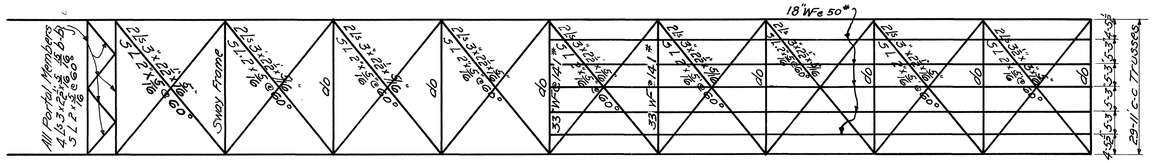


HALF PLAN OF TOP BRACING

HALF PLAN OF FLOOR FRAMING & BOTTOM BRACING

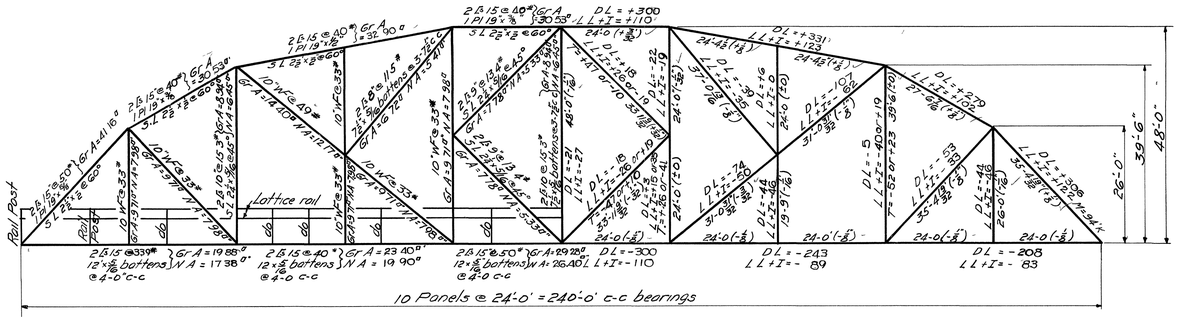


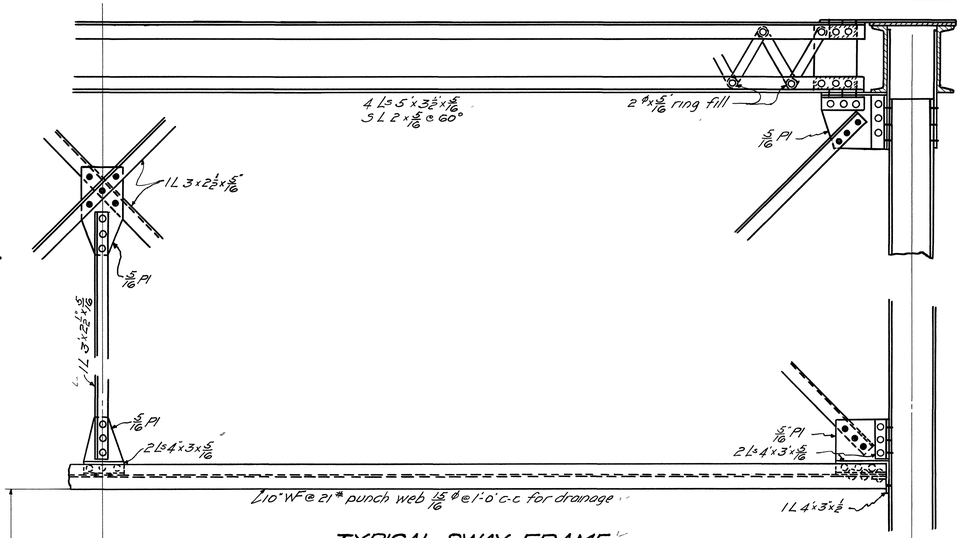


TYPICAL SWAY FRAME

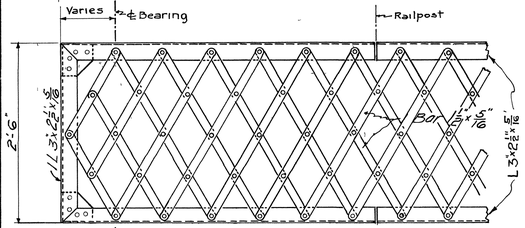


DETAIL OF LATTICE RAIL

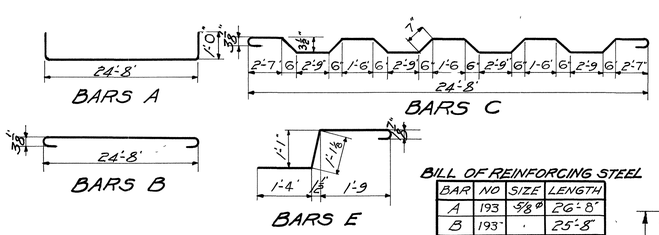


BENDING DETAILS

BILL OF REINFORCING STEEL

| BAR | NO | SIZE | LENGTH |
|---|---|---|---|
| A | 193 | 5/8 ⌀ | 26'-8" |
| B | 193 | " | 25'-8" |
| C | 192 | " | 26'-4" |
| D | 304 | 5/8 ⌀ | 31'-9" |
| E | 962 | 5/8 ⌀ | 4'-6" |

NOTE Bill of Steel above is figured c-c of end bearings

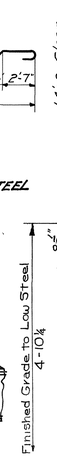


TYPICAL CROSS-SECTION

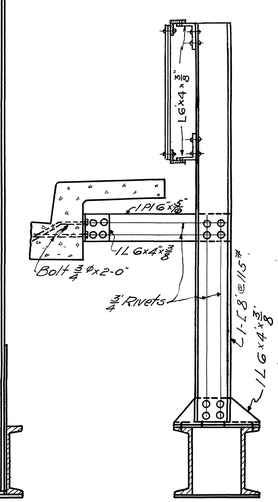


DETAIL OF INTERIOR RAIL POSTS

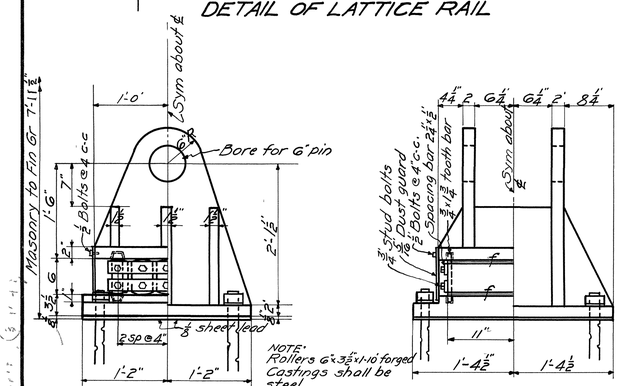


NOTE: Rollers 6" x 3 1/2" x 1'-10" forged Castings shall be steel

EXPANSION END FIXED END EXPANSION END FIXED END
SIDE ELEVATION END ELEVATION
DETAIL OF SHOES

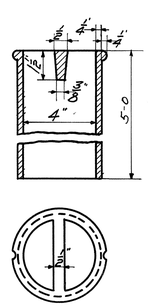


Direction of roadway

DETAIL OF C.I. DRAINS
40 Required

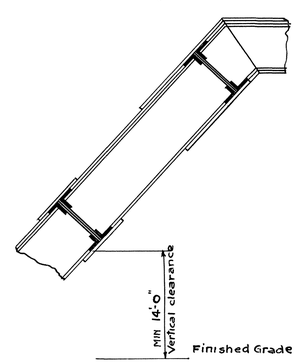


DETAIL SHOWING VERTICAL CLEARANCE AT PORTAL

ESTIMATED QUANTITIES

| | |
|---|---|
| Structural steel | 364,000 Lbs |
| Cast Steel | 6,209 Lbs |
| Reinforcing steel | 27,446 Lbs |
| Class A concrete | 1449 Cu Yds |

Cost of C I Drains in place shall be included in the price per cu yd of Class A concrete

STATE OF TENNESSEE
DEPARTMENT OF HIGHWAYS AND PUBLIC WORKS
NASHVILLE

STANDARD

# RIVETED HIGH TRUSS BRIDGE

SPAN 240'-0" ROADWAY 24'-0" SIDEWALKS 2@2'-0"
WITH
CONCRETE SLAB FLOOR
1949

CORRECT L. A. Erickson BRIDGE ENGINEER

APPROVED S. Em Lynn STATE HIGHWAY ENGINEER

B-6-135

Revised 5/23/49
Revised 5/23/49

Revised
DRAWN BY A.R Jessup DATE 5/23/49
TRACED BY DATE
CHECKED BY DATE

MICROFILMED

| FED. ROAD DIST. NO. | STATE | FED. AID PROJ. NO. | FISCAL YEAR | SHEET NO | TOTAL SHEETS |
|---|---|---|---|---|---|
| 8 | TENN. | | 19 | 43 | 150 |

F-043-14

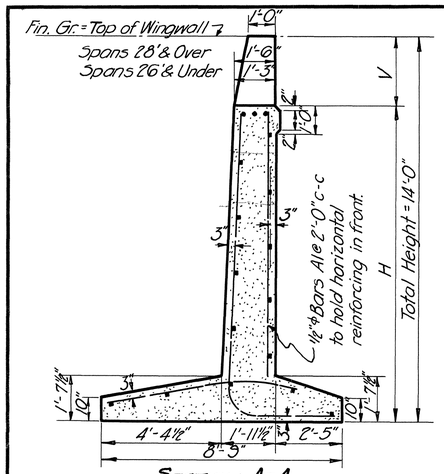


SECTION A-A

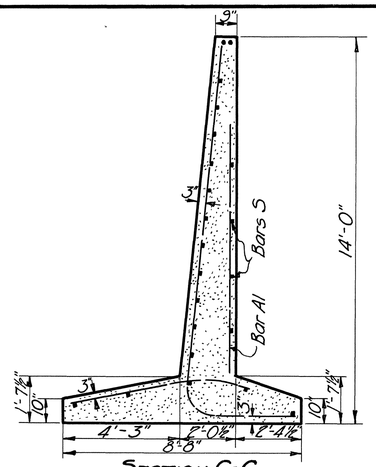


SECTION C-C

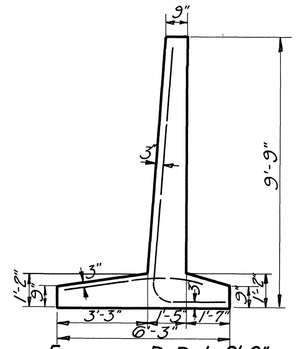


ELEVATION D-D-L=0'-0"

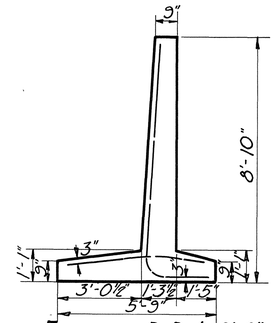


ELEVATION D-D-L=2'-0"

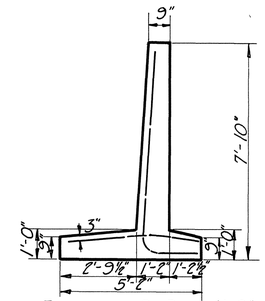


ELEVATION D-D-L=4'-0"

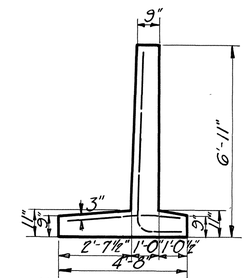


ELEVATION D-D-L=6'-0"

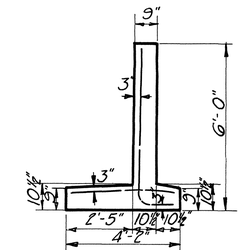


ELEVATION D-D-L=8'-0"

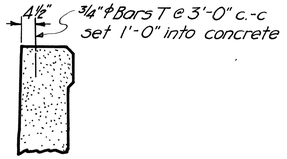


## DETAIL OF BRIDGE SEAT AT FIXED END

Add to Bill of Steel as follows:
For 20' Rdwy: 8-3/4"ϕ Bars T x 2'-0" = 24 Lb.
For 24' Rdwy: 9-3/4"ϕ Bars T x 2'-0" = 27 Lb.
For 40' Rdwy: 15-3/4"ϕ Bars T x 2'-0" = 46 Lb.

Note: When pouring Abutment Wall provision shall be made for setting bolts for Expansion plates. Location of these plates shown on Layout Sheet for each bridge.

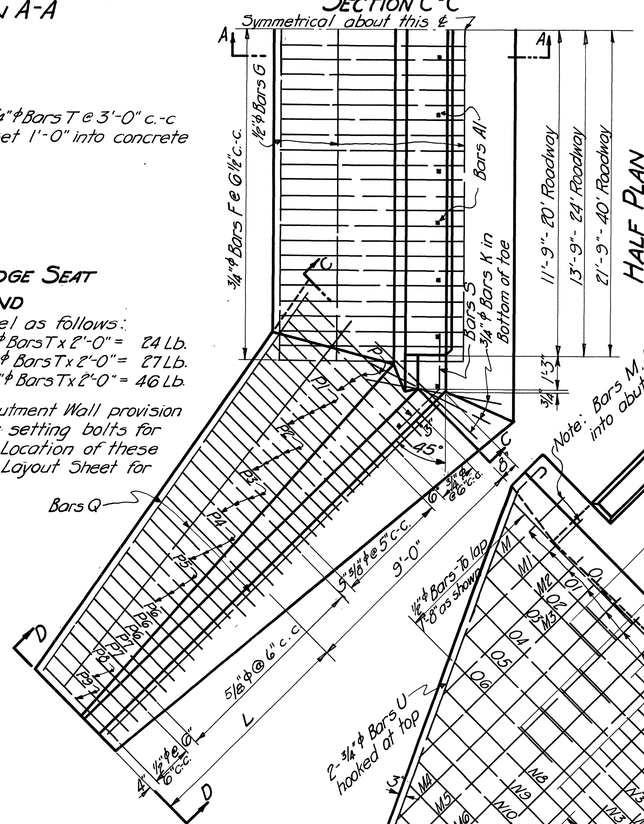


HALF PLAN

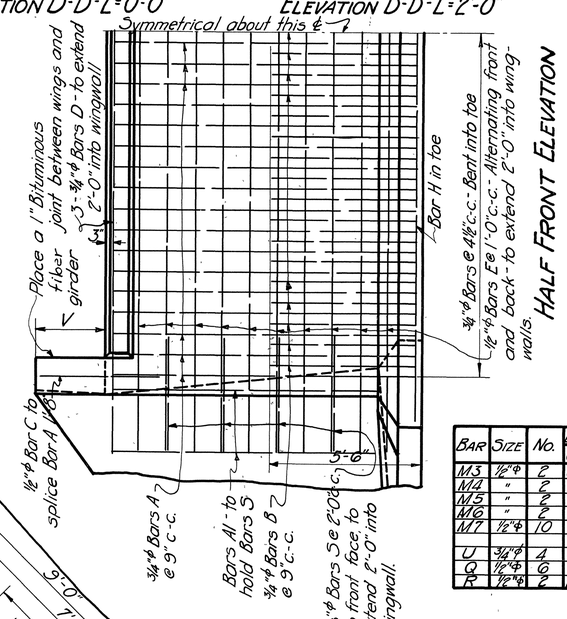


HALF FRONT ELEVATION

Note: Bars M, M1 bent into abutment wall.

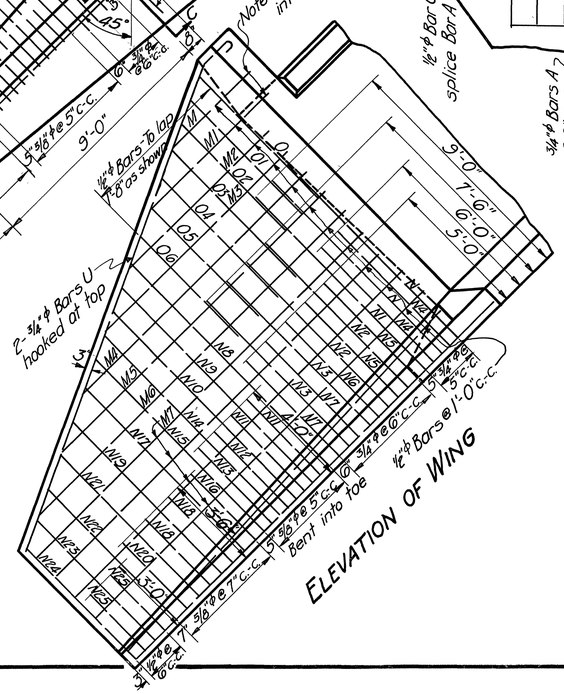


ELEVATION OF WING

Note: Place 4" tile drains @ 5'-0" c.-c. in abutment and Wingwalls at lowest point practical for good drainage.

## TABLE I
## BILL OF STEEL

CONSTANT FOR ALL WINGWALL LENGTHS AND ROADWAYS

| BAR | NO. | SIZE | LENGTH | BAR | NO. | SIZE | LENGTH |
|---|---|---|---|---|---|---|---|
| K | 6 | 3/4"ϕ | 5'-0" | N11 | 4 | 3/8"ϕ | 6'-3" |
| M | 2 | 1/2"ϕ | 4'-0" | N12 | 2 | 3/8"ϕ | 6'-0" |
| M1 | 2 | " | 6'-0" | O | 2 | 1/2"ϕ | 6'-3" |
| M2 | 2 | 1/2"ϕ | 7'-0" | O1 | 2 | " | 5'-9" |
| N | 4 | 3/4"ϕ | 12'-3" | O2 | 2 | " | 5'-6" |
| N1 | 2 | " | 12'-0" | O3 | 2 | " | 6'-6" |
| N2 | 4 | " | 10'-6" | O4 | 2 | " | 6'-0" |
| N3 | 4 | " | 10'-3" | O5 | 2 | " | 5'-6" |
| N4 | 4 | " | 9'-3" | O6 | 2 | 1/2"ϕ | 5'-0" |
| N5 | 4 | " | 8'-0" | P | 8 | 3/4"ϕ | 6'-6" |
| N6 | 2 | " | 7'-9" | P1 | 10 | 3/8"ϕ | 5'-9" |
| N7 | 4 | 3/4"ϕ | 7'-6" | P2 | 10 | " | 5'-6" |
| N8 | 2 | 3/8"ϕ | 12'-9" | P3 | 8 | 3/8"ϕ | 5'-3" |
| N9 | 2 | " | 12'-3" | | | | |
| N10 | 2 | 3/8"ϕ | 11'-9" | S | 8 | 3/8"ϕ | 4'-3" |

## TABLE II
## BILL OF STEEL FOR DIFFERENT ROADWAY WIDTHS

| | | 20' ROADWAY | | 24' ROADWAY | | 40' ROADWAY | |
|---|---|---|---|---|---|---|---|
| BAR | SIZE | NO. | LENGTH | NO. | LENGTH | NO. | LENGTH |
| A | 3/4"ϕ | 34 | * See Table IV | 40 | * | 60 | * |
| A1 | 1/2"ϕ | 16 | * See Table IV | 18 | * | 26 | * |
| B | 3/4"ϕ | 33 | 5'-0" | 39 | 5'-0" | 61 | 5'-0" |
| C | 1/2"ϕ | 2 | * See Table IV | 2 | * | 2 | * |
| D | 3/4"ϕ | 3 | 30'-0" | 3 | 34'-0" | 6 | 26'-3" |
| E | 1/2"ϕ | * See Table IV | 30'-0" | * | 34'-0" | * | 25'-9" |
| F | 3/4"ϕ | 45 | 6'-8" | 53 | 6'-8" | 81 | 6'-8" |
| G | 1/2"ϕ | 3 | 24'-0" | 3 | 28'-3" | 6 | 22'-6" |
| H | 1/2"ϕ | 1 | 28'-0" | 1 | 32'-0" | 2 | 24'-9" |

* See Table IV

## TABLE IV

| V | H | BARS A LGTH | BARS A1 LGTH | BARS C LGTH | NO. BARS E ROADWAY 20' & 24' | NO. BARS E ROADWAY 40' |
|---|---|---|---|---|---|---|
| 2'-0" | 12'-0" | 15'-3" | 10'-0" | 3'-9" | 10 | 20 |
| 2'-2" | 11'-10" | 15'-0" | 9'-9" | 4'-0" | 10 | 20 |
| 2'-3" | 11'-9" | 15'-0" | 9'-9" | 4'-0" | 10 | 20 |
| 2'-4" | 11'-8" | 15'-0" | 9'-9" | 4'-0" | 10 | 20 |
| 2'-5" | 11'-7" | 14'-9" | 9'-6" | 4'-3" | 10 | 20 |
| 2'-6" | 11'-6" | 14'-9" | 9'-6" | 4'-3" | 10 | 20 |
| 2'-7" | 11'-5" | 14'-9" | 9'-6" | 4'-3" | 10 | 20 |
| 2'-9" | 11'-3" | 14'-6" | 9'-3" | 4'-6" | 10 | 20 |
| 2'-10" | 11'-2" | 14'-6" | 9'-3" | 4'-6" | 10 | 20 |
| 2'-11" | 11'-1" | 14'-3" | 9'-0" | 4'-9" | 10 | 20 |
| 3'-1" | 10'-11" | 14'-3" | 9'-0" | 4'-9" | 9 | 18 |
| 3'-3" | 10'-9" | 14'-0" | 8'-9" | 5'-0" | 9 | 18 |
| 3'-5" | 10'-7" | 13'-9" | 8'-6" | 5'-3" | 9 | 18 |

## TABLE III
## BILL OF STEEL FOR WINGWALLS

| BAR | SIZE | NO. | LENGTH REQUIRED WHEN L= 0'-0" | 2'-0" | 4'-0" | 6'-0" | 8'-0" |
|---|---|---|---|---|---|---|---|
| M3 | 1/2"ϕ | 2 | 8'-9" | 9'-3" | 9'-3" | 9'-3" | 9'-3" |
| M4 | " | 2 | 8'-9" | 10'-9" | 11'-6" | 11'-6" | 11'-6" |
| M5 | " | 2 | 8'-9" | 10'-9" | 12'-9" | 13'-6" | 13'-6" |
| M6 | " | 2 | 8'-9" | 10'-9" | 12'-9" | 14'-9" | 15'-9" |
| M7 | 1/2"ϕ | 10 | 8'-9" | 10'-9" | 12'-9" | 14'-9" | 16'-9" |
| U | 3/4"ϕ | 4 | 11'-6" | 13'-9" | 16'-0" | 18'-3" | 20'-3" |
| Q | 1/2"ϕ | 6 | 8'-9" | 10'-9" | 12'-9" | 14'-9" | 16'-9" |
| R | 1/2"ϕ | 2 | 10'-0" | 12'-0" | 14'-0" | 16'-0" | 18'-0" |

| BAR | SIZE | LENGTH | NO. REQUIRED WHEN L= 0'-0" | 2'-0" | 4'-0" | 6'-0" | 8'-0" |
|---|---|---|---|---|---|---|---|
| N13 | 3/8"ϕ | 6'-0" | – | 2 | 2 | 2 | 2 |
| N14 | " | 11'-3" | – | 2 | 2 | 2 | 2 |
| N15 | " | 10'-9" | – | 2 | 2 | 2 | 2 |
| N16 | " | 5'-3" | – | 2 | 2 | 2 | 2 |
| N17 | " | 10'-3" | – | – | 2 | 2 | 2 |
| N18 | " | 5'-0" | – | – | 4 | 4 | 4 |
| N19 | " | 9'-9" | – | – | 2 | 2 | 2 |
| N20 | " | 4'-9" | – | – | – | 2 | 2 |
| N21 | " | 8'-9" | – | – | – | 2 | 2 |
| N22 | 3/8"ϕ | 8'-0" | – | – | – | 2 | 2 |
| N23 | 1/2"ϕ | 7'-3" | – | – | – | – | 2 |
| N24 | " | 6'-9" | – | – | – | – | 2 |
| N25 | 1/2"ϕ | 4'-0" | – | – | – | – | 4 |
| P4 | 3/8"ϕ | 5'-0" | 2 | 8 | 8 | 8 | 8 |
| P5 | 3/8"ϕ | 4'-9" | – | 2 | 8 | 8 | 8 |
| P6 | " | 4'-6" | – | – | 2 | 6 | 6 |
| P7 | 3/8"ϕ | 4'-3" | – | – | – | 4 | 4 |
| P8 | 1/2"ϕ | 4'-0" | – | – | – | – | 4 |
| P9 | 1/2"ϕ | 3'-9" | – | – | – | – | 4 |

## ESTIMATED QUANTITIES
L=0'-0"

| V | H | 20' ROADWAY CLASS A CONCRETE CU. YDS. | 20' ROADWAY REINFORC. STEEL LB. | 24' ROADWAY CLASS A CONCRETE CU. YDS. | 24' ROADWAY REINFORC. STEEL LB. | 40' ROADWAY CLASS A CONCRETE CU. YDS. | 40' ROADWAY REINFORC. STEEL LB. |
|---|---|---|---|---|---|---|---|
| 2'-0" | 12'-0" | 41.5 | 3339 | 45.7 | 3706 | 62.5 | 5040 |
| 2'-2" | 11'-10" | 41.3 | 3324 | 45.4 | 3689 | 62.0 | 5014 |
| 2'-3" | 11'-9" | 41.1 | 3324 | 45.3 | 3689 | 61.8 | 5014 |
| 2'-4" | 11'-8" | 41.0 | 3324 | 45.1 | 3689 | 61.6 | 5014 |
| 2'-5" | 11'-7" | 40.9 | 3309 | 45.0 | 3671 | 61.4 | 4987 |
| 2'-6" | 11'-6" | 40.8 | 3309 | 44.8 | 3671 | 61.1 | 4987 |
| 2'-7" | 11'-5" | 41.9 | 3309 | 46.1 | 3671 | 63.1 | 4987 |
| 2'-9" | 11'-3" | 41.6 | 3293 | 45.8 | 3653 | 62.6 | 4961 |
| 2'-10" | 11'-2" | 41.5 | 3293 | 45.7 | 3653 | 62.4 | 4961 |
| 2'-11" | 11'-1" | 41.4 | 3278 | 45.5 | 3636 | 62.2 | 4934 |
| 3'-1" | 10'-11" | 41.1 | 3258 | 45.2 | 3613 | 61.7 | 4900 |
| 3'-3" | 10'-9" | 40.9 | 3243 | 44.9 | 3595 | 61.2 | 4873 |
| 3'-5" | 10'-7" | 40.6 | 3228 | 44.6 | 3578 | 60.7 | 4847 |

Note: If fixed end is on Abutment, add Bars T as shown on this sheet.

## 2 WINGWALLS

| L | CLASS A CONCRETE CU. YDS. | REINFORC. STEEL LB. |
|---|---|---|
| 2'-0" | 2.2 | 156 |
| 4'-0" | 4.1 | 301 |
| 6'-0" | 5.5 | 417 |
| 8'-0" | 7.0 | 505 |

Note: For width of Roadway and values of V, H and L see Layout sheet for each bridge.

## GENERAL NOTES:

Specifications: Standard Road and Bridge Specifications of the Tennessee Department of Highways and Public Works.
Concrete shall be Class "A."
Reinforcing Steel: See Specifications.
Forms and Finish: See Specifications.
Rock Foundation: See Specifications.

STATE OF TENNESSEE
DEPARTMENT OF HIGHWAYS AND PUBLIC WORKS
NASHVILLE

STANDARD

# CONCRETE ABUTMENT

FOR DECK GIRDER BRIDGES
TOTAL HEIGHT 14'-0" ROADWAYS 20', 24' & 40'
1939

CORRECT L. N. Erickson
BRIDGE ENGINEER
APPROVED E. M. Turner
STATE HIGHWAY ENGINEER

B-10-114

DESIGNED BY H.T.W. DATE 1-21-39
DRAWN BY Edward Hansard DATE 2-17-39
TRACED BY DATE
CHECKED BY H.S. DATE 2-7-39

Revised 2-2-48 Bar Weight Changed
Revised 3/19/47 Bar Weight Changed

MICROFILMED

DIETZGEN IMPERIAL No. 115

| FED ROAD DIST. NO | STATE | FED AID PROJ. |
|---|---|---|
| 8 | TENN. | |

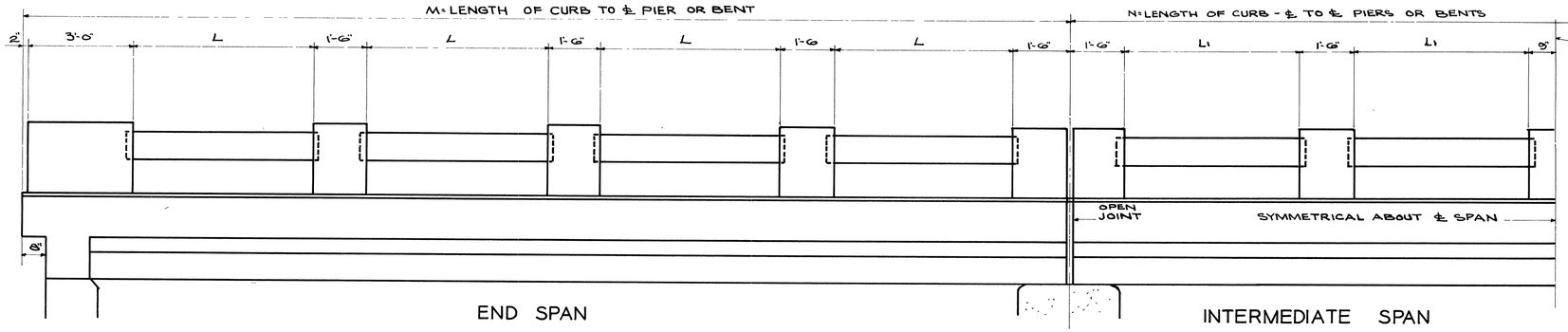


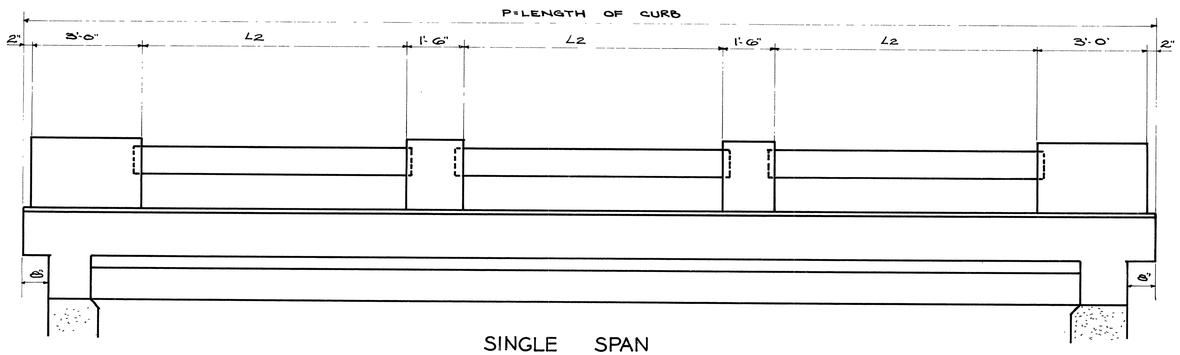


## END SPAN

| CLEAR SPAN FEET | DIMENSIONS M | DIMENSIONS L | REINFORCING STEEL BARS A 5/8"φ x 3'-5" NO | BARS B 1/2"φ x 7'-8" NO. | BARS C 1/2"φ x 4'-8" NO. | BARS D 3/8"φ x 2'-6" NO. | BARS E 1/2"φ NO | BARS E 1/2"φ LGTH. | QUANTITIES CONCRETE CLASS "A" CU.YDS. | QUANTITIES REINF. STEEL LBS. |
|---|---|---|---|---|---|---|---|---|---|---|
| 16 | 19'-2" | 2@ 6'-6" | 28 | 6 | 12 | 28 | 16 | 6'-8" | 1.3 | 266 |
| 18 | 21'-2" | 3@ 4'-6" | 36 | 6 | 18 | 30 | 24 | 4'-8" | 1.6 | 318 |
| 20 | 23'-2" | 3@ 5'-2" | 36 | 6 | 18 | 36 | 24 | 5'-4" | 1.6 | 335 |
| 22 | 25'-2" | 3@ 5'-10" | 36 | 6 | 18 | 36 | 24 | 6'-0" | 1.7 | 346 |
| 24 | 27'-2" | 3@ 6'-6" | 36 | 6 | 18 | 42 | 24 | 6'-8" | 1.7 | 362 |
| 26 | 29'-2" | 4@ 5'-0" | 44 | 6 | 24 | 40 | 32 | 5'-2" | 2.0 | 411 |
| 28 | 31'-8" | 4@ 5'-7½" | 44 | 6 | 24 | 48 | 32 | 5'-10" | 2.1 | 433 |
| 30 | 33'-8" | 4@ 6'-1½" | 44 | 6 | 24 | 56 | 32 | 6'-4" | 2.1 | 452 |
| 32 | 35'-8" | 4@ 6'-7½" | 44 | 6 | 24 | 56 | 32 | 6'-10" | 2.2 | 462 |
| 34 | 37'-8" | 4@ 5'-4¾" 1@ 5'-5" | 52 | 6 | 30 | 60 | 40 | 5'-7" | 2.4 | 517 |
| 36 | 39'-8" | 4@ 5'-8⅝" 1@ 5'-9½" | 52 | 6 | 30 | 60 | 40 | 6'-0" | 2.5 | 528 |
| 38 | 41'-8" | 4@ 6'-2⅜" 1@ 6'-2½" | 52 | 6 | 30 | 70 | 40 | 6'-5" | 2.6 | 548 |
| 40 | 43'-8" | 4@ 6'-7¼" 1@ 6'-7" | 52 | 6 | 30 | 70 | 40 | 6'-9" | 2.6 | 557 |
| 50 | 53'-8" | 6@ 6'-11" | 60 | 6 | 36 | 84 | 48 | 7'-0" | 3.1 | 662 |

## INTERMEDIATE SPAN

| CLEAR SPAN FEET | DIMENSIONS N | DIMENSIONS L1 | REINFORCING STEEL BARS A 5/8"φ @ 5'-5" NO. | BARS B 1/2"φ @ 7'-8" NO. | BARS C 1/2"φ @ 4'-8" NO. | BARS D 3/8"φ @ 2'-6" NO. | BARS E 1/2"φ NO | BARS E 1/2"φ LGTH. | QUANTITIES CONCRETE CLASS "A" CU.YDS. | QUANTITIES REINF. STEEL LBS. |
|---|---|---|---|---|---|---|---|---|---|---|
| 16 | 18'-6" | 2@ 7'-0" | 24 | — | 18 | 28 | 16 | 7'-2" | 1.1 | 245 |
| 18 | 20'-6" | 3@ 4'-10" | 32 | — | 24 | 30 | 24 | 5'-0" | 1.4 | 298 |
| 20 | 22'-6" | 3@ 5'-6 | 32 | — | 24 | 36 | 24 | 5'-8" | 1.4 | 314 |
| 22 | 24'-6" | 3@ 6'-2" | 32 | — | 24 | 42 | 24 | 6'-4" | 1.5 | 331 |
| 24 | 26'-6" | 3@ 6'-10" | 32 | — | 24 | 42 | 24 | 7'-0" | 1.6 | 342 |
| 26 | 28'-6" | 4@ 5'-3" | 40 | — | 30 | 48 | 32 | 5'-5" | 1.8 | 398 |
| 28 | 31'-0" | 4@ 5'-10½" | 40 | — | 30 | 48 | 32 | 6'-1" | 1.9 | 412 |
| 30 | 33'-0" | 4@ 6'-4½" | 40 | — | 30 | 56 | 32 | 6'-7" | 1.9 | 431 |
| 32 | 35'-0" | 4@ 6'-10½" | 40 | — | 30 | 56 | 32 | 7'-1" | 2.0 | 441 |
| 34 | 37'-0" | 4@ 5'-7¼" 1@ 5'-7" | 48 | — | 36 | 60 | 40 | 5'-9" | 2.2 | 495 |
| 36 | 39'-0" | 5@ 6'-0" | 48 | — | 36 | 60 | 40 | 6'-2" | 2.3 | 506 |
| 38 | 41'-0" | 4@ 6'-4¾" 1@ 6'-5" | 48 | — | 36 | 70 | 40 | 6'-7" | 2.4 | 527 |
| 40 | 43'-0" | 4@ 6'-9⅝" 1@ 6'-9½" | 48 | — | 36 | 70 | 40 | 7'-0" | 2.4 | 538 |
| 50 | 53'-0" | 6@ 7'-1" | 56 | — | 42 | 84 | 48 | 7'-3" | 2.9 | 643 |

## SINGLE SPAN

| CLEAR SPAN FEET | DIMENSIONS P | DIMENSIONS L2 | REINFORCING STEEL BARS A 5/8"φ x 3'-5" NO. | BARS B 1/2"φ x 7'-8" NO. | BARS C 1/2"φ x 4'-8" NO. | BARS D 3/8"φ x 2'-6" NO. | BARS E 1/2"φ NO. | BARS E 1/2"φ LGTH. | QUANTITIES CONCRETE CLASS "A" CU.YDS. | QUANTITIES REINF. STEEL LBS. |
|---|---|---|---|---|---|---|---|---|---|---|
| 16 | 18'-10" | 2@ 6'-0" | 32 | 12 | 6 | 24 | 16 | 6'-2" | 1.5 | 283 |
| 18 | 21'-10" | 3@ 4'-2" | 40 | 12 | 12 | 30 | 24 | 4'-4" | 1.7 | 340 |
| 20 | 23'-10" | 3@ 4'-10" | 40 | 12 | 12 | 30 | 24 | 5'-0" | 1.8 | 351 |
| 22 | 25'-10" | 3@ 5'-6" | 40 | 12 | 12 | 36 | 24 | 5'-8" | 1.9 | 367 |
| 24 | 27'-10" | 3@ 6'-2" | 40 | 12 | 12 | 42 | 24 | 6'-4" | 1.9 | 383 |
| 26 | 29'-10" | 3@ 6'-10" | 40 | 12 | 12 | 42 | 24 | 7'-0" | 2.0 | 394 |
| 28 | 32'-4" | 4@ 5'-4½" | 48 | 12 | 18 | 48 | 32 | 5'-7" | 2.3 | 454 |
| 30 | 34'-4" | 4@ 5'-10½" | 48 | 12 | 18 | 48 | 32 | 6'-1" | 2.3 | 465 |
| 32 | 36'-4" | 4@ 6'-4½" | 48 | 12 | 18 | 56 | 32 | 6'-7" | 2.4 | 483 |
| 34 | 38'-4" | 4@ 6'-10½" | 48 | 12 | 18 | 56 | 32 | 7'-1" | 2.5 | 494 |
| 36 | 40'-4" | 4@ 5'-7¼" 1@ 5'-7" | 56 | 12 | 24 | 60 | 40 | 5'-9" | 2.7 | 547 |
| 38 | 42'-4" | 5@ 6'-0" | 56 | 12 | 24 | 60 | 40 | 6'-2" | 2.8 | 558 |
| 40 | 44'-4" | 4@ 6'-4¾" 1@ 6'-5" | 56 | 12 | 24 | 70 | 40 | 6'-7" | 2.8 | 579 |
| 50 | 54'-4" | 6@ 6'-8" | 64 | 12 | 30 | 84 | 48 | 6'-11" | 3.3 | 685 |

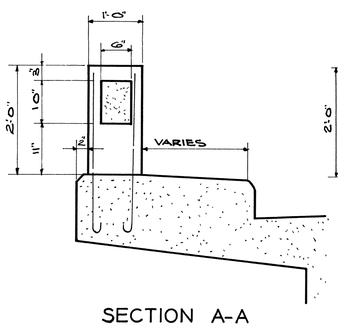


SECTION A-A

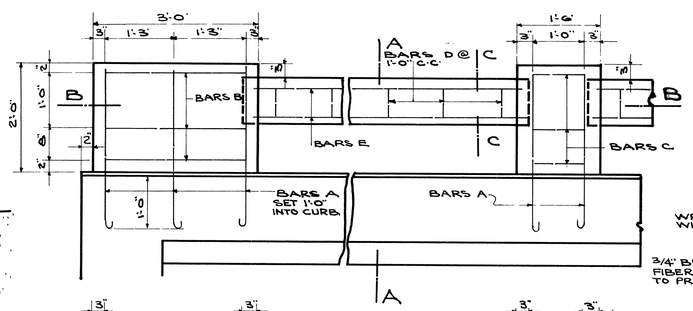


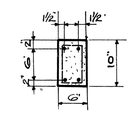


SECTION C-C

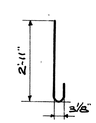


BARS A

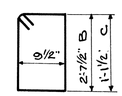


BARS B + C

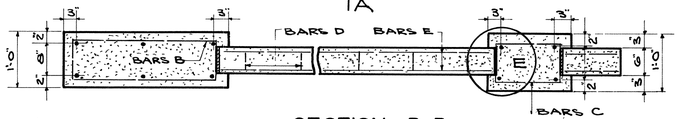


SECTION B-B

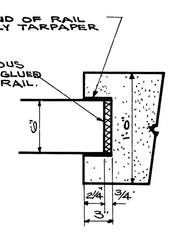


DETAIL E

BARS D

NOTE: ALL PARTS OF HANDRAIL TO BE CHAMFERED 1½"

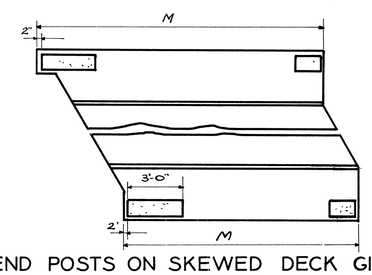


END POSTS ON SKEWED DECK GIRDER

## GENERAL NOTES:

SPECIFICATIONS: STANDARD ROAD & BRIDGE SPECIFICATIONS OF THE TENNESSEE DEPARTMENT OF HIGHWAYS & PUBLIC WORKS.

CONCRETE: TO BE CLASS "A".
REINFORCING STEEL: SEE SPECIFICATIONS.
FORMS & FINISH: SEE SPECIFICATIONS.

STATE OF TENNESSEE
DEPARTMENT OF HIGHWAYS
AND PUBLIC WORKS
NASHVILLE

# STANDARD
# CONCRETE HANDRAIL
## RAIL TYPE
FOR DECK GIRDERS AND I. BEAM SPANS
1947

DESIGNED BY _____ DATE _____
DRAWN BY M.S. DATE 7-17-47
RETRACED BY A. COHEN DATE 10-15-52
CHECKED BY _____ DATE _____

CORRECT: R. M. Erickson
BRIDGE ENGINEER

APPROVED: S. Finney
STATE HIGHWAY ENGINEER

C-10-54

| FED ROAD DIST NO. | STATE | FED. AID PROJ NO | FISCAL YEAR | SHEET NO | TOTAL SHEETS |
|---|---|---|---|---|---|
| 8 | TENN. | S-0501-19 | | 10 | 30 |

NOTE
E - EXPANSION END
F - FIXED END

## SECTION ALONG ℄ OF BRIDGE & ROADWAY

SCALE 1"=40'

NOTE: ROAD CONTRACTOR TO REMOVE PRESENT EMBANKMENT DOWN TO THE NATURAL GROUNDLINE AS SHOWN BY CROSSHATCHED AREA SEE ROADWAY PLANS
THE PRESENT ROADWAY EMBANKMENT AND ROCKWALL BETWEEN STA 14+77 AND STA 18+60 MUST BE LEFT IN PLACE

NOTE: PIERS No 2 & 3 & BENT No 30 TO BE SET 1'-0" INTO ROCK

## PLAN

NOTE PILES SHALL BE DRIVEN TO ROCK OR A MINIMUM BEARING OF 33 TONS.

## DESIGN DATA:

DRAINAGE AREA = 2100 SQ MI
A FACTOR C = 7 IN TALBOTS FORMULA GIVES
WATER AREA REQUIRED 2763.0 Sq FT
WATER AREA PROVIDED 2845.0 Sq FT

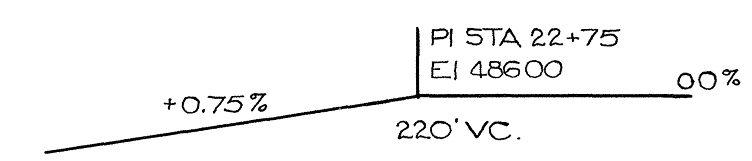


## SKETCH OF GRADES

NOTE ELEVATION SHOWN REFERS TO FINISHED GRADE

**SPECIAL NOTE:** REGARDING LUMP SUM
IN ADDITION TO REMOVING THE PIER DOWN TO THE BED OF THE STREAM THE CHANNEL SHALL BE CLEARED TO THE SATISFACTION OF THE DISTRICT ENGINEER OF THE U S WAR DEPARTMENT.
NO MATERIAL FROM THE PRESENT BRIDGE SHALL BE DUMPED IN THE RIVER.
ALL WORK SHALL BE COMPLETED NOT LATER THAN NINETY DAYS AFTER THE NEW BRIDGE HAS BEEN OPENED TO TRAFFIC.

## GENERAL NOTES

SPECIFICATIONS STANDARD ROAD & BRIDGE SPECIFICATIONS OF THE TENNESSEE DEPARTMENT OF HIGHWAYS & PUBLIC WORKS
LOADING: H15-44
CONCRETE TO BE CLASS 'A'
REINFORCING STEEL: SEE SPECIFICATIONS
FORMS & FINISH: SEE SPECIFICATIONS
ROCK FOUNDATION SEE SPECIFICATIONS
RIP-RAP SEE SPECIFICATIONS
PILES TO BE PRECAST CONCRETE

## LIST OF DRAWINGS

| | DWG. No. |
|---|---|
| HANDRAIL | C-10-54 |
| ⊙ * SPANS No 1-30,33 & 34 - 32 - 26' CLEAR SPANS | E-2-4 |
| * SPAN No. 31. - 50' CLEAR SPAN | E-2-5 |
| * SPAN No 32 - 240' HIGH TRUSS | B-6-135 |
| ** ABUTMENT No 1 - TYPE "B" BUTTRESS | E-2-54 |
| BENTS No 1-29 - SEE THIS SHEET & | E-2-56 |
| PIERS No 1-3 | C-13-87 |
| BENT No 30 - TOT. HEIGHT 32'-0" - TYPE "B" FOOTINGS | E-2-10 |
| Ŧ ** ABUTMENT No.2 - TYPE "B" - BUTTRESS | C-10-148 |
| SOUNDING DATA | C-13-88 |
| * SEE ALSO DETAILS ON | C-13-88 |
| ** SEE REVISED WINGS & BRIDGE SEAT ELEVATIONS ON | C-13-88 |

⊙ NOTE: STRUCTURAL STEEL PLATES SHALL BE USED INSTEAD OF THE BRONZE. THE SURFACES OF THE STEEL PLATES WHICH COME IN CONTACT SHALL BE COATED WITH GRAPHITE.

Ŧ Closed abutm. DWG B-10-114 used instead of O.T. Abutm.

**24'-0" ROADWAY WITH SAFETY CURBS**

## BRIDGE SEAT & PILE CUT-OFF ELEVATIONS

| BENT No. | BRIDGE SEAT ELEV | CUT-OFF PILES-ELEV | BENT No | BRIDGE SEAT ELEV. | CUT OFF PILES ELEV |
|---|---|---|---|---|---|
| 1 | 478.22 | 476.22 | 16 | 481.43 | 479.43 |
| 2 | 478.43 | 476.43 | 17 | 481.64 | 479.64 |
| 3 | 478.64 | 476.64 | 18 | 481.85 | 479.85 |
| 4 | 478.86 | 476.86 | 19 | 482.07 | 480.07 |
| 5 | 479.07 | 477.07 | 20 | 482.28 | 480.28 |
| 6 | 479.29 | 477.29 | 21 | 482.49 | 480.49 |
| 7 | 479.50 | 477.50 | 22 | 482.71 | 480.71 |
| 8 | 479.72 | 477.72 | 23 | 482.92 | 480.92 |
| 9 | 479.93 | 479.93 | 24 | 483.14 | 481.14 |
| 10 | 480.14 | 478.14 | 25 | 483.34 | 481.34 |
| 11 | 480.36 | 478.36 | 26 | 483.52 | 481.52 |
| 12 | 480.57 | 478.57 | 27 | 483.67 | 481.67 |
| 13 | 480.78 | 478.78 | 28 | 483.79 | 481.79 |
| 14 | 481.00 | 479.00 | 29 | 483.88 | 481.88 |
| 15 | 481.21 | 479.21 | | | |

NOTE
AFTER ROCK-FOUNDATIONS ARE UNCOVERED, HOLES 6 FT. DEEP SHALL BE DRILLED AT POINTS DESIGNATED BY THE ENGINEER.

## SPECIAL NOTE:

THIS BRIDGE IS TO BE CONSTRUCTED SO AS TO MEET THE REQUIREMENTS FOR NAVIGATION AS PRESCRIBED BY THE CHIEF ENGINEER OF THE U S WAR DEPARTMENT. ALL WORK SHALL BE SO CONDUCTED THAT THE FREE NAVIGATION OF THE STREAM SHALL NOT BE UNREASONABLY INTERFERED WITH, AND TO THE COMPLETE SATISFACTION OF THE DISTRICT ENGINEER OF THE U S WAR DEPARTMENT. ALL FALSE WORK, PILING OR OTHER OBSTRUCTIONS USED IN THE CONSTRUCTION OF THE BRIDGE SHALL BE REMOVED AS SOON AS THEY ARE NO LONGER NEEDED, AND IN ANY CASE, NOT LATER THAN NINETY DAYS AFTER THE BRIDGE HAS BEEN OPENED TO TRAFFIC ALL OBSTRUCTIONS USED DURING CONSTRUCTION THAT MIGHT INTERFERE WITH FREE NAVIGATION OF THE RIVER SHALL BE REMOVED DOWN TO THE BED OF THE RIVER NOT LATER THAN NINETY DAYS AFTER THE BRIDGE HAS BEEN OPEN TO TRAFFIC

## ESTIMATED QUANTITIES

| ITEM | EXCAVATION CU YDS. | | | CONCRETE CL 'A' | STEEL LB. | | | PRECAST CONCRETE PILES LIN. FT. | | RIP RAP | ROCK DRILLING |
|---|---|---|---|---|---|---|---|---|---|---|---|
| | DRY | WET | ROCK | CU YDS | REINFORC. | STRUCT | FORGINGS | SIZE 1 | SIZE 2 | CU YDS | LIN FT |
| SUPER STRUCTURE | | | | 60.9 | 13,405 | | | | | | |
| SPANS No 1-30,33 & 34 | | | | 1119.6 | 241,916 | 11,682 | | | | | |
| SPAN No 31 | | | | 83.9 | 18,441 | 515 | 788 | | | | |
| SPAN No 32 | | | | 145.8 | 27,243 | 372,572* | | | | | |
| SUBSTRUCTURE | | | | | | | | | | | |
| ABUTMENT No 1 | 170 | | 7 | 57.6 | 4128 | | | | | 175 | |
| BENTS No 1-29 | | | | 168.2 | 11,252 | -1194-✓ | | | | | |
| PIER No 1 | 260 | 15 | 15 | 130.0 | 3611 | | | | | | |
| PIER No. 2 | 140 | 335 | 20 | 312.0 | 5200 | | | | | | |
| PIER No. 3 | 185 | | 18 | 133.6 | 3164 | | | | | | |
| BENT No 30 | 52 | | 7 | 18.1 | 2245 | | | | | | |
| ABUTMENT No 2 | 10 | | 10 | 20.2 | 2816 | | | | | 90 | |
| TOTAL | 817 | 350 | 77 | 2249.9 | 333,421 (334,117) | 384,769 | 788 | 1432 | 3444 | 265 | 90 |

* INCLUDES EXPANSION DEVICE OVER PIER No 2
LUMP SUM FOR REMOVAL OF ABUTMENTS & PIER AND THE ROCK WALL BETWEEN STA 18+60 AND END OF BRIDGE. THE PIER MUST BE REMOVED DOWN TO THE BED OF STREAM.

STATE OF TENNESSEE
DEPARTMENT OF HIGHWAYS AND PUBLIC WORKS
NASHVILLE

# LAYOUT OF BRIDGE

STA. 14+77
DUCK RIVER
HICKMAN COUNTY
1948

CORRECT: L. W. Erickson
BRIDGE ENGINEER

APPROVED: S. Em. Squires
STATE HIGHWAY ENGINEER

C-13-86

DESIGNED BY ________ DATE ________
DRAWN BY W.S. DATE 12/2/48
TRACED BY W.J.S. DATE 3/28/49
CHECKED BY ________ DATE ________

| FED. ROAD DIST. NO. | STATE | FED. AID PROJ. NO. | FISCAL YEAR | SHEET NO. | TOTAL SHEETS |
|---|---|---|---|---|---|
| 8 | TENN. | | 19 | 14 | 32 |

5-050-1-(1)

NOTE: When pouring pier cap provision shall be made for setting bolts for bearing plates, location of which is shown on this sheet.

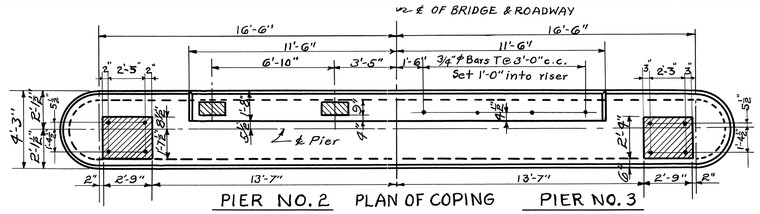


PIER NO. 2 PLAN OF COPING PIER NO. 3

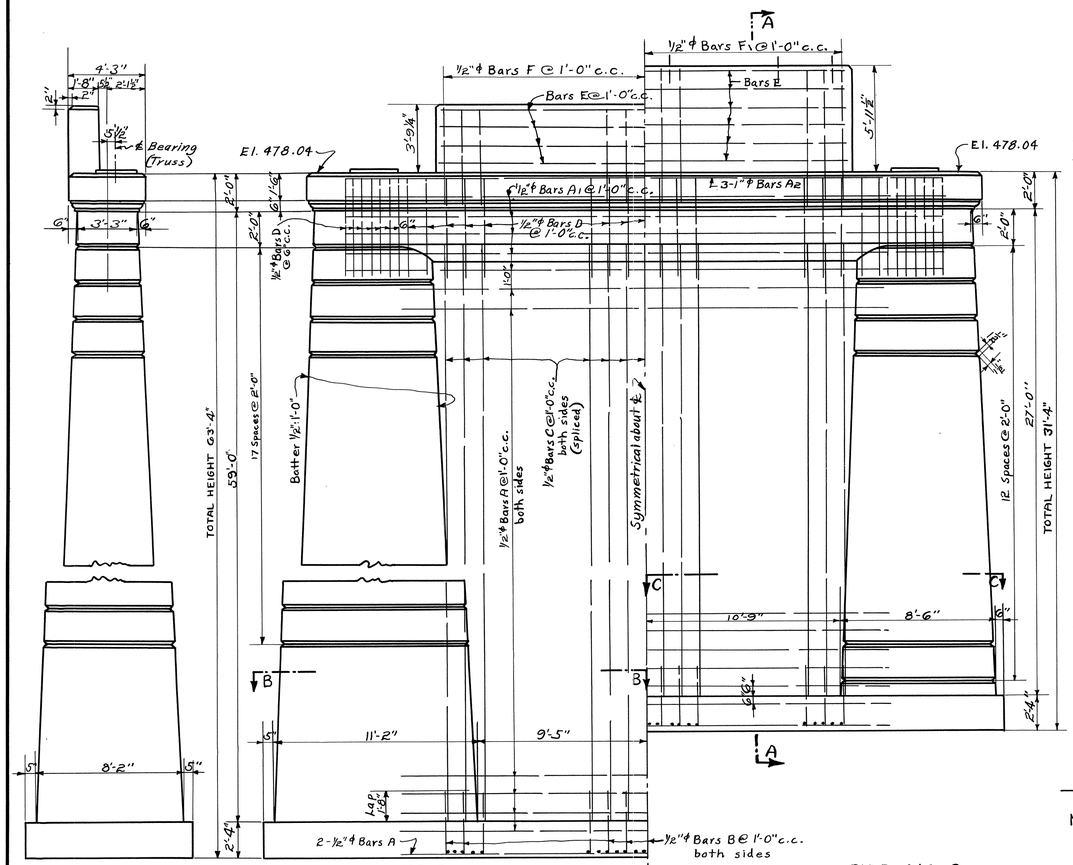


END ELEVATION PIER NO. 2 PIER NO. 2 HALF ELEVATION PIER NO. 3

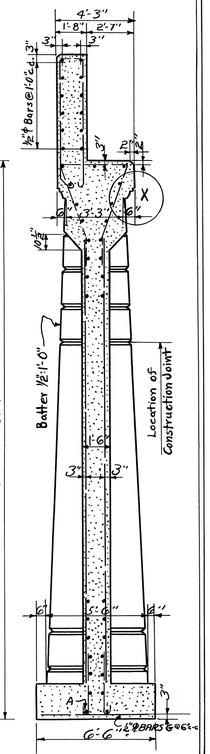


SECTION A-A
PIER NO. 3
NOTE: Pier no. 2 similar

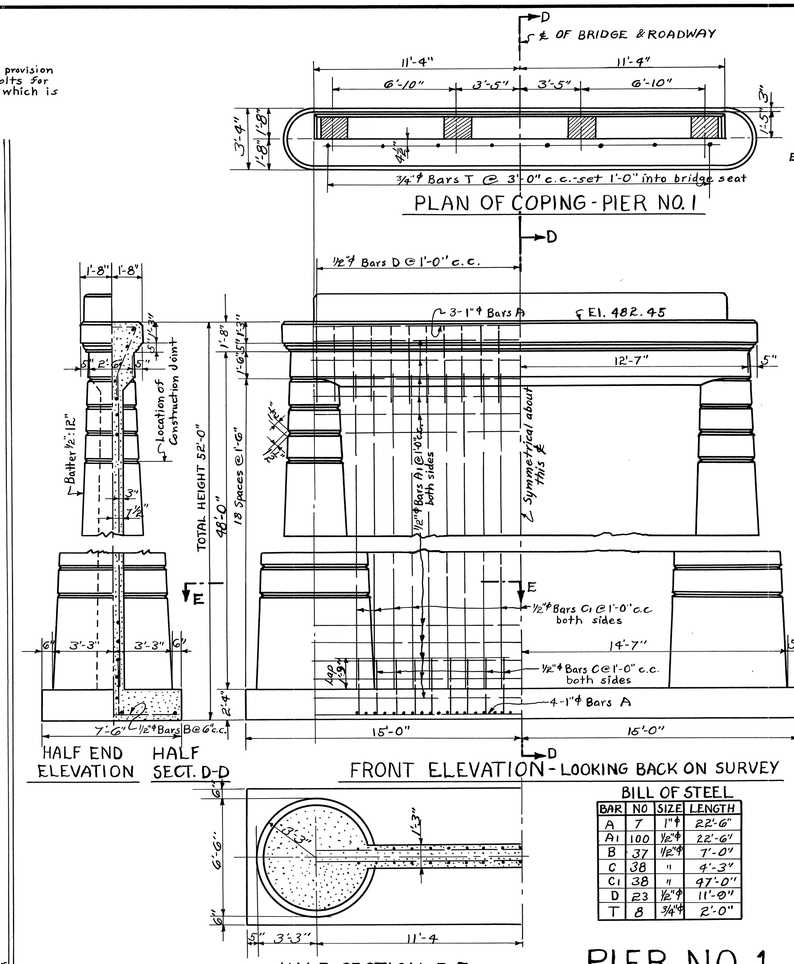


HALF END ELEVATION HALF SECT. D-D FRONT ELEVATION - LOOKING BACK ON SURVEY

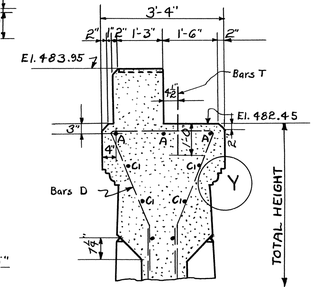


PART SECTION D-D

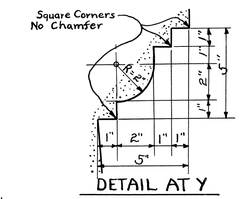


DETAIL AT Y

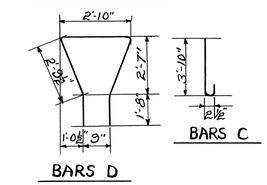


BARS D BARS C




HALF SECTION E-E

BILL OF STEEL

| BAR | NO | SIZE | LENGTH |
|---|---|---|---|
| A | 7 | 1"φ | 22'-6" |
| A1 | 100 | 1/2"φ | 22'-6" |
| B | 37 | 1/2"φ | 7'-0" |
| C | 38 | " | 4'-3" |
| C1 | 38 | " | 47'-0" |
| D | 23 | 1/2"φ | 11'-9" |
| T | 8 | 3/4"φ | 2'-0" |

ESTIMATED QUANTITIES

| | | |
|---|---|---|
| CONCRETE CLASS "A" | 130.0 | CU. YDS. |
| REINFORCING STEEL | 3611 | LB. |

# PIER NO. 1

NOTE:
Belt courses shall be spaced as shown. They shall be formed by nailing triangular strips inside the forms. The pouring of the concrete shall be so arranged that the construction joints between the successive lifts will be made on the apex of the bead as shown.

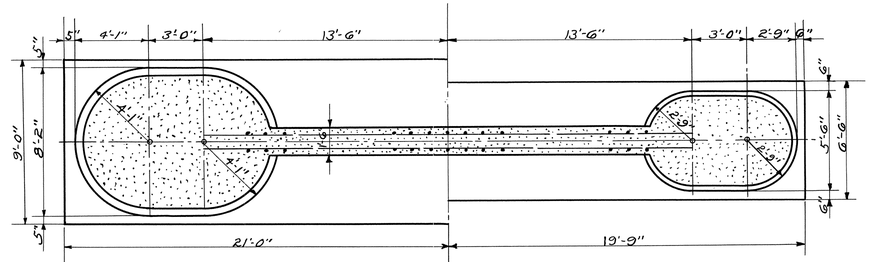


HALF SECTION B-B - PIER NO. 2 HALF SECTION C-C - PIER NO. 3

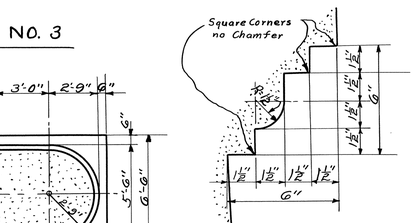


DETAIL AT "X"

BILL OF STEEL

| BAR | SIZE | PIER NO. 2 NO. | PIER NO. 2 LENGTH | PIER NO. 3 NO. | PIER NO. 3 LENGTH |
|---|---|---|---|---|---|
| A | 1/2"φ | 114 | 27'-0" | 50 | 27'-0" |
| A1 | 1/2"φ | 10 | 33'-0" | 10 | 33'-0" |
| A2 | 1"φ | 3 | 33'-0" | 3 | 33'-0" |
| B | 1/2"φ | 46 | 4'-2" | 46 | 4'-2" |
| C | 1/2"φ | 92 | 29'-3" | 46 | 25'-0" |
| D | 1/2"φ | 41 | 15'-1" | 41 | 15'-1" |
| E | 1/2"φ | 8 | 22'-6" | 12 | 22'-6" |
| F | " | 23 | 12'-9" | — | — |
| F1 | 1/2"φ | — | — | 23 | 17'-3" |
| T | 3/4"φ | — | — | 8 | 2'-0" |
| G | 1/2"φ | 45 | 8'-6" | 45 | 6'-0" |

ESTIMATED QUANTITIES

| | PIER NO. 2 | PIER NO. 3 |
|---|---|---|
| CONCRETE CLASS "A" Cu. Yds. | 316.7 | 136.7 |
| REINFORCING STEEL Lb. | 5466 | 3355 |

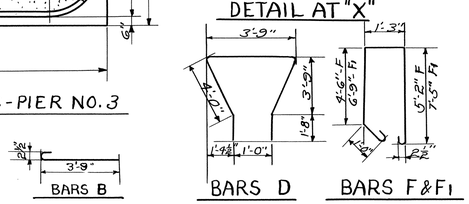


BARS D BARS F & F1




BARS B

STATE OF TENNESSEE
DEPARTMENT OF HIGHWAYS AND PUBLIC WORKS
NASHVILLE

# PIERS 1-3
BRIDGE AT STA. 14+77
HICKMAN CO.
1949

DESIGNED BY _____ DATE _____
DRAWN BY W.S. DATE 3-23-49
TRACED BY L.D.H. DATE 3-30-49
CHECKED BY _____ DATE _____

CORRECT L. W. Erickson BRIDGE ENGINEER
APPROVED S. E. Squires STATE HIGHWAY ENGINEER

C-13-87

WHS PROFILE RECD
Revised Liberty - Strong Boulevard.
REVISED 7-27-49

| FED. ROAD DIST. NO. | STATE | FED. AID PROJ. NO. | FISCAL YEAR | SHEET NO. | TOTAL SHEETS |
|---|---|---|---|---|---|
| 8 | TENN. | | 19 | 15 | 30 |

S-050-1-(1)

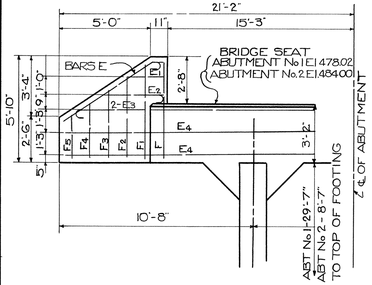


SKETCH SHOWING REVISED WINGWALLS FOR ABUTMENTS No.1 & 2

NOTE: SHORTEN F BARS TO FIT

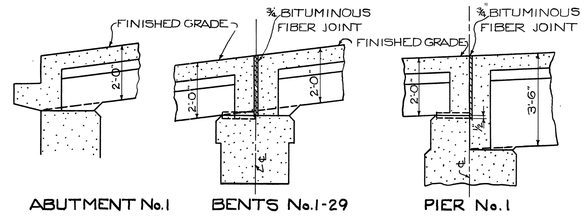


ABUTMENT No.1 BENTS No.1-29 PIER No.1

SKETCH SHOWING LOCATION & SIZE OF EXPANSION JOINTS AND BLOCKS POURED WITH BEAM STEMS TO OBTAIN LEVEL BEARINGS

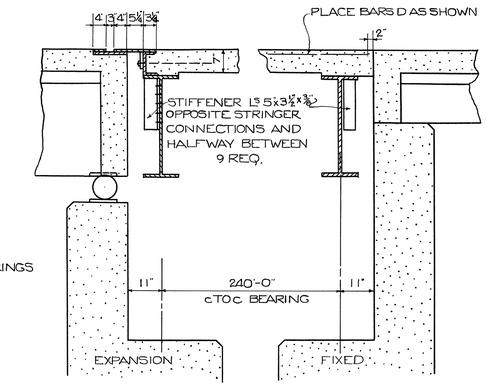


PIER No.2 PIER No.3

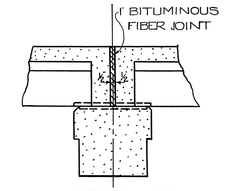


BENT No.30

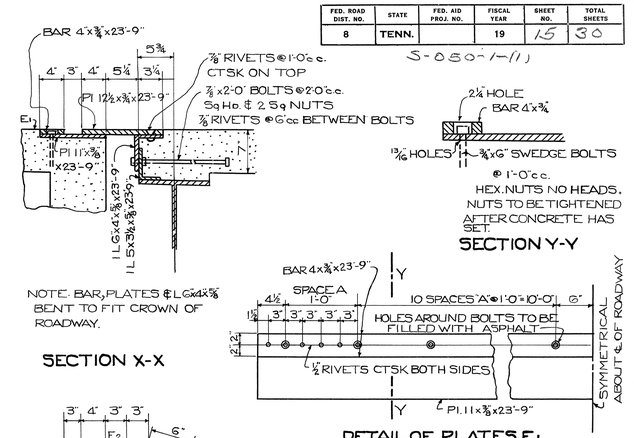


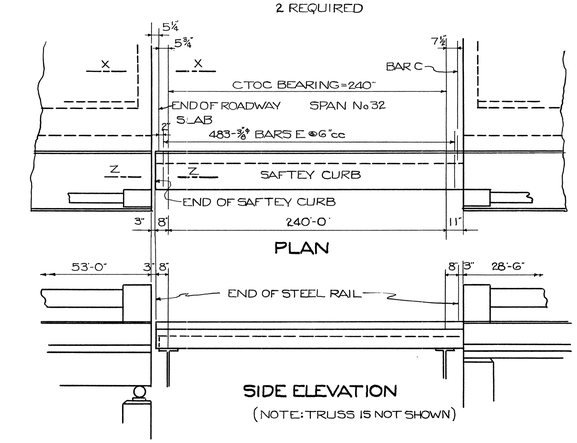


BILL OF REINFORCING STEEL FOR SPAN No. 32

| BAR | No. | SIZE | LENGTH |
|---|---|---|---|
| A | 193 | 5/8" | 26'-8" |
| B | 193 | " | 25'-8" |
| C | 193 | " | 26'-4" |
| D | 304 | 5/8" | 31'-0" |
| E | 966 | 3/8" | 4'-6" |

NOTE: ABOVE BILL OF STEEL SUPERSEDES BILL SHOWN ON DWG B-6-135

WEIGHT OF EXPANSION DEVICE E1 & E2 2363 LB OF STRUCTURAL STEEL.

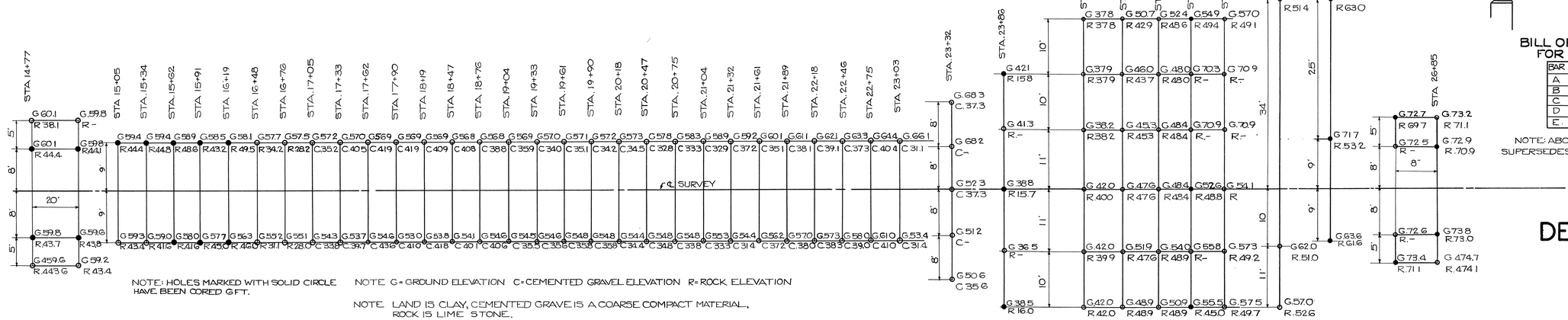


NOTE: HOLES MARKED WITH SOLID CIRCLE HAVE BEEN CORED 6 FT.

NOTE G = GROUND ELEVATION C = CEMENTED GRAVEL ELEVATION R = ROCK ELEVATION

NOTE LAND IS CLAY, CEMENTED GRAVEL IS A COARSE COMPACT MATERIAL, ROCK IS LIME STONE.

SOUNDING DATA

STATE OF TENNESSEE
DEPARTMENT OF HIGHWAYS AND PUBLIC WORKS
NASHVILLE

# DETAILS OF BRIDGE

STA. 14+77
HICKMAN COUNTY
1949

DESIGNED BY _____ DATE _____
DRAWN BY W.S. DATE 3/24/49
TRACED BY W.J.S. DATE 3/31/49
CHECKED BY _____ DATE _____

CORRECT L. N. Erickson BRIDGE ENGINEER
APPROVED S. En Squires STATE HIGHWAY ENGINEER

C-13-88

MICROFILMED

| FED ROAD DIST NO | STATE | FED AID PROJ NO | FISCAL YEAR | SHEET NO | TOTAL SHEETS |
|---|---|---|---|---|---|
| 8 | TENN | | 19 | 3 | [illegible] |

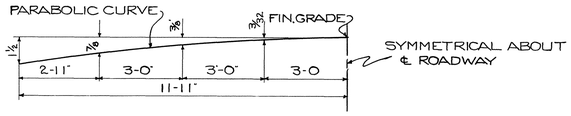


DETAIL OF ROADWAY TEMPLATE

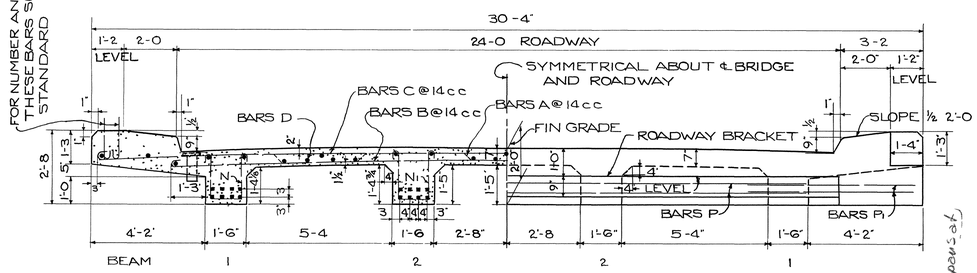


HALF SECTION A-A

HALF END ELEVATION ABUTMENT END

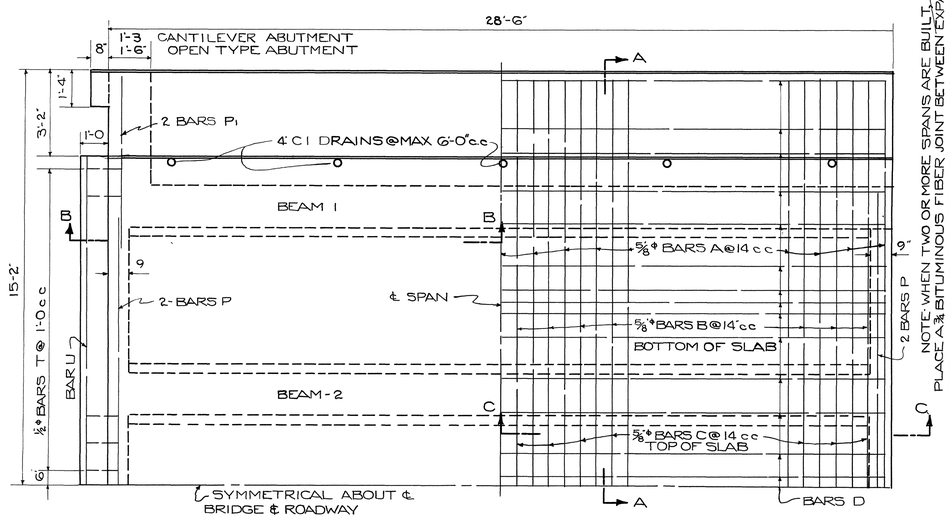


HALF PLAN

NOTE: WHEN TWO OR MORE SPANS ARE BUILT PLACE A ¾" BITUMINOUS FIBER JOINT BETWEEN EXPANSION END, A 1" JOINT IF THERE ARE TWO EXPANSION ENDS ON PIER OR BENT.

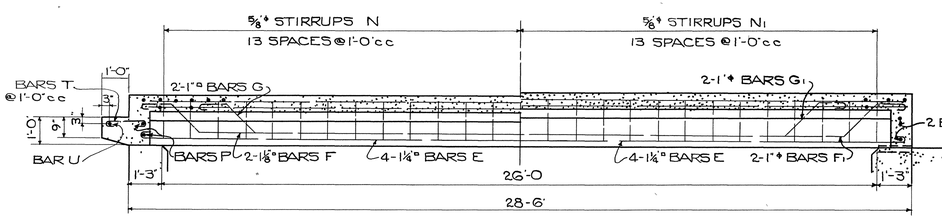


SECTION B-B-BEAM 1

SECTION C-C-BEAM 2

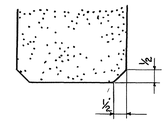

NOTE CHAMFER BOTTOM CORNERS OF BEAMS AS SHOWN.

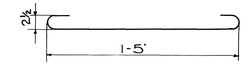


BARS T

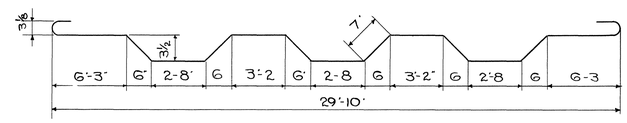


BARS A

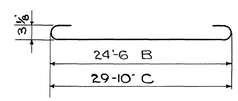


BARS B, C

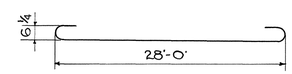


BARS E

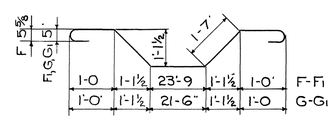


BARS F, F1, G, G1

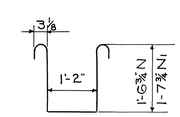


BARS N, N1

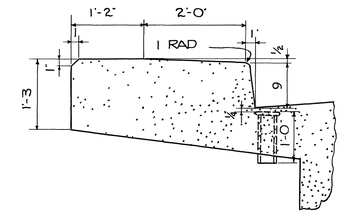


NOTE: TOP OF DRAIN PIPE TO BE ¼" BELOW TOP OF CONCRETE AS SHOWN

DETAILS OF CURB ℄ 4" C.I. DRAIN PIPE

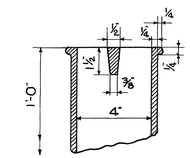


SECTION X-X

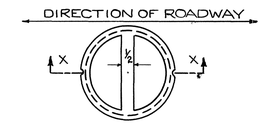


TOP VIEW

## BILL OF STEEL INTERMEDIATE SPAN

| BAR | No | SIZE | LENGTH | BAR | No | SIZE | LENGTH |
|---|---|---|---|---|---|---|---|
| A | 25 | ⅝" ϕ | 31'-4" | F1 | 4 | 1" ϕ | 30'-7" |
| B | 24 | " | 25'-6" | G | 4 | 1" ϕ | 28'-4" |
| C | 24 | ⅝" ϕ | 30'-10" | G1 | 4 | 1" ϕ | 28'-4" |
| D | 29 | ½" ϕ | 28'-0" | N | 54 | ⅝" ϕ | 5'-4" |
| | | | | N1 | 54 | ⅝" ϕ | 5'-6" |
| E | 16 | 1¼" □ | 30'-0" | | | | |
| F | 4 | 1⅛" □ | 30'-9" | P | 4 | ⅝" ϕ | 21'-6" |

NOTE FOR EACH ABUTMENT END ADD 4-⅝" ϕ x 6'-3"
BARS P1, 24-½" ϕ x 2'-3" BARS T, 1-½" ϕ x 23'-6" BAR U

## GENERAL NOTES

SPECIFICATIONS: STANDARD ROAD ℄ BRIDGE SPECIFICATIONS OF THE TENNESSEE DEPT. OF HIGHWAYS ℄ PUBLIC WORKS.
LOADING H 15-44
CONCRETE TO BE CLASS 'A'
REINFORCING STEEL SEE SPECIFICATIONS
FORM ℄ FINISH SEE SPECIFICATIONS
BRONZE: ASTM SPEC B100-44 (EITHER TYPE A OR B) MAY BE USED

## ESTIMATED QUANITITIES

| ITEM | CONCRETE CLASS 'A' CU YDS | STEEL - LB. REINFORC | STEEL - LB. STRUCT | BRONZE LB |
|---|---|---|---|---|
| END SPAN | 36.3 | 7633 | 212 | 176 |
| INTERMEDIATE SPAN | 34 9 | 7555 | 212 | 176 |

NOTE COST OF 4" CAST IRON DRAINS AND ALL JOINT MATERIAL TO BE INCLUDED IN THE UNIT PRICE BID FOR CLASS 'A' CONCRETE.

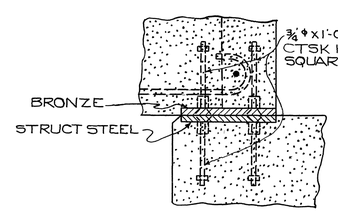


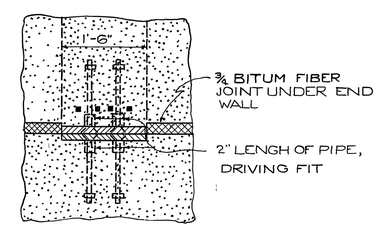


NOTE BOTTOM OF TOP PLATES TO BE FLUSH WITH BOTTOM OF BEAM
TOP OF BOTTOM PLATES TO BE FLUSH WITH BRIDGE SEAT.

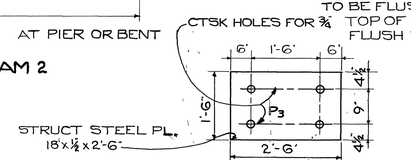


NOTE IF PLATES P3 ARE USED STRUCTURAL STEEL WEIGHT = 395 LBS. (2-SPANS)

STRUCTURAL STEEL PLATES ½" THICK
REQUIRED 8 PLATES P1 - BRONZE
4 PLATES P3 - STEEL

DETAIL OF BEARING PLATES FOR TWO EXPANSION ENDS ON PIER OR BENT

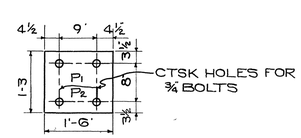


8 PLs 15" x ½ x 1'-6" REQUIRED
4-BRONZE - P1
4-STRUCTURAL STEEL - P2

DETAIL OF EXPANSION END

STATE OF TENNESSEE
DEPARTMENT OF HIGHWAYS AND PUBLIC WORKS
NASHVILLE

STANDARD

# CONCRETE BRIDGE

DECK GIRDER TYPE

26'-0" CLEAR SPAN 24'-0" ROADWAY WITH SAFETY CURBS

1948

CORRECT L. W. Erickson BRIDGE ENGINEER

APPROVED M. Brooks STATE HIGHWAY ENGINEER

E-2-4

DESIGNED BY W.S. DATE Dec. 48
DRAWN BY E.J.V. DATE 12/13/48
TRACED BY W.J.S. DATE 1/5/48
CHECKED BY DATE

| FED ROAD DIST NO | STATE | FED AID PROJ NO | FISCAL YEAR | SHEET NO | TOTAL SHEETS |
|---|---|---|---|---|---|
| 8 | TENN. | | 19 | 9 | 39 |

S-6197-(2)

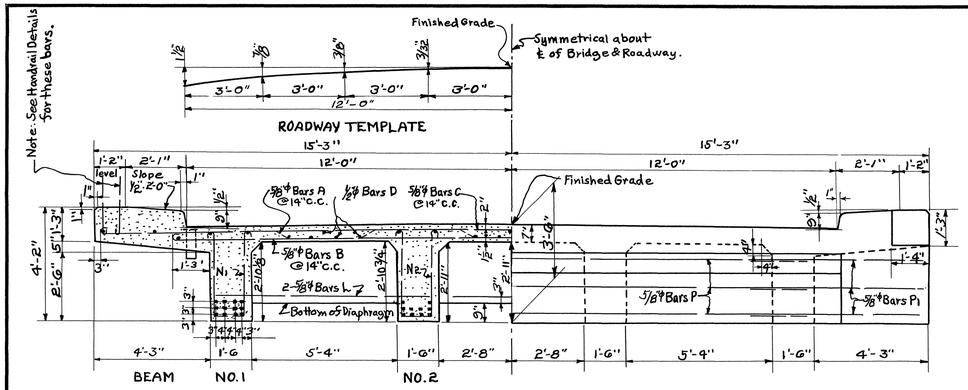


HALF SECTION A-A

HALF END ELEVATION-ABUTMENT END

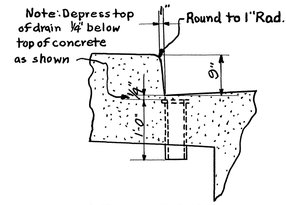


DETAIL OF CURB

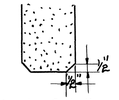

Note: chamfer bottom corners of all beams ½" as shown.

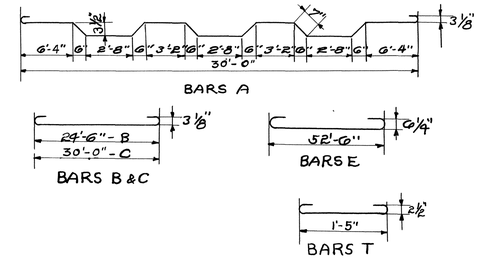


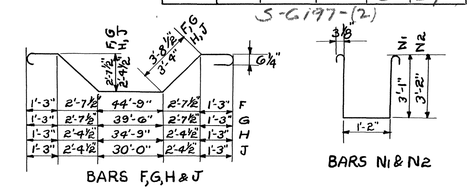


## BILL OF STEEL
### ONE INTERMEDIATE SPAN

| BAR | NO | SIZE | LENGTH | BAR | NO | SIZE | LENGTH |
|---|---|---|---|---|---|---|---|
| A | 45 | ⅝"φ | 31'-6" | J | 4 | 1¼"□ | 41'-2" |
| B | 44 | " | 25'-6" | | | | |
| C | 46 | ⅝"φ | 31'-0" | L | 2 | ⅝"φ | 21'-6" |
| D | 29 | ½"φ | 52'-6" | | | | |
| | | | | N1 | 60 | ⅝"φ | 8'-4" |
| E | 16 | 1¼"□ | 54'-6" | N2 | 60 | ⅝"φ | 8'-6" |
| F | 8 | " | 56'-10" | | | | |
| G | 8 | " | 51'-7" | P | 7 | ⅝"φ | 21'-6" |
| H | 8 | 1¼"□ | 45'-11" | | | | |

NOTE: For each Abutment End add;
6 - ⅝"φ Bars P1 x 6'-3"
24 - ½"φ Bars T x 2'-3"
1 - ½"φ Bar U x 23'-6"

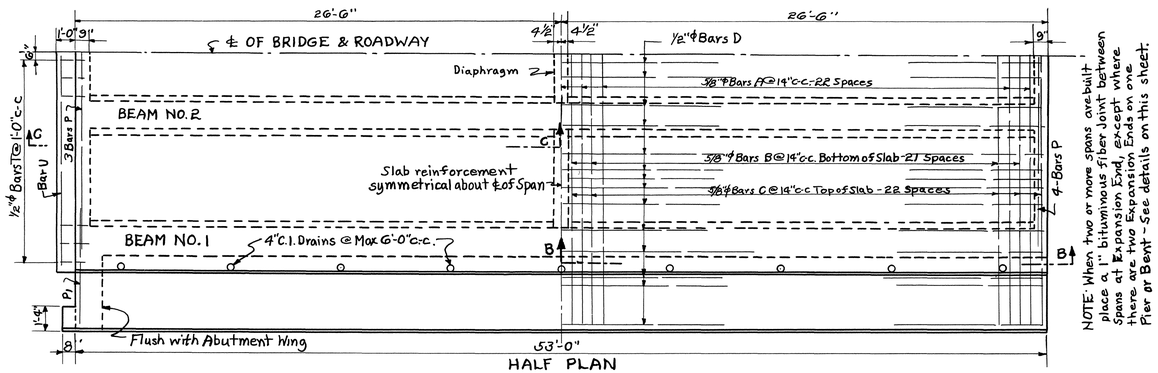


HALF PLAN

NOTE: When two or more spans are built place a 1" bituminous fiber joint between spans at Expansion End, except where there are two Expansion Ends on one Pier or Bent - See details on this sheet.

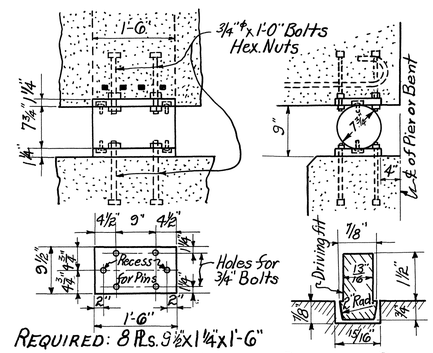


REQUIRED: 8 Pls. 9½" x 1¼" x 1'-6"

NOTE: Plates to be Cast or Structural Steel. Rollers to be forged and annealed.

DETAIL OF PIN

DETAILS OF ROLLER BEARINGS

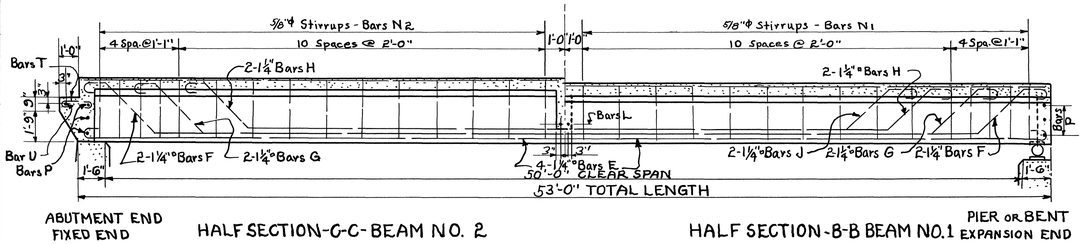


HALF SECTION-C-C-BEAM NO. 2

HALF SECTION-B-B BEAM NO.1

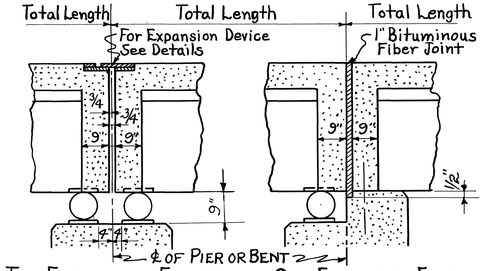


TWO EXPANSION ENDS

ONE EXPANSION END ONE FIXED END

ON PIER OR BENT

## ESTIMATED QUANTITIES

| ITEM | CONCRETE CLASS A CU. YDS. | STEEL LB REINFORC | STEEL LB STRUCT* | FORGINGS LB. |
|---|---|---|---|---|
| END SPAN | 86.9 | 18549 | 541 | 966 |
| INTERMEDIATE SPAN | 84.1 | 18457 | 541 | 966 |

NOTE: Cost of 4" Cast Iron Drains and all Joint material to be included in the Unit Price Bid for CLA. Concrete.

* Weight of Expansion Device E1-E3 NOT included in above structural steel quantities.

## GENERAL NOTES

SPECIFICATIONS: Standard Road & Bridge Specifications of the Tennessee Department of Highways & Public Works.
LOADING: H 15-44.
CONCRETE to be Class "A".
REINFORCING STEEL: See Specifications.
FORMS & FINISH: See Specifications.

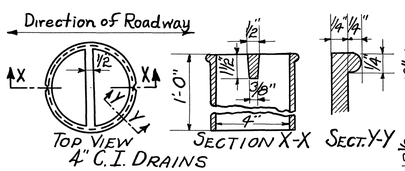


4" C.I. DRAINS
18 Required per span.

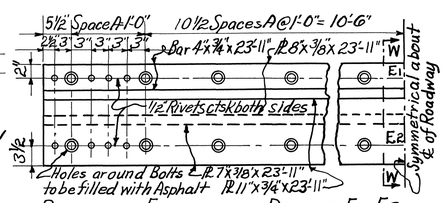


ROADWAY EXPANSION DEVICE E1-E2

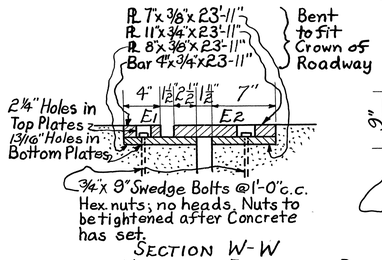


SECTION W-W

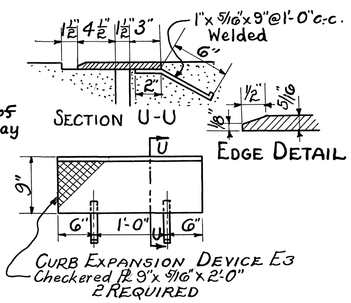


WEIGHT OF EXPANSION DEVICES E1-E2-E3, 1433 LBS. OF STRUCTURAL STEEL

DETAILS OF EXPANSION DEVICES E1, E2 & E3 FOR TWO EXPANSION ENDS ON PIER OR BENT

STATE OF TENNESSEE
DEPARTMENT OF HIGHWAYS AND PUBLIC WORKS
NASHVILLE

STANDARD
# CONCRETE BRIDGE
DECK GIRDER TYPE
SPAN 50'-0" ROADWAY 24'-0"
WITH SAFETY CURBS
1948

CORRECT L. H. Erickson BRIDGE ENGINEER
APPROVED S. E. Squires STATE HIGHWAY ENGINEER

E-2-5

DESIGNED BY ____ DATE ____
DRAWN BY W.S. DATE 12-8-48
TRACED BY L.D. Allen DATE 2-28-49
CHECKED BY ____ DATE ____

REVISED 11/5/51 - ROADWAY AT BASE OF CURB

| FED. ROAD DIST. NO. | STATE | FED. AID PROJ. NO. | FISCAL YEAR | SHEET NO. | TOTAL SHEETS |
|---|---|---|---|---|---|
| 8 | TENN. | | 19 | | |

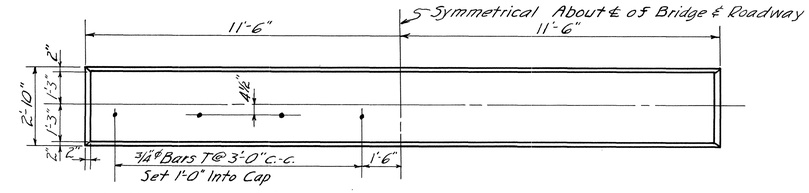


ONE EXPANSION END & ONE FIXED END  TWO EXPANSION ENDS

## PLAN OF CAP

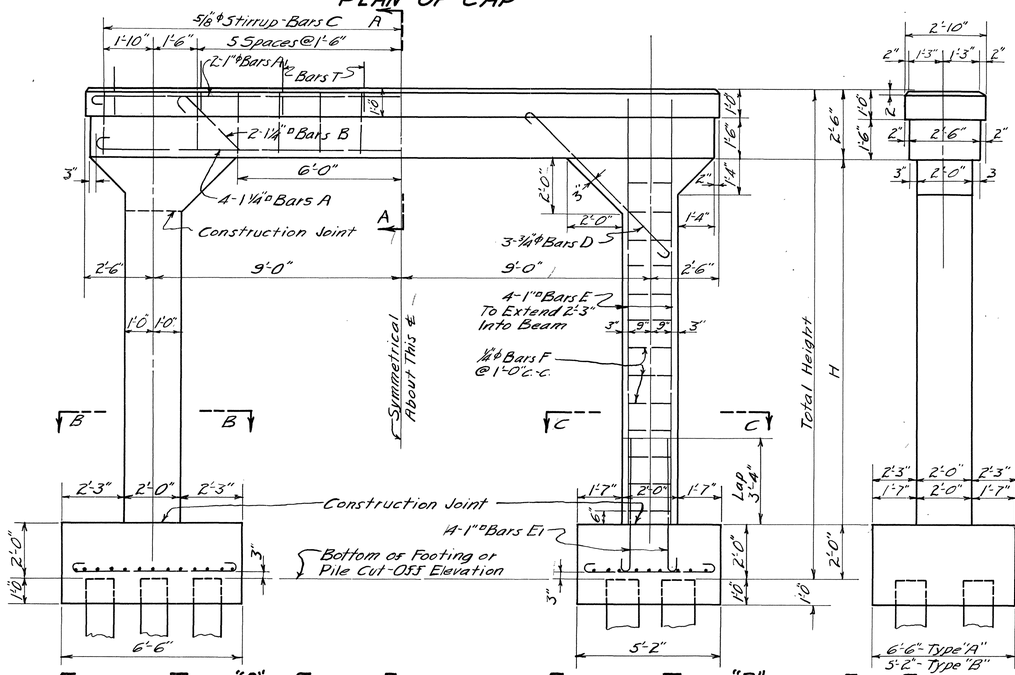


FOOTING TYPE "A"  FRONT ELEVATION  FOOTING TYPE "B"  END ELEVATION

MAX. FOUNDATION PRESSURE 4100 #/□'  MAX. FOUNDATION PRESSURE 6400 #/□'

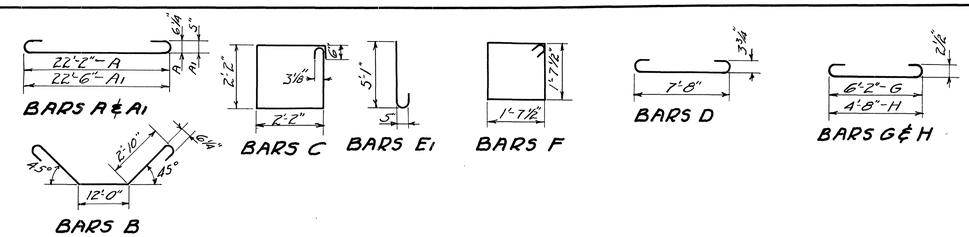


## GENERAL NOTES:

Specifications: Standard Road & Bridge Specifications of the Tennessee Department of Highways & Public Works.
Concrete: To Be Class "A".
Reinforcing Steel: See Specifications.
Forms & Finish: See Specifications.
Rock Foundation: See Specifications.

## BILL OF STEEL

CONSTANT FOR ALL HEIGHTS

| TYPE "A"-FOOTING | | | | TYPE "B"-FOOTING | | | |
|---|---|---|---|---|---|---|---|
| Bar | No. | Size | Length | Bar | No. | Size | Length |
| A | 4 | 1¼"□ | 24'-2" | A | 4 | 1¼"□ | 24'-2" |
| A1 | 2 | 1"φ | 24'-2" | A1 | 2 | 1"φ | 24'-2" |
| B | 2 | 1¼"□ | 19'-8" | B | 2 | 1¼"□ | 19'-8" |
| C | 13 | ⅝"φ | 9'-8" | C | 13 | ⅝"φ | 9'-8" |
| D | 6 | ¾"φ | 9'-0" | D | 6 | ¾"φ | 9'-0" |
| E1 | 8 | 1"□ | 5'-11" | E1 | 8 | 1"□ | 5'-11" |
| | | | | | | | |
| G | 52 | ½"φ | 7'-0" | H | 40 | ½"φ | 5'-6" |

NOTE: Weight of Bars Listed Above Is Included In Table of Dimensions And Estimated Quantities

## DIMENSIONS AND ESTIMATED QUANTITIES

| Total Height | H | Reinforcement Bars E 8-1"□ Length | Reinforcement Bars E 8-1"□ No. | Type "A" Footing Conc. Class "A" Cu. Yds. | Type "A" Footing Reinfor. Steel Lb. | Type "B" Footing Conc. Class "A" Cu. Yds. | Type "B" Footing Reinfor. Steel Lb. |
|---|---|---|---|---|---|---|---|
| 12'-0" | 7'-6" | 9'-9" | 14 | 14.4 | 1750 | 12.1 | 1653 |
| 13'-0" | 8'-6" | 10'-9" | 16 | 14.7 | 1779 | 12.4 | 1683 |
| 14'-0" | 9'-6" | 11'-9" | 18 | 15.0 | 1809 | 12.7 | 1712 |
| 15'-0" | 10'-6 | 12'-9" | 20 | 15.3 | 1838 | 13.0 | 1742 |
| 16'-0" | 11'-6 | 13'-9" | 22 | 15.6 | 1868 | 13.3 | 1771 |
| 17'-0" | 12'-6" | 14'-9" | 24 | 15.9 | 1897 | 13.6 | 1801 |
| 18'-0" | 13'-6" | 15'-9" | 26 | 16.2 | 1927 | 13.9 | 1831 |
| 19'-0" | 14'-6" | 16'-9" | 28 | 16.5 | 1957 | 14.2 | 1860 |
| 20'-0" | 15'-6" | 17'-9" | 30 | 16.8 | 1986 | 14.5 | 1890 |
| 21'-0" | 16'-6" | 18'-9" | 32 | 17.1 | 2016 | 14.8 | 1919 |
| 22'-0" | 17'-6" | 19'-9" | 34 | 17.4 | 2045 | 15.1 | 1949 |
| 23'-0" | 18'-6" | 20'-9" | 36 | 17.7 | 2075 | 15.4 | 1978 |
| 24'-0" | 19'-6 | 21'-9" | 38 | 18.0 | 2105 | 15.7 | 2008 |
| 25'-0" | 20'-6" | 22'-9" | 40 | 18.3 | 2134 | 16.0 | 2038 |
| 26'-0" | 21'-6" | 23'-9" | 42 | 18.6 | 2164 | 16.3 | 2067 |
| 27'-0" | 22'-6" | 24'-9" | 44 | 18.9 | 2193 | 16.6 | 2097 |
| 28'-0" | 23'-6" | 25'-9" | 46 | 19.2 | 2223 | 16.9 | 2126 |
| 29'-0" | 24'-6" | 26'-9" | 48 | 19.5 | 2252 | 17.2 | 2156 |
| 30'-0" | 25'-6" | 27'-9" | 50 | 19.8 | 2282 | 17.5 | 2186 |
| 31'-0" | 26'-6 | 28'-9" | 52 | 20.1 | 2312 | 17.8 | 2215 |
| 32'-0" | 27'-6" | 29'-9" | 54 | 20.4 | 2341 | 18.1 | 2245 |
| 33'-0 | 28'-6" | 30'-9" | 56 | 20.7 | 2371 | 18.4 | 2274 |
| 34'-0" | 29'-6" | 31'-9" | 58 | 21.0 | 2400 | 18.7 | 2204 |
| 35'-0" | 30'-6" | 32'-9" | 60 | 21.3 | 2430 | 19.0 | 2333 |
| 36'-0" | 31'-6" | 33'-9" | 62 | 21.6 | 2459 | 19.3 | 2363 |
| 37'-0" | 32'-6" | 34'-9" | 64 | 21.8 | 2489 | 19.5 | 2393 |
| 38'-0" | 33'-6" | 35'-9" | 66 | 22.1 | 2519 | 19.8 | 2422 |
| 39'-0" | 34'-6" | 36'-9" | 68 | 22.4 | 2548 | 20.1 | 2452 |
| 40'-0" | 35'-6" | 37'-9" | 70 | 22.7 | 2578 | 20.4 | 2481 |
| 41'-0" | 36'-6" | 38'-9" | 72 | 23.0 | 2607 | 20.7 | 2511 |
| 42'-0" | 37'-6" | 39'-9" | 74 | 23.3 | 2637 | 21.0 | 2540 |
| 43'-0" | 38'-6" | 40'-9" | 76 | 23.6 | 2667 | 21.3 | 2570 |
| 44'-0" | 39'-6" | 41'-9" | 78 | 23.9 | 2696 | 21.6 | 2600 |
| 45'-0" | 40'-6" | 42'-9" | 80 | 24.2 | 2726 | 21.9 | 2629 |

NOTE: For Each Fixed End Add 8-¾"φ Bars T x 2'-0" Long & 2.4 Lb. Of Reinforcing Steel.
When Timber Piles Are Used: Add 2.8 Cu. Yds. Of Class "A" Concrete To Quantities Shown For Type "A" Footing.
When Concrete Piles Are Used: Add 1.6 Cu. Yds. Of Class "A" Concrete To Quantities Shown For Type "B" Footing.

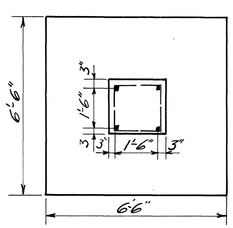


SECTION B-B

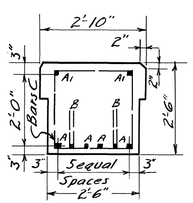


SECTION A-A

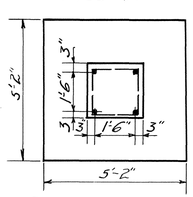


SECTION C-C

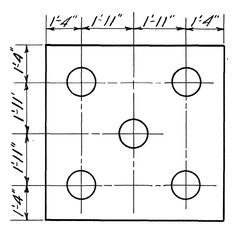


PILE PLAN-TYPE "A" FOOTING TIMBER PILES

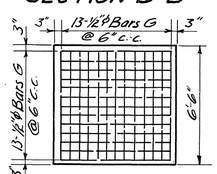


REINFORCEMENT IN FOOTING

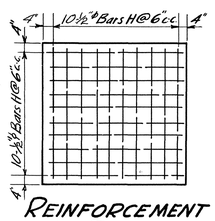


REINFORCEMENT IN FOOTING

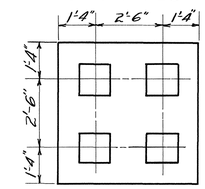


PILE PLAN-TYPE "B" FOOTING CONCRETE PILES

STATE OF TENNESSEE
DEPARTMENT OF HIGHWAYS AND PUBLIC WORKS
NASHVILLE

# STANDARD CONCRETE BENTS

TOTAL HEIGHT 12' TO 45'  24'-0" ROADWAY

FOR 26'-0" CLEAR SPANS

1948

CORRECT Fred Gunn BRIDGE ENGINEER

APPROVED Herbert M. Bates STATE HIGHWAY ENGINEER

E-2-10

DESIGNED BY _____ DATE _____
DRAWN BY _____ DATE _____
RETRACED BY C.D.W. DATE 4-23-58
CHECKED BY _____ DATE _____

Revised 4-29-58, Bearing Plates Removed

MICROFILMED

| FED. ROAD DIST. NO. | STATE | FED. AID PROJ. NO. | FISCAL YEAR | SHEET NO. | TOTAL SHEETS |
|---|---|---|---|---|---|
| 8 | TENN. | | 19 | 19 | 30 |

5-050-1-(1)

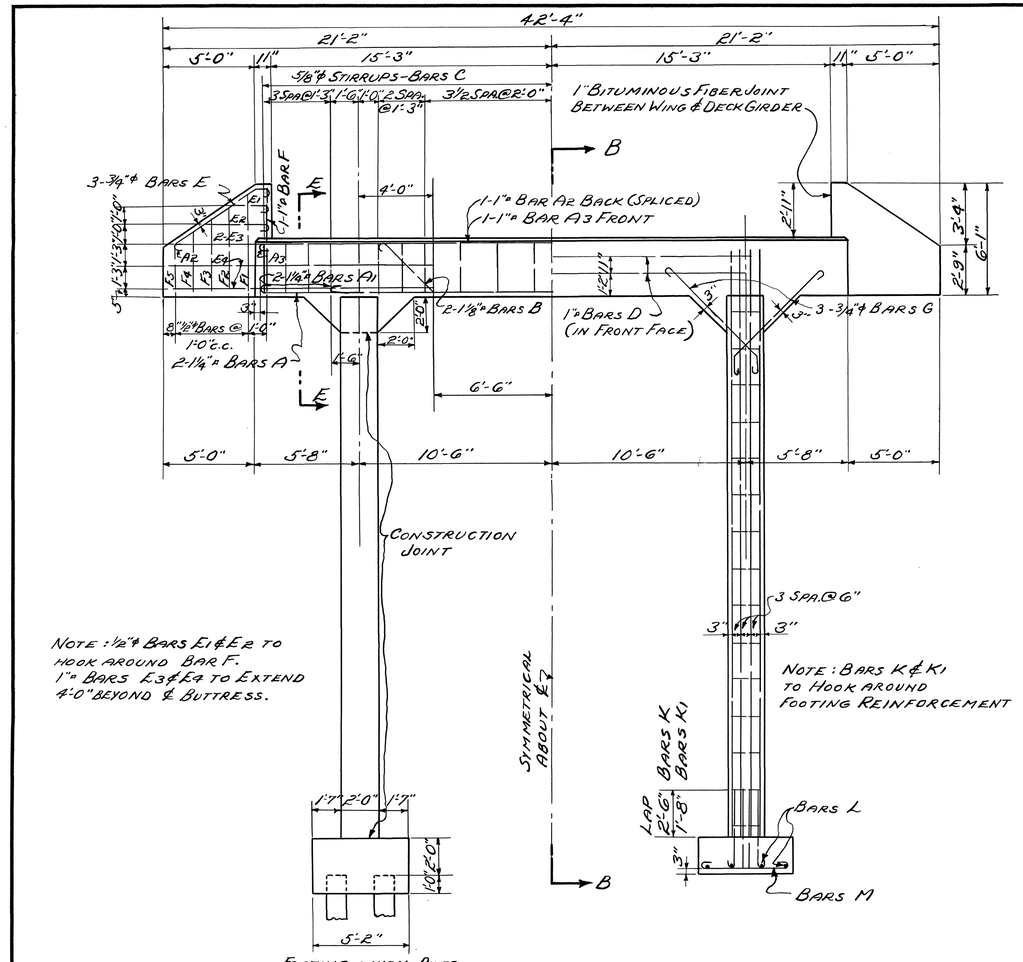


FRONT ELEVATION

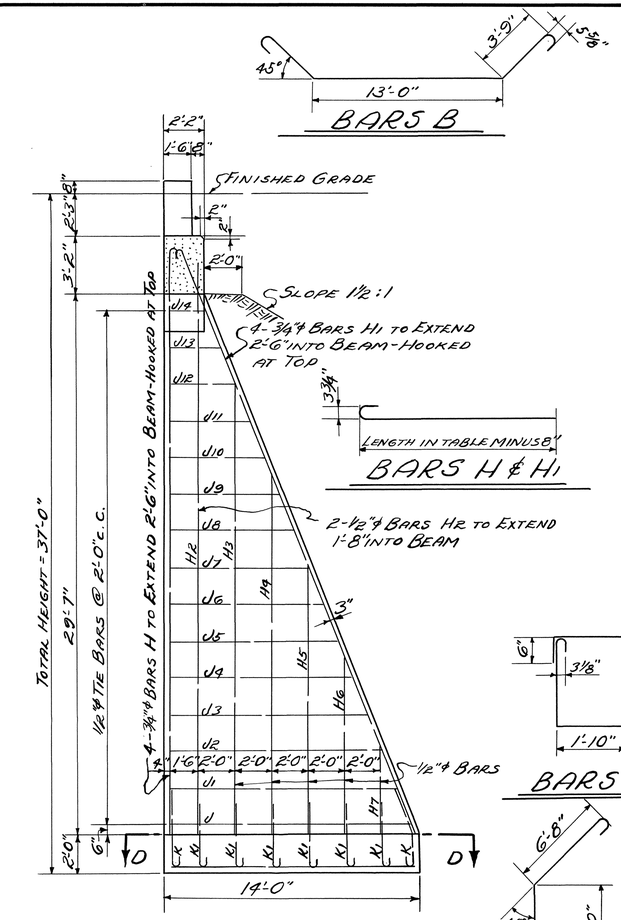


SECTION B-B

BUTTRESS FOR CONCRETE PILES
MAX. FOUNDATION PRESSURE 8000#/SQ.FT.

## BILL OF STEEL

| BAR | No. | SIZE | LENGTH | BAR | No. | SIZE | LENGTH | BAR | No. | SIZE | LENGTH |
|---|---|---|---|---|---|---|---|---|---|---|---|
| A | 2 | 1 1/8"□ | 33'-10" | F5 | 2 | 1/2"ϕ | 2'-9" | J5 | 2 | 1/2"ϕ | 23'-5" |
| A1 | 2 | 1 1/8"□ | 26'-0" | | | | | J6 | 2 | " | 21'-10" |
| A2 | 2 | 1"□ | 23'-0" | G | 12 | 3/4"ϕ | 9'-0" | J7 | 2 | " | 20'-3" |
| A3 | 1 | 1"□ | 33'-6" | | | | | J8 | 2 | " | 18'-8" |
| | | | | | | | | J9 | 2 | " | 17'-0" |
| B | 2 | 1 1/8"□ | 22'-4" | | | | | J10 | 2 | " | 15'-5" |
| C | 20 | 5/8"ϕ | 10'-4" | H | 8 | 3/4"ϕ | 32'-9" | J11 | 2 | " | 13'-10" |
| D | 2 | 1"□ | 21'-0" | H1 | 8 | 3/4"ϕ | 35'-0" | J12 | 2 | " | 12'-3" |
| | | | | H2 | 4 | 1/2"ϕ | 31'-3" | J13 | 2 | " | 10'-8" |
| E | 6 | 3/4"ϕ | 7'-0" | H3 | 4 | " | 24'-9" | J14 | 2 | 1/2"ϕ | 9'-0" |
| E1 | 2 | 1/2"ϕ | 2'-3" | H4 | 4 | " | 19'-9" | | | | |
| E2 | 2 | 1/2"ϕ | 3'-9" | H5 | 4 | " | 14'-9" | K | 16 | 3/4"ϕ | 4'-11" |
| E3 | 4 | 1"□ | 13'-9" | H6 | 4 | " | 9'-9" | K1 | 24 | 1/2"ϕ | 3'-10" |
| E4 | 4 | 1"□ | 14'-6" | H7 | 4 | 1/2"ϕ | 4'-9" | | | | |
| | | | | | | | | L | 8 | 1/2"ϕ | 13'-6" |
| F | 2 | 1"□ | 5'-6" | J | 2 | 1/2"ϕ | 31'-5" | | | | |
| F1 | 2 | 1/2"ϕ | 5'-3" | J1 | 2 | " | 29'-10" | M | 56 | 1/2"ϕ | 5'-6" |
| F2 | 2 | 1/2"ϕ | 4'-9" | J2 | 2 | " | 28'-3" | | | | |
| F3 | 2 | " | 4'-0" | J3 | 2 | " | 26'-8" | T | 10 | 3/4"ϕ | 2'-0" |
| F4 | 2 | 1/2"ϕ | 3'-3" | J4 | 2 | 1/2"ϕ | 25'-0" | | | | |

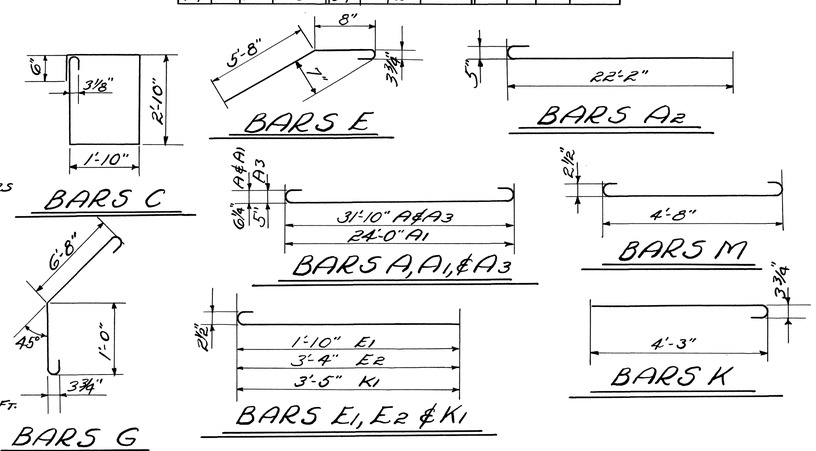


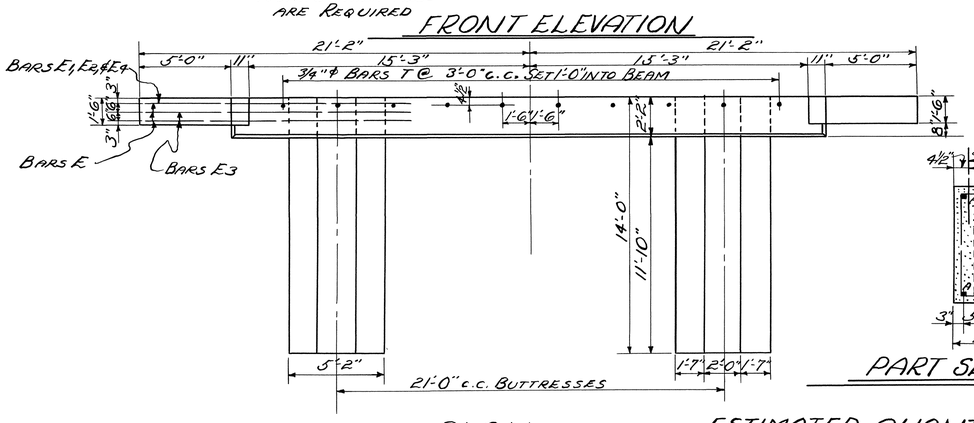


PLAN

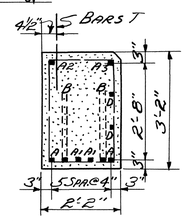


PART SECTION B-B

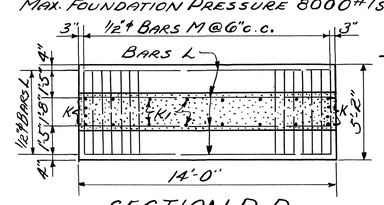


SECTION D-D

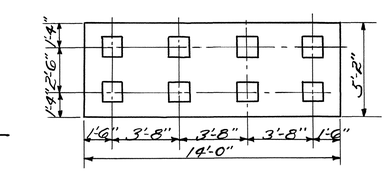


PILE PLAN-CONCRETE PILES

LOAD PER PILE 25 TONS

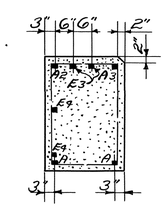


SECTION E-E

## GENERAL NOTES

SPECIFICATIONS: STANDARD ROAD & BRIDGE SPECIFICATIONS OF THE TENNESSEE DEPARTMENT OF HIGHWAYS & PUBLIC WORKS.
CONCRETE: TO BE CLASS "A".
REINFORCING STEEL: SEE SPECIFICATIONS.
FORMS & FINISH: SEE SPECIFICATIONS.
ROCK FOUNDATION: SEE SPECIFICATIONS.

## ESTIMATED QUANTITIES

CLASS "A" CONCRETE: WITHOUT PILES 57.8 CU.YDS.
WITH PILES 62.3 CU.YDS.
REINFORCING STEEL: 4,131 LBS.

STATE OF TENNESSEE
DEPARTMENT OF HIGHWAYS AND PUBLIC WORKS
NASHVILLE

STANDARD

# CONCRETE ABUTMENT

OPEN TYPE

24'-0" ROADWAY WITH SAFETY CURBS
TOTAL HEIGHT 37'-0"
26'-0" CLEAR SPAN
SKEW 90°
1949

CORRECT: L. V. Erickson, BRIDGE ENGINEER
APPROVED: S. Fn Squires, STATE HIGHWAY ENGINEER

E-2-54

DESIGNED BY _____ DATE _____
DRAWN BY Abbott DATE 3-26-49
TRACED BY Allen DATE 3-30-49
CHECKED BY _____ DATE _____

MICROFILMED

| FED ROAD DIST NO | STATE | FED AID PROJ NO | FISCAL YEAR | SHEET NO | TOTAL SHEETS |
|---|---|---|---|---|---|
| 8 | TENN. | | 19 | 6 | 15 |

F-C13-1-(8)

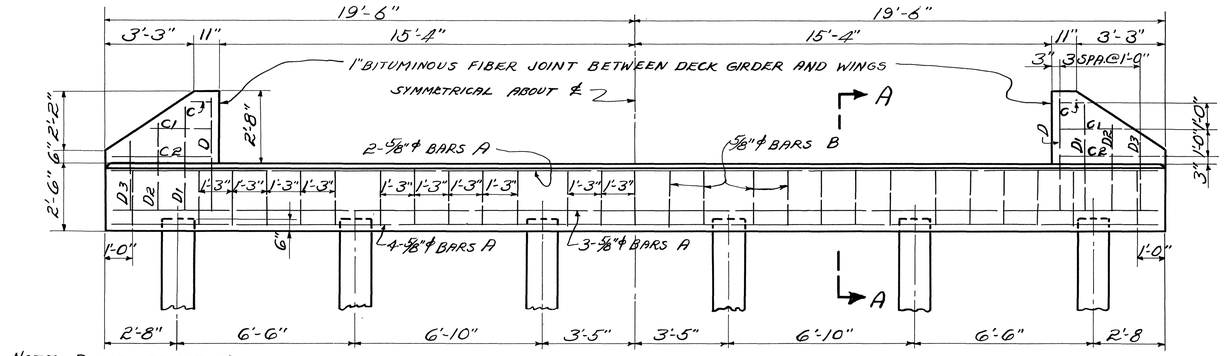


NOTE - D-BARS TO EXTEND 1'-8" INTO BEAM

FRONT ELEVATION

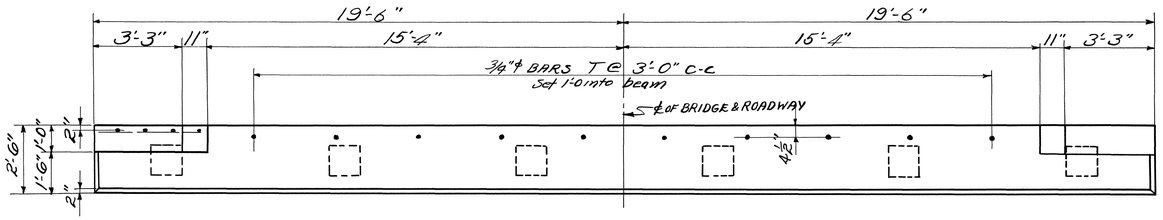


PLAN

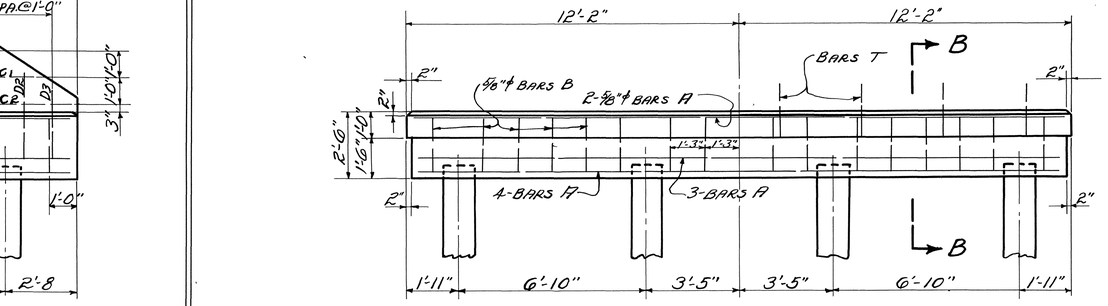


ELEVATION

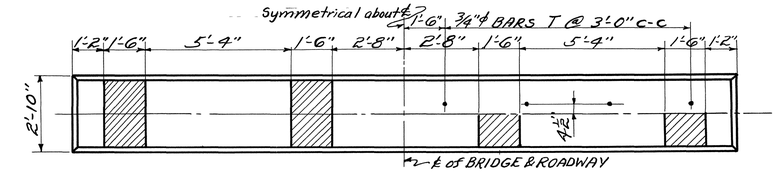


HALF PLAN - TWO EXPANSION ENDS  HALF PLAN - ONE EXPANSION END

NOTE: WHEN POURING BENT CAP, PROVISIONS SHALL BE MADE FOR SETTING BOLTS FOR BEARING PLATES, LOCATION OF WHICH IS SHOWN ON THIS SHEET.

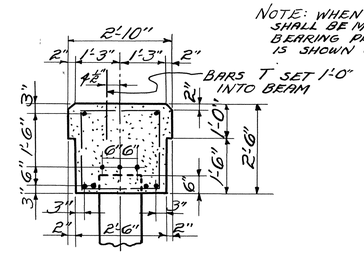


SECTION B-B

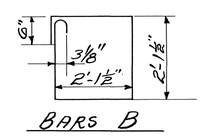

BARS B

PILE BENT

BILL OF STEEL

| BAR | No. | SIZE | LENGTH |
|---|---|---|---|
| A | 9 | 5/8"ϕ | 23'-6" |
| B | 17 | 5/8"ϕ | 9'-6" |

NOTE: FOR EACH FIXED END, ADD 8-3/4"ϕ BARS T x 2'-0" AND 24 LBS. STEEL.

ESTIMATED QUANTITIES

| | | |
|---|---|---|
| CONCRETE CLASS "A" | 5.8 | CU. YDS. |
| REINFORCING STEEL | 388 | LBS. |

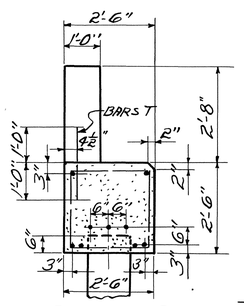


SECTION A-A

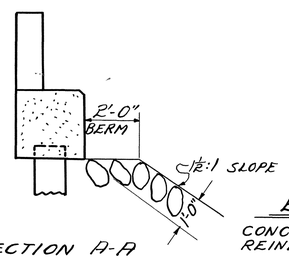


SECTION A-A
SHOWING RIP-RAP

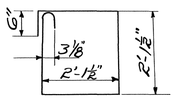


BARS B

ESTIMATED QUANTITIES

| | | |
|---|---|---|
| CONCRETE CLASS "A" | 9.4 | CU. YDS. |
| REINFORCING STEEL | 683 | LBS. |

BILL OF STEEL

| BAR | No. | SIZE | LENGTH |
|---|---|---|---|
| A | 9 | 5/8"ϕ | 38'-4" |
| B | 27 | 5/8"ϕ | 9'-6" |
| | | | |
| C | 2 | 1/2"ϕ | 0'-9" |
| C1 | 2 | " | 2'-3" |
| C2 | 2 | 1/2"ϕ | 3'-9" |
| | | | |
| D | 2 | 1/2"ϕ | 4'-3" |
| D1 | 2 | " | 3'-9" |
| D2 | 2 | " | 3'-3" |
| D3 | 2 | 1/2"ϕ | 2'-6" |
| | | | |
| T | 10 | 3/4"ϕ | 2'-0" |

PILE BENT ABUTMENT

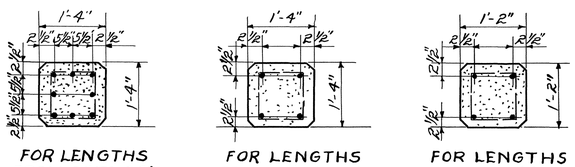


FOR LENGTHS FROM 51' TO 60'  FOR LENGTHS FROM 41' TO 50'  FOR LENGTHS UP TO 40'

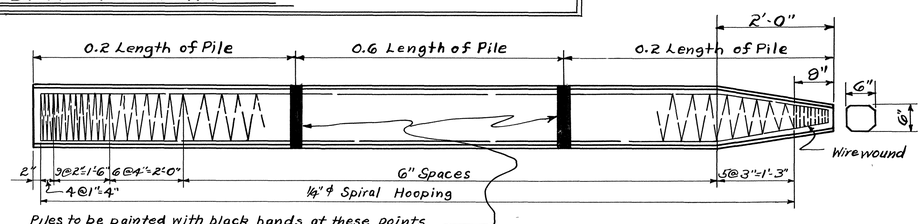


Piles to be painted with black bands at these points, to indicate proper place for attaching handling line.

DETAIL OF PRECAST CONCRETE PILE

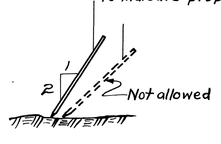


Note. In handling the piles, they shall be supported at the points indicated. Piles to be picked up by pulling on both lines uniformly. End of pile not to touch ground, unless pile is inclined 1:2 or steeper.

TABLE FOR DIFFERENT PILE LENGTHS

| LENGTH OF PILE | LONGITUDINAL REINFORC. | WEIGHT OF STEEL PER FT. | WEIGHT OF PILE PER FT. |
|---|---|---|---|
| Up to 35' | 4 - 7/8"ϕ Bars | 9.6 Lbs. | 205.3 Lbs. |
| 36' " 40' | 4 - 1"ϕ " | 12.2 " | 205.3 " |
| 41' " 45' | 4 - 1"ϕ " | 15.1 " | 265.3 " |
| 46' " 50' | 4 - 1 1/8"ϕ " | 18.8 " | 265.3 " |
| 51' " 55' | 8 - 1"ϕ " | 28.9 " | 265.3 " |
| 56' to 60' | 8 - 1 1/8"ϕ Bars | 36.2 Lbs. | 265.3 Lbs. |

GENERAL NOTES

Specifications: Standard Road and Bridge Specifications of the Tennessee Department of Highways and Public Works.
Concrete in Abutment and Bent Cap to be Class "A", in Piles to be Class "S" with Class "A" aggregate.
Reinforcing Steel: See Specifications.
Forms and Finish: See Specifications.
Rip Rap: See Specifications.
Piles Cracked during curing, handling or driving will not be accepted.
Loading: H15-44

STATE OF TENNESSEE
DEPARTMENT OF HIGHWAYS AND PUBLIC WORKS
NASHVILLE

STANDARD CONCRETE
# BENT AND ABUTMENT
PILE BENT TYPE

24'-0" ROADWAY WITH SAFETY CURBS  SPAN 26'-0"  SKEW 90°

1949

CORRECT L. N. Erickson BRIDGE ENGINEER

APPROVED S. M. Squires STATE HIGHWAY ENGINEER

E-2-56

| | | | |
|---|---|---|---|
| DESIGNED BY | | DATE | |
| DRAWN BY | R.C. | DATE | 3-24-49 |
| TRACED BY | L.D.A. | DATE | 4-5-49 |
| CHECKED BY | | DATE | |

MICROFILMED

| TYPE | YEAR | PROJECT NO. | SHEET NO. |
|---|---|---|---|
| | 2014 | BR-STP-50(29) | 2 |

PIN: 105351.00.
CONST. NO. 41056-3217-94

HICKMAN COUNTY

| ALTERNATE "A" | ALTERNATE "B" | |
|---|---|---|
| X081 | X081 | |
| STATE ROUTE 50<br>OVER<br>DUCK RIVER<br>STA. 37+10.00<br>LOG MILE 14.04<br><br>CONTINUOUS PRECAST<br>PRESTRESSED<br>CONCRETE BULB-TEE<br>WITH CONCRETE DECK SLAB<br><br>9 SPAN BRIDGE<br>SPAN NO. 1 = 135'-9"<br>SPAN NO. 2 = 135'-0"<br>SPAN NO. 3 = 135'-0"<br>SPAN NO. 4 = 135'-0"<br>SPAN NO. 5 = 135'-0"<br>SPAN NO. 6 = 135'-0"<br>SPAN NO. 7 = 135'-0"<br>SPAN NO. 8 = 150'-0"<br>SPAN NO. 9 = 100'-0"<br>TOTAL LENGTH = 1,195'-9"<br><br>40'-0" ROADWAY WITH<br>STD-1-1SS BRIDGE RAIL<br><br>90° SKEW<br><br>LAYOUT DWG. NO. U-52-1 | STATE ROUTE 50<br>OVER<br>DUCK RIVER<br>STA. 37+10.00<br>LOG MILE 14.04<br><br>CONTINUOUS PRECAST<br>PRESTRESSED<br>CONCRETE BULB-TEE<br>WITH CONCRETE DECK SLAB<br><br>9 SPAN BRIDGE<br>SPAN NO. 1 = 135'-9"<br>SPAN NO. 2 = 135'-0"<br>SPAN NO. 3 = 135'-0"<br>SPAN NO. 4 = 135'-0"<br>SPAN NO. 5 = 135'-0"<br>SPAN NO. 6 = 135'-0"<br>SPAN NO. 7 = 135'-0"<br>SPAN NO. 8 = 150'-0"<br>SPAN NO. 9 = 100'-0"<br>TOTAL LENGTH = 1,195'-9"<br><br>40'-0" ROADWAY WITH<br>STD-1-1SS BRIDGE RAIL<br><br>90° SKEW<br><br>LAYOUT DWG. NO. U-52-2 | RETAINING WALL NO. 1<br>STATE ROUTE 50<br>STA. 42+90.00<br>LENGTH = 115'-2 5/16"<br><br>DWG. NO. U-52-21A |

## ESTIMATED QUANTITIES

| ITEM NO. | DESCRIPTION | QUANTITIES | QUANTITIES | | UNIT |
|---|---|---|---|---|---|
| 202-04.01 | REMOVAL OF STRUCTURES (EXIST. BR. NO. 41-SR050-14.04) | 1 | 1 | | L.S. |
| 204-02.01 | DRY EXCAVATION (BRIDGES) | 1,518 | 240 | | C.Y. |
| 204-02.30 | DRILLED CAISSON - UNCLASSIFIED (2'-0" DIAMETER) | 75 | 75 | | L.F. |
| 204-04.01 | ROCK EXCAVATION (BRIDGES) | 7 | | | C.Y. |
| 204-05 | ROCK DRILLING (BRIDGES) | 30 | | | L.F. |
| 303-01.02 | GRANULAR BACKFILL (BRIDGES) | 32 | 32 | | TON |
| 604-02.03 | EPOXY COATED REINFORCING STEEL | 477,799 | 477,799 | | LB. |
| 604-03.01 | CLASS 'A' CONCRETE (BRIDGES) | 1,048 | 700 | | C.Y. |
| 604-03.02 | STEEL BAR REINFORCEMENT (BRIDGES) | 220,433 | 242,700 | | LB. |
| 604-03.04 | PAVEMENT AT BRIDGE ENDS | 204 | 204 | | S.Y. |
| 604-03.09 | CLASS 'D' CONCRETE (BRIDGE DECK) | 1,451 | 1,451 | | C.Y. |
| 604-04.01 | APPLIED TEXTURE FINISH (NEW STRUCTURES) | 6,575 | 6,575 | | S.Y. |
| 604-05.31 | BRIDGE DECK GROOVING (MECHANICAL) | 5,090 | 5,090 | | S.Y. |
| 604-07.01 | RETAINING WALL | | | 1,615 | S.F. |
| 606-02.03 | STEEL PILES (10 INCH) | 563 | 563 | | L.F. |
| 606-02.06 | PILE TIPS (STEEL PILES, 10 INCH) | 30 | 30 | | EA. |
| 606-03.03 | STEEL PILES (12 INCH) | 3,452 | | | L.F. |
| 606-03.06 | PILE TIPS (STEEL PILES, 12 INCH) | 200 | | | EA. |
| 610-10.45 | DECK DRAINS (GRATE TYPE 1) | 12 | 12 | | EA. |
| 615-01.12 | PRESTRESSED CONCRETE BULB TEE BEAM (6" WEB)(BT-72) | 5,904 | 5,904 | | L.F. |
| 617-02 | BRIDGE DECK CRACK SEALING | 1,196 | 1,196 | | L.F. |
| 620-05.01 | CONCRETE PARAPET SINGLE SLOPE (STD-1-1SS) | 2,466 | 2,466 | | L.F. |
| 625-02.01 | DRILLED SHAFT - SOIL (5'-0" DIA.) | 18 | 353 | | V.F. |
| 625-02.13 | DRILLED SHAFT - ROCK (5'-0" DIA.) | 82 | 250 | | V.F. |
| 625-02.25 | DRILLED SHAFT CASING - PERMANENT (5'-0" DIA.) | 79 | 79 | | V.F. |
| 625-02.40 | DRILLED SHAFT CONCRETE | 98 | 462 | | C.Y. |
| 625-02.46 | SONIC LOGGING TESTING | 4 | 16 | | EACH |
| 710-09.01 | 6" PERFORATED PIPE WITH VERTICAL DRAIN SYSTEM | 140 | 140 | | L.F. |
| 710-09.02 | 6" PIPE UNDERDRAIN | 40 | 40 | | L.F. |

## LIST OF DRAWINGS

| TITLE | DWG. NO. | LAST REV. DATE |
|---|---|---|
| LAYOUT OF BRIDGE THRU BILL OF STEEL | U-52-1 | ---- |
| | U-52-44 | ---- |

## LIST OF STANDARD DRAWINGS

| | DWG. NO. | LATEST REV. DATE |
|---|---|---|
| BRIDGE RAILING SINGLE SLOPE CONCRETE PARAPET | STD-1-1SS | 6-01-11 |
| BRIDGE DECK DRAIN DETAILS | STD-1-2SS | |
| PAVEMENT AT BRIDGE ENDS | STD-1-5 | 6-01-11 |
| BRIDGE END DRAIN DETAILS 2'x8'-7" & 4'x8'-7" WITH PAVEMENT AT BRIDGE ENDS | STD-1-6 | 4-28-97 |
| BRIDGE END DRAIN DETAILS 2'x8'-7" & 4'x8'-7" WITH PAVEMENT AT BRIDGE ENDS | STD-1-7 | 8-24-11 |
| BRIDGE END DRAIN DETAILS 2'x8'-7" WITH PAVEMENT AT BRIDGE ENDS | STD-1-8 | 5-01-95 |
| STD. PRECAST PRESTRESSED BRIDGE DECK PANELS GENERAL DETAILS | STD-4-1 | 04-08-05 |
| STD. PRECAST PRESTRESSED BRIDGE DECK PANELS DESIGN CRITERIA | STD-4-2 | 04-08-05 |
| STD. PRECAST PRESTRESSED BRIDGE DECK PANELS GENERAL DETAILS | STD-4-3 | 03-02-02 |
| STD. PRECAST PRESTRESSED BRIDGE DECK PANELS CONSTRUCTION DETAILS | STD-4-4 | 06-10-96 |
| STANDARD PILE DETAILS | STD-5-1 | 10-25-93 |
| STANDARD PILE DETAILS | STD-5-2 | 4-08-05 |
| STANDARD SEISMIC DETAILS | STD-6-1 | 11-01-10 |
| STANDARD SEISMIC DETAILS | STD-6-2 | 11-07-94 |
| REINFORCING BAR SUPPORT DETAILS FOR CONCRETE SLAB | STD-9-1 | 10-07-08 |
| MISCELLANEOUS ABUTMENT AND DRAINAGE DETAILS | STD-10-1 | 4-08-05 |
| STANDARD DETAILS AND INT. DIAPH. FOR BULB-TEE BEAMS | STD-14-1 | 10-15-08 |

## LIST OF SPECIAL PROVISIONS

| | SPECIAL PROVISION NUMBER | LATEST REV. DATE |
|---|---|---|
| REGARDING BRIDGE DECK CRACK SEALING | 604CR | 2-19-96 |
| REGARDING DRILLED SHAFTS | 625 | |
| REGARDING RETAINING WALLS | 624 | 8-6-12 |

## LIST OF REFERENCE DRAWINGS

EXISTING BRIDGE LAYOUT ---- C-13-86
ALSO DWGS. ---- C-10-54, E-2-4, E-2-5, B-6-135, E-2-54, E-2-56, C-13-87, E-2-10, B-10-114, C-13-88

STATE OF TENNESSEE
DEPARTMENT OF TRANSPORTATION

# ESTIMATED BRIDGE QUANTITIES

BY: A. HUNTER

LAY1008A-DGN

Ⓘ DENOTES INTEGRAL.
Ⓕ DENOTES FIXED.
HATCHED AREA TO BE EXCAVATED AND PAID FOR AS A ROADWAY ITEM.

PIN: NO. 105351.00
CONST. NO. 41056-3217-94

| PROJECT NO. | YEAR | SHEET NO. |
|---|---|---|
| BR-STP-50(29) | 2014 | |

REVISIONS

| NO. | DATE | BY | BRIEF DESCRIPTION |
|---|---|---|---|
| | | | |

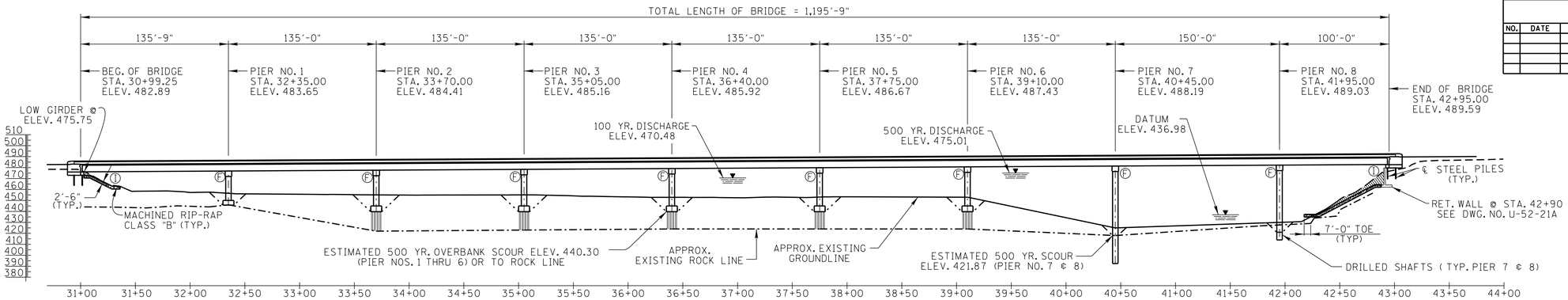


ELEVATION

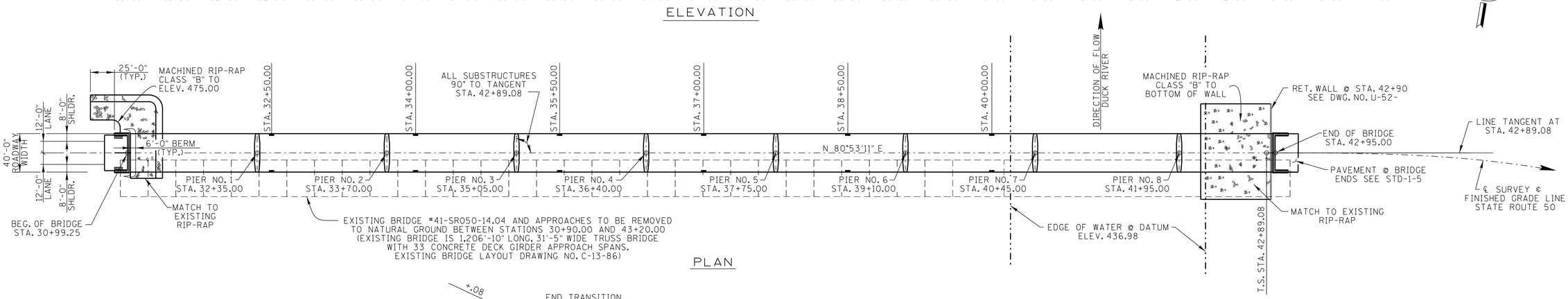


PLAN

## CURVE DATA

(STATE ROUTE 50)
P.I. STA. 48+44.82
N 531,858.6051
E 1,517,810.2762
Δs 52°28'25" (RT)
Δc 31°29'11" (RT)
Dc 6°59'45"
Rc 819.00
Lc 450.07
Ts 555.74
Ls 300.00
θs 10°29'37"
Se 0.080 FT/FT
DESIGN SPEED = 50 mph

## HYDRAULIC DATA

DRAINAGE AREA = 2.070 MI.²
DESIGN DISCHARGE (100 YR.) = 115,000 CFS
WATER AREA PROVIDED BELOW EL. 470.47 = 21,709.01 FT²
100 YR. VELOCITY = 5.30 FPS
100 YR. BRIDGE BACKWATER = 0.08 FT. @ EL. 470.49
ROADWAY OVERTOPPING EL. = 480.81
500 YR. DISCHARGE 146,000 CFS @ EL. 474.97

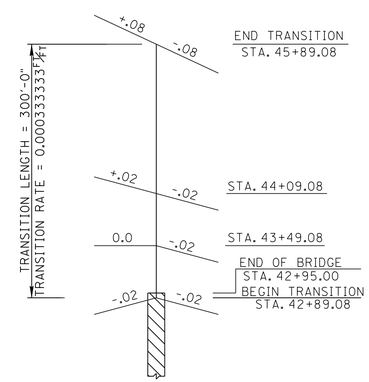


TRANSITION SKETCH

DENOTES: END OF BRIDGE DRAIN REQUIRED. (2'-0" x 8'-7") (SEE STANDARD DRAWING NO. STD-1-6, STD-1-7 & STD-1-8)

DENOTES: DECK DRAINS (GRATE TYPE 1) ARE REQUIRED AS SHOWN. (SEE STANDARD DRAWING NO. STD-1-2SS).

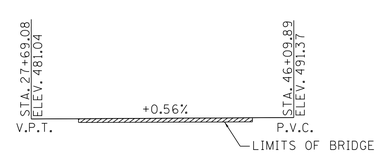


GRADE SKETCH
(STATE ROUTE 50)
N.T.S.

2029 ADT = 3,200
40'-0" ROADWAY WITH STD-1-1SS PARAPET
DESIGN SPEED = 50 MPH

STATE OF TENNESSEE
DEPARTMENT OF TRANSPORTATION

LAYOUT OF BRIDGE
ALTERNATE "A"
STATE ROUTE 50
OVER
DUCK RIVER
BRIDGE I.D. NO. 41SR0500009
STATION 37+10.00
LOG MILE 14.04
HICKMAN COUNTY
2014

U-52-1

NOTE: ANY WORK WITHIN THE STREAM CHANNEL AREA (e.g., FOR PIER FOOTING, RIP-RAP PLACEMENT, MUILT-BARREL CULVERT/BRIDGE CONSTRUCTION, ETC.) SHALL BE SEPARATED FROM FLOWING WATER OR EXPECTED FLOW PATH AND PERFORMED DURING LOW FLOW CONDITIONS. ALL ITEMS USED WITHIN THE STREAM CHANNEL AREA FOR DIVERSION OF FLOW (OR EXPECTED FLOW), UNLESS SPECIFIED IN THE PLANS, SHALL NOT BE PAID FOR DIRECTLY BUT SHALL BE INCLUDED IN THE COST OF OTHER ITEMS. THIS NOTE EXCLUDES ANY ITEMS SPECIFIED IN THE PLANS FOR THE TEMPORARY DIVERSION CHANNELS, EC-STR-31 AND TEMPORARY DIVERSION CULVERTS, EC-STR-32 FOR SINGLE BARREL CULVERT CONSTRUCTION.

| | | | |
|---|---|---|---|
| DESIGNED BY | E. SLAYTON (D.I.) | DATE | 03-10 |
| DRAWN BY | BILL EASTON | DATE | 06-11 |
| SUPERVISED BY | MBC / HMB | DATE | 06-11 |
| CHECKED BY | E. SLAYTON | DATE | 04-14 |

HAROLD M. BROOKS, JR. STATE OF TENNESSEE

CORRECT Wayne G. Sieger
ENGINEER OF STRUCTURES

TEMPORARY MEDIAN BARRIER = 1,244 L.F.

MACHINED RIP-RAP CLASS "B" = 2,694 TONS

LAY1008B-DGN

Ⓘ DENOTES INTEGRAL.
Ⓕ DENOTES FIXED.
HATCHED AREA TO BE EXCAVATED AND PAID FOR AS A ROADWAY ITEM.

PIN: NO. 105351.00
CONST. NO. 41056-3217-94

| PROJECT NO. | YEAR | SHEET NO. |
|---|---|---|
| BR-STP-50(29) | 2014 | |

REVISIONS

| NO. | DATE | BY | BRIEF DESCRIPTION |
|---|---|---|---|
| | | | |
| | | | |
| | | | |
| | | | |

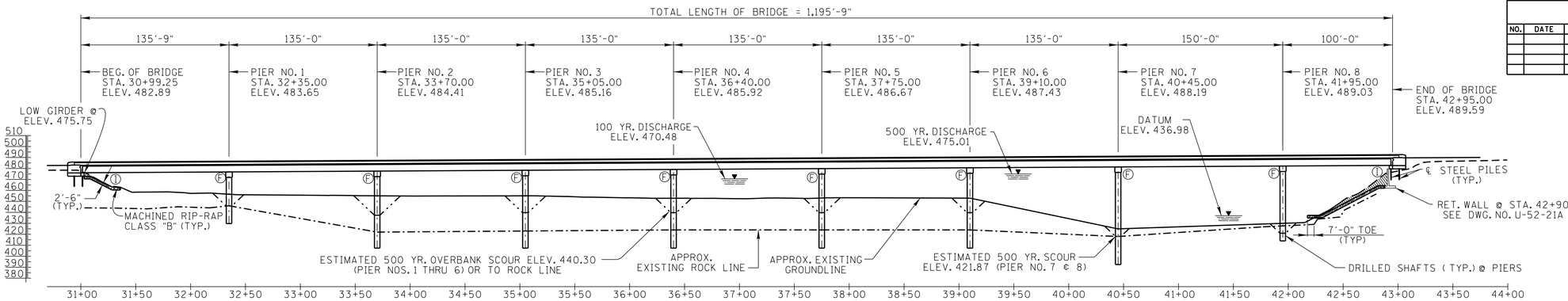


ELEVATION

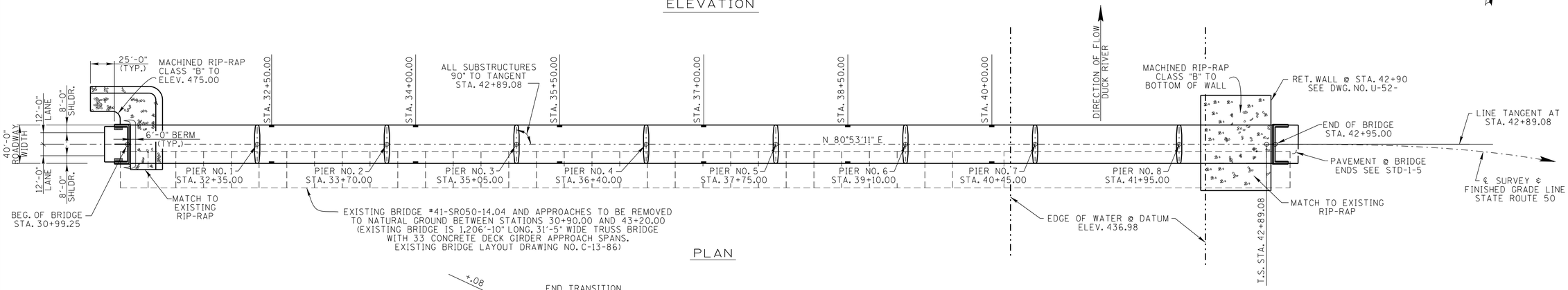


PLAN

## CURVE DATA

(STATE ROUTE 50)
P.I. STA. 48+44.82
N 531,858.6051
E 1,517,810.2762
Δs 52°28'25" (RT)
Δc 31°29'11" (RT)
Dc 6°59'45"
Rc 819.00
Lc 450.07
Ts 555.74
Ls 300.00
θs 10°29'37"
Se 0.080 FT/FT
DESIGN SPEED = 50 mph

## HYDRAULIC DATA

DRAINAGE AREA = 2.070 MI.²
DESIGN DISCHARGE (100 YR.) = 115,000 CFS
WATER AREA PROVIDED BELOW EL. 470.47 = 21,709.01 FT²
100 YR. VELOCITY = 5.30 FPS
100 YR. BRIDGE BACKWATER = 0.08 FT. @ EL. 470.49
ROADWAY OVERTOPPING EL. = 480.81
500 YR. DISCHARGE 146,000 CFS @ EL. 474.97

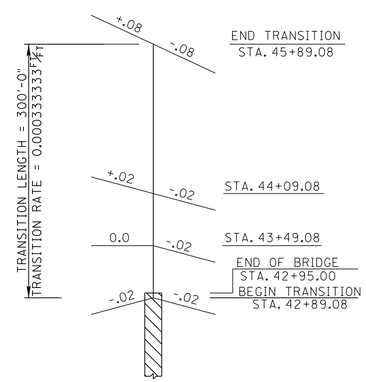


TRANSITION SKETCH

DENOTES: END OF BRIDGE DRAIN REQUIRED. (2'-0" x 8'-7") (SEE STANDARD DRAWING NO. STD-1-6, STD-1-7 ℄ STD-1-8)

DENOTES: DECK DRAINS (GRATE TYPE 1) ARE REQUIRED AS SHOWN. (SEE STANDARD DRAWING NO. STD-1-2SS).

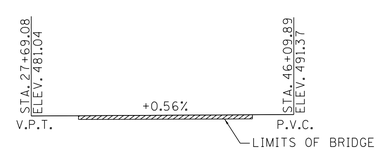


GRADE SKETCH
(STATE ROUTE 50)
N.T.S.

2029 ADT = 3,200
40'-0" ROADWAY WITH STD-1-1SS PARAPET
DESIGN SPEED = 50 MPH

STATE OF TENNESSEE
DEPARTMENT OF TRANSPORTATION

# LAYOUT OF BRIDGE ALTERNATE "B" STATE ROUTE 50 OVER DUCK RIVER

BRIDGE I.D. NO. 41SR0500009
STATION 37+10.00
LOG MILE 14.04
HICKMAN COUNTY
2014

U-52-2

NOTE: ANY WORK WITHIN THE STREAM CHANNEL AREA (e.g., FOR PIER FOOTING, RIP-RAP PLACEMENT, MUILT-BARREL CULVERT/BRIDGE CONSTRUCTION, ETC.) SHALL BE SEPARATED FROM FLOWING WATER OR EXPECTED FLOW PATH AND PERFORMED DURING LOW FLOW CONDITIONS. ALL ITEMS USED WITHIN THE STREAM CHANNEL AREA FOR DIVERSION OF FLOW (OR EXPECTED FLOW), UNLESS SPECIFIED IN THE PLANS, SHALL NOT BE PAID FOR DIRECTLY BUT SHALL BE INCLUDED IN THE COST OF OTHER ITEMS. THIS NOTE EXCLUDES ANY ITEMS SPECIFIED IN THE PLANS FOR THE TEMPORARY DIVERSION CHANNELS, EC-STR-31 AND TEMPORARY DIVERSION CULVERTS, EC-STR-32 FOR SINGLE BARREL CULVERT CONSTRUCTION.

| | | | |
|---|---|---|---|
| DESIGNED BY | E. SLAYTON (D.I.) | DATE | 03-10 |
| DRAWN BY | BILL EASTON | DATE | 06-11 |
| SUPERVISED BY | MBC / HMB | DATE | 06-11 |
| CHECKED BY | E. SLAYTON | DATE | 04-14 |

HARDIE M. BROOKS, JR. STATE OF TENNESSEE

CORRECT Wayne G. Sieger
ENGINEER OF STRUCTURES

TEMPORARY MEDIAN BARRIER = 1,244 L.F.

MACHINED RIP-RAP CLASS "B" = 2,694 TONS

LAY1008A-DGN

PIN: NO. 105351.00

CONST. NO. 41056-3217-94

| PROJECT NO. | YEAR | SHEET NO. |
|---|---|---|
| BR-STP-50(29) | 2014 | |

REVISIONS

| NO. | DATE | BY | BRIEF DESCRIPTION |
|---|---|---|---|
| | | | |
| | | | |
| | | | |
| | | | |

## LIST OF DRAWINGS


| LIST OF DRAWINGS | DWG. NO. | LAST REV. DATE |
|---|---|---|
| LAYOUT OF BRIDGE, ALTERNATE "A" | U-52-1 | ----- |
| LAYOUT OF BRIDGE, ALTERNATE "B" | U-52-2 | ----- |
| INDEX OF DRAWINGS | U-52-3 | ----- |
| GENERAL NOTES, ALTERNATE "A" | U-52-4 | ----- |
| ESTIMATED QUANTITIES, ALTERNATE "A" | U-52-5 | ----- |
| GENERAL NOTES, ALTERNATE "B" | U-52-6 | ----- |
| ESTIMATED QUANTITIES, ALTERNATE "B" | U-52-7 | ----- |
| FOUNDATION DATA | U-52-8 | ----- |
| FOUNDATION DATA | U-52-9 | ----- |
| SUPERSTRUCTURE | U-52-10 | ----- |
| SUPERSTRUCTURE DETAILS | U-52-11 | ----- |
| SUPERSTRUCTURE DETAILS | U-52-12 | ----- |
| SUPERSTRUCTURE DETAILS | U-52-13 | ----- |
| BRIDGE SCREED | U-52-14 | ----- |
| PRESTRESSED BULB-TEE BEAM DETAILS SPAN NOS 1 THRU 7 | U-52-15 | ----- |
| PRESTRESSED BULB-TEE BEAM DETAILS SPAN NO. 8 | U-52-16 | ----- |
| PRESTRESSED BULB-TEE BEAM DETAILS SPAN NO. 9 | U-52-17 | ----- |
| ABUTMENT NO. 1 | U-52-18 | ----- |
| ABUTMENT NO. 1 DETAILS | U-52-19 | ----- |
| ABUTMENT NO. 2 | U-52-20 | ----- |
| ABUTMENT NO. 2 DETAILS | U-52-21 | ----- |
| CONCEPTUAL LAYOUT OF RETAINING WALL NO. 1 | U-52-21A | ----- |
| CONCEPTUAL LAYOUT OF RETAINING WALL NO. 1 | U-52-21B | ----- |
| GEOTECHNICAL DESIGN NOTESAND REQUIREMENTS RETAINING WALL NO. 1 | U-52-21C | ----- |
| PIERS NO. 1 ALTERNATE "A" | U-52-22 | ----- |
| PIERS NO. 1 DETAILS ALTERNATE "A" | U-52-22A | ----- |
| PIERS NO. 2 THRU 6 ALTERNATE "A" | U-52-23 | ----- |
| PIERS NO. 2 THRU 6 DETAILS, ALTERNATE "A" | U-52-23A | ----- |
| PIER NO. 7 ALTERNATE "A" | U-52-24 | ----- |
| PIER NO. 7 DETAILS, ALTERNATE "A" | U-52-25 | ----- |
| PIER NO. 8 ALTERNATE "A" | U-52-26 | ----- |
| PIER NO. 8 DETAILS ALTERNATE "A" | U-52-27 | ----- |
| PIER NO. 1 ALTERNATE "B" | U-52-28 | ----- |
| PIER NO. 2 ALTERNATE "B" | U-52-29 | ----- |
| PIER NO. 3 ALTERNATE "B" | U-52-30 | ----- |
| PIER NO. 4 ALTERNATE "B" | U-52-31 | ----- |
| PIER NO. 5 ALTERNATE "B" | U-52-32 | ----- |
| PIER NO. 6 ALTERNATE "B" | U-52-33 | ----- |
| PIER NO. 7 ALTERNATE "B" | U-52-34 | ----- |
| PIER NO. 8 ALTERNATE "B" | U-52-35 | ----- |
| PIERS NO. 1, 2, 3, 4, 5, 6, 7 AND 8 DETAILS, ALTERNATE "B" | U-52-36 | ----- |
| FINAL FOUNDATION DATA, ALTERNATE "A" | U-52-37 | ----- |
| FINAL FOUNDATION DATA, ALTERNATE "A" | U-52-38 | ----- |
| FINAL FOUNDATION DATA, ALTERNATE "B" | U-52-39 | ----- |
| BILL OF STEEL | U-52-40 | ----- |
| BILL OF STEEL, ALTERNATE "A" | U-52-41 | ----- |
| BILL OF STEEL, ALTERNATE "A" | U-52-42 | ----- |
| BILL OF STEEL, ALTERNATE "B" | U-52-43 | ----- |
| BILL OF STEEL, ALTERNATE "B" | U-52-44 | ----- |


## LIST OF STANDARD DRAWINGS


| LIST OF STANDARD DRAWINGS | DWG. NO. | LAST REV. DATE |
|---|---|---|
| BRIDGE RAILING SINGLE SLOPE CONCRETE PARAPET | STD-1-1SS | 6-01-11 |
| SLIDER PLATES FOR SINGLE SLOPE PARAPET AND BRIDGE DECK DRAINS | STD-1-2SS | ---------- |
| PAVEMENT AT BRIDGE ENDS | STD-1-5 | 06-01-11 |
| BRIDGE END DRAIN WITH PAVEMENT AT BRIDGE ENDS | STD-1-6 | 04-28-97 |
| BRIDGE END DRAIN WITH PAVEMENT AT BRIDGE ENDS | STD-1-7 | 08-24-11 |
| BRIDGE END DRAIN 2′ × 8′-7" WITH PAVEMENT AT BRIDGE ENDS | STD-1-8 | 05-01-95 |
| STD. PRECAST PRESTRESSED BRIDGE DECK PANELS GENERAL DETAILS | STD-4-1 | 04-08-05 |
| STD. PRECAST PRESTRESSED BRIDGE DECK PANELS DESIGN CRITERIA | STD-4-2 | 04-08-05 |
| STD. PRECAST PRESTRESSED BRIDGE DECK PANELS GENERAL DETAILS | STD-4-3 | 03-02-02 |
| STD. PRECAST PRESTRESSED BRIDGE DECK PANELS CONSTRUCTION DETAILS | STD-4-4 | 06-10-96 |
| STD. PILE DETAILS | STD-5-1 | 10-25-93 |
| STD. PILE DETAILS | STD-5-2 | 4-08-05 |
| STD. SEISMIC DETAILS | STD-6-1 | 11-01-10 |
| STD. SEISMIC DETAILS | STD-6-2 | 11-07-94 |
| REINFORCING BAR SUPPORT DETAILS FOR CONCRETE SLABS | STD-9-1 | 10-07-08 |
| MISCELLANEOUS ABUTMENT AND DRAINAGE DETAILS | STD-10-1 | 04-08-05 |
| STD. DETAILS AND INT. DIAPH. DETAILS FOR BULB-TEE BEAMS | STD-14-1 | 10-15-08 |


## LIST OF SPECIAL PROVISIONS


| LIST OF SPECIAL PROVISIONS | PROV. NO. | LAST REV. DATE |
|---|---|---|
| REGARDING BRIDGE DECK CRACK SEALING | 604CR | 02-19-96 |
| REGARDING DRILLED SHAFT | 625 | ---------- |
| RETAINING WALLS | **624** | 08-06-12 |


## LIST OF REFERENCE DRAWINGS

EXISTING BRIDGE LAYOUT C-13-86

ALSO DWGS. C-10-54, E-2-4, E-2-5, B-6-135, E-2-54, E-2-56, C-13-87, E-2-10, B-10-114, C-13-88

HARDIE M. BROOKS, JR. STATE OF TENNESSEE

STATE OF TENNESSEE
**DEPARTMENT OF TRANSPORTATION**

INDEX OF DRAWINGS
STATE ROUTE 50
OVER
DUCK RIVER
STATION 37+10.00
LOG MILE 14.04
HICKMAN COUNTY
2014

CORRECT Wayne G. Sieger
ENGINEER OF STRUCTURES

| | | | |
|---|---|---|---|
| DESIGNED BY | E. SLAYTON | DATE | 03-10 |
| DRAWN BY | BILL EASTON | DATE | 06-11 |
| SUPERVISED BY | MBC / HMB | DATE | 06-11 |
| CHECKED BY | E. SLAYTON | DATE | 04-14 |

PIN: 105351.00
CONST. NO. 41056-3217-94

| PROJECT NO. | YEAR | SHEET NO. |
|---|---|---|
| BR-STP-50(29) | 2014 | |

REVISIONS

| | DATE | BY | BRIEF DESCRIPTION |
|---|---|---|---|
| | | | |

## GENERAL NOTES

SPECIFICATIONS: STANDARD ROAD AND BRIDGE SPECIFICATIONS OF THE TENNESSEE DEPARTMENT OF TRANSPORTATION (MARCH 1, 2006 EDITION).

LOADING: HL-93 LIVE LOADING; SEISMIC ZONE 1 SITE CLASS "B" WITH $A_S$ = 0.118G, $S_{DS}$ = 0.276G, $S_{D1}$ = 0.093G, (1000 YEAR RETURN PERIOD). DEAD LOAD INCLUDES 35 LB./SQ. FT. FOR FUTURE WEARING SURFACE.

DESIGN SPECIFICATION: AASHTO LRFD FOURTH EDITION, 2007, WITH INTERIMS, AND THE 2009 AASHTO GUIDE SPECIFICATIONS FOR LRFD SEISMIC BRIDGE DESIGN, EDITION 1 (WITH INTERIMS).

CONCRETE: TO BE CLASS "A" (CAST IN PLACE) f'c 3,000 PSI EXCEPT AS NOTED OTHERWISE.

DRILLED SHAFT CONCRETE TO BE CLASS "S" f'c = 3,500 PSI.

CLASS "D" CONCRETE FOR BRIDGE DECKS SHALL BE IN ACCORDANCE WITH SECTION 604 OF THE STANDARD SPECIFICATIONS.

BRIDGE DECK SURFACE FINISH: TO BE IN ACCORDANCE WITH NOTE 'C' IN ARTICLE 604.22 OF THE STANDARD SPECIFICATIONS.

BRIDGE DECK FORMS: BRIDGE DECK FORMS FOR CONCRETE DECKS SHALL BE CONSTRUCTED USING EITHER REMOVABLE FORMS OR PERMANENT FORMS. PERMANENT FORMS MAY BE EITHER REMAIN-IN-PLACE STEEL OR PRECAST, PRESTRESSED CONCRETE PANELS. IN EITHER CASE, FORMS SHALL BE ATTACHED BY MEANS OTHER THAN WELDING TO MAIN STRUCTURAL MEMBERS OR REINFORCING STEEL. TEMPORARY ERECTION DIAPHRAGMS MUST BE USED AT THE ENDS OF PRECAST CONCRETE GIRDERS WHERE END DIAPHRAGMS, SUPPORT DIAPHRAGMS, OR ABUTMENT BACKWALLS ARE TO BE POURED CONCURRENTLY WITH THE DECK AND SHALL BE PROVIDED ELSEWHERE IN ACCORDANCE WITH THE SPECIFICATIONS TO PREVENT GIRDER ROTATION. SEE STANDARD DRAWINGS STD-4-1 THRU 4, STD-14-1 AND ARTICLE 604.05 OF THE STANDARD SPECIFICATIONS.

SLAB OVERHANGS SUPPORTED BY BULB-TEE BEAMS: IT IS RECOMMENDED THAT SPACING OF OVERHANG BRACKETS FOR BULB-TEE BEAMS NOT EXCEED 2'-0" CENTER TO CENTER.

REINFORCING STEEL: SHALL BE ASTM A615 GRADE 60 UNLESS NOTED OTHERWISE. SEE SECTION 604 AND 907 OF THE STANDARD SPECIFICATIONS.

SPECIAL NOTE - FOOTING FOR PIER NO. 1: AFTER EXCAVATION TO ROCK FOR FOOTING HAS BEEN COMPLETED, HOLES 6' DEEP SHALL BE DRILLED AT POINTS DESIGNATED BY THE ENGINEER. FROM THE RESULTS OBTAINED, THE ENGINEER SHALL DETERMINE THE FINAL FOOTING ELEVATIONS. NO REINFORCING STEEL FOR PIER COLUMNS SHALL BE ORDERED UNTIL FINAL FOOTING ELEVATION HAVE BEEN DETERMINED.

SPECIAL NOTE: FOUNDATIONS FOR PIERS NO. 2, 3, 4, 5 AND 6 SHALL BE EXCAVATED TO THE BOTTOM OF FOOTING ELEVATIONS SHOWN; ROD SOUNDINGS SHALL THEN BE MADE AS DIRECTED BY THE ENGINEER. FROM THE RESULTS OBTAINED, THE ENGINEER WILL DECIDE IF PILES WILL BE USED OR THE FOOTINGS CARRIED TO ROCK. COST OF ROD SOUNDING TO BE INCLUDED IN THE UNIT PRICE BID FOR OTHER ITEMS. NO REINFORCING STEEL FOR PIER COLUMNS OR FOOTINGS SHALL BE ORDERED UNTIL FINAL ELEVATIONS HAVE BEEN DETERMINED.

PILES: TO BE HP10×42 AT THE ABUTMENTS AND HP12×53 AT THE PIERS. DRIVEN TO REFUSAL ON ROCK OR A MINIMUM BEARING OF 55 TONS FOR THE ABUTMENTS AND 70 TONS FOR THE PIERS.

NOTE: PILES SHALL BE EQUIPPED WITH CAST STEEL POINTS. ALSO, SEE STANDARD DRAWING STD-5-1 FOR ADDITIONAL NOTES.

BRIDGE RAIL SYSTEM: BUILD BRIDGE RAILINGS ACCORDING TO STANDARD DRAWING STD-1-1SS. THE BRIDGE RAILING SHALL BE FORMED AND CAST PLUMB, NOT PERPENDICULAR TO THE SLAB. THE DIMENSIONS AT THE TRAFFIC FACE SHALL BE KEPT CONSTANT, WITH VARIATION DUE TO CROSS SLOPE ACCOMMODATED AT THE REAR FACE.

NOTE: THE CONTRACTOR SHALL PROVIDE 100% CONVENTIONAL FALL PROTECTION FOR WORKERS INSTALLING DECKING ABOVE 15 FEET.

SHOP DRAWINGS: SEE SECTION 105.02 OF THE STANDARD SPECIFICATIONS.

REQUIREMENTS AND RESTRICTIONS FOR PHASE CONSTRUCTION

1. THE STAGE CONSTRUCTION SEQUENCE MAY PROHIBIT THE EXTRACTION OF SOME SHEET PILING. ALL COSTS ASSOCIATED WITH THE SHEET PILING SHALL BE INCLUDED IN OTHER ITEMS.
2. THE LOCATION OF LONGITUDINAL CONSTRUCTION JOINTS SHALL NOT BE CHANGED TO ACCOMMODATE REMAIN-IN-PLACE DECK FORMS.
3. NO SHEET PILES OR BEARING PILES MAY BE DRIVEN FROM THE EXISTING OR PROPOSED STRUCTURE.
4. 2 - 10'-0" PHASE I AND 2 - 10'-0" PHASE II TRAFFIC LANES SHALL BE MAINTAINED AT ALL TIMES.

FINISHING CONCRETE SURFACES: CONCRETE FINISHING SHALL BE IN ACCORDANCE WITH SECTION 604.21 OF THE TENNESSEE STANDARD SPECIFICATION. A CLASS I FINISH FOLLOWED BY AN APPLIED TEXTURE FINISH SHALL BE USED IN LIEU OF CLASS II FINISH. NO TEXTURE FINISH SHALL BE APPLIED PRIOR TO COMPLETION OF PAVING AND HAULING OPERATIONS AT THE BRIDGE SITE. THE APPLIED TEXTURE FINISH SHALL BE MEASURED AND PAID FOR UNDER ITEM NO. 604-04.01.

RIP-RAP: MACHINED RIP-RAP SHALL BE CLASS "B" IN ACCORDANCE WITH SECTION 709 OF THE STANDARD SPECIFICATIONS AND SHALL BE MEASURED AND PAID FOR UNDER ROADWAY ITEM 709-05.08.

VALUE ENGINEERING ALTERNATE BRIDGE DESIGN CRITERIA: ALTERNATE BRIDGE DESIGN PROPOSALS MAY NOT DIMINISH THE FUNCTIONAL OR STRUCTURAL EQUIVALENCY OF THE BRIDGE AND MUST MEET OR EXCEED BOTH THE SERVICE LEVEL AND ULTIMATE CAPACITIES OF THE CONTRACT PLANS STRUCTURE. ADDITIONALLY, THE WATERWAY OPENING AND FLOOD CLEARANCES MAY NOT BE REDUCED.

NOTE: THE FILLS AT THE ENDS OF THE BRIDGE SHALL BE IN PLACE AND THOROUGHLY COMPACTED BEFORE ANY ABUTMENT PILES ARE DRIVEN.

NOTE: THE CONTRACTOR SHALL ERECT POSTING SIGNS AT EACH APPROACH TO THE EXISTING BRIDGE STATING THE LOAD LIMIT TO BE 10 TONS FOR 2-AXLE VEHICLES AND 18 TONS FOR VEHICLES WITH 3 OR MORE AXLES. DUE TO THIS RESTRICTION, THE CONTRACTOR CANNOT USE THE EXISITNG BRIDGE FOR DELIVERY OF CONSTRUCTION MATERIALS. ADDITIONALLY, THE CONTRACTOR SHALL MAINTAIN THE EXISTING STRUCTURE IN ACCORDANCE WITH THE SPECIFICATIONS. THE COST OF REQUIRED LABOR AND MATERIALS SHALL BE INCLUDED IN THE UNIT PRICE BID FOR OTHER ITEMS.

NOTE: OUR MAINTAINANCE RECORDS INDICATE THE BRIDGE WAS ORIGINALLY PAINTED WITH MATERIALS CONTAINING LEAD AND/OR CHROMATES AND SUBSEQUENTLY OVERCOATED WITH EPOXY PRIMER AND URETHANE. THE CONTRACTOR IS REQUIRED TO PROCEED ACCORDINGLY TO TAKE ALL MANDATORY SAFEGUARDS PRESCRIBED BY STATE AND FEDERAL LAW FOR BOTH WORKER PROTECTION AND HAZARDOUS MATERIALS DISPOSAL.

NOTE: WHEN STRUCTURAL STEEL COATED WITH LEAD AND/OR CHROMATE PAINTS ARE TO BE SEVERED USING THERMAL CUTTING METHODS, THE AREAS TO BE CUT SHALL FIRST BE CLEANED TO BARE METAL BY ABRASION.

## ADDITIONAL NOTES:

NOTE: MAXIMUM COARSE AGGREGATE SIZE FOR DRILLED SHAFT CONCRETE IS NO. 7, ½" STONE. THIS SUPERCEDES ARTICLE 625.06 OF THE SPECIAL PROVISION 625.

NOTE: THE ELAPSED TIME FROM THE BEGINNING OF CONCRETE PLACEMENT IN THE SHAFT TO COMPLETION OF THE PLACEMENT SHALL NOT EXCEED 10 HOURS. THIS SUPERCEDES ARTICLE 625.06 OF THE SPECIAL PROVISION 625.

NOTE: THE MAXIMUM SAND CONTENT OF ANY BENTONITE SLURRY USED SHALL BE 2% PRIOR TO CONCRETING.

### ESTIMATED ELEVATIONS

| DESCRIPTION | PIER NO. 7 | PIER NO. 8 |
|---|---|---|
| EXISTING GROUND | 425.8 | 430.6 |
| TOP OF WEATHERED ROCK | 419.55 | N/A |
| TOP OF SOUND ROCK | 406.5 | 428.00 |
| BOTTOM OF SHAFT TIP | 392.5 | 414.00 |
| DISTANCE FROM GROUND TO BOTTOM OF SHAFT TIP | 33'-4" | 16'-8" |

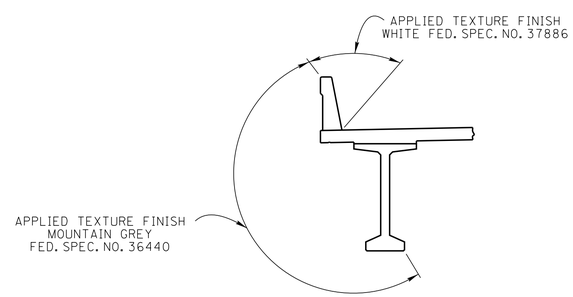


TYPICAL @ CANTILEVER

### APPLIED TEXTURE FINISH SKETCH

NOTE: IN ADDITION TO THE SURFACES SHOWN IN THE APPLIED TEXTURE FINISH SKETCH ALL EXPOSED SURFACES OF THE RETAINING WALL, WINGWALLS, ABUTMENT BEAMS, PIERS AND EXTERIOR PORTIONS OF ENDWALLS ARE TO RECEIVE AN APPLIED TEXTURE FINISH (MOUNTAIN GREY, FED. SPEC. NO. 36440).

STATE OF TENNESSEE
DEPARTMENT OF TRANSPORTATION

GENERAL NOTES
ALTERNATE "A"
STATE ROUTE 50
OVER DUCK RIVER
STATION 37+10.00
LOG MILE 14.04
HICKMAN COUNTY
2014

HARDIE M. BROOKS, JR. STATE OF TENNESSEE

CORRECT Wayne G. Sieger
ENGINEER OF STRUCTURES

U-52-4

DESIGNED BY E. SLAYTON DATE 04-11
DRAWN BY ANGELA HUNTER DATE 04-11
SUPERVISED BY M.B.C./H.M.B. DATE 04-11
CHECKED BY E. SLAYTON DATE 04-14

GN1008ALTA.DGN

PIN: 105351.00
CONST. NO. 41056-3217-94

| PROJECT NO. | YEAR | SHEET NO. |
|---|---|---|
| BR-STP-50(29) | 2014 | |

REVISIONS

| | DATE | BY | BRIEF DESCRIPTION |
|---|---|---|---|
| | | | |

## ESTIMATED QUANTITIES

| | ITEM NO. | DESCRIPTION | UNIT | TOTAL | SUPERSTRUCTURE | ABUT. NO. 1 | PIER NO. 1 | PIER NO. 2 | PIER NO. 3 | PIER NO. 4 | PIER NO. 5 | PIER NO. 6 | PIER NO. 7 | PIER NO. 8 | ABUT. NO. 2 | RET. WALL |
|---|---|---|---|---|---|---|---|---|---|---|---|---|---|---|---|---|
| 2 | 202-04.01 | REMOVAL OF STRUCTURES (EXIST. BR. NO. 41-SR050-14.04) | L.S. | 1 | | | | | | | | | | | | |
| 3 | 204-02.01 | DRY EXCAVATION (BRIDGES) | C.Y. | 1,518 | | 120 | 170 | 239 | 234 | 211 | 216 | 208 | | | 120 | |
| 17 | 204-02.30 | DRILLED CAISSON - UNCLASSIFIED (2'-0" DIAMETER) | L.F. | 75 | | | | | | | | | | | 75 | |
| 3 | 204-04.01 | ROCK EXCAVATION (BRIDGES) | C.Y. | 7 | | | 7 | | | | | | | | | |
| | 204-05 | ROCK DRILLING (BRIDGES) | L.F. | 30 | | | 30 | | | | | | | | | |
| 9 | 303-01.02 | GRANULAR BACKFILL (BRIDGES) | TON | 32 | | 16 | | | | | | | | | 16 | |
| | 604-02.03 | EPOXY COATED REINFORCING STEEL | LB. | 477,799 | 474,129 | 1,835 | | | | | | | | | 1,835 | |
| 8 | 604-03.01 | CLASS 'A' CONCRETE (BRIDGES) | C.Y. | 1,048 | | 59 | 107 | 124 | 125 | 126 | 127 | 128 | 95 | 97 | 60 | |
| 14 | 604-03.02 | STEEL BAR REINFORCEMENT (BRIDGES) | LB. | 220,433 | 6,955 | 6,838 | 19,996 | 21,457 | 21,675 | 21,893 | 22,095 | 22,297 | 43,830 | 26,559 | 6,838 | |
| 1 | 604-03.04 | PAVEMENT AT BRIDGE ENDS | S.Y. | 204 | | | | | | | | | | | | |
| | 604-03.09 | CLASS 'D' CONCRETE (BRIDGE DECK) | C.Y. | 1,451 | 1,451 | | | | | | | | | | | |
| | 604-04.01 | APPLIED TEXTURE FINISH (NEW STRUCTURES) | S.Y. | 6,575 | 5,168 | 45 | 132 | 139 | 143 | 151 | 153 | 157 | 220 | 223 | 44 | |
| | 604-05.31 | BRIDGE DECK GROOVING (MECHANICAL) | S.Y. | 5,090 | | | | | | | | | | | | |
| | 604-07.01 | RETAINING WALL | S.F. | 1,615 | | | | | | | | | | | | 1,615 |
| | 606-02.03 | STEEL PILES (10 INCH) | L.F. | 563 | | 383 | | | | | | | | | 180 | |
| 15 | 606-02.06 | PILE TIPS (STEEL PILES, 10 INCH) | EA. | 30 | | 15 | | | | | | | | | 15 | |
| | 606-03.03 | STEEL PILES (12 INCH) | L.F. | 3,452 | | | | 748 | 708 | 678 | 632 | 686 | | | | |
| 15 | 606-03.06 | PILE TIPS (STEEL PILES, 12 INCH) | EA. | 200 | | | | 40 | 40 | 40 | 40 | 40 | | | | |
| | 610-10.45 | DECK DRAINS (GRATE TYPE 1) | EA. | 12 | 12 | | | | | | | | | | | |
| 10 | 615-01.12 | PRESTRESSED CONCRETE BULB TEE BEAM (6" WEB)(BT-72) | L.F. | 5,904 | | | | | | | | | | | | |
| 4 | 617-02 | BRIDGE DECK CRACK SEALING | L.F. | 1,196 | | | | | | | | | | | | |
| | 620-05.01 | CONCRETE PARAPET SINGLE SLOPE (STD-1-1SS) | L.F. | 2,466 | | | | | | | | | | | | |
| 11 | 625-02.01 | DRILLED SHAFT - SOIL (5'-0" DIA.) | V.F. | 18 | | | | | | | | | 13 | 5 | | |
| 13 11 | 625-02.13 | DRILLED SHAFT - ROCK (5'-0" DIA.) | V.F. | 82 | | | | | | | | | 54 | 28 | | |
| | 625-02.25 | DRILLED SHAFT CASING - PERMANENT (5'-0" DIA.) | V.F. | 79 | | | | | | | | | 61 | 18 | | |
| | 625-02.40 | DRILLED SHAFT CONCRETE | C.Y. | 98 | | | | | | | | | 65 | 33 | | |
| 12 | 625-02.46 | SONIC LOGGING TESTING | EA. | 4 | | | | | | | | | 2 | 2 | | |
| 7 | 710-09.01 | 6" PERFORATED PIPE WITH VERTICAL DRAIN SYSTEM | L.F. | 140 | | 70 | | | | | | | | | 70 | |
| | 710-09.02 | 6" PIPE UNDERDRAIN | L.F. | 40 | | 20 | | | | | | | | | 20 | |

1 NOTE: PRIOR TO CONSTRUCTION OF THE PAVEMENT AT BRIDGE ENDS, THE CONTRACTOR SHALL SUBMIT A PROPOSED BILL OF STEEL TO THE ENGINEER FOR APPROVAL.

2 NOTE: LUMP SUM: TO INCLUDE COMPLETE REMOVAL OF EXISTING BRIDGE NO. 41-SR050-14.04 AND APPROACHES TO NATURAL GROUND BETWEEN STA. 30+90.00 AND STA. 43+20.00. EXISTING BRIDGE CONSIST OF: 33 CONCRETE DECK GIRDER APPROACH SPANS AT 30'-6" WIDE TOTALING 965'-11" LONG AND 1 STEEL TRUSS SPAN AT 31'-5" WIDE AND 240'-11" LONG.

3 EXCAVATION BASED ON FINAL PROFILE AT ABUTMENTS AND EXISTING GROUND AT THE PIERS.

4 NOTE: INCLUDES ALL COST FOR FURNISHING THE SEALER MATERIAL AND INSTALLING THE BRIDGE DECK CRACK SEALER (HMWM) INCLUDING CRACK PREPARATION, CLEANING, LABOR, AND ALL MISCELLANEOUS MATERIALS REQUIRED TO SEAL THE LONGITUDINAL CONSTRUCTION JOINT ACCORDING TO SPECIAL PROVISION 604CR AND MANUFACTURERS' SPECIFICATIONS. CRACK SEALING SHALL BE DONE AT THE END OF CONSTRUCTION TO ALLOW SHRINKAGE OF DECK CONCRETE CAUSING THE CRACK TO OCCUR.

5 NOTE: THE COST OF BITUMINOUS-FIBERBOARD AND ALL MISCELLANEOUS JOINT MATERIALS TO BE INCLUDED IN THE UNIT PRICE BID FOR OTHER ITEMS.

6 NOTE: INTERMEDIATE DIAPHRAGMS SHALL BE PAID FOR IN ACCORDANCE WITH STANDARD DRAWING STD-14-1. USE ALTERNATE INTERMEDIATE STRUCTURAL STEEL DIAPHRAGMS ONLY.

7 NOTE: COST OF POLYETHYLENE SHEETING AND ALL MISCELLANEOUS ITEMS NECESSARY FOR INSTALLATION TO BE INCLUDED IN THE UNIT PRICE BID FOR PERFORATED PIPE.

8 NOTE: THE COST OF ALL MATERIALS AND LABOR NECESSARY FOR THE INSTALLATION OF 120 ANCHOR BOLT ASSEMBLIES SHALL BE INCLUDED IN THE UNIT PRICE BID FOR CLASS "A" CONCRETE (BRIDGES), ITEM NO. 604-03.01. SEE NOTE ON DWG. NO. U-52-12.

9 NOTE: GRANULAR BACKFILL SHALL BE CLASS "A" GRADING "D" MATERIAL. SEE STANDARD DRAWING NO. STD-10-1.

10 NOTE: COST OF ELASTOMERIC PADS AND RUBBER BONDING CEMENT TO BE INCLUDED IN THE UNIT PRICE BID FOR THE PRESTRESSED BEAM.

11 NOTE: THE COST OF THE FOLLOWING ITEMS IS TO BE INCLUDED IN THE UNIT PRICE BID FOR ITEMS 625-02.01 AND 625-02.13:
1. DRILLING THE SHAFT
2. CLEANING AND INSPECTING THE SHAFT
3. TELEVISION CAMERA INSPECTION OF THE SHAFT WALLS AND ROCK SOCKET SURFACES.
4. INSTALLATION OF ALL CASING
5. SETTING OF ALL SHAFT REINFORCING
6. CONCRETE CORING (1 PER SHAFT)
7. INSTALLATION OF 1½" DIAMETER PIPES IN SHAFTS FOR CSL TESTING
8. TEMPORARY CASING

12 NOTE: THE CSL TESTING FIRM MUST BE PRESENT FOR ALL SHAFT POURS.

13 NOTE: SEE ARTICLE 625.31 OF THE SPECIAL PROVISIONS. THE INTENT IS FOR THE CORE DRILLING AND SAMPLING TO BE PERFORMED PRIOR TO SHAFT DRILLING. SUBJECT TO THE APPROVAL FROM THE GEO-TECHNICAL DIVISION ENGINEER, THESE CORES ARE TO BE USED TO PRE-DETERMINE ACCEPTABLE SHAFT TIP ELEVATIONS. CORES SHALL EXTEND 10' BELOW ESTIMATED TIP ELEVATIONS SHOWN ON THE PLANS. 1 CORE IS REQUIRED PER SHAFT. UPON APPROVAL OF THE GEO-TECHNICAL DIVISION, THE ROD SOUNDINGS REQUIRED BY ARTICLE 625.30 OF THE SPECIAL PROVISIONS AND PAID FOR UNDER ITEM 204-05, ROCK DRILLING (BRIDGES), MAY BE OMITTED.

14 NOTE: MECHANICAL BAR SPLICERS MUST BE ON THE QUALIFIED PRODUCTS LIST 27 MAINTAINED BY THE DIVISION OF MATERIALS AND TESTS. THE BAR SPLICER SHALL MEET AASHTO STANDARD SPECIFICATIONS FOR MECHANICAL CONNECTION. WHEN EPOXY COATING IS REQUIRED, THE EXPOSED THREADS SHALL BE REPAIRED AFTER SPLICING ACCORDING TO SECTION 907 OF THE STANDARD SPECIFICATIONS. THE COST OF FURNISHING THE BAR SPLICERS, (AND EPOXY COATING WHEN REQUIRED) INCLUDING ALL LABOR AND MATERIALS NECESSARY FOR COMPLETE INSTALLATION, SHALL BE INCLUDED IN THE UNIT PRICE BID FOR ITEM NO. 604-03.02.

15 NOTE: THE UNIT PRICE BID FOR THE STEEL POINTS SHALL INCLUDE FURNISHING AND INSTALLATION TO THE PILES.

16 NOTE: THE CONTRACTOR IS TO HAVE THE STABILITY OF THE SHAFT CAGE VERIFIED BY A REGISTERED ENGINEER.

17 NOTE: FOUNDATION FOR ABUTMENT NO. 2 SHALL BE EXCAVATED TO THE BOTTOM OF THE ABUTMENT BEAM. ROD SOUNDINGS SHALL THEN BE MADE AS DIRECTED BY THE ENGINEER. FROM THE RESULTS OBTAINED, THE ENGINEER WILL DECIDE IF ITEM NO. 204-02.30 IS NEEDED OR IF PILES MAY BE DRIVEN TO BEARING. SEE DETAIL ON DWG. NO. U-52-20 & U-52-21.

STATE OF TENNESSEE
DEPARTMENT OF TRANSPORTATION

HARDIE M. BROOKS, JR. STATE OF TENNESSEE

ESTIMATED QUANTITIES
ALTERNATE "A"
STATE ROUTE 50
OVER DUCK RIVER
STATION 37+10.00
LOG MILE 14.04
HICKMAN COUNTY
2014

CORRECT Wayne G. Sieger
ENGINEER OF STRUCTURES

U-52-5

DESIGNED BY E. SLAYTON DATE 04-11
DRAWN BY ANGELA HUNTER DATE 04-11
SUPERVISED BY M.B.C./H.M.B. DATE 04-11
CHECKED BY E. SLAYTON DATE 04-14

PIN: 105351.00
CONST. NO. 41056-3217-94

| PROJECT NO. | YEAR | SHEET NO. |
|---|---|---|
| BR-STP-50(29) | 2014 | |

REVISIONS

| | DATE | BY | BRIEF DESCRIPTION |
|---|---|---|---|
| | | | |

## GENERAL NOTES

SPECIFICATIONS: STANDARD ROAD AND BRIDGE SPECIFICATIONS OF THE TENNESSEE DEPARTMENT OF TRANSPORTATION (MARCH 1, 2006 EDITION).

LOADING: HL-93 LIVE LOADING; SEISMIC ZONE 1 SITE CLASS "B" WITH $A_S$ = 0.118G, $S_{DS}$ = 0.276G, $S_{D1}$ = 0.093G, (1000 YEAR RETURN PERIOD). DEAD LOAD INCLUDES 35 LB./SQ. FT. FOR FUTURE WEARING SURFACE.

DESIGN SPECIFICATION: AASHTO LRFD FOURTH EDITION, 2007, WITH INTERIMS, AND THE 2009 AASHTO GUIDE SPECIFICATIONS FOR LRFD SEISMIC BRIDGE DESIGN, EDITION 1 (WITH INTERIMS).

CONCRETE: TO BE CLASS "A" (CAST IN PLACE) f'c 3,000 PSI EXCEPT AS NOTED OTHERWISE.

DRILLED SHAFT CONCRETE TO BE CLASS "S" f'c = 3,500 PSI.

CLASS "D" CONCRETE FOR BRIDGE DECKS SHALL BE IN ACCORDANCE WITH SECTION 604 OF THE STANDARD SPECIFICATIONS.

BRIDGE DECK SURFACE FINISH: TO BE IN ACCORDANCE WITH NOTE 'C' IN ARTICLE 604.22 OF THE STANDARD SPECIFICATIONS.

BRIDGE DECK FORMS: BRIDGE DECK FORMS FOR CONCRETE DECKS SHALL BE CONSTRUCTED USING EITHER REMOVABLE FORMS OR PERMANENT FORMS. PERMANENT FORMS MAY BE EITHER REMAIN-IN-PLACE STEEL OR PRECAST, PRESTRESSED CONCRETE PANELS. IN EITHER CASE, FORMS SHALL BE ATTACHED BY MEANS OTHER THAN WELDING TO MAIN STRUCTURAL MEMBERS OR REINFORCING STEEL. TEMPORARY ERECTION DIAPHRAGMS MUST BE USED AT THE ENDS OF PRECAST CONCRETE GIRDERS WHERE END DIAPHRAGMS, SUPPORT DIAPHRAGMS, OR ABUTMENT BACKWALLS ARE TO BE POURED CONCURRENTLY WITH THE DECK AND SHALL BE PROVIDED ELSEWHERE IN ACCORDANCE WITH THE SPECIFICATIONS TO PREVENT GIRDER ROTATION. SEE STANDARD DRAWINGS STD-4-1 THRU 4, STD-14-1 AND ARTICLE 604.05 OF THE STANDARD SPECIFICATIONS.

SLAB OVERHANGS SUPPORTED BY BULB-TEE BEAMS: IT IS RECOMMENDED THAT SPACING OF OVERHANG BRACKETS FOR BULB-TEE BEAMS NOT EXCEED 2'-0" CENTER TO CENTER.

REINFORCING STEEL: SHALL BE ASTM A615 GRADE 60 UNLESS NOTED OTHERWISE. SEE SECTION 604 AND 907 OF THE STANDARD SPECIFICATIONS.

PILES: TO BE HP10×42 AT THE ABUTMENTS DRIVEN TO REFUSAL ON ROCK OR A MINIMUM BEARING OF 55 TONS.

NOTE: PILES SHALL BE EQUIPPED WITH CAST STEEL POINTS. ALSO, SEE STANDARD DRAWING STD-5-1 FOR ADDITIONAL NOTES.

BRIDGE RAIL SYSTEM: BUILD BRIDGE RAILINGS ACCORDING TO STANDARD DRAWING STD-1-1SS. THE BRIDGE RAILING SHALL BE FORMED AND CAST PLUMB, NOT PERPENDICULAR TO THE SLAB. THE DIMENSIONS AT THE TRAFFIC FACE SHALL BE KEPT CONSTANT, WITH VARIATION DUE TO CROSS SLOPE ACCOMMODATED AT THE REAR FACE.

NOTE: THE CONTRACTOR SHALL PROVIDE 100% CONVENTIONAL FALL PROTECTION FOR WORKERS INSTALLING DECKING ABOVE 15 FEET.

SHOP DRAWINGS: SEE SECTION 105.02 OF THE STANDARD SPECIFICATIONS.

REQUIREMENTS AND RESTRICTIONS FOR PHASE CONSTRUCTION

1. THE STAGE CONSTRUCTION SEQUENCE MAY PROHIBIT THE EXTRACTION OF SOME SHEET PILING. ALL COSTS ASSOCIATED WITH THE SHEET PILING SHALL BE INCLUDED IN OTHER ITEMS.
2. THE LOCATION OF LONGITUDINAL CONSTRUCTION JOINTS SHALL NOT BE CHANGED TO ACCOMMODATE REMAIN-IN-PLACE DECK FORMS.
3. NO SHEET PILES OR BEARING PILES MAY BE DRIVEN FROM THE EXISTING OR PROPOSED STRUCTURE.
4. 2 - 10'-0" PHASE I AND 2 - 10'-0" PHASE II TRAFFIC LANES SHALL BE MAINTAINED AT ALL TIMES.

FINISHING CONCRETE SURFACES: CONCRETE FINISHING SHALL BE IN ACCORDANCE WITH SECTION 604.21 OF THE TENNESSEE STANDARD SPECIFICATION. A CLASS I FINISH FOLLOWED BY AN APPLIED TEXTURE FINISH SHALL BE USED IN LIEU OF CLASS II FINISH. NO TEXTURE FINISH SHALL BE APPLIED PRIOR TO COMPLETION OF PAVING AND HAULING OPERATIONS AT THE BRIDGE SITE. THE APPLIED TEXTURE FINISH SHALL BE MEASURED AND PAID FOR UNDER ITEM NO. 604-04.01.

RIP-RAP: MACHINED RIP-RAP SHALL BE CLASS "B" IN ACCORDANCE WITH SECTION 709 OF THE STANDARD SPECIFICATIONS AND SHALL BE MEASURED AND PAID FOR UNDER ROADWAY ITEM 709-05.08.

VALUE ENGINEERING ALTERNATE BRIDGE DESIGN CRITERIA: ALTERNATE BRIDGE DESIGN PROPOSALS MAY NOT DIMINISH THE FUNCTIONAL OR STRUCTURAL EQUIVALENCY OF THE BRIDGE AND MUST MEET OR EXCEED BOTH THE SERVICE LEVEL AND ULTIMATE CAPACITIES OF THE CONTRACT PLANS STRUCTURE. ADDITIONALLY, THE WATERWAY OPENING AND FLOOD CLEARANCES MAY NOT BE REDUCED.

NOTE: THE FILLS AT THE ENDS OF THE BRIDGE SHALL BE IN PLACE AND THOROUGHLY COMPACTED BEFORE ANY ABUTMENT PILES ARE DRIVEN.

NOTE: THE CONTRACTOR SHALL ERECT POSTING SIGNS AT EACH APPROACH TO THE EXISTING BRIDGE STATING THE LOAD LIMIT TO BE 10 TONS FOR 2-AXLE VEHICLES AND 18 TONS FOR VEHICLES WITH 3 OR MORE AXLES. DUE TO THIS RESTRICTION, THE CONTRACTOR CANNOT USE THE EXISITNG BRIDGE FOR DELIVERY OF CONSTRUCTION MATERIALS. ADDITIONALLY, THE CONTRACTOR SHALL MAINTAIN THE EXISTING STRUCTURE IN ACCORDANCE WITH THE SPECIFICATIONS. THE COST OF REQUIRED LABOR AND MATERIALS SHALL BE INCLUDED IN THE UNIT PRICE BID FOR OTHER ITEMS.

NOTE: OUR MAINTAINANCE RECORDS INDICATE THE BRIDGE WAS ORIGINALLY PAINTED WITH MATERIALS CONTAINING LEAD AND/OR CHROMATES AND SUBSEQUENTLY OVERCOATED WITH EPOXY PRIMER AND URETHANE. THE CONTRACTOR IS REQUIRED TO PROCEED ACCORDINGLY TO TAKE ALL MANDATORY SAFEGUARDS PRESCRIBED BY STATE AND FEDERAL LAW FOR BOTH WORKER PROTECTION AND HAZARDOUS MATERIALS DISPOSAL.

NOTE: WHEN STRUCTURAL STEEL COATED WITH LEAD AND/OR CHROMATE PAINTS ARE TO BE SEVERED USING THERMAL CUTTING METHODS, THE AREAS TO BE CUT SHALL FIRST BE CLEANED TO BARE METAL BY ABRASION.

## ADDITIONAL NOTES:

NOTE: MAXIMUM COARSE AGGREGATE SIZE FOR DRILLED SHAFT CONCRETE IS NO. 7, ½" STONE. THIS SUPERCEDES ARTICLE 625.06 OF THE SPECIAL PROVISION 625.

NOTE: THE ELAPSED TIME FROM THE BEGINNING OF CONCRETE PLACEMENT IN THE SHAFT TO COMPLETION OF THE PLACEMENT SHALL NOT EXCEED 10 HOURS. THIS SUPERCEDES ARTICLE 625.06 OF THE SPECIAL PROVISION 625.

NOTE: THE MAXIMUM SAND CONTENT OF ANY BENTONITE SLURRY USED SHALL BE 2% PRIOR TO CONCRETING.

## ESTIMATED ELEVATIONS

| DESCRIPTION | PIER NO. 1 | PIER NO. 2 | PIER NO. 3 | PIER NO. 4 | PIER NO. 5 | PIER NO. 6 | PIER NO. 7 | PIER NO. 8 |
|---|---|---|---|---|---|---|---|---|
| EXISTING GROUND | 457.65 | 456.30 | 455.95 | 454.45 | 454.75 | 454.25 | 425.80 | 430.6 |
| TOP OF WEATHERED ROCK | N/A | N/A | N/A | N/A | N/A | N/A | 419.55 | N/A |
| TOP OF SOUND ROCK | 446.25 | 422.60 | 423.60 | 424.35 | 425.50 | 424.15 | 406.50 | 428.00 |
| BOTTOM OF SHAFT TIP | 432.25 | 408.60 | 409.60 | 410.35 | 411.50 | 410.15 | 392.50 | 414.00 |
| DISTANCE FROM GROUND TO BOTTOM OF SHAFT TIP | 25'-5" | 47'-9" | 46'-4" | 44'-2" | 43'-3" | 44'-2" | 33'-4" | 16'-8" |

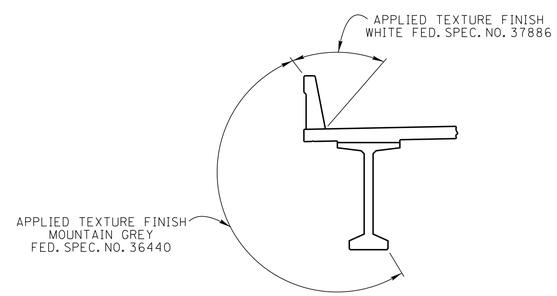


TYPICAL @ CANTILEVER

## APPLIED TEXTURE FINISH SKETCH

NOTE: IN ADDITION TO THE SURFACES SHOWN IN THE APPLIED TEXTURE FINISH SKETCH ALL EXPOSED SURFACES OF THE RETAINING WALL, WINGWALLS, ABUTMENT BEAMS, PIERS AND EXTERIOR PORTIONS OF ENDWALLS ARE TO RECEIVE AN APPLIED TEXTURE FINISH (MOUNTAIN GREY, FED. SPEC. NO. 36440).

STATE OF TENNESSEE
DEPARTMENT OF TRANSPORTATION

GENERAL NOTES
ALTERNATE "B"
STATE ROUTE 50
OVER DUCK RIVER
STATION 37+10.00
LOG MILE 14.04
HICKMAN COUNTY
2014

HARDIE M. BROOKS, JR. STATE OF TENNESSEE

CORRECT _____ ENGINEER OF STRUCTURES

U-52-6

DESIGNED BY E. SLAYTON DATE 04-11
DRAWN BY ANGELA HUNTER DATE 04-11
SUPERVISED BY M.B.C./H.M.B. DATE 04-11
CHECKED BY E. SLAYTON DATE 04-14

GN1008ALTB.DGN

PIN: 105351.00
CONST. NO. 41056-3217-94

| PROJECT NO. | YEAR | SHEET NO. |
|---|---|---|
| BR-STP-50(29) | 2014 | |

REVISIONS

| | DATE | BY | BRIEF DESCRIPTION |
|---|---|---|---|
| | | | |

## ESTIMATED QUANTITIES

| | ITEM NO. | DESCRIPTION | UNIT | TOTAL | SUPERSTRUCTURE | ABUT. NO. 1 | PIER NO. 1 | PIER NO. 2 | PIER NO. 3 | PIER NO. 4 | PIER NO. 5 | PIER NO. 6 | PIER NO. 7 | PIER NO. 8 | ABUT. NO. 2 | RET. WALL |
|---|---|---|---|---|---|---|---|---|---|---|---|---|---|---|---|---|
| 2 | 202-04.01 | REMOVAL OF STRUCTURES (EXIST. BR. NO. 41-SR050-14.04) | L.S. | 1 | | | | | | | | | | | | |
| 3 | 204-02.01 | DRY EXCAVATION (BRIDGES) | C.Y. | 240 | | 120 | | | | | | | | | 120 | |
| 17 | 204-02.30 | DRILLED CAISSON - UNCLASSIFIED (2'-0" DIAMETER) | L.F. | 75 | | | | | | | | | | | 75 | |
| 4 | 303-01.02 | GRANULAR BACKFILL (BRIDGES) | TON | 32 | | 16 | | | | | | | | | 16 | |
| | 604-02.03 | EPOXY COATED REINFORCING STEEL | LB. | 477,799 | 474,129 | 1,835 | | | | | | | | | 1,835 | |
| 8 | 604-03.01 | CLASS 'A' CONCRETE (BRIDGES) | C.Y. | 700 | | 59 | 59 | 62 | 64 | 67 | 68 | 69 | 95 | 97 | 60 | |
| 13 | 604-03.02 | STEEL BAR REINFORCEMENT (BRIDGES) | LB. | 242,700 | 6,955 | 6,838 | 17,841 | 26,739 | 26,683 | 26,683 | 26,574 | 27,175 | 43,815 | 26,559 | 6,838 | |
| 1 | 604-03.04 | PAVEMENT AT BRIDGE ENDS | S.Y. | 204 | | | | | | | | | | | | |
| | 604-03.09 | CLASS 'D' CONCRETE (BRIDGE DECK) | C.Y. | 1,451 | 1,451 | | | | | | | | | | | |
| | 604-04.01 | APPLIED TEXTURE FINISH (NEW STRUCTURES) | S.Y. | 6,575 | 5,168 | 45 | 132 | 139 | 143 | 151 | 153 | 157 | 220 | 223 | 44 | |
| | 604-05.31 | BRIDGE DECK GROOVING (MECHANICAL) | S.Y. | 5,090 | | | | | | | | | | | | |
| | 604-07.01 | RETAINING WALL | S.F. | 1,615 | | | | | | | | | | | | 1,615 |
| | 606-02.03 | STEEL PILES (10 INCH) | L.F. | 563 | | 383 | | | | | | | | | 180 | |
| 15 | 606-02.06 | PILE TIPS (STEEL PILES, 10 INCH) | EA. | 30 | | 15 | | | | | | | | | 15 | |
| | 610-10.45 | DECK DRAINS (GRATE TYPE 1) | EA. | 12 | 12 | | | | | | | | | | | |
| 9 | 615-01.12 | PRESTRESSED CONCRETE BULB TEE BEAM (6" WEB)(BT-72) | L.F. | 5,904 | | | | | | | | | | | | |
| 14 | 617-02 | BRIDGE DECK CRACK SEALING | L.F. | 1,196 | | | | | | | | | | | | |
| | 620-05.01 | CONCRETE PARAPET SINGLE SLOPE (STD-1-1SS) | L.F. | 2,466 | | | | | | | | | | | | |
| 10 | 625-02.01 | DRILLED SHAFT - SOIL (5'-0" DIA.) | V.F. | 353 | | | 23 | 68 | 65 | 60 | 59 | 60 | 13 | 5 | | |
| 12 10 | 625-02.13 | DRILLED SHAFT - ROCK (5'-0" DIA.) | V.F. | 250 | | | 28 | 28 | 28 | 28 | 28 | 28 | 54 | 28 | | |
| | 625-02.25 | DRILLED SHAFT CASING - PERMANENT (5'-0" DIA.) | V.F. | 79 | | | | | | | | | 61 | 18 | | |
| | 625-02.40 | DRILLED SHAFT CONCRETE | C.Y. | 462 | | | 37 | 69 | 67 | 64 | 63 | 64 | 65 | 33 | | |
| 11 | 625-02.46 | SONIC LOGGING TESTING | EA. | 16 | | | 2 | 2 | 2 | 2 | 2 | 2 | 2 | 2 | | |
| 7 | 710-09.01 | 6" PERFORATED PIPE WITH VERTICAL DRAIN SYSTEM | L.F. | 140 | | 70 | | | | | | | | | 70 | |
| | 710-09.02 | 6" PIPE UNDERDRAIN | L.F. | 40 | | 20 | | | | | | | | | 20 | |

1 NOTE: PRIOR TO CONSTRUCTION OF THE PAVEMENT AT BRIDGE ENDS, THE CONTRACTOR SHALL SUBMIT A PROPOSED BILL OF STEEL TO THE ENGINEER FOR APPROVAL.

2 NOTE: LUMP SUM: TO INCLUDE COMPLETE REMOVAL OF EXISTING BRIDGE NO. 41-SR050-14.04 AND APPROACHES TO NATURAL GROUND BETWEEN STA. 30+90.00 AND STA. 43+20.00. EXISTING BRIDGE CONSIST OF: 33 CONCRETE DECK GIRDER APPROACH SPANS AT 30'-6" WIDE TOTALING 965'-11" LONG AND 1 STEEL TRUSS SPAN AT 31'-5" WIDE AND 240'-11" LONG.

3 EXCAVATION BASED ON FINAL PROFILE AT ABUTMENTS.

4 NOTE: GRANULAR BACKFILL SHALL BE CLASS "A" GRADING "D" MATERIAL. SEE STANDARD DRAWING NO. STD-10-1.

5 NOTE: THE COST OF BITUMINOUS-FIBERBOARD AND ALL MISCELLANEOUS JOINT MATERIALS TO BE INCLUDED IN THE UNIT PRICE BID FOR OTHER ITEMS.

6 NOTE: INTERMEDIATE DIAPHRAGMS SHALL BE PAID FOR IN ACCORDANCE WITH STANDARD DRAWING STD-14-1. USE ALTERNATE INTERMEDIATE STRUCTURAL STEEL DIAPHRAGMS ONLY.

7 NOTE: COST OF POLYETHYLENE SHEETING AND ALL MISCELLANEOUS ITEMS NECESSARY FOR INSTALLATION TO BE INCLUDED IN THE UNIT PRICE BID FOR PERFORATED PIPE.

8 NOTE: THE COST OF ALL MATERIALS AND LABOR NECESSARY FOR THE INSTALLATION OF 120 ANCHOR BOLT ASSEMBLIES SHALL BE INCLUDED IN THE UNIT PRICE BID FOR CLASS "A" CONCRETE (BRIDGES), ITEM NO. 604-03.01. SEE NOTE ON DWG. NO. U-52-12.

9 NOTE: COST OF ELASTOMERIC PADS AND RUBBER BONDING CEMENT TO BE INCLUDED IN THE UNIT PRICE BID FOR THE PRESTRESSED BEAM.

10 NOTE: THE COST OF THE FOLLOWING ITEMS IS TO BE INCLUDED IN THE UNIT PRICE BID FOR ITEMS 625-02.01 AND 625-02.13:
1. DRILLING THE SHAFT
2. CLEANING AND INSPECTING THE SHAFT
3. TELEVISION CAMERA INSPECTION OF THE SHAFT WALLS AND ROCK SOCKET SURFACES.
4. INSTALLATION OF ALL CASING
5. SETTING OF ALL SHAFT REINFORCING
6. CONCRETE CORING (1 PER SHAFT)
7. INSTALLATION OF 1½" DIAMETER PIPES IN SHAFTS FOR CSL TESTING
8. TEMPORARY CASING

11 NOTE: THE CSL TESTING FIRM MUST BE PRESENT FOR ALL SHAFT POURS.

12 NOTE: SEE ARTICLE 625.31 OF THE SPECIAL PROVISIONS. THE INTENT IS FOR THE CORE DRILLING AND SAMPLING TO BE PERFORMED PRIOR TO SHAFT DRILLING. SUBJECT TO THE APPROVAL FROM THE GEO-TECHNICAL DIVISION ENGINEER, THESE CORES ARE TO BE USED TO PRE-DETERMINE ACCEPTABLE SHAFT TIP ELEVATIONS. CORES SHALL EXTEND 10' BELOW ESTIMATED TIP ELEVATIONS SHOWN ON THE PLANS.
1 CORE IS REQUIRED PER SHAFT.
UPON APPROVAL OF THE GEO-TECHNICAL DIVISION, THE ROD SOUNDINGS REQUIRED BY ARTICLE 625.30 OF THE SPECIAL PROVISIONS AND PAID FOR UNDER ITEM 204-05, ROCK DRILLING (BRIDGES), MAY BE OMITTED.

13 NOTE: MECHANICAL BAR SPLICERS MUST BE ON THE QUALIFIED PRODUCTS LIST 27 MAINTAINED BY THE DIVISION OF MATERIALS AND TESTS. THE BAR SPLICER SHALL MEET AASHTO STANDARD SPECIFICATIONS FOR MECHANICAL CONNECTION. WHEN EPOXY COATING IS REQUIRED, THE EXPOSED THREADS SHALL BE REPAIRED AFTER SPLICING ACCORDING TO SECTION 907 OF THE STANDARD SPECIFICATIONS. THE COST OF FURNISHING THE BAR SPLICERS, (AND EPOXY COATING WHEN REQUIRED) INCLUDING ALL LABOR AND MATERIALS NECESSARY FOR COMPLETE INSTALLATION, SHALL BE INCLUDED IN THE UNIT PRICE BID FOR ITEM NO. 604-03.02.

14 NOTE: INCLUDES ALL COST FOR FURNISHING THE SEALER MATERIAL AND INSTALLING THE BRIDGE DECK CRACK SEALER (HMWM) INCLUDING CRACK PREPARATION, CLEANING, LABOR, AND ALL MISCELLANEOUS MATERIALS REQUIRED TO SEAL THE LONGITUDINAL CONSTRUCTION JOINT ACCORDING TO SPECIAL PROVISION 604CR AND MANUFACTURERS' SPECIFICATIONS. CRACK SEALING SHALL BE DONE AT THE END OF CONSTRUCTION TO ALLOW SHRINKAGE OF DECK CONCRETE CAUSING THE CRACK TO OCCUR.

15 NOTE: THE UNIT PRICE BID FOR THE STEEL POINTS SHALL INCLUDE FURNISHING AND INSTALLATION TO THE PILES.

16 NOTE: THE CONTRACTOR IS TO HAVE THE STABILITY OF THE SHAFT CAGE VERIFIED BY A REGISTERED ENGINEER.

17 NOTE: FOUNDATION FOR ABUTMENT NO. 2 SHALL BE EXCAVATED TO THE BOTTOM OF THE ABUTMENT BEAM. ROD SOUNDINGS SHALL THEN BE MADE AS DIRECTED BY THE ENGINEER. FROM THE RESULTS OBTAINED, THE ENGINEER WILL DECIDE IF ITEM NO. 204-02.30 IS NEEDED OR IF PILES MAY BE DRIVEN TO BEARING. SEE DETAIL ON DWG. NO. U-52-20 & U-52-21.

STATE OF TENNESSEE
DEPARTMENT OF TRANSPORTATION

ESTIMATED QUANTITIES
ALTERNATE "B"
STATE ROUTE 50
OVER DUCK RIVER
STATION 37+10.00
LOG MILE 14.04
HICKMAN COUNTY
2014

HAROLD M. BROOKS, JR. REGISTERED ENGINEER AGRICULTURE STATE OF TENNESSEE

CORRECT _____ ENGINEER OF STRUCTURES

U-52-7

DESIGNED BY E. SLAYTON DATE 04-11
DRAWN BY ANGELA HUNTER DATE 04-11
SUPERVISED BY M.B.C./H.M.B. DATE 04-11
CHECKED BY E. SLAYTON DATE 04-14

cadgnspec
07-09-09
Time

DAT1008.DGN

PIN: 105351.00
CONST. NO. 41056-3217-94

| PROJECT NO. | YEAR | SHEET NO. |
|---|---|---|
| BR-STP-50(29) | 2014 | |

REVISIONS

| NO. | DATE | BY | BRIEF DESCRIPTION |
|---|---|---|---|
| | | | |
| | | | |
| | | | |

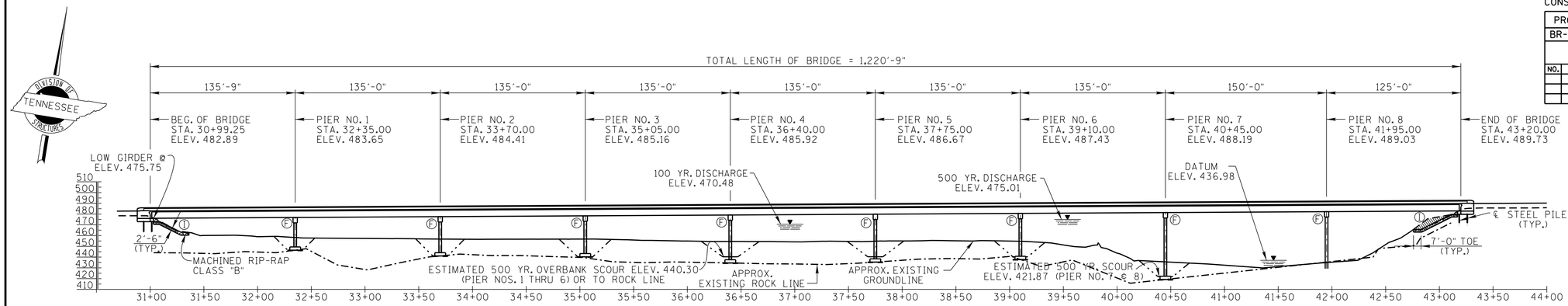


ⒾDENOTES INTEGRAL.
ⒻDENOTES FIXED.
ⒺDENOTES EXPANSION.
HATCHED AREA TO BE EXCAVATED AND PAID FOR AS A ROADWAY ITEM.

ELEVATION VIEW

REQUIRED:
1) SUFFICIENT GROUND AND CORING INFORMATION FOR BRIDGE FOUNDATION.
2) APPROXIMATE EXISTING GROUND LINE AND ROCK LINE.

BENCHMARKS:

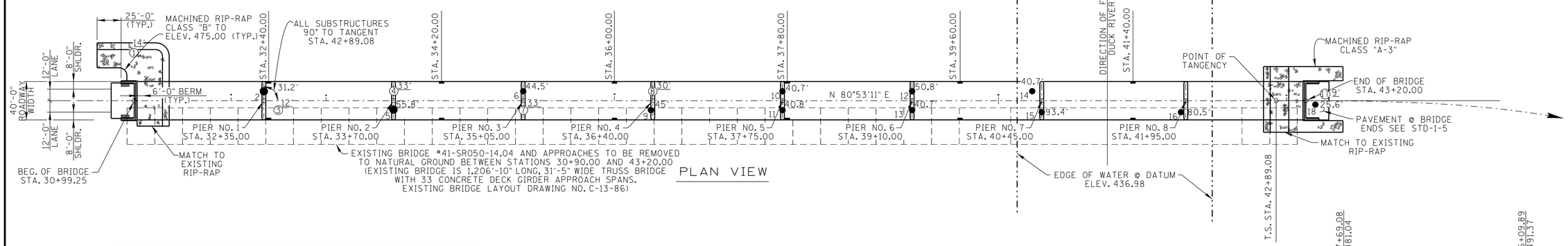


PLAN VIEW

| BORING NO. | STATION | OFFSET | GROUND ELEV. | ROCK ELEV. |
|---|---|---|---|---|
| 1 | 30+99 | 50'LT | 463.1 | 449.1 |
| 2 | 32+35 | 9.8'LT | 457.3 | 446.5 |
| 3 | 32+50 | 9.8'RT | 458.0 | 446.0 |
| 4 | 33+70 | 9.8'LT | 455.4 | 422.4 |
| 5 | 33+70 | 9.8'RT | 457.2 | 422.8 |
| 6 | 35+05 | 9.8'LT | 455.1 | 423.4 |
| 7 | 35+05 | 9.8'RT | 456.8 | 423.8 |
| 8 | 36+40 | 9.8'LT | 454.1 | 424.1 |
| 9 | 36+38 | 9.8'RT | 454.8 | 424.6 |
| 10 | 37+75 | 9.8'LT | 454.6 | 424.6 |
| 11 | 37+75 | 9.8'RT | 454.9 | 426.4 |
| 12 | 39+10 | 9.8'LT | 455.3 | 424.3 |
| 13 | 39+10 | 9.8'RT | 453.2 | 424.0 |
| 14 | 40+35 | 9.8'LT | 425.5 | 420.4 |
| 15 | 40+45 | 12'RT | 426.1 | 418.7 |
| 16 | 41+90 | 12'RT | 430.6 | 428.0 |
| 17 | 43+40 | 7'LT | 483.0 | 474.0 |
| 18 | 43+30 | 4'RT | 486.1 | 474.8 |

REQUIRED:
1) SUFFICIENT GROUND AND CORING INFORMATION FOR BRIDGE FOUNDATION.
2) APPROXIMATE EXISTING GROUND LINE AND ROCK LINE.

BENCHMARKS:
TBM NO. 7: SPIKE IN PP#36
STA.
EL.

TBM NO. 8: SPIKE IN PP#33 5B
STA.
EL.

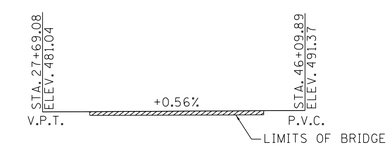


GRADE SKETCH
(STATE ROUTE 50)
N.T.S.

NOTE: THIS DRAWING IS FOR FOUNDATION DATA ONLY AND IS NOT TO BE USED AS A LAYOUT.

2029 ADT = 3,200
40'-0" ROADWAY WITH STD-1-ISS BRIDGERAIL
DESIGN SPEED = 50 mph

STATE OF TENNESSEE
DEPARTMENT OF TRANSPORTATION
FOUNDATION DATA
STATE ROUTE 50
OVER
DUCK RIVER
BRIDGE ID. NO. 41SR0500009
STATION 37+10.00
LOG MILE 14.04
HICKMAN COUNTY
2014

CORRECT Wayne G. Sieger
ENGINEER OF STRUCTURES

DESIGNED BY E. SLAYTON DATE 06-10
DRAWN BY ANGELA HUNTER DATE 06-10
SUPERVISED BY M.B.C./H.M.B. DATE 06-10
CHECKED BY DATE

U-52-8

DAT1008.DGN

PIN: 105351.00
CONST. NO. 41056-3217-94

| PROJECT NO. | YEAR | SHEET NO. |
|---|---|---|
| BR-STP-50(29) | 2014 | |

REVISIONS

| NO. | DATE | BY | BRIEF DESCRIPTION |
|---|---|---|---|
| | | | |
| | | | |
| | | | |

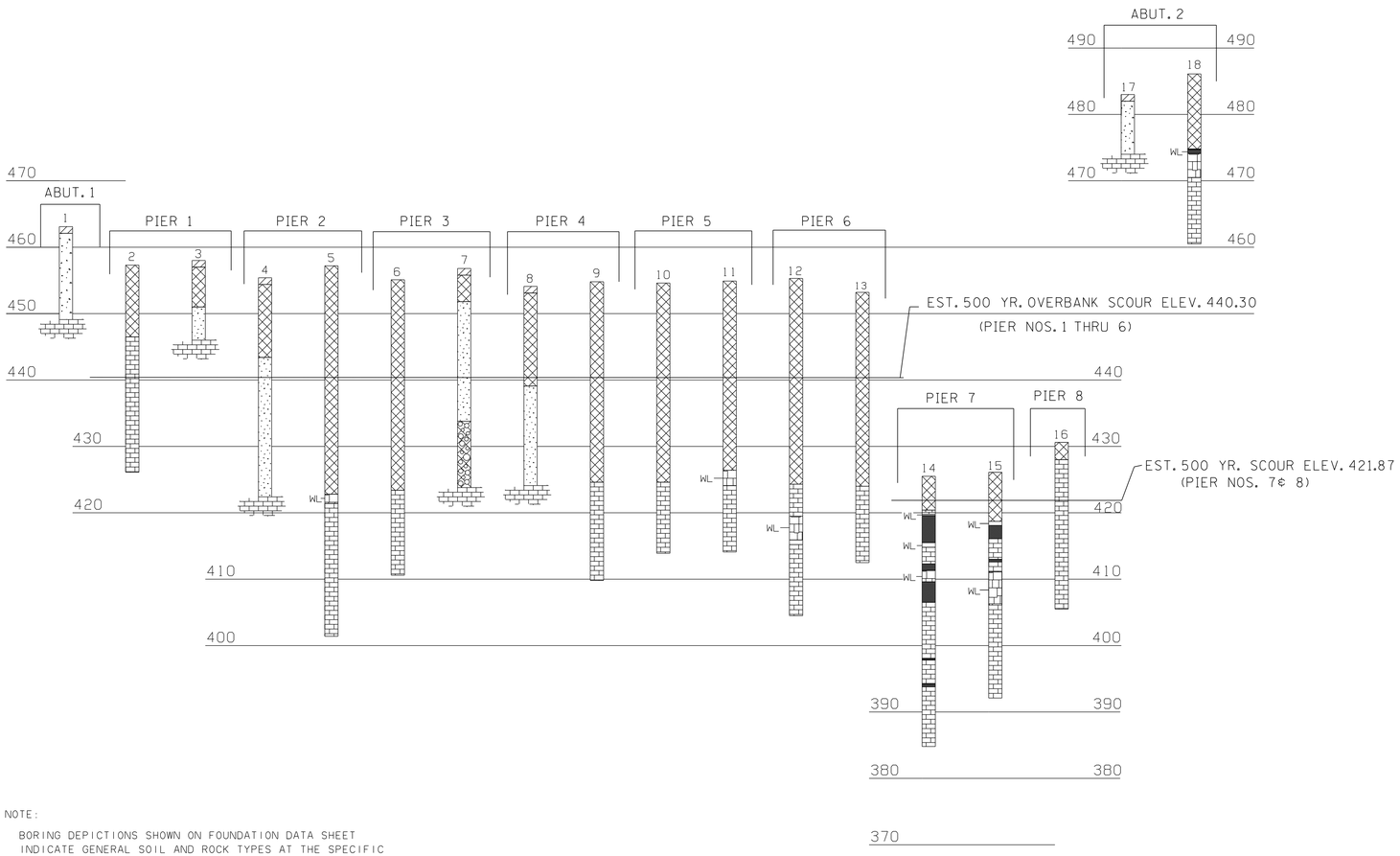


— LEGEND —

- CAVITY
- TOPSOIL
- CHERTY CLAY
- CLAY
- CLAY WITH GRAVEL
- WL — LIMESTONE (HEAVILY WEATHERED)
- LIMESTONE (SLIGHTLY TO MODERATELY WEATHERED)

HOLE NO 1 — 14' TERMINATED DEPTH

2 — CORE SAMPLE

NOTE:

BORING DEPICTIONS SHOWN ON FOUNDATION DATA SHEET INDICATE GENERAL SOIL AND ROCK TYPES AT THE SPECIFIC BORING LOCATIONS.

TO ASSIST IN BID PREPARATION FOR FOUNDATION CONSTRUCTION, DETAIL ROCK AND SOIL DESCRIPTION AND ROCK SAMPLES MAY BE AVAILABLE FOR INSPECTION.

NOTE: THIS DRAWING IS FOR FOUNDATION DATA ONLY AND IS NOT TO BE USED AS A LAYOUT.

2029 ADT = 3,200
40'-0" ROADWAY WITH STD-1-1SS BRIDGERAIL
DESIGN SPEED = 50 mph

STATE OF TENNESSEE
**DEPARTMENT OF TRANSPORTATION**

# FOUNDATION DATA
# STATE ROUTE 50
# OVER
# DUCK RIVER
# BRIDGE ID. NO. 41SR0500009
# STATION 37+10.00
# LOG MILE 14.04
# HICKMAN COUNTY
# 2014

CORRECT Wayne G. Sieger
ENGINEER OF STRUCTURES

| | | | |
|---|---|---|---|
| DESIGNED BY | E. SLAYTON | DATE | 06-10 |
| DRAWN BY | ANGELA HUNTER | DATE | 06-10 |
| SUPERVISED BY | M.B.C./H.M.B. | DATE | 06-10 |
| CHECKED BY | | DATE | |

SUP1008.DGN

| PIN | 105351.00 |
|---|---|
| CONST. NO. | 41056-3217-94 |

| PROJECT NO. | YEAR | SHEET NO. |
|---|---|---|
| BR-STP-50(29) | 2014 | |

REVISIONS

| NO. | DATE | BY | BRIEF DESCRIPTION |
|---|---|---|---|
| | | | |

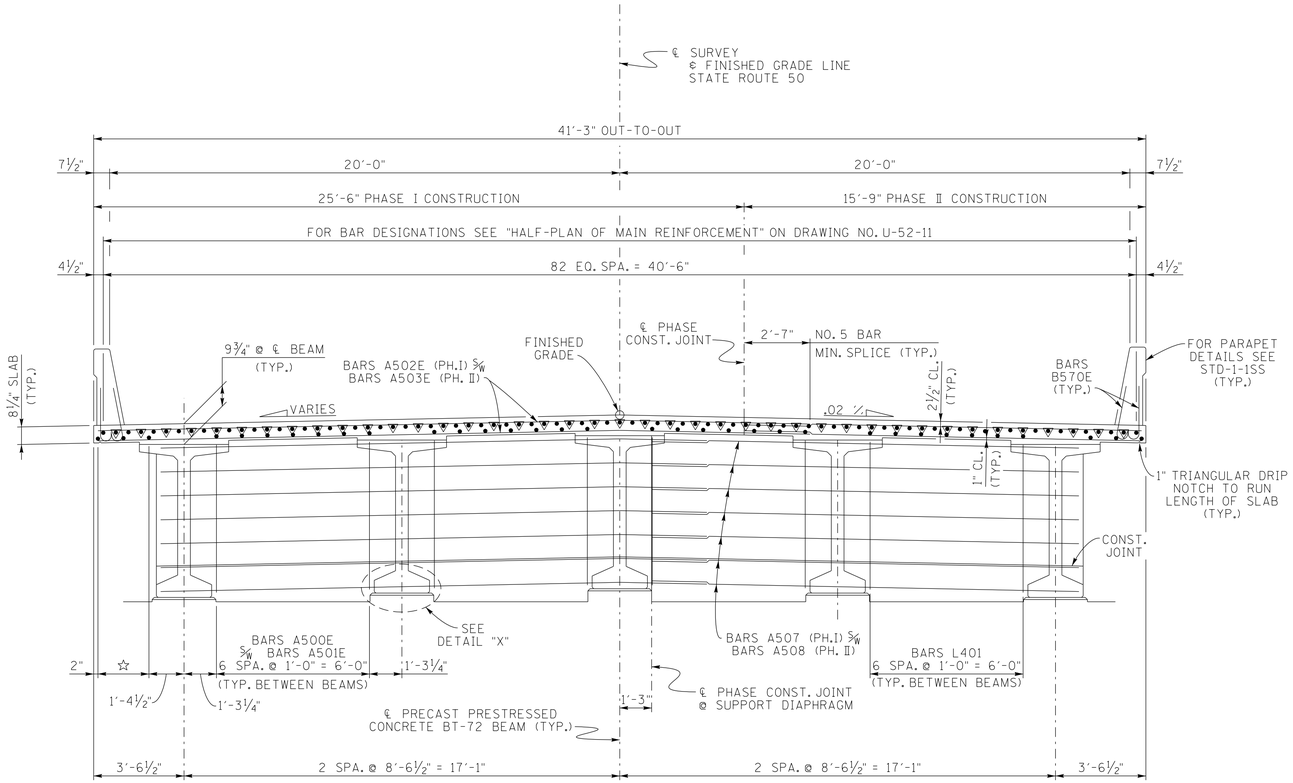


TYPICAL CROSS SECTION

(LOOKING FORWARD ON SURVEY)

NOTE: THE CONTRACTOR SHALL OFFSET ANY REINFORCEMENT NECESSARY TO MAINTAIN 2" CLEARANCE TO PHASE CONSTRUCTION JOINT.

NOTE: SEE SHEET U-52-13 FOR "PHASE TRAFFIC ℄ CONSTRUCTION SEQUENCE."

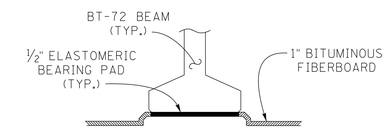


DETAIL "X"

NOTE: NO PORTION OF THE PARAPET SHALL BE POURED UNTIL THE ENTIRE DECK SLAB IS IN PLACE.

NOTE: OUTSIDE EDGE OF SLAB AND BRIDGE RAIL TO CONFORM TO HORIZONTAL CURVE.

NOTE: WHEN POURING SLAB, PROVISIONS SHALL BE MADE FOR SETTING REINFORCING STEEL FOR PARAPET. THE PARAPET SHALL NOT BE POURED UNTIL THE SLAB IS POURED AND CURED. ALSO SEE DRAWING NO. STD-1-1SS.

NOTE: THE CONTRACTOR IS SOLELY RESPONSIBLE FOR SUPPORTING THE BEAMS TO PREVENT DAMAGE DUE TO TWISTING OR OVERTURNING DURING ALL PHASES OF CONSTRUCTION. IT IS STRONGLY RECOMMENDED THAT THE TEMPORARY ERECTION DIAPHRAGMS BE INSTALLED AND THE PERMANENT INTERMEDIATE DIAPHRAGMS BE POURED AND CURED PRIOR TO PLACING ANY LOADS ON THE GIRDERS. HOWEVER, TEMPORARY ERECTION DIAPHRAGMS AND PERMANENT INTERMEDIATE DIAPHRAGMS MUST BE IN PLACE IN THE SPAN AT THE TIME THE SLAB IS POURED IN SAID SPAN.

NOTE: THE SUPPORT DIAPHRAGMS AT THE PIERS SHALL BE FORMED AND THE BOTTOM 15 INCHES POURED AS SOON AS POSSIBLE AFTER THE BEAMS HAVE BEEN SET. THE REMAINDER OF THE DIAPHRAGM SHALL BE POURED CONCURRENTLY WITH THE DECK SLAB. THE BEAMS SHALL ATTAIN AN AGE OF AT LEAST 90 DAYS PRIOR TO POURING THE REMAINDER OF THE SUPPORT DIAPHRAGMS AND DECK SLAB. ALL DIAPHRAGM CONCRETE SHALL BE INCLUDED IN THE QUANTITY FOR ITEM NO. 604-03.09.

DENOTES: CUT-OFF BARS

☆ DENOTES: BARS A500E 5/8" BARS A501E 2 SPA. @ 1'-0" = 2'-0" (TYP. @ CANT.)

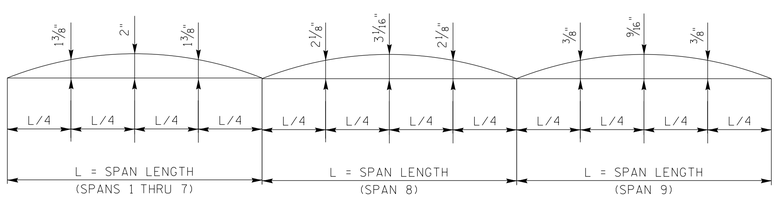


DEAD LOAD CORRECTION CURVE

DEAD LOAD CORRECTION CURVE: THIS CURVE IS FOR DEAD LOAD SLAB AND ALL DEAD LOADS THAT ARE APPLIED AFTER SLAB IS IN PLACE. IF PRESTRESSED DECK PANELS ARE USED AND THE BEAMS ARE PROFILED AFTER PANELS ARE IN PLACE, REDUCE THE DEAD LOAD CORRECTION VALUES SHOWN BY 25%.

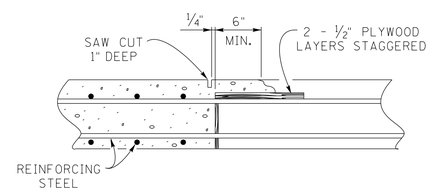


SLAB CONSTRUCTION JOINT DETAIL

DECK CONCRETE POURING SEQUENCE: SLAB CONSTRUCTION JOINTS MAY BE LOCATED AT THE CONTRACTOR'S OPTION SUBJECT TO THE FOLLOWING:

1) NO CONSTRUCTION JOINT MAY BE LOCATED CLOSER THAN 10 FEET OR FURTHER THAN 15 FEET FROM AN INTERIOR SUPPORT.
2) THE SLAB IN THE MIDDLE SECTION OF BOTH ADJACENT SPANS MUST BE POURED TO WITHIN AT LEAST 15 FEET OF THE SUPPORTS EITHER PRIOR TO OR CONCURRENTLY WITH THE SLAB OVER AN INTERIOR SUPPORT.

ALL SLAB CONSTRUCTION JOINTS SHALL BE IN ACCORDANCE WITH THE SLAB CONSTRUCTION JOINT DETAIL SHOWN ABOVE.

ESTIMATED QUANTITIES

| CLASS 'D' CONCRETE (BRIDGE DECK) C.Y. | STEEL BAR REINFORCEMENT (BRIDGES) LBS. | EPOXY COATED REINFORCING STEEL LBS. |
|---|---|---|
| 1,451 | 6,955 | 474,129 |

STATE OF TENNESSEE
DEPARTMENT OF TRANSPORTATION

SUPERSTRUCTURE
STATE ROUTE 50
OVER
DUCK RIVER
STATION 37+10.00
LOG MILE 14.04
HICKMAN COUNTY
2014

HARDIE M. BROOKS, JR. REGISTERED ENGINEER AGRICULTURE STATE OF TENNESSEE

CORRECT Wayne G. Tyger
ENGINEER OF STRUCTURES

| | | | |
|---|---|---|---|
| DESIGNED BY | ERIC SLAYTON | DATE | 03-11 |
| DRAWN BY | T. WISEMAN | DATE | 03-11 |
| SUPERVISED BY | MBC / HMB | DATE | 03-11 |
| CHECKED BY | ERIC SLAYTON | DATE | --- |

U-52-10

SUP1008.DGN

PIN 105351.00
CONST. NO. 41056-3217-94

| PROJECT NO. | YEAR | SHEET NO. |
|---|---|---|
| BR-STP-50(29) | 2014 | |

REVISIONS

| NO. | DATE | BY | BRIEF DESCRIPTION |
|---|---|---|---|
| | | | |

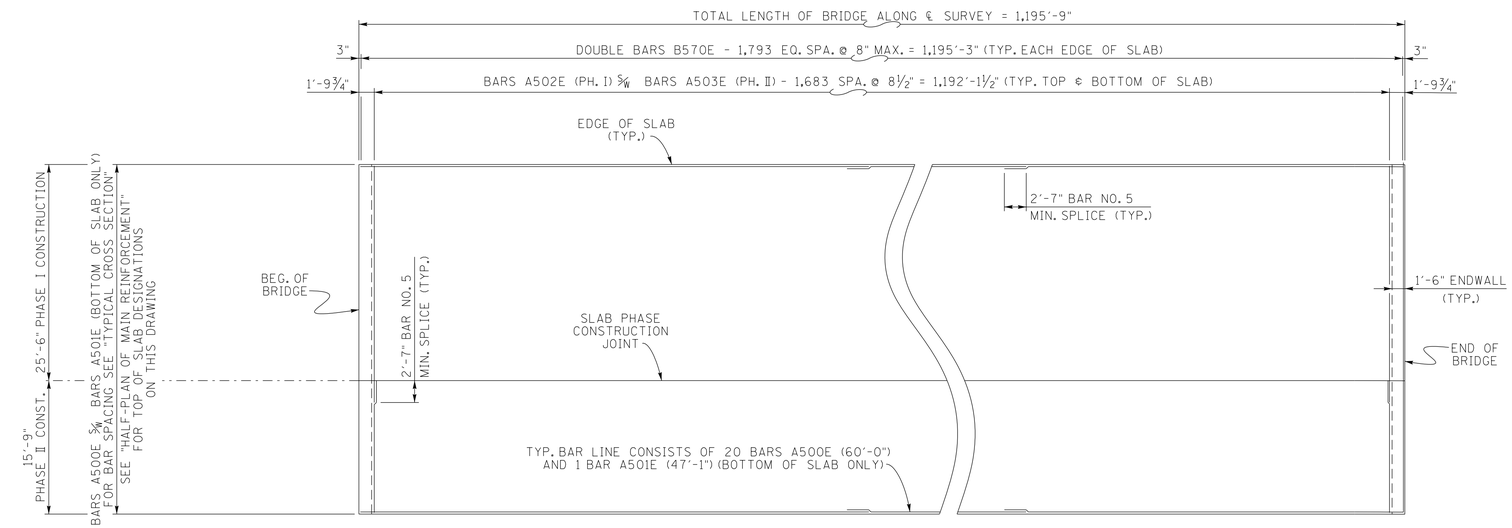


SLAB PLAN

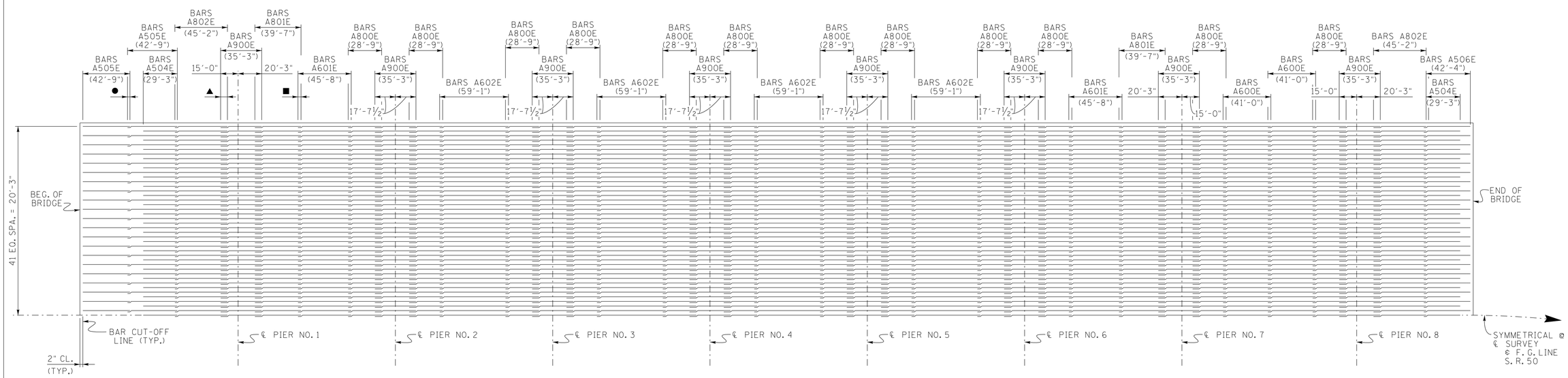


HALF-PLAN OF MAIN REINFORCEMENT

● DENOTES: 2'-1" MIN. BAR NO. 5 SPLICE
▲ DENOTES: 5'-10" MIN. BAR NO. 8 SPLICE
■ DENOTES: 2'-7" MIN. BAR NO. 6 SPLICE

STATE OF TENNESSEE
DEPARTMENT OF TRANSPORTATION

# SUPERSTRUCTURE DETAILS
STATE ROUTE 50
OVER
DUCK RIVER
STATION 37+10.00
LOG MILE 14.04
HICKMAN COUNTY
2014

HARDIE M. BROOKS, JR. STATE OF TENNESSEE

CORRECT Wayne A. Sager
ENGINEER OF STRUCTURES

DESIGNED BY ERIC SLAYTON DATE 03-11
DRAWN BY T. WISEMAN DATE 03-11
SUPERVISED BY MBC / HMB DATE 03-11
CHECKED BY ERIC SLAYTON DATE --

U-52-11

SUP1008.DGN

PIN 105351.00
CONST. NO. 41056-3217-94

| PROJECT NO. | YEAR | SHEET NO. |
|---|---|---|
| BR-STP-50(29) | 2014 | |

REVISIONS

| NO. | DATE | BY | BRIEF DESCRIPTION |
|---|---|---|---|
| | | | |

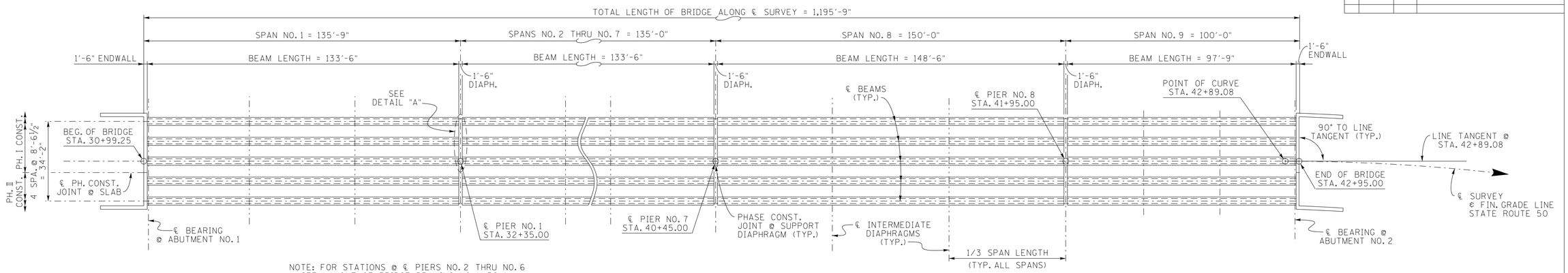


NOTE: FOR STATIONS @ ℄ PIERS NO. 2 THRU NO. 6 SEE LAYOUT OF BRIDGE DRAWING NO. U-52-1.

FRAMING PLAN

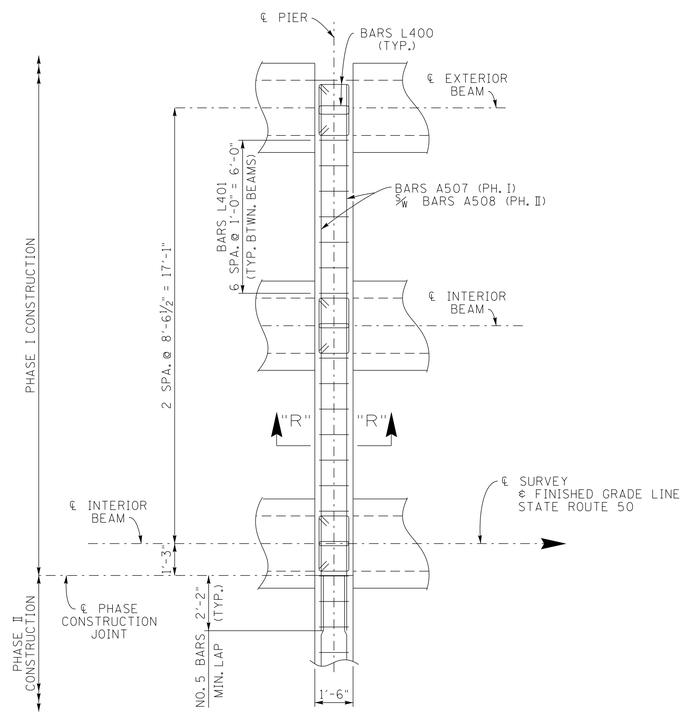


DETAIL "A"
(TYP. EACH PIER)

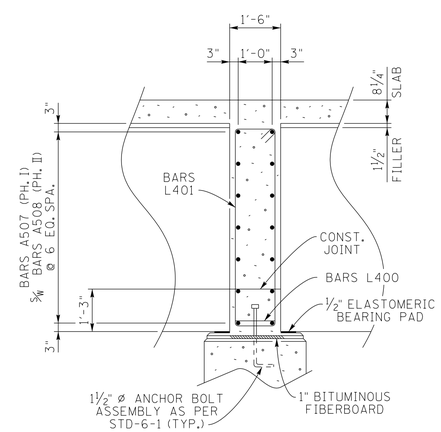


SECTION "R-R"
(TYP. EACH PIER)

SPECIAL NOTE FOR ANCHOR BOLTS AT PIERS:
ANCHOR BOLT ASSEMBLIES AT PIER SHALL BE IN ACCORDANCE WITH STANDARD DRAWING STD-6-1.
ALL MATERIALS AND DIMENSIONS SHOULD BE ADJUSTED TO ACCOMODATE 1½" BOLTS.

STATE OF TENNESSEE
DEPARTMENT OF TRANSPORTATION

SUPERSTRUCTURE DETAILS
STATE ROUTE 50
OVER
DUCK RIVER
STATION 37+10.00
LOG MILE 14.04
HICKMAN COUNTY
2014

HARDIE M. BROOKS, JR. STATE OF TENNESSEE

CORRECT Wayne A. Tapp
ENGINEER OF STRUCTURES

| | | | |
|---|---|---|---|
| DESIGNED BY | ERIC SLAYTON | DATE | 03-11 |
| DRAWN BY | T. WISEMAN | DATE | 03-11 |
| SUPERVISED BY | MBC / HMB | DATE | 03-11 |
| CHECKED BY | ERIC SLAYTON | DATE | --_-- |

SUP1008.DGN

PIN 105351.00
CONST. NO. 41056-3217-94

| PROJECT NO. | YEAR | SHEET NO. |
|---|---|---|
| BR-STP-50(29) | 2014 | |

REVISIONS

| NO. | DATE | BY | BRIEF DESCRIPTION |
|---|---|---|---|
| | | | |

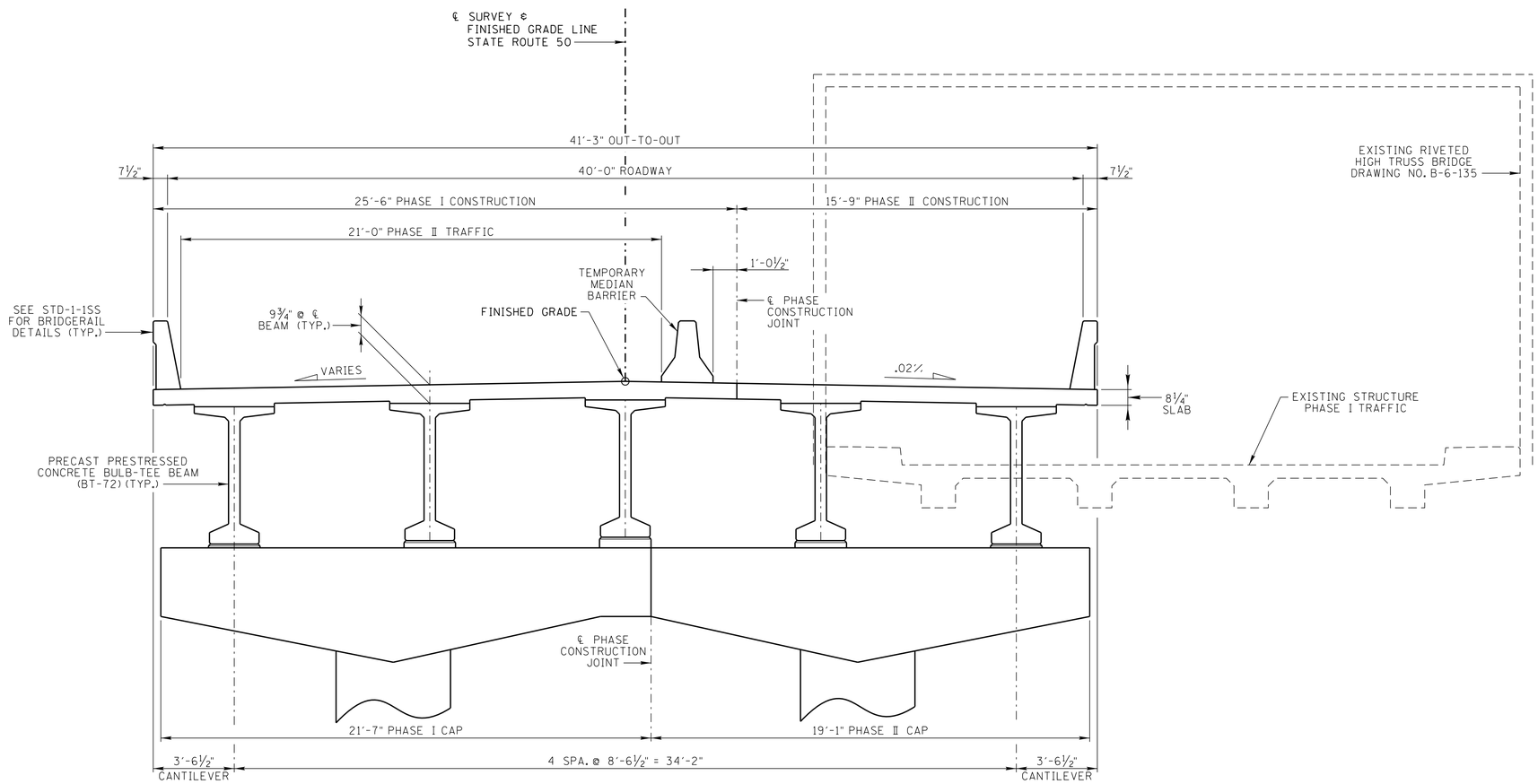


TYPICAL CROSS SECTION

(LOOKING FORWARD ON SURVEY)

STATE OF TENNESSEE
DEPARTMENT OF TRANSPORTATION

SUPERSTRUCTURE DETAILS
STATE ROUTE 50
OVER
DUCK RIVER
STATION 37+10.00
LOG MILE 14.04
HICKMAN COUNTY
2014

HARDIE M. BROOKS, JR. STATE OF TENNESSEE

CORRECT Wayne J. Tapp
ENGINEER OF STRUCTURES

DESIGNED BY ERIC SLAYTON DATE 03-11
DRAWN BY T. WISEMAN DATE 03-11
SUPERVISED BY MBC / HMB DATE 03-11
CHECKED BY ERIC SLAYTON DATE --/--/--

U-52-13

SCR1008.DGN

PIN: 105351.00
CONST. NO. 41056-3217-94

| PROJECT NO. | YEAR | SHEET NO. |
|---|---|---|
| BR-STP-50(29) | 2014 | |

REVISIONS

| NO. | DATE | BY | BRIEF DESCRIPTION |
|---|---|---|---|
| | | | |

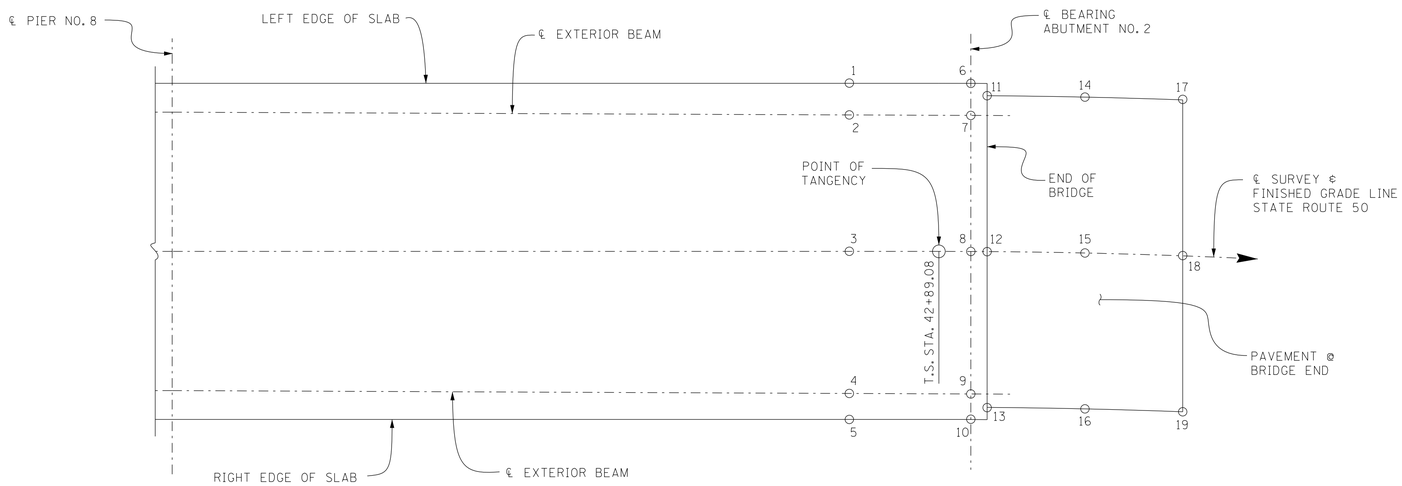


PART-PLAN

## SCREED STATIONS AND ELEVATIONS

| PT. | STATION | ELEVATION | PT. | STATION | ELEVATION |
|---|---|---|---|---|---|
| 1 | 42+83.09 | 489.11 | 11 | 42+95.00 | 489.24 |
| 2 | 42+83.09 | 489.18 | 12 | 42+95.00 | 489.59 |
| 3 | 42+83.09 | 489.54 | 13 | 42+95.00 | 489.20 |
| 4 | 42+83.09 | 489.18 | 14 | 43+06.99 | 489.39 |
| 5 | 42+83.09 | 489.11 | 15 | 43+07.00 | 489.65 |
| 6 | 42+92.88 | 489.19 | 16 | 43+07.01 | 489.27 |
| 7 | 42+92.88 | 489.25 | 17 | 43+18.97 | 489.53 |
| 8 | 42+92.88 | 489.58 | 18 | 43+19.00 | 489.72 |
| 9 | 42+92.88 | 489.23 | 19 | 43+19.03 | 489.34 |
| 10 | 42+92.88 | 489.16 | | | |

STATE OF TENNESSEE
DEPARTMENT OF TRANSPORTATION

BRIDGE SCREED
STATE ROUTE 50
OVER
DUCK RIVER
STATION 37+10.00
LOG MILE 14.04
HICKMAN COUNTY
2014

HARDIE M. BROOKS, JR.
STATE OF TENNESSEE
DEPARTMENT OF AGRICULTURE

CORRECT Wayne G. Sieger
ENGINEER OF STRUCTURES

DESIGNED BY ERIC SLAYTON DATE 03-11
DRAWN BY C. BERNATEK DATE 03-11
SUPERVISED BY MBC / HMB DATE 03-11
CHECKED BY ERIC SLAYTON DATE --11

U-52-14

TBM1008.DGN

CONST. NO. 41056-3217-94
PIN NO. 105351.00

| PROJECT NO. | YEAR | SHEET NO. |
|---|---|---|
| BR-STP-50(29) | 2014 | |

REVISIONS

| NO. | DATE | BY | BRIEF DESCRIPTION |
|---|---|---|---|
| | | | |

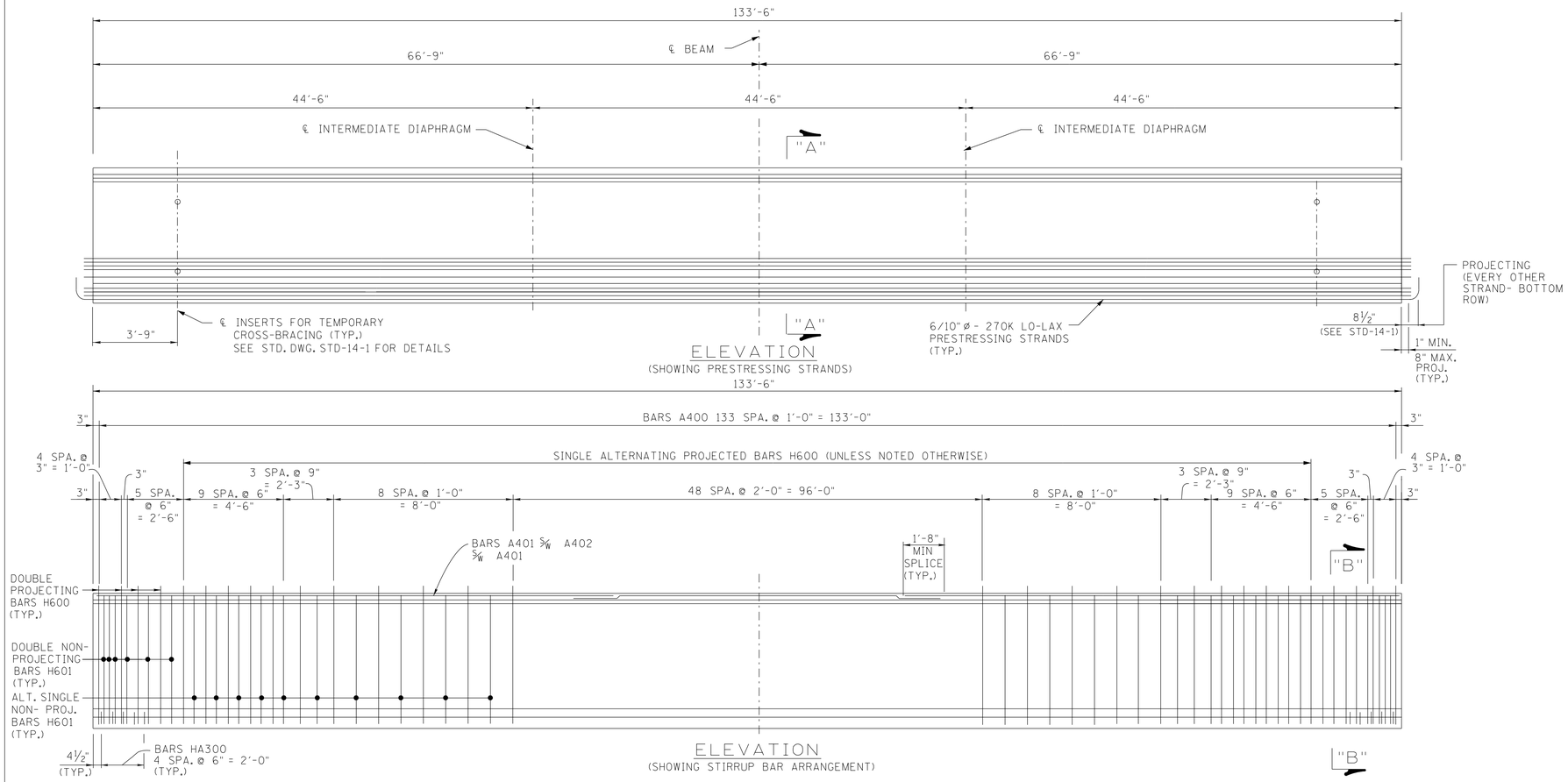


ELEVATION
(SHOWING PRESTRESSING STRANDS)

ELEVATION
(SHOWING STIRRUP BAR ARRANGEMENT)

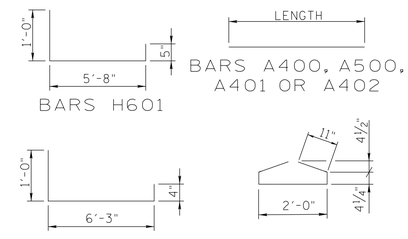


NOTES:

1. ALL BEAMS ARE BT-72.
2. THE CONCRETE FOR THIS CONSTRUCTION SHALL BE OF SUCH PROPERTIES AS TO ATTAIN A COMPRESSIVE STRENGTH OF NOT LESS THAN 9,500 PSI AT THE AGE OF 28 DAYS AND STRESS TRANSFER SHALL NOT BE MADE TO THE BRIDGE MEMBER UNTIL THE TEST SPECIMENS INDICATE THAT THE CONCRETE HAS REACHED A COMPRESSIVE STRENGTH OF AT LEAST 7,500 PSI. SEE GENERAL NOTES FOR CONCRETE FINISHING NOTE.
3. SEE STD-14-1 FOR BULB-TEE BEAM STANDARD DETAILS AND NOTES.
4. STRANDS TO BE 6/10"ø 270K LO-LAX, $A_S$ = 0.217 $IN^2$ JACKING LOAD = 44,000 LBS.
5. THE PRESTRESSED BEAMS SHALL ATTAIN AN AGE OF AT LEAST 90 DAYS PRIOR TO POURING THE SUPPORT DIAPHRAGMS (EXCLUDING BOTTOM 15 INCHES) AND DECK SLAB.

## PRESTRESSED BEAM DESIGN DATA - PER BEAM

LIVE LOAD DISTRIBUTION FACTOR (MOMENT): .825 LANES PER BEAM.
LIVE LOAD DISTRIBUTION FACTOR (SHEAR): .852 LANES PER BEAM.
COMPOSITE DEAD LOAD (DC): 150.00 LB/FT
COMPOSITE DEAD LOAD (DW): 280.00 LB/FT
COMPOSITE DESIGN SLAB (f'c = 3000 PSI)
NOTE: DOWNWARD DEFLECTION UNDER TOTAL DL IS not ALLOWED.

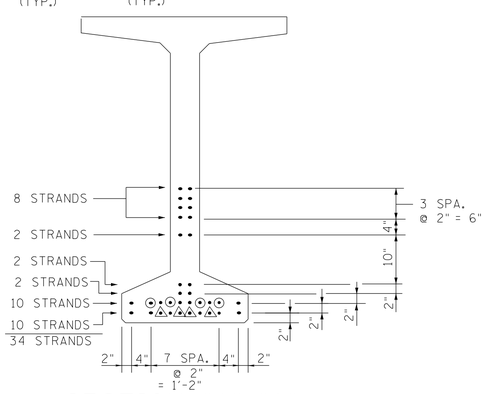


SECTION "A"-"A"

⊙ DENOTES BREAK BOND 4'-0" FROM END OF BEAM
△ DENOTES BREAK BOND 6'-0" FROM END OF BEAM

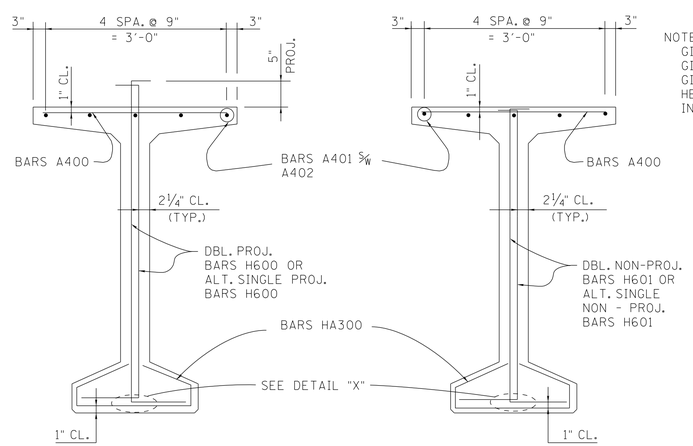


SECTION "B"-"B"

NOTE: PHASE II GIRDERS SHALL NOT BE CAST CONCURRENTLY WITH PHASE I GIRDERS. THE CONTRACTOR SHALL STAGGER THE ORDER DATE OF THE PRECAST GIRDERS SO AS TO OBTAIN GIRDERS IN PHASE II WITH THE SAME AGE AS THE GIRDERS IN THE PREVIOUS PHASE WHEN THE SLAB WAS POURED. THIS WILL HELP ALLEVIATE CAMBER GROWTH ISSUES. ALL COST INCURRED SHALL BE INCLUDED IN ITEM NO. 615-01.12.

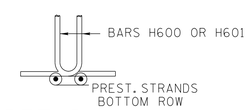


DETAIL "X"

## BILL OF STEEL
(PER BEAM)

| BAR | SIZE | NO. REQ'D | LENGTH |
|---|---|---|---|
| A400 | 4 | 134 | 3'-2" |
| A401 | 4 | 10 | 60'-0" |
| A402 | 4 | 5 | 16'-6" |
| A500 | 5 | 8 | 5'-6" |
| H600 | 6 | 85 | 7'-7" |
| H601 | 6 | 44 | 7'-1" |
| HA300 | 3 | 10 | 4'-7" |

## ESTIMATED QUANTITIES
(PER BEAM)

| NO. BEAMS REQ'D | CLASS "A" CONCRETE C.Y. | REINFORCING STEEL LB. | PRESTRESSING STRANDS (LOW RELAXATION) LB. |
|---|---|---|---|
| 35 | 26 | 2,239 | 3,409 |

STATE OF TENNESSEE
DEPARTMENT OF TRANSPORTATION
PRESTRESSED BULB-TEE BEAM DETAILS
SPAN NOS. 1 THRU 7
STATE ROUTE 50
OVER DUCK RIVER
STATION 37+10.00
LOG MILE 14.04
HICKMAN COUNTY
2014

HAROLD M. BROOKS, JR. STATE OF TENNESSEE

CORRECT Duane J. Sepi
ENGINEER OF STRUCTURES

| | | | |
|---|---|---|---|
| DESIGNED BY | E. SLAYTON | DATE | 03-10 |
| DRAWN BY | Q. BONDS | DATE | 04-11 |
| SUPERVISED BY | MBC/HMB | DATE | 04-11 |
| CHECKED BY | E. SLAYTON | DATE | 04-14 |

U-52-15

TBM1008.DGN

CONST. NO. 41056-3217-94
PIN NO. 105351.00

| PROJECT NO. | YEAR | SHEET NO. |
|---|---|---|
| BR-STP-50(29) | 2014 | |

REVISIONS

| NO. | DATE | BY | BRIEF DESCRIPTION |
|---|---|---|---|
| | | | |

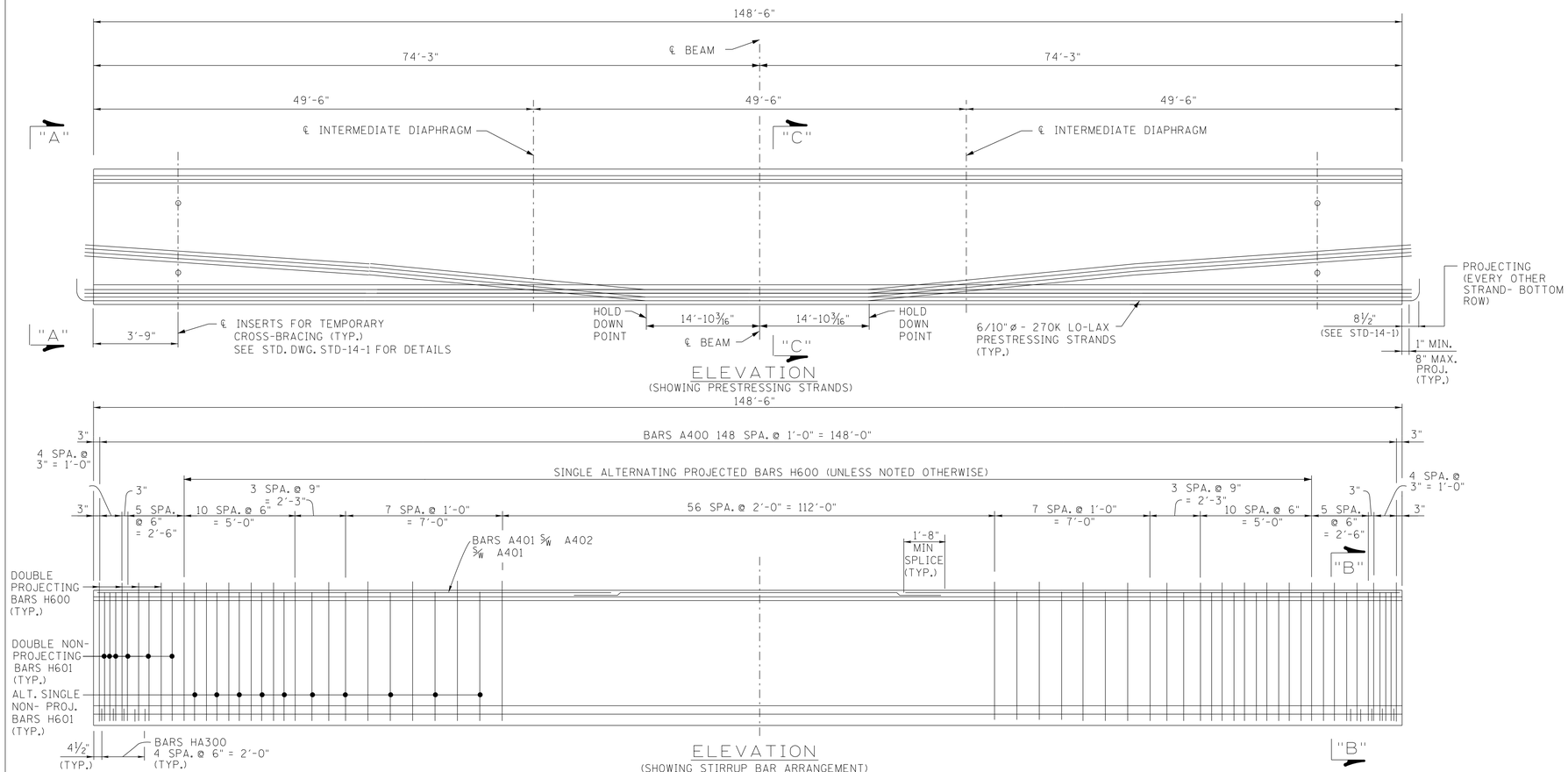


ELEVATION
(SHOWING PRESTRESSING STRANDS)

ELEVATION
(SHOWING STIRRUP BAR ARRANGEMENT)

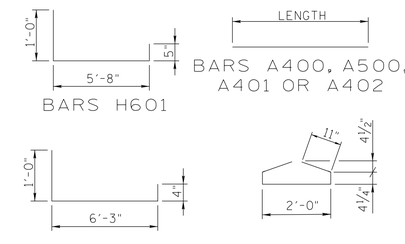


NOTES:

1. ALL BEAMS ARE BT-72.
2. THE CONCRETE FOR THIS CONSTRUCTION SHALL BE OF SUCH PROPERTIES AS TO ATTAIN A COMPRESSIVE STRENGTH OF NOT LESS THAN 9,500 PSI AT THE AGE OF 28 DAYS AND STRESS TRANSFER SHALL NOT BE MADE TO THE BRIDGE MEMBER UNTIL THE TEST SPECIMENS INDICATE THAT THE CONCRETE HAS REACHED A COMPRESSIVE STRENGTH OF AT LEAST 7,500 PSI. SEE GENERAL NOTES FOR CONCRETE FINISHING NOTE.
3. SEE STD-14-1 FOR BULB-TEE BEAM STANDARD DETAILS AND NOTES.
4. STRANDS TO BE 6/10"ø 270K LO-LAX, $A_S$ = 0.217 $IN^2$ JACKING LOAD = 44,000 LBS.
5. THE PRESTRESSED BEAMS SHALL ATTAIN AN AGE OF AT LEAST 90 DAYS PRIOR TO POURING THE SUPPORT DIAPHRAGMS (EXCLUDING BOTTOM 15 INCHES) AND DECK SLAB.

PRESTRESSED BEAM DESIGN DATA - PER BEAM

LIVE LOAD DISTRIBUTION FACTOR (MOMENT): .825 LANES PER BEAM.
LIVE LOAD DISTRIBUTION FACTOR (SHEAR): .852 LANES PER BEAM.
COMPOSITE DEAD LOAD (DC): 150.00 LB/FT
COMPOSITE DEAD LOAD (DW): 280.00 LB/FT
COMPOSITE DESIGN SLAB (f'c = 3000 PSI)
NOTE: DOWNWARD DEFLECTION UNDER TOTAL DL IS not ALLOWED.

ESTIMATED QUANTITIES
(PER BEAM)

| NO. BEAMS REQ'D | CLASS "A" CONCRETE C.Y. | REINFORCING STEEL LB. | PRESTRESSING STRANDS (LOW RELAXATION) LB. |
|---|---|---|---|
| 5 | 29 | 2,412 | 4,005 |

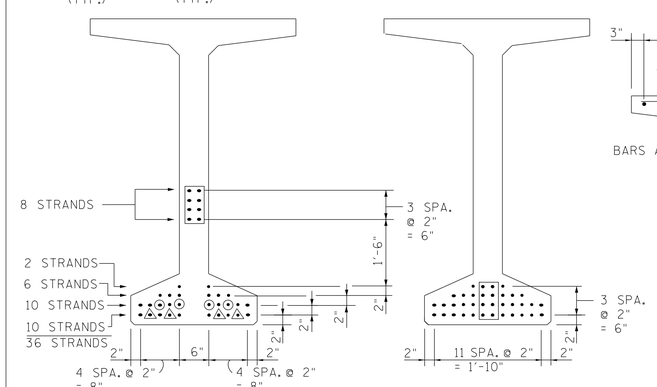


SECTION "A"-"A"
@ ENDS

⊙ DENOTES BREAK BOND 4'-0" FROM END OF BEAM
△ DENOTES BREAK BOND 6'-0" FROM END OF BEAM

SECTION "C"-"C"
@ MIDSPAN

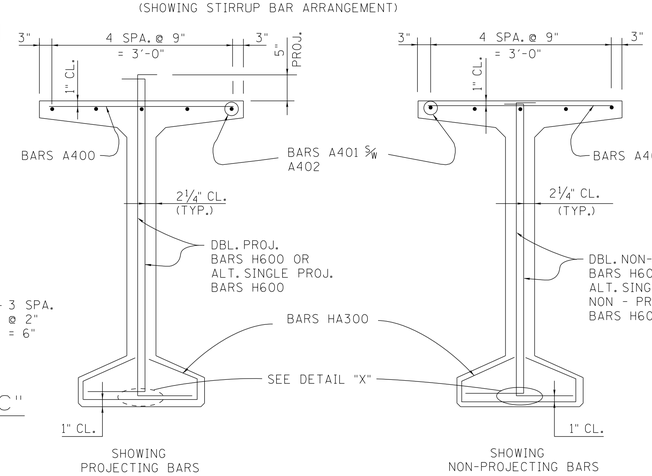


SECTION "B"-"B"

NOTE: PHASE II GIRDERS SHALL NOT BE CAST CONCURRENTLY WITH PHASE I GIRDERS. THE CONTRACTOR SHALL STAGGER THE ORDER DATE OF THE PRECAST GIRDERS SO AS TO OBTAIN GIRDERS IN PHASE II WITH THE SAME AGE AS THE GIRDERS IN THE PREVIOUS PHASE WHEN THE SLAB WAS POURED. THIS WILL HELP ALLEVIATE CAMBER GROWTH ISSUES. ALL COST INCURRED SHALL BE INCLUDED IN ITEM NO. 615-01.12.

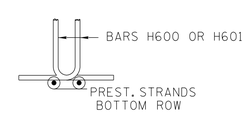


DETAIL "X"

BILL OF STEEL
(PER BEAM)

| BAR | SIZE | NO. REQ'D | LENGTH |
|---|---|---|---|
| A400 | 4 | 149 | 3'-2" |
| A401 | 4 | 10 | 60'-0" |
| A402 | 4 | 5 | 31'-6" |
| A500 | 5 | 8 | 5'-6" |
| H600 | 6 | 93 | 7'-7" |
| H601 | 6 | 44 | 7'-1" |
| HA300 | 3 | 10 | 4'-7" |

STATE OF TENNESSEE
DEPARTMENT OF TRANSPORTATION
PRESTRESSED BULB-TEE BEAM DETAILS
SPAN NO. 8
STATE ROUTE 50
OVER DUCK RIVER
STATION 37+10.00
LOG MILE 14.04
HICKMAN COUNTY
2014

HARDIE M. BROOKS, JR. STATE OF TENNESSEE 22 DEPARTMENT OF AGRICULTURE ENGINEER

CORRECT Wayne G. Sager
ENGINEER OF STRUCTURES

| | | | |
|---|---|---|---|
| DESIGNED BY | E. SLAYTON | DATE | 03-10 |
| DRAWN BY | Q. BONDS | DATE | 04-11 |
| SUPERVISED BY | MBC/HMB | DATE | 04-11 |
| CHECKED BY | E. SLAYTON | DATE | 04-14 |

U-52-16

TBM1008.DGN

CONST. NO. 41056-3217-94
PIN NO. 105351.00

| PROJECT NO. | YEAR | SHEET NO. |
|---|---|---|
| BR-STP-50(29) | 2014 | |

REVISIONS

| NO. | DATE | BY | BRIEF DESCRIPTION |
|---|---|---|---|
| | | | |

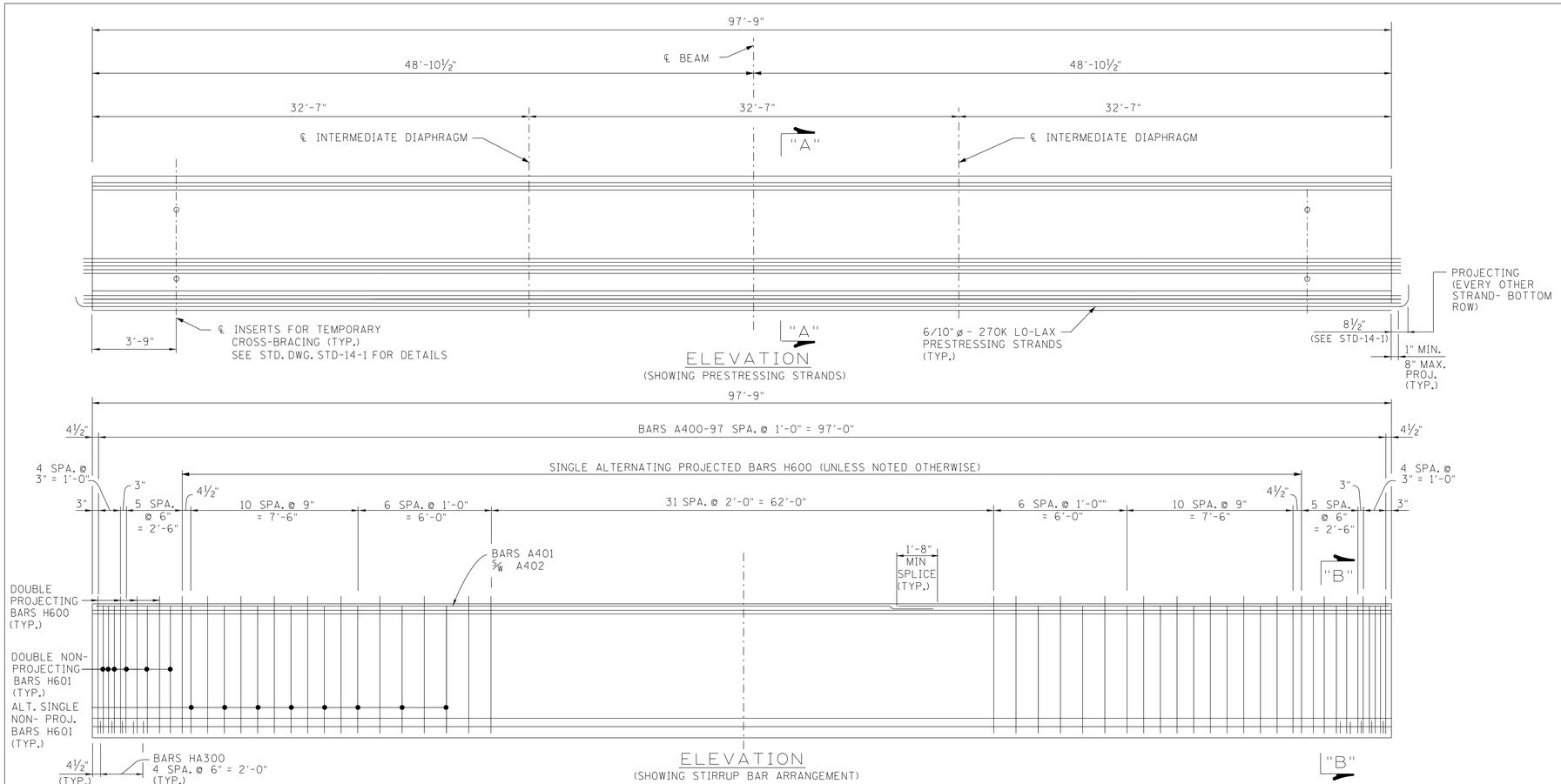


ELEVATION
(SHOWING PRESTRESSING STRANDS)

ELEVATION
(SHOWING STIRRUP BAR ARRANGEMENT)

"B"

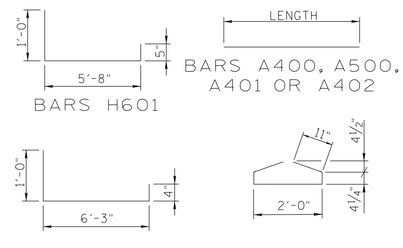


NOTES:

1. ALL BEAMS ARE BT-72.
2. THE CONCRETE FOR THIS CONSTRUCTION SHALL BE OF SUCH PROPERTIES AS TO ATTAIN A COMPRESSIVE STRENGTH OF NOT LESS THAN 9,500 PSI AT THE AGE OF 28 DAYS AND STRESS TRANSFER SHALL NOT BE MADE TO THE BRIDGE MEMBER UNTIL THE TEST SPECIMENS INDICATE THAT THE CONCRETE HAS REACHED A COMPRESSIVE STRENGTH OF AT LEAST 7,500 PSI. SEE GENERAL NOTES FOR CONCRETE FINISHING NOTE.
3. SEE STD-14-1 FOR BULB-TEE BEAM STANDARD DETAILS AND NOTES.
4. STRANDS TO BE 6/10"ø 270K LO-LAX, $A_S$ = 0.217 $IN^2$ JACKING LOAD = 44,000 LBS.
5. THE PRESTRESSED BEAMS SHALL ATTAIN AN AGE OF AT LEAST 90 DAYS PRIOR TO POURING THE SUPPORT DIAPHRAGMS (EXCLUDING BOTTOM 15 INCHES) AND DECK SLAB.

## PRESTRESSED BEAM DESIGN DATA - PER BEAM

LIVE LOAD DISTRIBUTION FACTOR (MOMENT): .825 LANES PER BEAM.
LIVE LOAD DISTRIBUTION FACTOR (SHEAR): .852 LANES PER BEAM.
COMPOSITE DEAD LOAD (DC): 150.00 LB/FT
COMPOSITE DEAD LOAD (DW): 280.00 LB/FT
COMPOSITE DESIGN SLAB (f'c = 3000 PSI)
NOTE: DOWNWARD DEFLECTION UNDER TOTAL DL IS not ALLOWED.

## ESTIMATED QUANTITIES
(PER BEAM)

| NO. BEAMS REQ'D | CLASS "A" CONCRETE C.Y. | REINFORCING STEEL LB. | PRESTRESSING STRANDS (LOW RELAXATION) LB. |
|---|---|---|---|
| 5 | 19 | 1,779 | 1,330 |

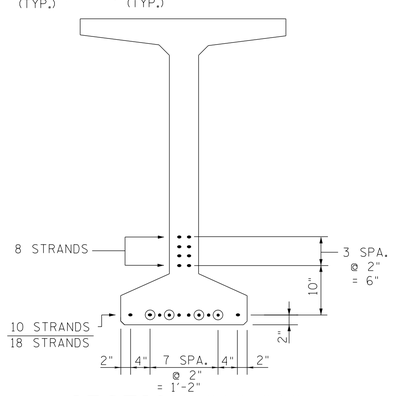


SECTION "A"-"A"

⊙ DENOTES BREAK BOND 4'-0" FROM END OF BEAM

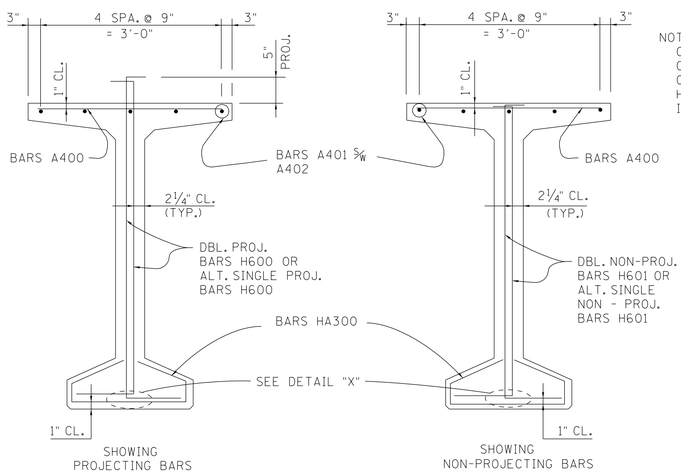


SECTION B-B

NOTE: PHASE II GIRDERS SHALL NOT BE CAST CONCURRENTLY WITH PHASE I GIRDERS. THE CONTRACTOR SHALL STAGGER THE ORDER DATE OF THE PRECAST GIRDERS SO AS TO OBTAIN GIRDERS IN PHASE II WITH THE SAME AGE AS THE GIRDERS IN THE PREVIOUS PHASE WHEN THE SLAB WAS POURED. THIS WILL HELP ALLEVIATE CAMBER GROWTH ISSUES. ALL COST INCURRED SHALL BE INCLUDED IN ITEM NO. 615-01.12.

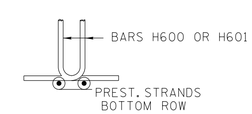


DETAIL "X"

## BILL OF STEEL
(PER BEAM)

| BAR | SIZE | NO. REQ'D | LENGTH |
|---|---|---|---|
| A400 | 4 | 98 | 3'-2" |
| A401 | 4 | 5 | 60'-0" |
| A402 | 4 | 5 | 39'-1" |
| A500 | 5 | 8 | 5'-6" |
| H600 | 6 | 66 | 7'-7" |
| H601 | 6 | 40 | 7'-1" |
| HA300 | 3 | 10 | 4'-7" |

STATE OF TENNESSEE
DEPARTMENT OF TRANSPORTATION

# PRESTRESSED BULB-TEE BEAM DETAILS
SPAN NO.9
STATE ROUTE 50
OVER DUCK RIVER
STATION 37+10.00
LOG MILE 14.04
HICKMAN COUNTY
2014

HARDIE M. BROOKS, JR. STATE OF TENNESSEE AGRICULTURE

CORRECT Wayne G. Sieger
ENGINEER OF STRUCTURES

| | | | |
|---|---|---|---|
| DESIGNED BY | E. SLAYTON | DATE | 03-10 |
| DRAWN BY | Q. BONDS | DATE | 04-11 |
| SUPERVISED BY | MBC/HMB | DATE | 04-11 |
| CHECKED BY | E. SLAYTON | DATE | 04-14 |

U-52-17

ABT1008.DGN

PIN: 105351.00
CONST. NO. 41056-3217-94

| PROJECT NO. | YEAR | SHEET NO. |
|---|---|---|
| BR-STP-50(29) | 2014 | |

REVISIONS

| NO. | DATE | BY | BRIEF DESCRIPTION |
|---|---|---|---|
| | | | |

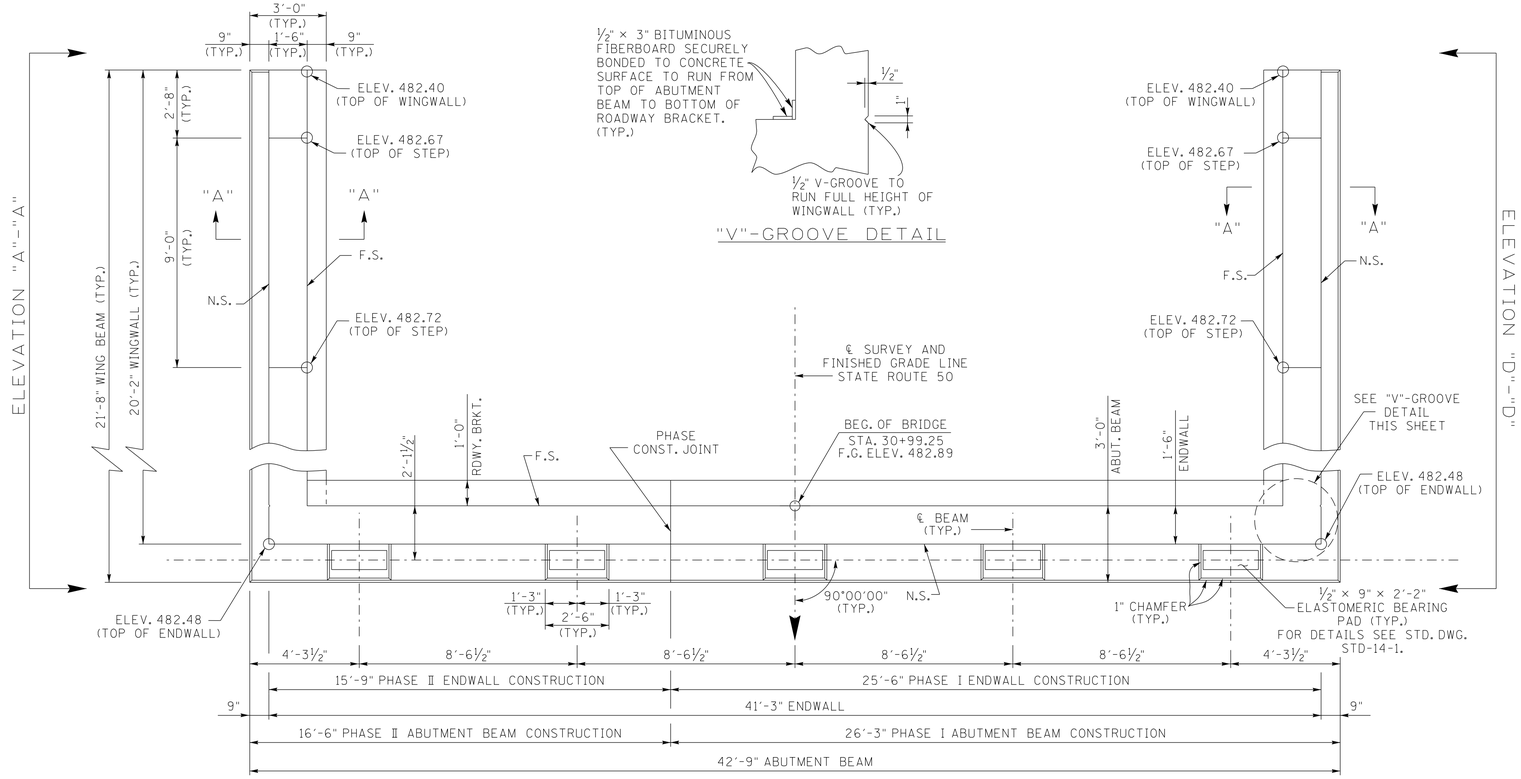


PLAN




"V"-GROOVE DETAIL

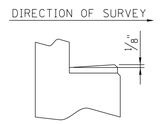


RISER BLOCK SLOPE DETAIL

NOTE: RISER BLOCKS SHALL BE POURED MONOLITHICALLY WITH THE ABUTMENT BEAM.

NOTE: WHEN POURING WINGWALLS, PROVISIONS SHALL BE MADE FOR SETTING REINFORCING STEEL FOR WINGPOSTS AND PARAPETS. FOR DETAILS OF WINGPOSTS AND PARAPET, SEE STD. DWG. NO. STD-1-1SS.

NOTE: NOT LESS THAN HALF OF THE SLAB IN THE END SPAN SHALL BE POURED PRIOR TO, OR CONCURRENTLY WITH, PLACEMENT OF ANY PART OF THE ABUTMENT BACKWALL. AT LEAST THE TOP 12 INCHES OF THE BACKWALL SHALL BE POURED CONCURRENTLY WITH THE END OF SLAB.

NOTE: COST OF BRIDGE RAIL AND POST IS TO BE INCLUDED IN THE UNIT PRICE BID FOR THE BRIDGE RAIL SYSTEM.

NOTE: ELASTOMERIC PADS SHALL BE IN PLACE A MINIMUM OF ONE DAY BEFORE BEING DISTURBED BY SETTING BEAMS. PLACE RUBBER BONDING CEMENT IN SUCH A WAY THAT VISIBLE CONCRETE SURFACES WILL NOT BE STAINED.

NOTE: THE CONTRACTOR SHALL OFF-SET ANY REINFORCEMENT NECESSARY TO MAINTAIN A 2" CLEARANCE TO PHASE CONSTRUCTION JOINTS.

NOTE: WINGBEAM PILES SHALL BE DRIVEN TO REFUSAL. SEISMIC ATTACHMENT IS NOT REQUIRED FOR WINGBEAM PILES.

NOTE: RISER BLOCK BEARING PAD SURFACES TO CONFORM TO BOTTOM OF BEAM GRADE.

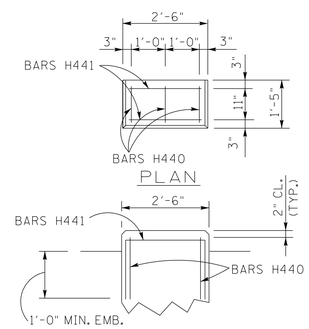


* PLAN OF RISER BLOCK REINFORCING

N.S. DENOTES: NEAR SIDE
F.S. DENOTES: FAR SIDE
P.C.O. DENOTES: PILE CUT-OFF

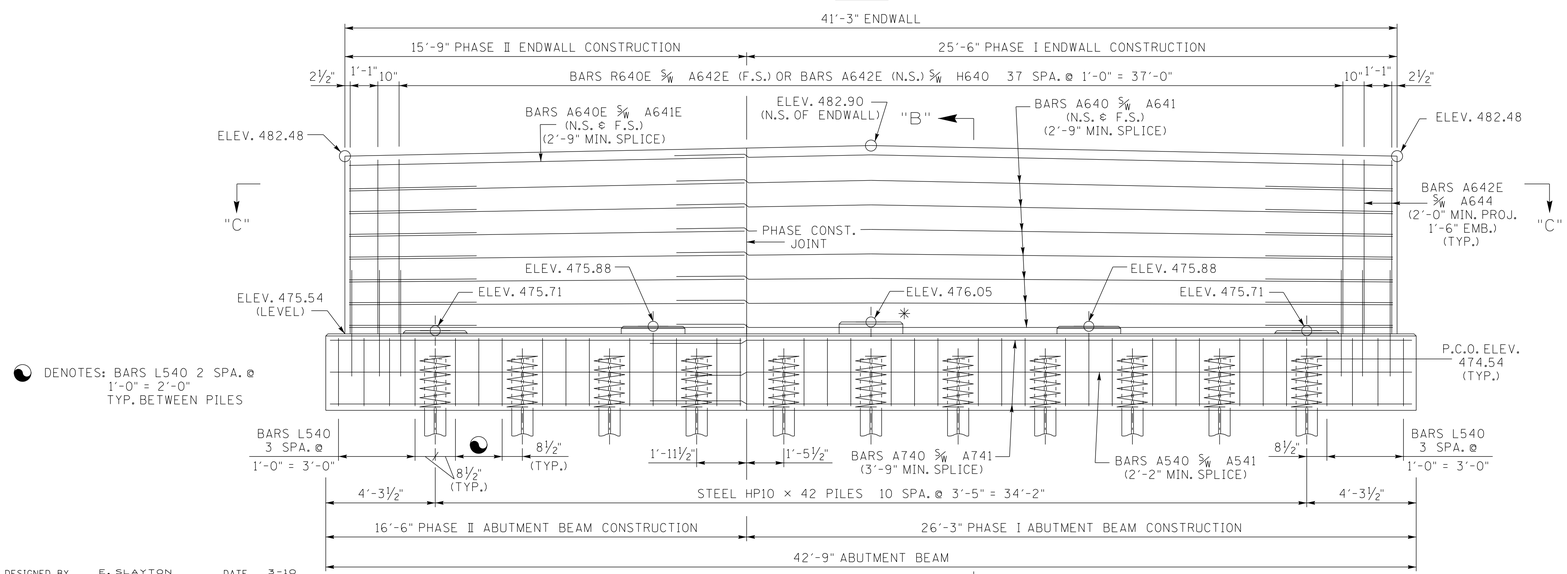


ELEVATION "B"
(LOOKING BACK ON SURVEY)

* DENOTES: RISER BLOCK TO BE REINFORCED

| ESTIMATED QUANTITIES | | |
|---|---|---|
| CLASS "A" CONCRETE C.Y. | EPOXY COATED REINFORCING STEEL LB. | STEEL BAR REINFORCEMENT LB. |
| 59 | 1,835 | 6,838 |

STATE OF TENNESSEE
DEPARTMENT OF TRANSPORTATION

ABUTMENT NO. 1
STATE ROUTE 50
OVER
DUCK RIVER
STATION 37+10.00
LOG MILE 14.04
HICKMAN COUNTY
2014

HARDIE M. BROOKS, JR. STATE OF TENNESSEE

CORRECT Wayne G. Seiger
ENGINEER OF STRUCTURES

| | | | |
|---|---|---|---|
| DESIGNED BY | E. SLAYTON | DATE | 3-10 |
| DRAWN BY | P. MOSHER | DATE | 3-11 |
| SUPERVISED BY | MBC/HMB | DATE | 3-11 |
| CHECKED BY | | DATE | |

U-52-18

ABT1008.DGN

PIN: 105351.00
CONST. NO. 41056-3217-94

| PROJECT NO. | YEAR | SHEET NO. |
|---|---|---|
| BR-STP-50(29) | 2014 | |

REVISIONS

| NO. | DATE | BY | BRIEF DESCRIPTION |
|---|---|---|---|
| | | | |

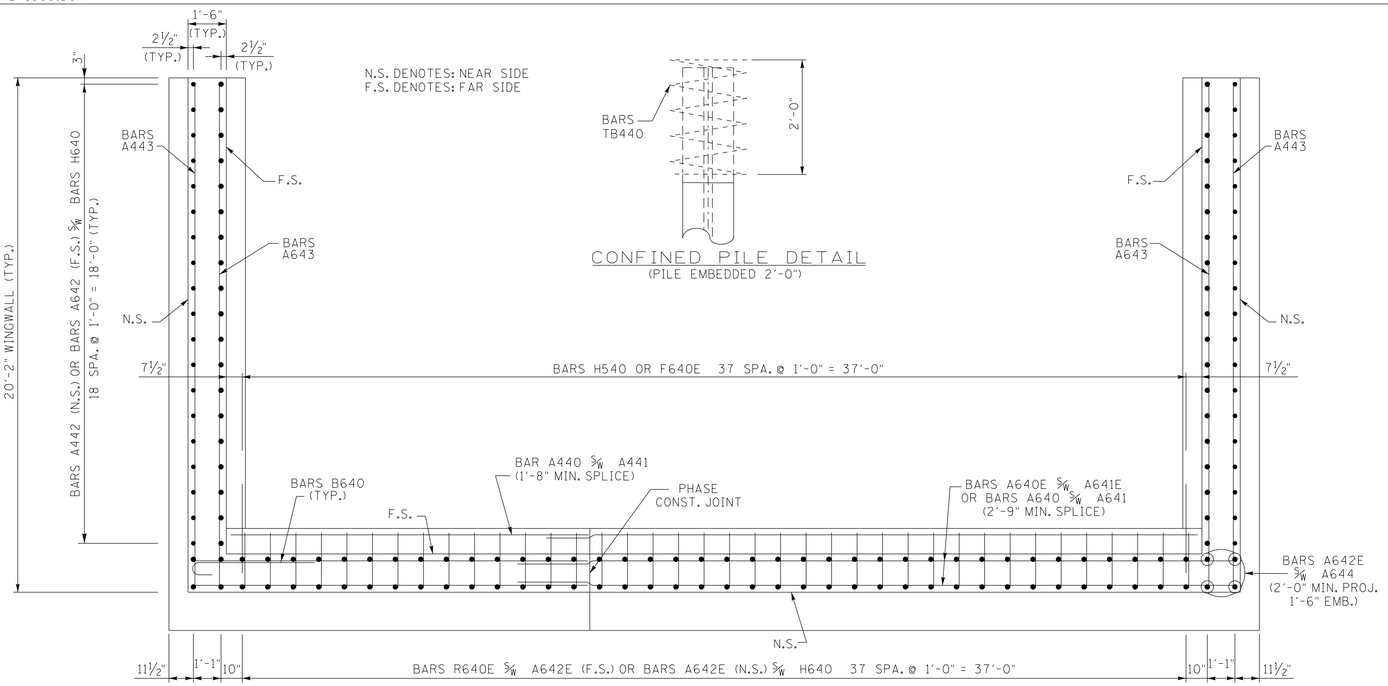


SECTION "C"-"C"




CONFINED PILE DETAIL
(PILE EMBEDDED 2'-0")

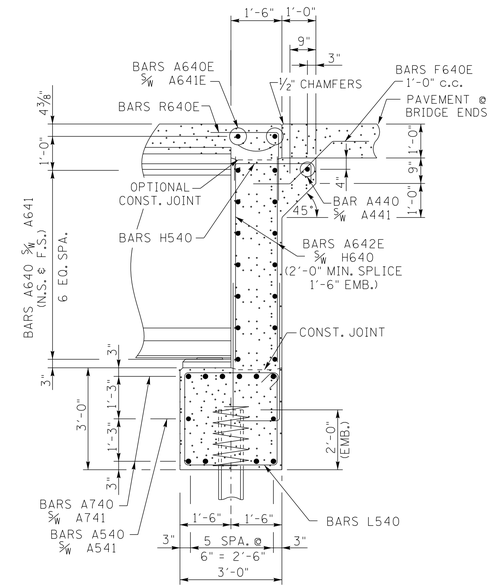


SECTION "B"-"B"

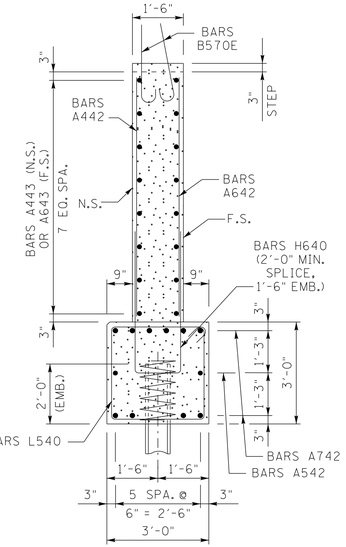


SECTION "A"-"A"

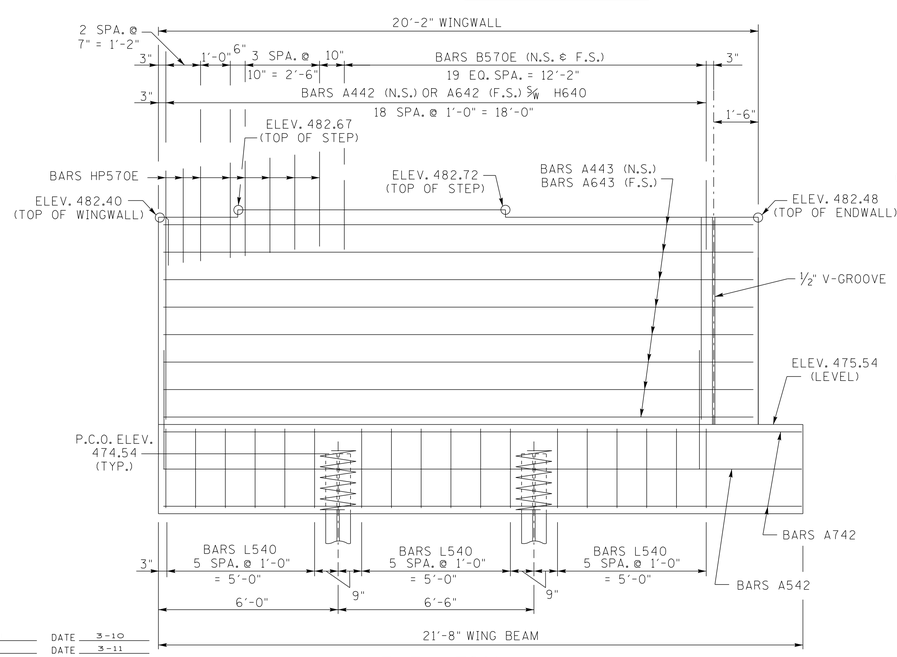


ELEVATION "A"-"A"

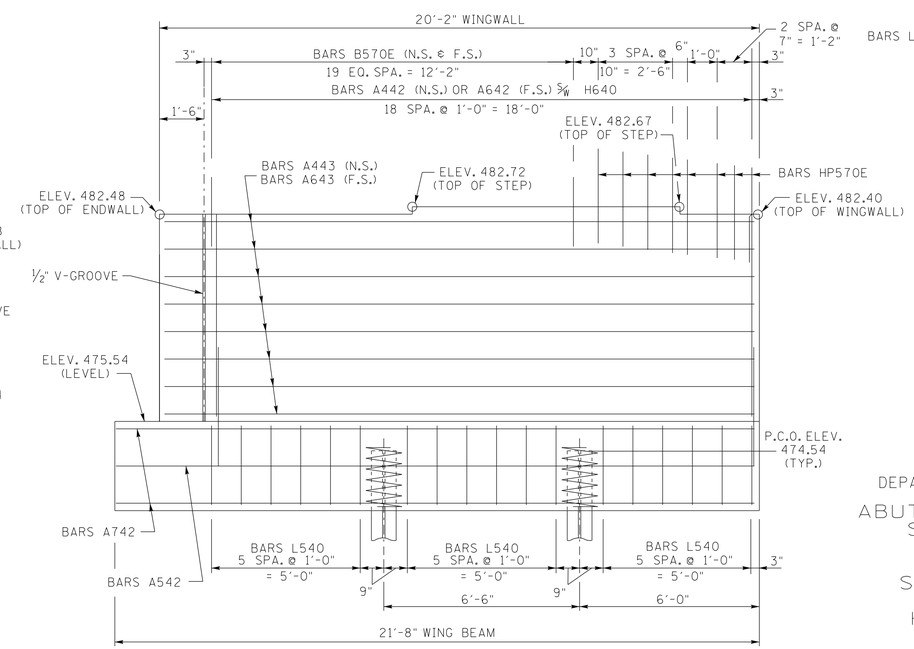


ELEVATION "D"-"D"

STATE OF TENNESSEE
DEPARTMENT OF TRANSPORTATION

ABUTMENT NO. 1 DETAILS
STATE ROUTE 50
OVER
DUCK RIVER
STATION 37+10.00
LOG MILE 14.04
HICKMAN COUNTY
2014

| | | | |
|---|---|---|---|
| DESIGNED BY | E. SLAYTON | DATE | 3-10 |
| DRAWN BY | P. MOSHER | DATE | 3-11 |
| SUPERVISED BY | MBC/HMB | DATE | 3-11 |
| CHECKED BY | | DATE | |

CORRECT Wayne G. Sieger
ENGINEER OF STRUCTURES

U-52-19

ABT1008.DGN

PIN: 105351.00
CONST. NO. 41056-3217-94

| PROJECT NO. | YEAR | SHEET NO. |
|---|---|---|
| BR-STP-50(29) | 2014 | |

REVISIONS

| NO. | DATE | BY | BRIEF DESCRIPTION |
|---|---|---|---|
| | | | |

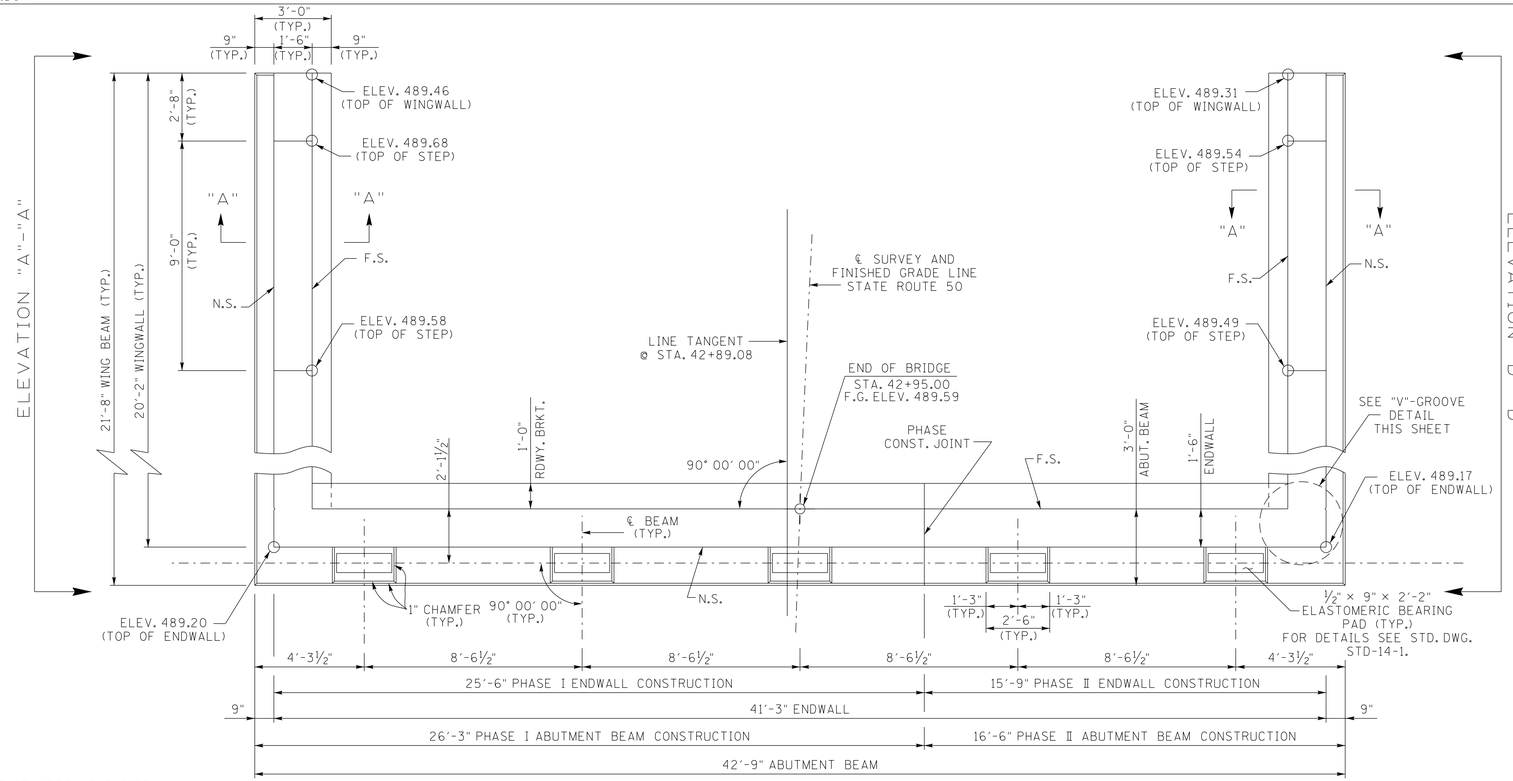


N.S. DENOTES: NEAR SIDE
F.S. DENOTES: FAR SIDE
P.C.O. DENOTES: PILE CUT-OFF

PLAN

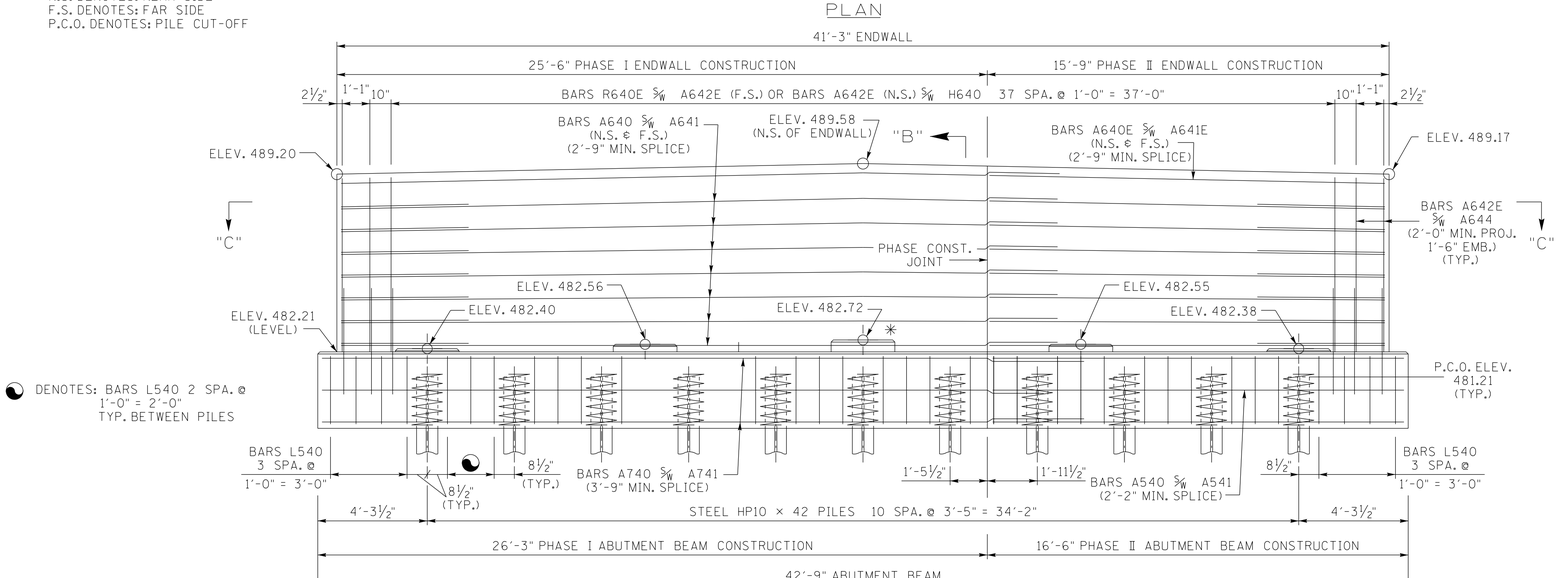


DENOTES: BARS L540 2 SPA. @ 1'-0" = 2'-0" TYP. BETWEEN PILES

ELEVATION (LOOKING FORWARD ON SURVEY) "B"

* DENOTES: RISER BLOCK TO BE REINFORCED

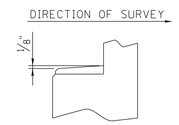


RISER BLOCK SLOPE DETAIL

NOTE: RISER BLOCKS SHALL BE POURED MONOLITHICALLY WITH THE ABUTMENT BEAM.

NOTE: WHEN POURING WINGWALLS, PROVISIONS SHALL BE MADE FOR SETTING REINFORCING STEEL FOR WINGPOSTS AND PARAPETS. FOR DETAILS OF WINGPOSTS AND PARAPET, SEE STD. DWG. NO. STD-1-1SS.

NOTE: NOT LESS THAN HALF OF THE SLAB IN THE END SPAN SHALL BE POURED PRIOR TO, OR CONCURRENTLY WITH, PLACEMENT OF ANY PART OF THE ABUTMENT BACKWALL. AT LEAST THE TOP 12 INCHES OF THE BACKWALL SHALL BE POURED CONCURRENTLY WITH THE END OF SLAB.

NOTE: COST OF BRIDGE RAIL AND POST IS TO BE INCLUDED IN THE UNIT PRICE BID FOR THE BRIDGE RAIL SYSTEM.

NOTE: ELASTOMERIC PADS SHALL BE IN PLACE A MINIMUM OF ONE DAY BEFORE BEING DISTURBED BY SETTING BEAMS. PLACE RUBBER BONDING CEMENT IN SUCH A WAY THAT VISIBLE CONCRETE SURFACES WILL NOT BE STAINED.

NOTE: THE CONTRACTOR SHALL OFF-SET ANY REINFORCEMENT NECESSARY TO MAINTAIN A 2" CLEARANCE TO PHASE CONSTRUCTION JOINTS.

NOTE: WINGBEAM PILES SHALL BE DRIVEN TO REFUSAL. SEISMIC ATTACHMENT IS NOT REQUIRED FOR WINGBEAM PILES.

NOTE: RISER BLOCK BEARING PAD SURFACES TO CONFORM TO BOTTOM OF BEAM GRADE.

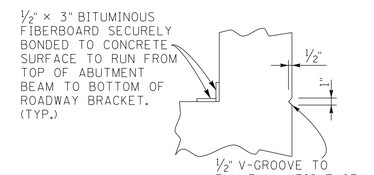


"V"-GROOVE DETAIL

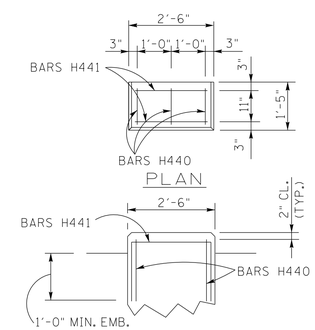


* PLAN OF RISER BLOCK REINFORCING

| ESTIMATED QUANTITIES | | |
|---|---|---|
| CLASS "A" CONCRETE C.Y. | EPOXY COATED REINFORCING STEEL LB. | STEEL BAR REINFORCEMENT LB. |
| 60 | 1,835 | 6,838 |

STATE OF TENNESSEE
DEPARTMENT OF TRANSPORTATION

ABUTMENT NO. 2
STATE ROUTE 50
OVER
DUCK RIVER
STATION 37+10.00
LOG MILE 14.04
HICKMAN COUNTY
2014

HARDIE M. BROOKS, JR. STATE OF TENNESSEE AGRICULTURE

CORRECT Wayne G. Sieger
ENGINEER OF STRUCTURES

| | | | |
|---|---|---|---|
| DESIGNED BY | E. SLAYTON | DATE | 3-10 |
| DRAWN BY | P. MOSHER | DATE | 3-11 |
| SUPERVISED BY | MBC/HMB | DATE | 3-11 |
| CHECKED BY | | DATE | |

U-52-20

ABT1008.DGN

PIN: 105351.00
CONST. NO. 41056-3217-94

| PROJECT NO. | YEAR | SHEET NO. |
|---|---|---|
| BR-STP-50(29) | 2014 | |

REVISIONS

| NO. | DATE | BY | BRIEF DESCRIPTION |
|---|---|---|---|
| | | | |

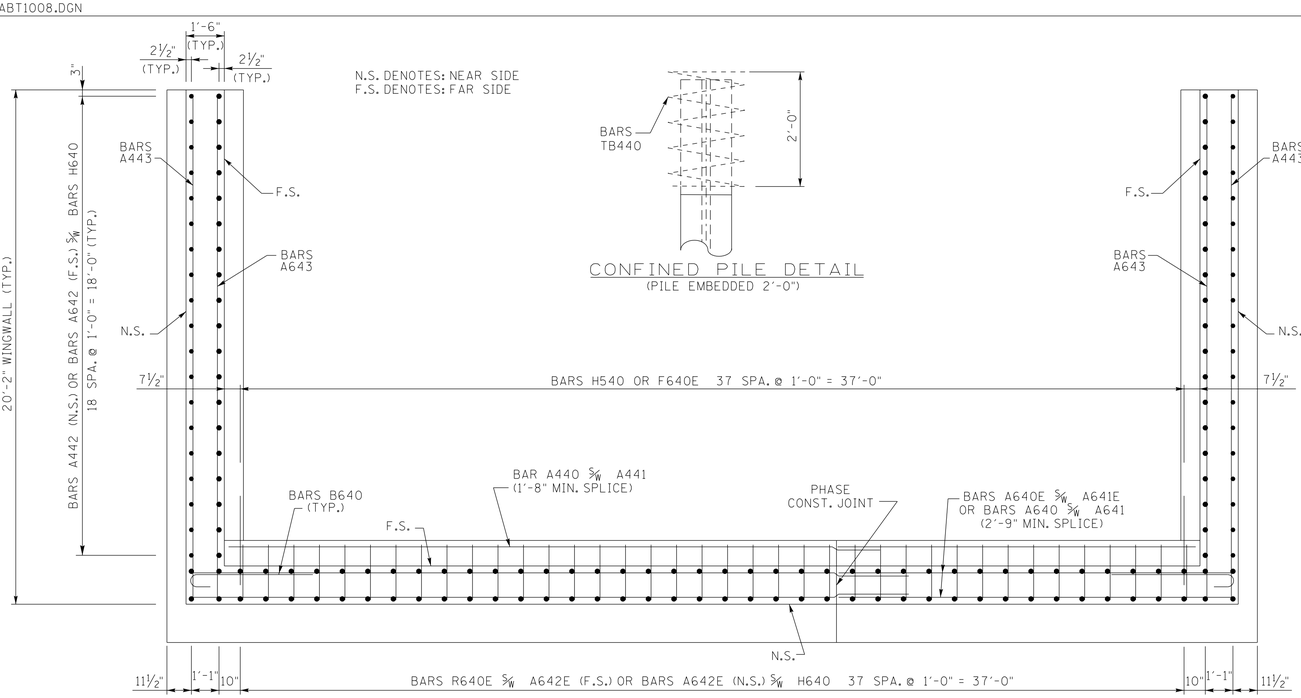


CONFINED PILE DETAIL
(PILE EMBEDDED 2'-0")

SECTION "C"-"C"

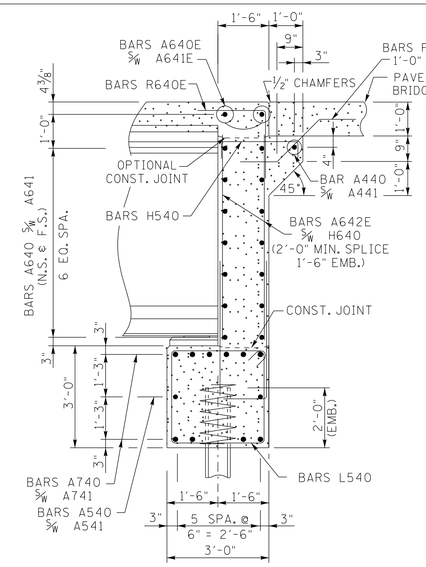


SECTION "B"-"B"

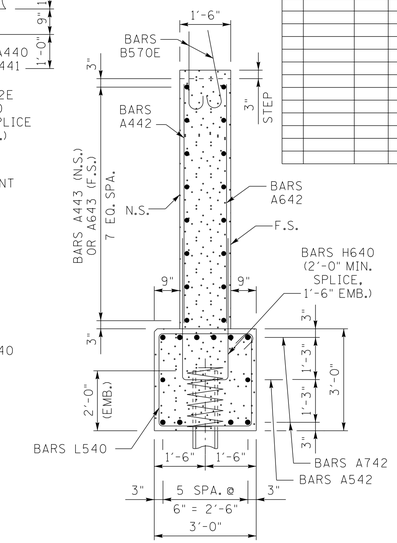


SECTION "A"-"A"

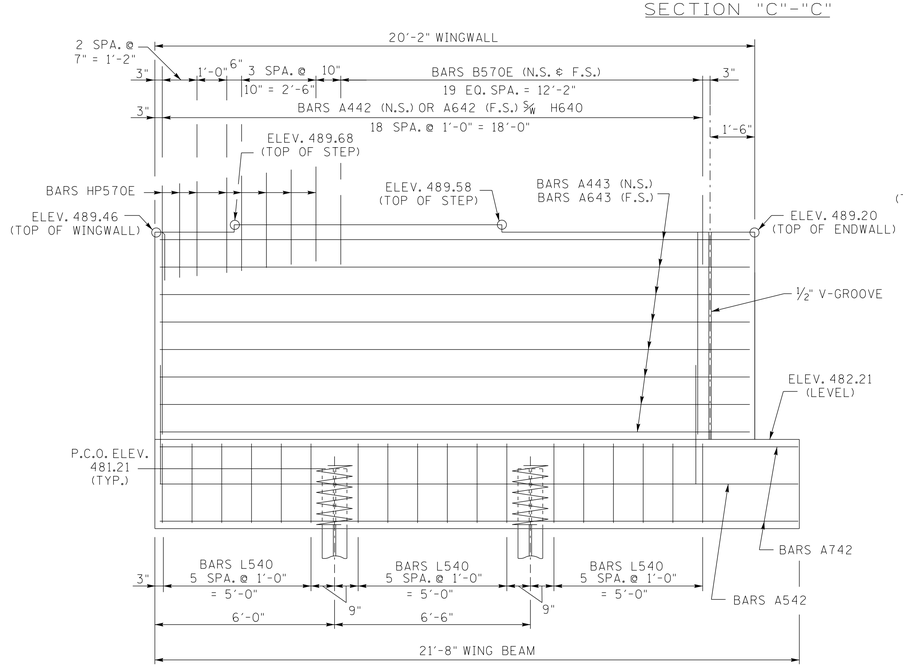


ELEVATION "A"-"A"

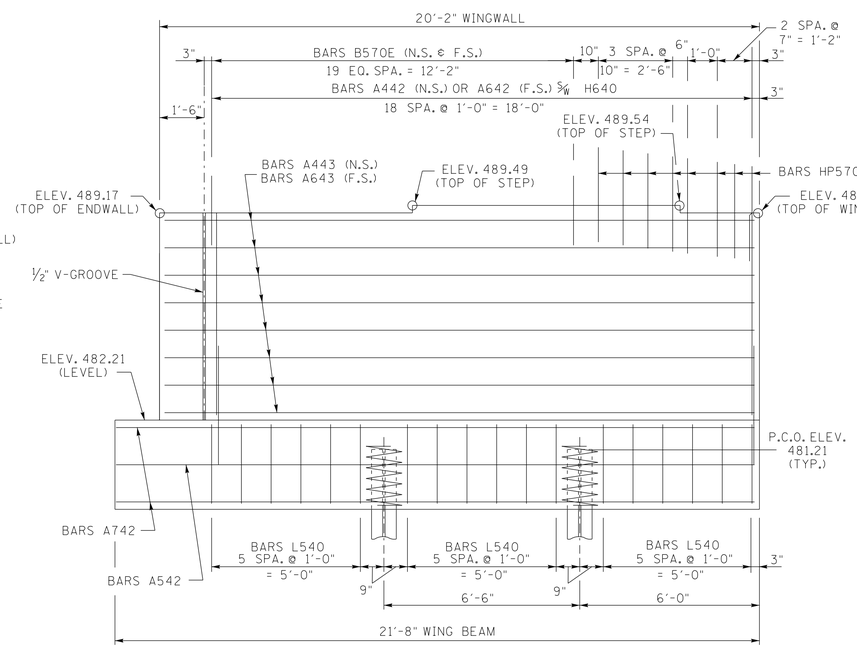


ELEVATION "D"-"D"

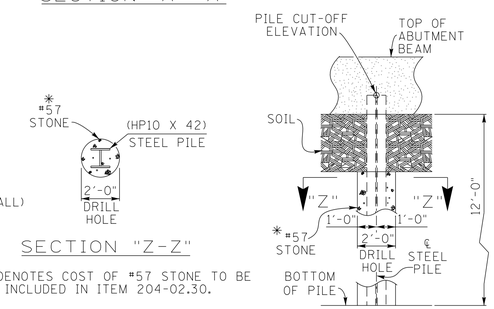


SECTION "Z-Z"

* DENOTES COST OF #57 STONE TO BE INCLUDED IN ITEM 204-02.30.

PILE/CAISSON DETAIL

NOTE: FOUNDATION FOR ABUTMENT NO. 2 SHALL BE EXCAVATED TO THE BOTTOM OF THE ABUTMENT BEAM. ROD SOUNDINGS SHALL THEN BE MADE AS DIRECTED BY THE ENGINEER. FROM THE RESULTS OBTAINED, THE ENGINEER WILL DECIDE IF ITEM 204-02.30 IS NEEDED OR IF PILES MAY BE DRIVEN TO BEARING.

STATE OF TENNESSEE
DEPARTMENT OF TRANSPORTATION

ABUTMENT NO. 2 DETAILS
STATE ROUTE 50
OVER
DUCK RIVER
STATION 37+10.00
LOG MILE 14.04
HICKMAN COUNTY
2014

HARDIE M. BROOKS, JR. STATE OF TENNESSEE AGRICULTURE

CORRECT Wayne G. Sieger
ENGINEER OF STRUCTURES

| | | | |
|---|---|---|---|
| DESIGNED BY | E. SLAYTON | DATE | 3-10 |
| DRAWN BY | P. MOSHER | DATE | 3-11 |
| SUPERVISED BY | MBC/HMB | DATE | 3-11 |
| CHECKED BY | | DATE | |

U-52-21

RET1008.DGN

PIN: 105351.00
CONST. NO. 41056-3217-94

| PROJECT NO. | YEAR | SHEET NO. |
|---|---|---|
| BR-STP-50(29) | 2014 | |

REVISIONS

| NO. | DATE | BY | BRIEF DESCRIPTION |
|---|---|---|---|
| | | | |

| BORING NO. | STATION | OFFSET | GROUND ELEV. | ROCK ELEV. |
|---|---|---|---|---|
| 17 | 43+40 | 7´LT | 483.0 | 474.0 |
| 18 | 43+30 | 4´RT | 486.1 | 474.8 |

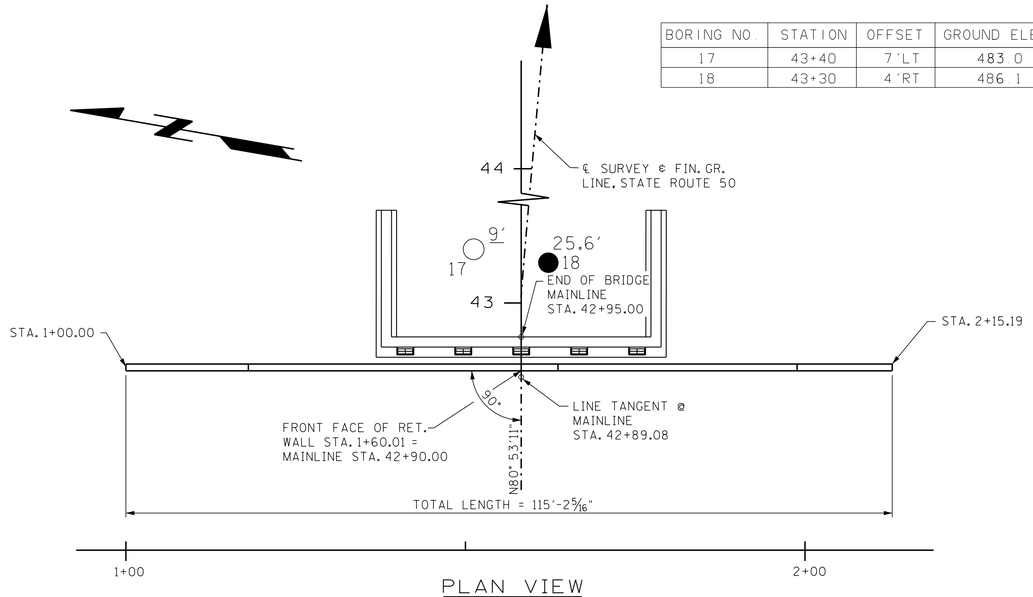


PLAN VIEW
PROPOSED RETAINING WALL AT STA. 42+90.00

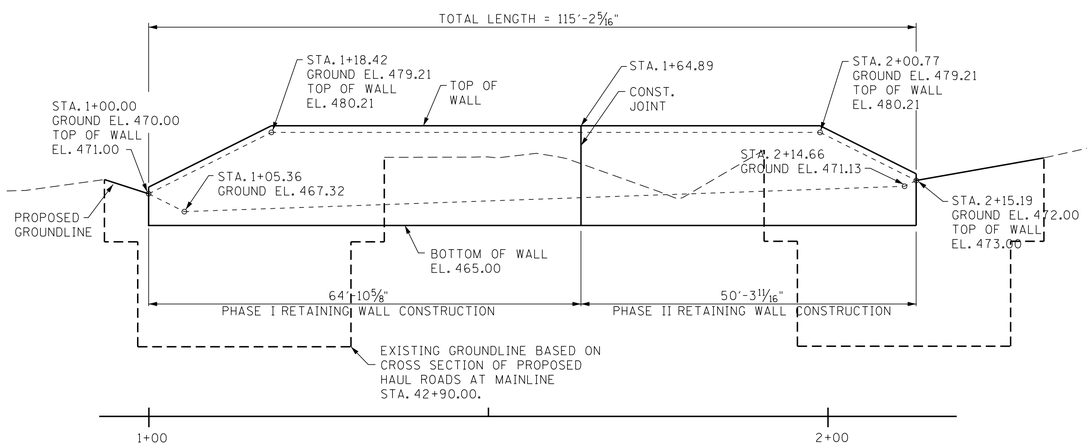


ELEVATION VIEW
PROPOSED RETAINING WALL AT STA. 42+90.00
(LOOKING FORWARD ON SURVEY)

## GENERAL NOTES

1. CONTRACTOR TO VERIFY WALL LOCATION COORDINATES PRIOR TO CONSTRUCTION.
2. CONTRACTOR RESPONSIBLE FOR CHANGES TO DRAINAGE DUE TO WALL TYPE.
3. THE UNIT PRICE BID FOR RETAINING WALLS SHALL INCLUDE THE COST OF GRANULAR BACKFILL AND DRAINAGE SYSTEM PER STD-10-1. THIS UNIT PRICE SHALL INCLUDE THE COST OF ITEMS 303-01.01, 303-01.02, 303-01.03, 710-09.01 AND 710-09.02 AS SHOWN ON STD-10-1. THIS DRAINAGE SYSTEM MAY NOT BE REQUIRED FOR SOME MSE WALLS.
4. THE DESIGN LIFE OF THE RETAINING WALL SHALL BE A MINIMUM OF 75 YEARS.
5. PAYMENT FOR THE PROPOSED RETAINING WALL WILL BE BASED ON ACTUAL CONSTRUCTED WALL FACE.
6. ALL WALLS MUST FOLLOW THE GUIDELINES ESTABLISHED IN SPECIAL PROVISION 624 (REV. 8-6-12).
7. DEPENDING ON THE WALL TO BE USED, A TEMPORARY RETAINING WALL STRUCTURE MAY BE REQUIRED. COSTS FOR DESIGNING AND INSTALLING THE TEMPORARY STRUCTURE SHALL BE INCLUDED IN THE COST OF RETAINING WALL. THE TEMPORARY RETAINING STRUCTURE PLANS WILL BE SUBMITTED FOR REVIEW AT THE SAME TIME THE PERMANENT RETAINING WALL SHOP DRAWINGS ARE SUBMITTED.
8. PROVISIONS SHALL BE MADE FOR DRIVING ABUTMENT PILES BEHIND WALL DEPENDENT ON WALL TYPE USED.
9. ASHLAR STONE FINISH TO BE USED ON FRONT FACE OF RETAINING WALL. ALL EXPOSED SURFACES OF RETAINING WALL SHALL RECEIVE AN APPLIED TEXTURE FINISH (MOUNTAIN GREY, FED. SPEC. NO. 36440). COST OF ASHLAR STONE FINISH AND APPLIED TEXTURE FINISH TO BE INCLUDED IN UNIT PRICE BID FOR RETAINING WALL.
10. USE EPOXY COATED REINFORCING STEEL FOR THE FOOTING DOWEL BARS IN BACK FACE OF WALL. COST TO BE INCLUDED IN THE UNIT PRICE BID FOR RETAINING WALL.

## ESTIMATED QUANTITIES

| ITEM NO. | DESCRIPTION | UNITS | QUANTITY |
|---|---|---|---|
| 604-07.01 | RETAINING WALL (STA. 42+90.00) | S.F. | 1,615 |

NOTE: THE RETAINING WALL PAY QUANTITY IS BASED ON THE SURFACE AREA SHOWN ON THIS DRAWING.

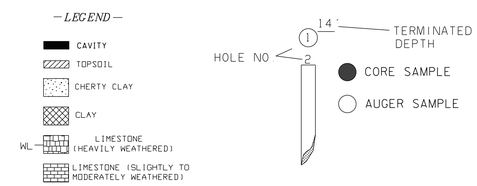


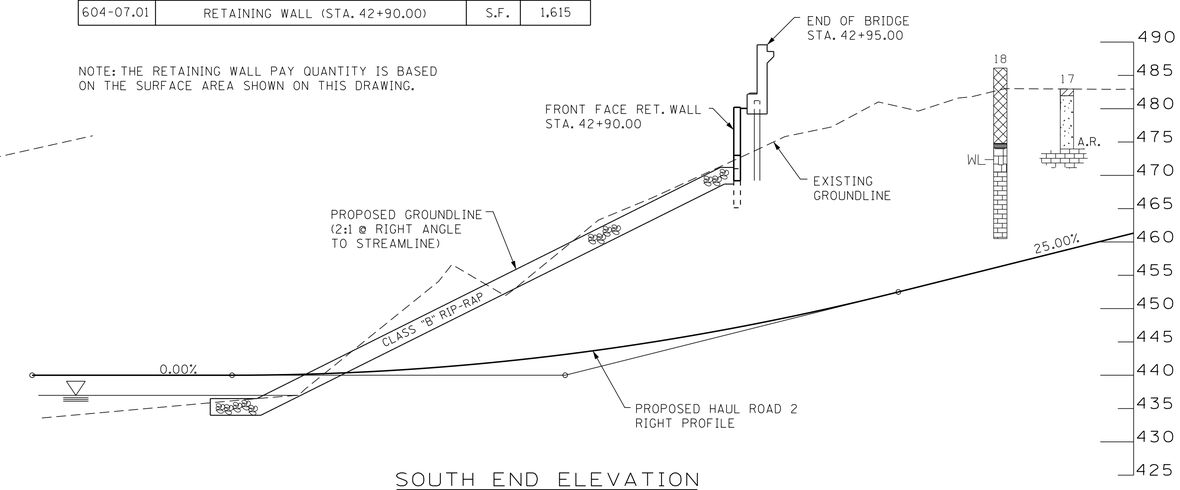


SOUTH END ELEVATION

NOTE:

BORING DEPICTIONS SHOWN ON FOUNDATION DATA SHEET INDICATE GENERAL SOIL AND ROCK TYPES AT THE SPECIFIC BORING LOCATIONS.

TO ASSIST IN BID PREPARATION FOR FOUNDATION CONSTRUCTION DETAIL ROCK AND SOIL DESCRIPTION AND ROCK SAMPLES MAY BE AVAILABLE FOR INSPECTION.

STATE OF TENNESSEE
DEPARTMENT OF TRANSPORTATION

# CONCEPTUAL LAYOUT RETAINING WALL NO. 1 STATE ROUTE 50 STA. 42+90.00 HICKMAN COUNTY 2014

DESIGNED BY E. SLAYTON DATE 3-14
DRAWN BY ES/OAB DATE 3-14
SUPERVISED BY MBC/HMB DATE 3-14
CHECKED BY DATE

U-52-21A

PIN: 105351.00
CONST. NO. 41056-3217-94

| PROJECT NO. | YEAR | SHEET NO. |
|---|---|---|
| BR-STP-50(29) | 2014 | |

REVISIONS

| NO. | DATE | BY | BRIEF DESCRIPTION |
|---|---|---|---|
| | | | |

## TYPICAL SECTION - FOUNDATION ON H-PILE
## CIP CONCRETE CANTILEVER

STATION 1+00 TO STATION 1+36 AND STATION 1+92 TO STATION 2+15.193

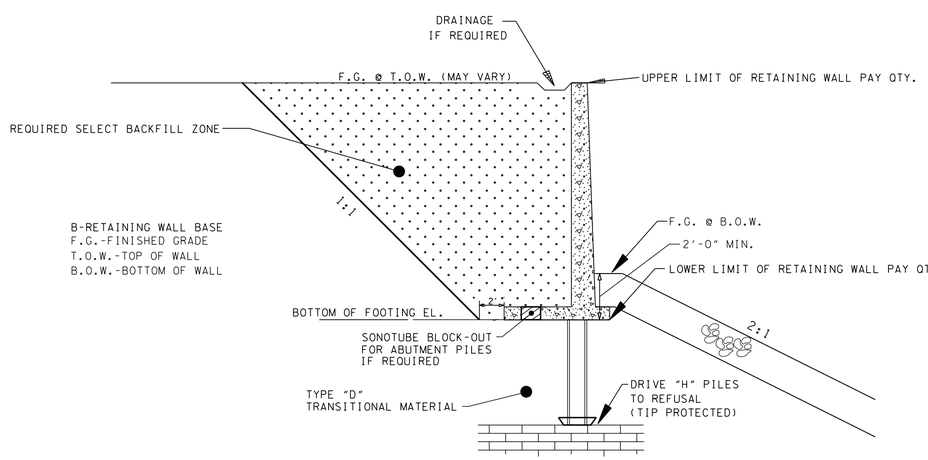


## TYPICAL SECTION - SPREAD FOOTING ON ROCK
## CIP CONCRETE CANTILEVER

STATION 1+36 TO STATION 1+92

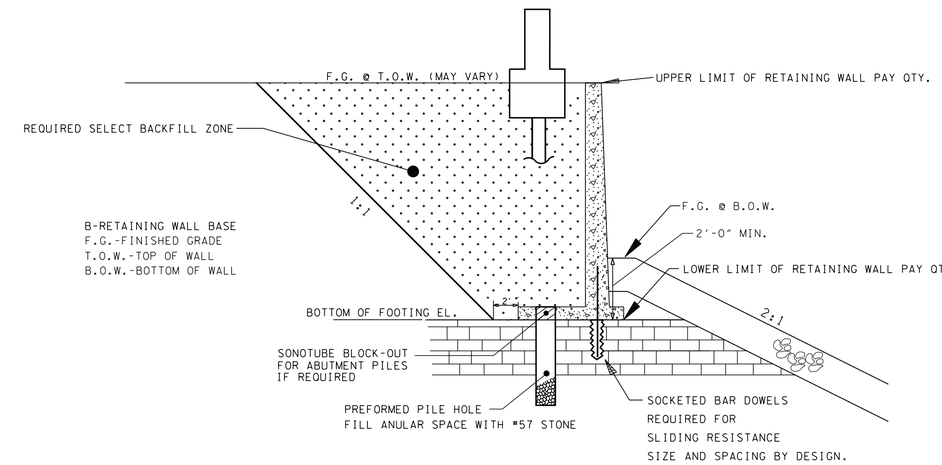


STATE OF TENNESSEE
DEPARTMENT OF TRANSPORTATION

CONCEPTUAL LAYOUT
RETAINING WALL NO. 1
STATE ROUTE 50
STA. 42+90.00
HICKMAN COUNTY
2014

U-52-21B

PIN: 105351.00
CONST. NO. 41056-3217-94

| PROJECT NO. | YEAR | SHEET NO. |
|---|---|---|
| BR-STP-50(29) | 2014 | |

REVISIONS

| NO. | DATE | BY | BRIEF DESCRIPTION |
|---|---|---|---|
| | | | |

## RETAINING WALL DESIGN NOTES

UNLESS SPECIFICALLY STATED OTHERWISE IN THE CONTRACT PLANS, THE BIDDING FOR, THE DESIGN OF AND THE CONSTRUCTION OF RETAINING WALLS SHOWN IN THE PLANS SHALL BE GOVERNED BY THE TENNESSEE DEPARTMENT OF TRANSPORTATION SPECIAL PROVISION 624 REGARDING RETAINING WALLS. THIS SPECIAL PROVISION SHALL BE CONSIDERED AS ONE OF THOSE DOCUMENTS WHICH THE BIDDER/CONTRACTOR HAS EXAMINED AND MADE HIMSELF FAMILIAR WITH AS DESCRIBED IN SECTION 102.04 – EXAMINATION OF THE SITE, THE WORK, THE PLANS, AND THE SPECIFICATIONS IN THE TDOT STANDARD SPECIFICATIONS FOR ROAD AND BRIDGE CONSTRUCTION.

EXCAVATION FOR THE WALL AND/OR ITS FOOTING SHALL NOT BE ACCOMPLISHED UNTIL THE CONTRACTOR HAS SUBMITTED WALL DESIGNS AND CALCULATIONS AND HAS BEEN ISSUED AN APPROVED SET OF WALL PLANS AND HAS LABOR AND MATERIAL RESOURCES AVAILABLE TO BEGIN AND CONTINUE WALL CONSTRUCTION IMMEDIATELY AFTER EXCAVATION.

THIS WALL SHALL BE DESIGNED IN ACCORDANCE WITH LRFD DESIGN PROCEDURES AND REQUIREMENTS AS DESCRIBED IN 1) AASHTO LRFD BRIDGE DESIGN SPECIFICATIONS, 2012 AND INTERIMS AND 2) PUBLICATION FHWA-NHI-10-024/FHWA GEC 011, DESIGN AND CONSTRUCTION OF MECHANICALLY STABILIZED EARTH WALLS AND REINFORCED SOIL SLOPES, NOVEMBER 2009 FOR MSE WALLS.

FOR PROPRIETARY WALL SYSTEMS THAT HAVE BEEN APPROVED AS SHOWN IN SPECIAL PROVISION 624, THE WALL DESIGNER SHALL BE RESPONSIBLE FOR PROVIDING WALL DESIGNS INCORPORATING MATERIALS AND COMPONENTS (I.E. REINFORCEMENT CONNECTION DEVICES, SPECIFIC MANUFACTURER AND PROPERTIES OF GEOGRID) AS WAS ORIGINALLY SUBMITTED AND APPROVED BY TDOT. IF A MATERIAL AND/OR COMPONENT OF THE WALL SYSTEM HAVE BEEN MODIFIED FROM THE ORIGINALLY APPROVED SYSTEM, A WALL DESIGN AND SET OF PLANS AND CALCULATIONS FOR THIS WALL SYSTEM CANNOT BE SUBMITTED FOR REVIEW AND APPROVAL UNTIL THE WALL SYSTEM DESIGNER WHO ORIGINALLY SUBMITTED THE WALL SYSTEM FOR APPROVAL BY TDOT SUBMITS A REQUEST FOR RE-APPROVAL UTILIZING THE MODIFIED ELEMENTS OF THE WALL. THIS SUBMITTAL DOES NOT GUARANTEE APPROVAL OF THE MODIFIED SYSTEM. IF THIS RE-APPROVAL PROCESS DOES NOT MEET THE CONTRACTOR'S SCHEDULE OR IF THE MODIFIED SYSTEM IS NOT APPROVED, THE CONTRACTOR/WALL DESIGNER SHALL PROVIDE A WALL DESIGN FOR ONE OF THE APPROVED SYSTEMS AT NO CHANGE IN CONTRACT PRICE FOR THE RETAINING WALL AND NO CHANGE IN PROJECT SCHEDULE REQUIREMENTS WILL BE ALLOWED.

THE WALL DESIGNER SHALL PROVIDE RETAINING WALL PLANS, DETAILS AND CALCULATIONS AS REQUIRED BY SPECIAL PROVISION 624 AND AS REQUIRED HEREIN.

- THE WALL DESIGNER SHALL UTILIZE THE GEOTECHNICAL PARAMETERS AND RESISTANCE FACTORS AS PROVIDED FOR EACH PROJECT RETAINING WALL ON THE WALL CONCEPT SHEET AND RELATED RETAINING WALL SHEETS TO PREPARE AND SUBMIT DESIGN CALCULATIONS. LOAD FACTORS AND OTHER PERTINENT DESIGN REQUIREMENTS PROVIDED IN AASHTO LRFD BRIDGE DESIGN SPECIFICATIONS, 2012 AND INTERIMS SHALL BE USED FOR NON-MSE WALLS AND PUBLICATION FHWA-NHI-10-024/FHWA GEC 011, DESIGN AND CONSTRUCTION OF MECHANICALLY STABILIZED EARTH WALLS AND REINFORCED SOIL SLOPES, NOVEMBER 2009 FOR MSE WALLS.

- CALCULATIONS FOR BOTH INTERNAL AND EXTERNAL STABILITY (SLIDING, ECCENTRICITY, AND BEARING CAPACITY-GLOBAL STABILITY AND SETTLEMENT BEING THE EXCEPTIONS) SHALL BE PROVIDED FOR EACH CRITICAL WALL SECTION WHICH DEMONSTRATES THE REQUIRED CAPACITY TO DEMAND RATIO OF 1.0 IS MET UTILIZING THE DESIGN PARAMETERS PROVIDED. FOR MSE WALLS, THE WALL DESIGNER MUST ADJUST THE REINFORCEMENT LENGTHS BEYOND THOSE MINIMUM REQUIRED LENGTHS, IF REQUIRED, TO MEET BOTH INTERNAL AND EXTERNAL REQUIREMENTS. THE WALL DESIGNER/CONTRACTOR PLANS MUST INCLUDE ANY FOUNDATION IMPROVEMENTS AS REQUIRED HEREIN ON THE WALL DESIGNER/CONTRACTOR'S WALL ELEVATION VIEWS AND ANY CROSS-SECTIONAL DETAIL DRAWINGS.

- UNLESS OTHERWISE STATED, THE WALL DESIGNER CAN ASSUME THAT MINIMUM GLOBAL STABILITY AND SETTLEMENT CRITERIA IS ACHIEVED WITH A WALL DESIGN MEETING OTHER MINIMUM EXTERNAL STABILITY REQUIREMENTS AND ASSUMING WALL FOUNDATION CONDITIONS ARE MET. WHILE THE WALL DESIGNER'S DESIGN MUST DEMONSTRATE COMPLIANCE WITH EXTERNAL STABILITY REQUIREMENTS AS DISCUSSED ABOVE, THE WALL DESIGNER MAY PROVIDE CERTIFICATION (BY SIGNING AND STAMPING BY PROFESSIONAL ENGINEER REGISTERED IN STATE OF TENNESSEE) OF THE WALLS PLANS AND CALCULATIONS "FOR INTERNAL STABILITY ONLY".

- LOAD COMBINATIONS STRENGTH I, EXTREME EVENT I, AND EXTREME EVENT II AS GIVEN IN TABLE 4-1 OF PUBLICATION FHWA-NHI-10-024/FHWA GEC 011, DESIGN AND CONSTRUCTION OF MECHANICALLY STABILIZED EARTH WALLS AND REINFORCED SOIL SLOPES, NOVEMBER 2009 FOR MSE WALLS SHALL BE EVALUATED FOR MSE WALLS. LOAD COMBINATIONS FOR OTHER WALL TYPES SHALL BE AS GIVEN IN AASHTO LRFD BRIDGE DESIGN SPECIFICATIONS, 2012 AND INTERIMS

## NOTE REGARDING CONSTRUCTION SLOPES

THE CONTRACTOR SHALL BE RESPONSIBLE FOR MAKING THE EXCAVATION IN ACCORDANCE WITH OSHA AND OTHER APPLICABLE STATE AND LOCAL REGULATIONS REGARDING CONSTRUCTION SLOPES AND TRENCHES. IN ADDITION TO FOLLOWING APPLICABLE REGULATORY REQUIREMENTS, AS A MINIMUM REQUIREMENT, ALL TEMPORARY CONSTRUCTION SLOPES SHALL BE PLACED AT A MAXIMUM OF A 1:1 SLOPE IN SOIL AND SHALL NOT BE LEFT OPEN WITHOUT SHORING FOR ANY LONGER THAN ABSOLUTELY NECESSARY. THE CONTRACTOR BUILDING THE WALL SHALL ENSURE THAT THESE TEMPORARY BACK SLOPES ARE NOT AND DO NOT BECOME UNSTABLE. IF SLOPE IS UNSTABLE, BECOMES UNSTABLE, IS CUT STEEPER THAN A 1:1 SLOPE OR IS UNACCEPTABLE FOR ANOTHER REASON, THEN TEMPORARY SHORING SHALL BE USED. ANY UNUSUAL SOIL CONDITIONS OTHER THAN THOSE ASSUMED SHOULD BE REPORTED TO THE PROJECT ENGINEER.

## ACCEPTABLE WALL TYPES

THE RETAINING WALL SHALL BE ONE OF THE WALL TYPES LISTED BELOW. FOR RETAINING WALL SYSTEMS LISTED AS BIN WALL, CRIB WALL, MSE (EITHER SEGMENTAL PANEL OR MODULAR BLOCK) AND GROUND ANCHOR WALL, THE SPECIFIC WALL SYSTEM SUPPLIER/INSTALLER SHALL BE ONE OF THOSE LISTED AS PRE-APPROVED IN THE SPECIAL PROVISION 624.

CAST-IN-PLACE CONCRETE CANTILEVER WALL

## TABLE 1-DESIGN REQUIREMENTS AND PARAMETERS

| DESCRIPTION | | CAST-IN-PLACE CONCRETE CANTILEVER WALL | NOTE * |
|---|---|---|---|
| DESIGN LIFE | | 75 YEARS | |
| SEISMIC ACCELERATION COEFFICIENT (As) | | 0.118 G | |
| EFFECTIVE (DRAINED) FRICTION ANGLE | | | |
| RETAINED BACKFILL-UNCLASSIFIED SITE OR BORROW SOIL | | DO NOT USE | |
| RETAINED BACKFILL-SELECT BACKFILL | | 34 ° TO MAX 40 ° | 1 |
| REINFORCED BACKFILL | | NOT APPLICABLE | 1 |
| UNIT WEIGHT | | | |
| UNCLASSIFIED SITE OR BORROW SOIL | | 120 POUNDS PER CUBIC FOOT | |
| SELECT BACKFILL MATERIAL | | VARIES | 1A |
| MINIMUM LENGTH OF SOIL REINFORCEMENT, B | | NOT APPLICABLE | 2,2A |
| LIMITING ECCENTRICITY | | B/4 (SOIL), 3/8B (ROCK) | |
| COEFFICIENT OF SLIDING FRICTION | | SEE TABLE 2 OR 3 | 3 |
| NOMINAL BEARING CAPACITY | | SEE TABLE 2 OR 3 | 3 |
| RESISTANCE FACTORS | | | |
| SLIDING-STATIC | | 1.0 | 4 |
| SLIDING-COMBINED STATIC+EARTHQUAKE | | 0.9 | 4 |
| BEARING-STATIC | | 0.55 | 5 |
| BEARING-COMBINED STATIC+EARTHQUAKE | | 0.8 | |
| PULLOUT RESISTANCE | | | |
| STATIC | | NOT APPLICABLE | 6 |
| COMBINED STATIC/EARTHQUAKE | | NOT APPLICABLE | 6 |
| TENSILE RESISTANCE OF METALLIC REINFORCEMENTS AND CONNECTORS | | NOT APPLICABLE | |
| STATIC<br>-STRIP REINFORCEMENT<br>-GRID REINFORCEMENT | | NOT APPLICABLE | <br>7<br>7,8 |
| COMBINED STATIC/EARTHQUAKE<br>-STRIP REINFORCEMENT<br>-GRID REINFORCEMENT | | <br><br>NOT APPLICABLE | <br>7<br>7,8 |
| TENSILE RESISTANCE OF GEOSYNTHETIC REINFORCEMENTS AND CONNECTORS | | NOT APPLICABLE | |
| STATIC | | NOT APPLICABLE | |
| COMBINED STATIC/EARTHQUAKE | | NOT APPLICABLE | |
| *REFER TO TABLE 1.1 FOR NOTES. | | | |

## TABLE 1.1
## NOTES FOR TABLE 1

| NO. | NOTE |
|---|---|
| 1 | A MINIMUM FRICTION ANGLE OF 34 DEGREES CAN BE ASSUMED FOR MATERIAL MEETING SPECIFICATIONS IN SECTION F, PART1, AND ITEM E OF TENNESSEE DEPARTMENT OF TRANSPORTATION SPECIAL PROVISION 624 REGARDING RETAINING WALLS. A HIGHER FRICTION ANGLE CAN BE UTILIZED IF THE CONTRACTOR SUBMITS INDEPENDENT TESTING AND IT IS VERIFIED BY TDOT. HOWEVER, IN NO CASE SHALL THE FRICTION ANGLE FOR ANALYSIS EXCEED 40-DEGREES. |
| 1A | SELECT BACKFILL UNIT WEIGHT TO BE DETERMINED BY CONTRACTOR/DESIGNER DEPENDING ON ACTUAL BACKFILL MATERIAL USED. SELECT BACKFILL IS DEFINED AS MATERIAL MEETING SPECIFICATIONS IN SECTION F, PART 1, AND ITEM E OF TENNESSEE DEPARTMENT OF TRANSPORTATION SPECIAL PROVISION 624 REGARDING RETAINING WALLS. IN ORDER TO UTILIZED $\phi$FOR SELECT BACKFILL DESIGN, SELECT BACKFILL MUST BE PLACED FOR A MINIMUM ZONE FORMED BY A 1:1 SLOPE FROM 2 FEET BEHIND THE BOTTOM OF BACK OF WALL FOOTING OR REINFORCED SOIL ZONE FOR MSE WALLS UP TO FINISHED GRADE. |
| 2 | H IS DESIGN HEIGHT OF THE WALL AND IS DEFINED AS THE DIFFERENCE IN ELEVATION BETWEEN THE FINISHED GRADE AT THE TOP OF THE WALL AND THE TOP OF LEVELING PAD OR BOTTOM OF FOOTING FOR NON-MSE WALLS. THE TOP OF THE LEVELING PAD SHALL ALWAYS BE BELOW THE MINIMUM EMBEDMENT REFERENCE LINE AS INDICATED ON THE PLANS FOR THAT LOCATION. THE LENGTH OF THE SOIL REINFORCEMENT, B, IS MEASURED FROM THE BACKFACE OF THE WALL FACING UNIT. IN CASE OF GRID TYPE REINFORCEMENTS THE LENGTH OF THE SOIL REINFORCEMENT IS MEASURED FROM THE BACKFACE OF THE WALL FACING UNIT TO THE LAST FULL TRANSVERSE MEMBER. FOR MODULAR BLOCKFACING UNITS, THE TOTAL LENGTH OF THE REINFORCEMENT, Br AS MEASURED FROM THE FRONT FACE OF THE WALL IS THE LENGTH B AS DEFINED ABOVE PLUS THE WIDTH OF THE MODULAR BLOCK UNIT (THE HORIZONTAL DIMENSION OF THE BLOCK UNIT MEASURED PERPENDICULAR TO THE WALL FACE). |
| 2A | WALL DESIGNER MUST ADJUST THE REINFORCEMENT LENGTHS BEYOND THOSE MINIMUM REQUIRED LENGTHS, IF REQUIRED, TO MEET BOTH INTERNAL AND EXTERNAL STABILITY REQUIREMENTS. MINIMUM REINFORCEMENT LENGHTS MAY BE REQUIRED FOR GLOBAL STABILITY. THIS REQUIREMENT WILL BE SHOWN IN THE PLANS. |
| 3 | THESE VALUES WILL BE PROVIDED IN TABLES 2 AND/OR 3 |
| 4 | PASSIVE RESISTANCE SHALL NOT BE CONSIDERED IN EVALUATION OF SLIDING RESISTANCE. |
| 5 | FOR ALL LIMIT STATES, THE DESIGN LOADING FOR THE MSE RETAINING WALL SYSTEM SHALL NOT EXCEED THE FACTORED GENERAL AND LOCAL BEARING RESISTANCE SPECIFIED IN TABLES 2 OR 3. |
| 6 | LIVE LOAD DUE TO VEHICULAR TRAFFIC SHALL BE INCLUDED IN THE COMPUTATUONS TO DETERMINE THE MAXIMUM TENSILE FORCES IN REINFORCEMENT LAYERS, BUT SHALL BE NEGLECTED IN THE COMPUTATIONS FOR PULLOUT RESISTANCE. |
| 7 | APPLY TO GROSS CROSS-SECTION LESS SACRIFICIAL AREA. FOR SECTIONS WITH HOLES, REDUCE GROSS AREA IN ACCORDANCE WITH ARTICLE 6.8.3 OF AASHTO (2007) AND APPLY TO NET SECTION LESS SACRIFICIAL AREA. |
| 8 | APPLIES TO GRID REINFORCEMENTS CONNECTED TO A RIGID FACING ELEMENT, E.G., A CONCRETE PANEL OR BLOCK. FOR GRID REINFORCEMENTS CONNECTED TO A FLEXIBLE FACING MAT OR WHICH ARE CONTINUOUS WITH THE FACING MAT, USE THE RESISTANCE FACTOR FOR STRIP REINFORCEMENTS. |

## TABLE 3-FOUNDATION PARAMETERS AND REQUIREMENTS FOR OTHER GRAVITY OR SEMI-GRAVITY WALLS

| STATION LIMITS | FOUNDATION BEARING CONDITION REQUIREMENT | NOMINAL BEARING PRESSURE (psf) | COEFFICIENT OF SLIDING FRICTION |
|---|---|---|---|
| 1+00 TO 1+36 | DRIVEN PILE FOUNDATION REQUIRED | N/A | N/A |
| 1+36 TO 1+92 | IN-PLACE ROCK ✳ | 10,000 | 0.55 |
| 1+92 TO 2+15.193 | DRIVEN PILE FOUNDATION REQUIRED | N/A | N/A |

PILES SHOULD BE DRIVEN TO REFUSALTO ACHIEVE AN ADEQUATE BEARING RESISTANCE

✳ SOCKETED BAR DOWELS GROUTED INTO ROCK SHALL BE REQUIRED

## OTHER DESIGN REQUIREMENTS

THE WALL SHALL HAVE A DRAINAGE GUTTER AT THE TOP DESIGNED TO CARRY SURFACE RUNOFF TO EITHER OR BOTH ENDS OF WALLS. DETAILS OF THIS DRAINAGE FEATURE SHALL BE PROVIDED IN WALL DESIGNER/CONTRACTOR'S WALL DESIGN PLANS. IF A CONCRETE CANTILEVER WALL IS USED, THE WALL DESIGNER MUST PROVIDE FOR A DRAINAGE LAYER BEHIND THE WALL STEM WITH ADEQUATE DRAINAGE PROVIDED VIA WEEP HOLES.

THE CONTRACTOR SHALL COORDINATE AND PERFORM ALL UTILITY RELOCATION SO THAT IT DOES NOT INTERFERE WITH THE RETAINING WALL INSTALLATION.

IF REQUIRED, THE RETAINING WALL FOOTING HEEL MUST BE CONSTRUCTED WITH ALLOWANCES MADE TO ENABLE THE PILES FOR ABUTMENT 2 TO BE DRIVEN (SONOTUBE, ETC).

BECAUSE OF THE HAUL ROAD CONSTRUCTION TEMPORARY TRAFFIC CONTROL PLAN AND EXISTING BRIDGE REMOVAL, THIS WALL MUST BE PHASE CONSTRUCTED. TEMPORARY SHORING, OTHER THAN SHEET PILING, SHALL BE REQUIRED.

THE STATION LIMITS AND FOUNDATION PARAMETERS IN TABLE 3 ARE BASED ON THE HAUL ROADS CONSTRUCTION AS SHOWN IN THE "SOIL SHEETS". IF THE CONTRACTOR DEVIATES FROM THE "SOIL SHEETS", THE STATION LIMIT INTERVALS IN TABLE 3 MAY REQUIRE ADJUSTMENT. FOR UNDISTURBED AREAS, THE RETAINING WALL SHALL BE SUPPORTED BY A SPREAD FOUNDATION ON ROCK. FOR AREAS DISTURBED BY HAUL ROAD CONSTRUCTION, THE RETAINING WALL SHALL BE SUPPORTED BY H-PILES DRIVEN TO ROCK.

THE HEEL LENGTH, MEASURED FROM THE FRONT OF THE STEM TO THE BACK OF THE BASE, SHOULD EQUAL OR BE GREATER THAN 0.80 TIMES THE WALL HEIGHT.

STATE OF TENNESSEE
**DEPARTMENT OF TRANSPORTATION**

GEOTECHNICAL DESIGN NOTES
AND REQUIREMENTS
RETAINING WALL NO. 1
STATE ROUTE 50
STATION 42+90.00
HICKMAN COUNTY
2014

U-52-21C

PER1008.DGN

PIN: 105351.00
CONST. NO. 41056-3217-94

| PROJECT NO. | YEAR | SHEET NO. |
|---|---|---|
| BR-STP-50(29) | 2014 | |

REVISIONS

| NO. | DATE | BY | BRIEF DESCRIPTION |
|---|---|---|---|
| | | | |

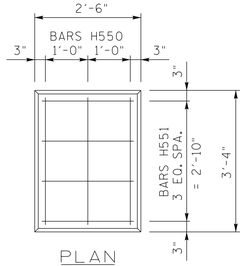


PLAN

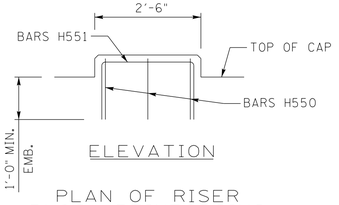


ELEVATION

PLAN OF RISER BLOCK REINFORCING

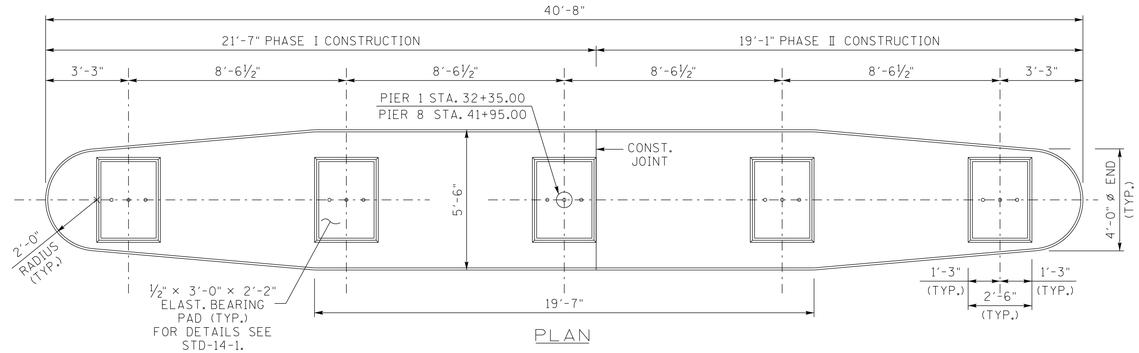


PLAN

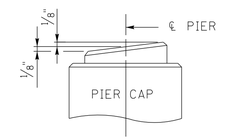


RISER BLOCK SLOPE DETAIL
(PER RISER BLOCK)

TABLE OF ELEVATIONS

| "A" | "B" | "C" | "D" | "E" | "F" | "G" |
|---|---|---|---|---|---|---|
| 476.45 | 476.63 | 476.80 | 476.28 | 470.25 | 450.00 | 449.25 |

✳ DENOTES: RISER BLOCK REQUIRES REINFORCEMENT

✡ DENOTES: DBL. BARS H650
2 SPA. @ 1'-0" = 2'-0"

◐ DENOTES: DBL. BARS L652
2 SPA. @ 10¾" = 1'-9½"

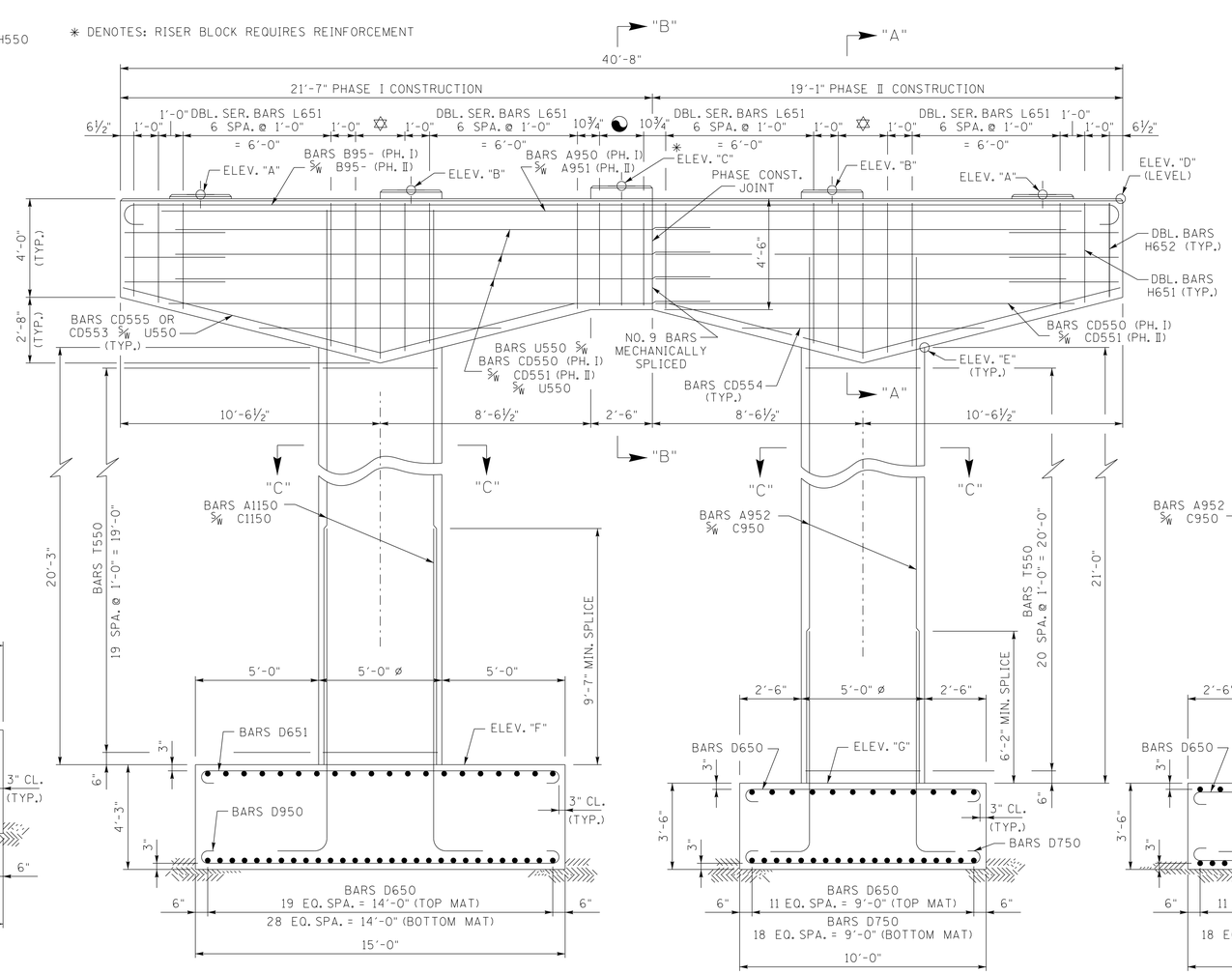


ELEVATION

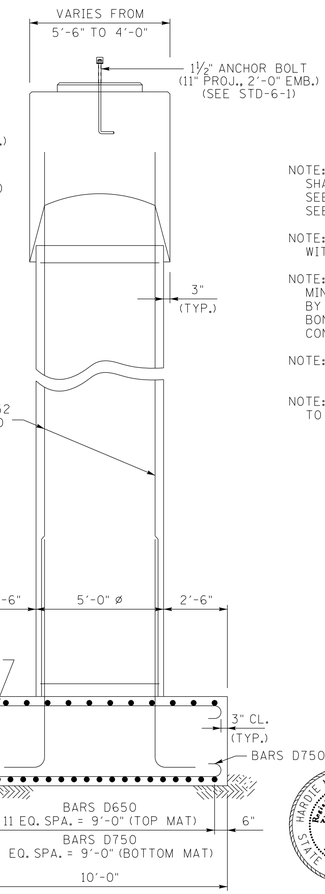


END ELEVATION
(PHASE II)

NOTE: WHEN POURING CAP BEAM, PROVISIONS SHALL BE MADE FOR SETTING ANCHOR BOLTS. SEE STANDARD DRAWING STD-6-1. BOLT PROJ. = 11". SEE NOTE ON SHEET U-52-12.

NOTE: RISER BLOCKS TO BE POURED MONOLITHICALLY WITH CAP BEAM.

NOTE: ELASTOMERIC PADS SHALL BE IN PLACE A MINIMUM OF ONE DAY BEFORE BEING DISTURBED BY SETTING BEAMS ON CONCRETE. PLACE RUBBER BONDING CEMENT IN SUCH A WAY THAT VISIBLE CONCRETE SURFACES WILL NOT BE STAINED.

NOTE: COLUMN STEEL TO EXTEND 5'-8" INTO CAP IN PH. I. COLUMN STEEL TO EXTEND 3'-8" INTO CAP IN PH. II.

NOTE: RISER BLOCK BEARING PAD SURFACE TO CONFORM TO BOTTOM OF BEAM GRADE.

ESTIMATED QUANTITIES

| CLASS "A" CONCRETE (BRIDGES) C.Y. | REINFORCING STEEL (BRIDGES) L.B. |
|---|---|
| 107 | 19,996 |

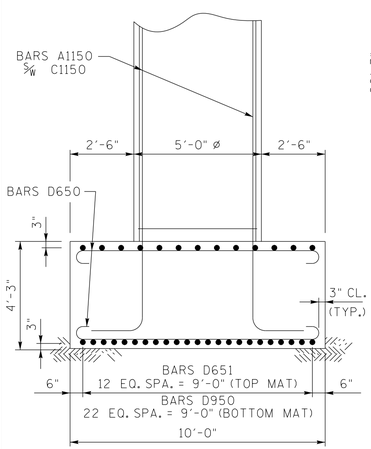


END ELEVATION
(PHASE I)

STATE OF TENNESSEE
DEPARTMENT OF TRANSPORTATION

PIER NO. 1
ALTERNATE "A"
STATE ROUTE 50
OVER
DUCK RIVER
STATION 37+10.00
LOG MILE 14.04
HICKMAN COUNTY
2014

HARDIE M. BROOKS, JR. REGISTERED ENGINEER AGRICULTURE STATE OF TENNESSEE

CORRECT Wayne G. Sieg
ENGINEER OF STRUCTURES

| | | | |
|---|---|---|---|
| DESIGNED BY | E. SLAYTON | DATE | 3-10 |
| DRAWN BY | P. MOSHER | DATE | 8-11 |
| SUPERVISED BY | MBC/HMB | DATE | 8-11 |
| CHECKED BY | E. SLAYTON | DATE | 4-14 |

U-52-22

PER1008.DGN

PIN: 105351.00
CONST. NO. 41056-3217-94

| PROJECT NO. | YEAR | SHEET NO. |
|---|---|---|
| BR-STP-50(29) | 2014 | |

REVISIONS

| NO. | DATE | BY | BRIEF DESCRIPTION |
|---|---|---|---|
| | | | |

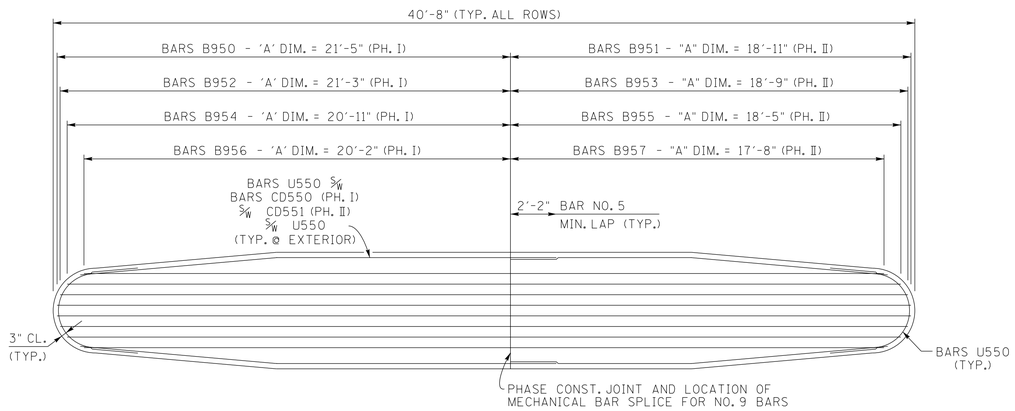


ROW 1

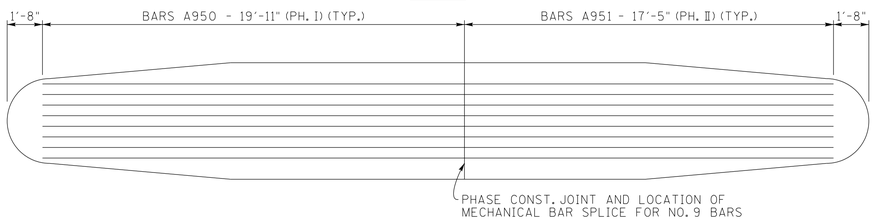


ROWS 2 AND 3

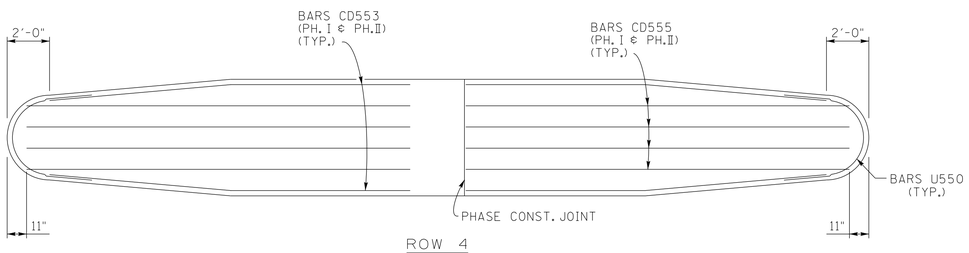


ROW 4

PLAN OF MAIN REINFORCEMENT

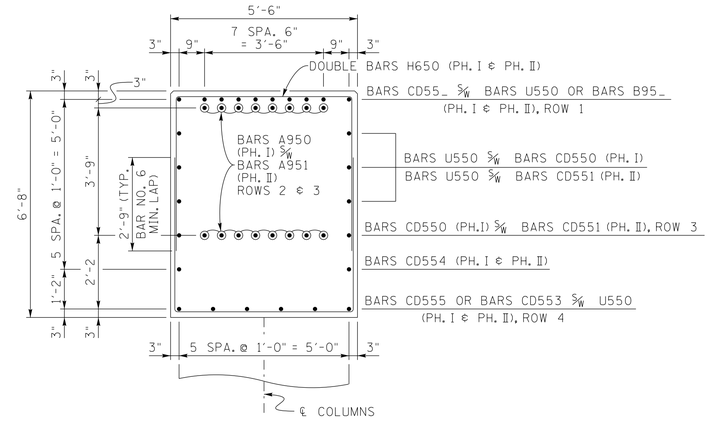


SECTION "A" - "A"

(TYP. ADJ. TO COLUMN)

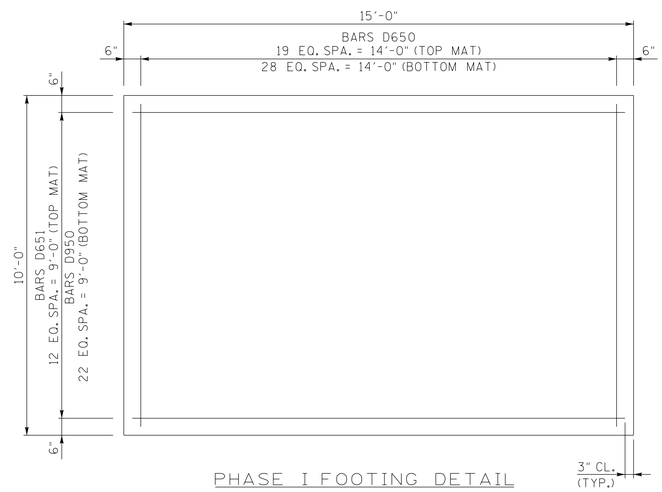


PHASE I FOOTING DETAIL

(15'-0" × 10'-0" × 4'-3")

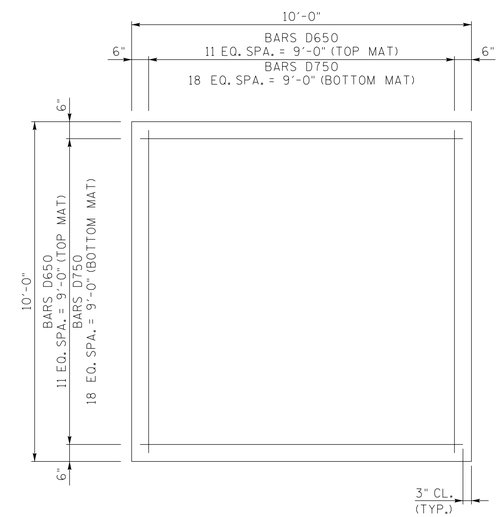


PHASE II FOOTING DETAIL

(10'-0" × 10'-0" × 3'-6")

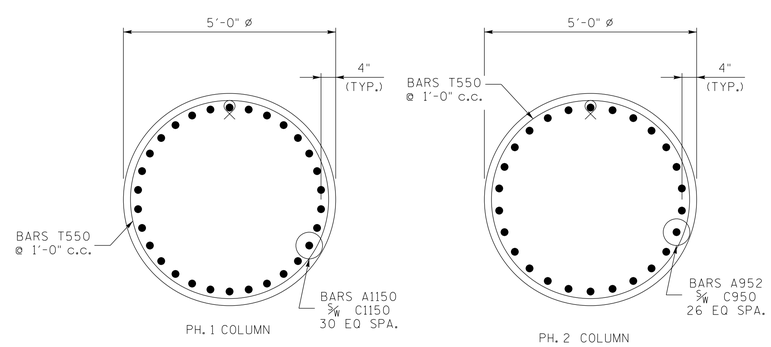


SECTION "C"-"C"

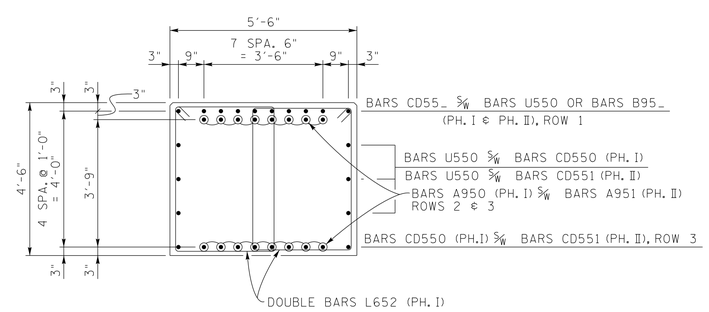


SECTION "B" - "B"

STATE OF TENNESSEE
DEPARTMENT OF TRANSPORTATION

PIER NO. 1 DETAILS
ALTERNATE "A"
STATE ROUTE 50
OVER
DUCK RIVER
STATION 37+10.00
LOG MILE 14.04
HICKMAN COUNTY
2014

HARDIE M. BROOKS, JR.
REGISTERED ENGINEER
AGRICULTURE
STATE OF TENNESSEE

CORRECT Wayne G. Sieger
ENGINEER OF STRUCTURES

| | | | |
|---|---|---|---|
| DESIGNED BY | E. SLAYTON | DATE | 3-10 |
| DRAWN BY | P. MOSHER | DATE | 8-11 |
| SUPERVISED BY | MBC/HMB | DATE | 8-11 |
| CHECKED BY | E. SLAYTON | DATE | 4-14 |

U-52-22A

PER1008.DGN

PIN: 105351.00
CONST. NO. 41056-3217-94

| PROJECT NO. | YEAR | SHEET NO. |
|---|---|---|
| BR-STP-50(29) | 2014 | |

REVISIONS

| NO. | DATE | BY | BRIEF DESCRIPTION |
|---|---|---|---|
| | | | |

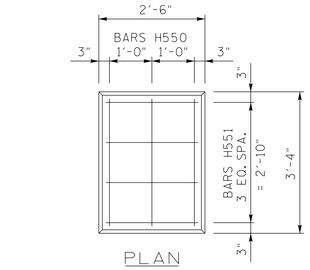


PLAN

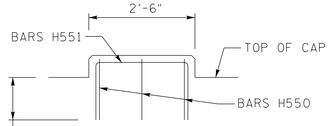


ELEVATION

PLAN OF RISER BLOCK REINFORCING

| | DIM. "A" | |
|---|---|---|
| | PHASE I | PHASE II |
| PIER 2 | 25'-5 9/16" | 26'-2 9/16" |
| PIER 3 | 26'-2 11/16" | 26'-11 11/16" |
| PIER 4 | 26'-11 11/16" | 27'-8 11/16" |
| PIER 5 | 27'-8 3/4" | 28'-5 3/4" |
| PIER 6 | 28'-5 3/4" | 29'-2 3/4" |

✡ DENOTES: DBL. BARS H650
2 SPA. @ 1'-0" = 2'-0"

◐ DENOTES: DBL. BARS L652
2 SPA. @ 10 3/4" = 1'-9 1/2"

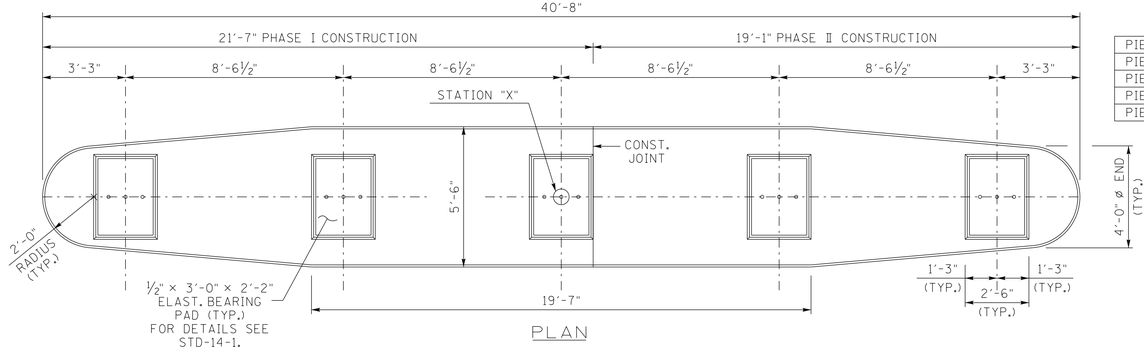


PLAN

| | STATION "X" |
|---|---|
| PIER 2 | 33+70.00 |
| PIER 3 | 35+05.00 |
| PIER 4 | 36+40.00 |
| PIER 5 | 37+75.00 |
| PIER 6 | 39+10.00 |

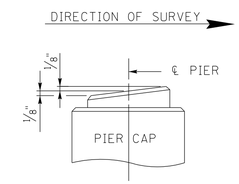


RISER BLOCK SLOPE DETAIL
(PER RISER BLOCK)

✳ DENOTES: RISER BLOCK REQUIRES REINFORCEMENT

TABLE OF ELEVATIONS

| | "A" | "B" | "C" | "D" | "E" | "F" | "G" | "H" | "I" |
|---|---|---|---|---|---|---|---|---|---|
| PIER 2 | 477.21 | 477.38 | 477.55 | 477.04 | 471.01 | 445.55 | 444.8 | 441.30 | 441.30 |
| PIER 3 | 477.97 | 478.14 | 478.31 | 477.80 | 471.77 | 445.55 | 444.8 | 441.30 | 441.30 |
| PIER 4 | 478.72 | 478.89 | 479.06 | 478.55 | 472.52 | 445.55 | 444.8 | 441.30 | 441.30 |
| PIER 5 | 479.48 | 479.65 | 479.82 | 479.31 | 473.28 | 445.55 | 444.8 | 441.30 | 441.30 |
| PIER 6 | 480.23 | 480.41 | 480.58 | 480.06 | 474.03 | 445.55 | 444.8 | 441.30 | 441.30 |

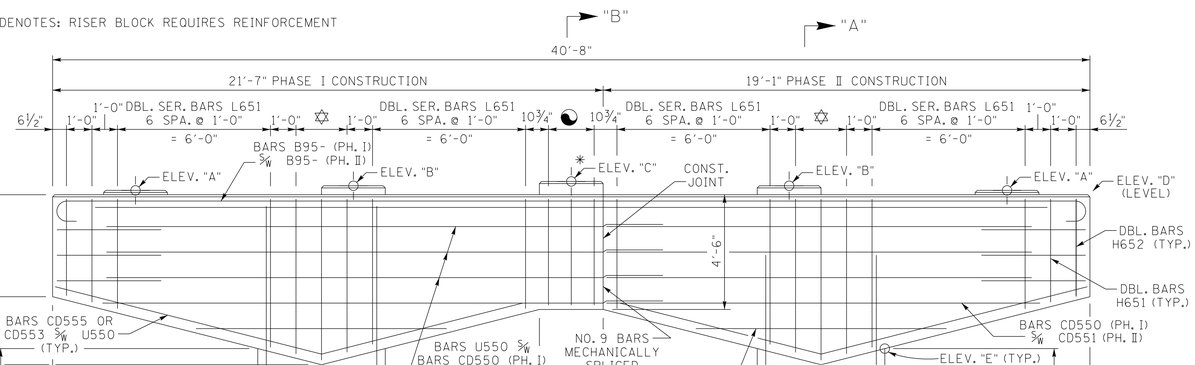


ELEVATION

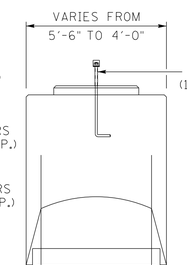


X DENOTES: 24 SPA. @ 1'-0" = 24'-0" (PIER 2, PH. 1)
25 SPA. @ 1'-0" = 25'-0" (PIER 2, PH. 2)
25 SPA. @ 1'-0" = 25'-0" (PIER 3, PH. 1)
26 SPA. @ 1'-0" = 26'-0" (PIER 3, PH. 2)
26 SPA. @ 1'-0" = 26'-0" (PIER 4, PH. 1)
27 SPA. @ 1'-0" = 27'-0" (PIER 4, PH. 2)
27 SPA. @ 1'-0" = 27'-0" (PIER 5, PH. 1)
27 SPA. @ 1'-0" = 27'-0" (PIER 5, PH. 2)
27 SPA. @ 1'-0" = 27'-0" (PIER 6, PH. 1)
28 SPA. @ 1'-0" = 28'-0" (PIER 6, PH. 2)

NOTE: WHEN POURING CAP BEAM, PROVISIONS SHALL BE MADE FOR SETTING ANCHOR BOLTS. SEE STANDARD DRAWING STD-6-1. BOLT PROJ. = 11". SEE NOTE ON SHEET U-52-12.

NOTE: RISER BLOCKS TO BE POURED MONOLITHICALLY WITH CAP BEAM.

NOTE: ELASTOMERIC PADS SHALL BE IN PLACE A MINIMUM OF ONE DAY BEFORE BEING DISTURBED BY SETTING BEAMS ON CONCRETE. PLACE RUBBER BONDING CEMENT IN SUCH A WAY THAT VISIBLE CONCRETE SURFACES WILL NOT BE STAINED.

NOTE: COLUMN STEEL TO EXTEND 5'-8" INTO CAP IN PH. I.
COLUMN STEEL TO EXTEND 3'-8" INTO CAP IN PH. II.

NOTE: RISER BLOCK BEARING PAD SURFACE TO CONFORM TO BOTTOM OF BEAM GRADE.

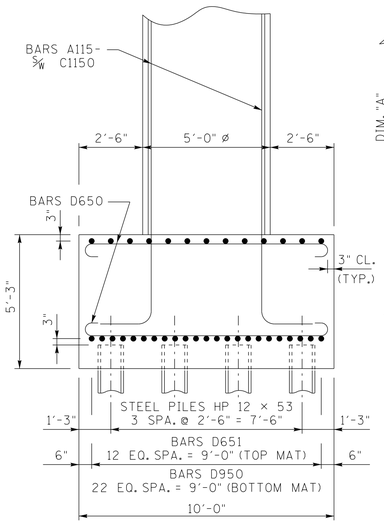


END ELEVATION
(PHASE I)

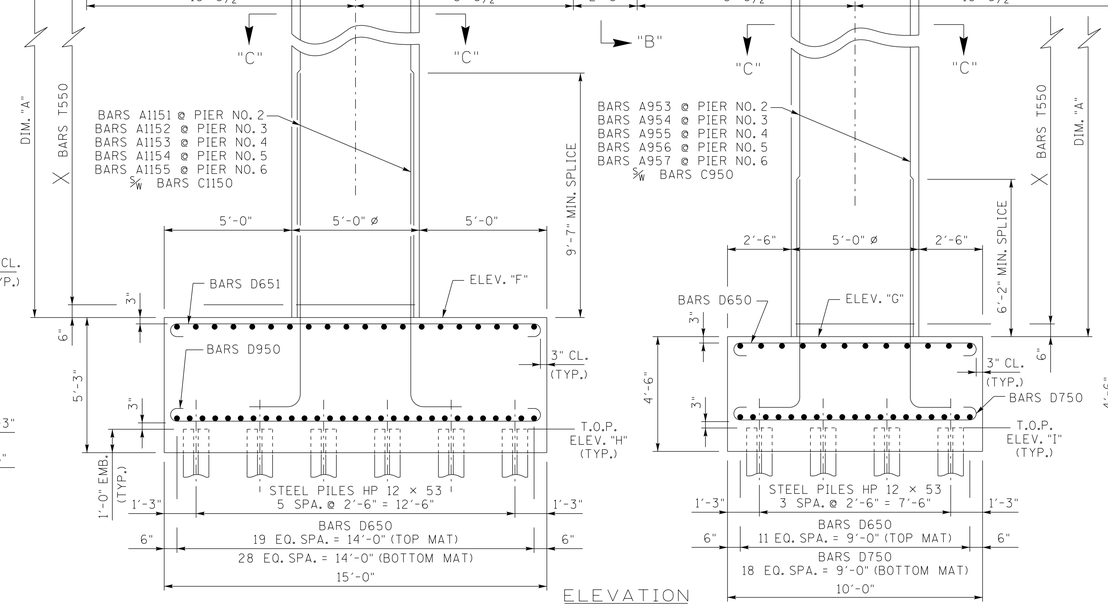


ELEVATION

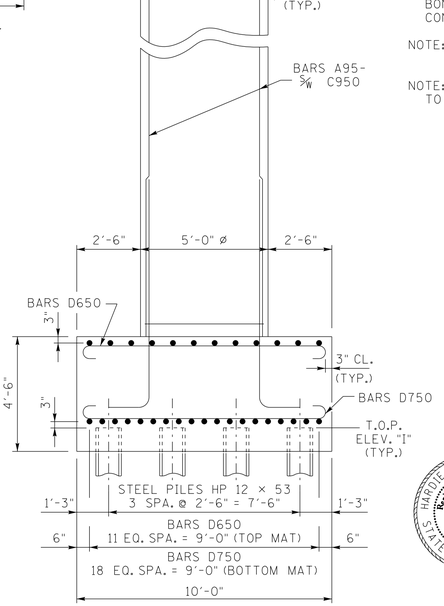


END ELEVATION
(PHASE II)

ESTIMATED QUANTITIES

| | CLASS "A" CONCRETE (BRIDGES) C.Y. | REINFORCING STEEL (BRIDGES) L.B. |
|---|---|---|
| PIER 2 | 124 | 21,457 |
| PIER 3 | 125 | 21,675 |
| PIER 4 | 126 | 21,893 |
| PIER 5 | 127 | 22,095 |
| PIER 6 | 128 | 22,297 |

STATE OF TENNESSEE
DEPARTMENT OF TRANSPORTATION

PIER NOS. 2 THRU 6
ALTERNATE "A"
STATE ROUTE 50
OVER
DUCK RIVER
STATION 37+10.00
LOG MILE 14.04
HICKMAN COUNTY
2014

HARDIE M. BROOKS, JR. STATE OF TENNESSEE 15 AGRICULTURE

CORRECT Wayne J. Sieger
ENGINEER OF STRUCTURES

| | | | |
|---|---|---|---|
| DESIGNED BY | E. SLAYTON | DATE | 3-10 |
| DRAWN BY | P. MOSHER | DATE | 8-11 |
| SUPERVISED BY | MBC/HMB | DATE | 8-11 |
| CHECKED BY | E. SLAYTON | DATE | 4-14 |

U-52-23

PER1008.DGN

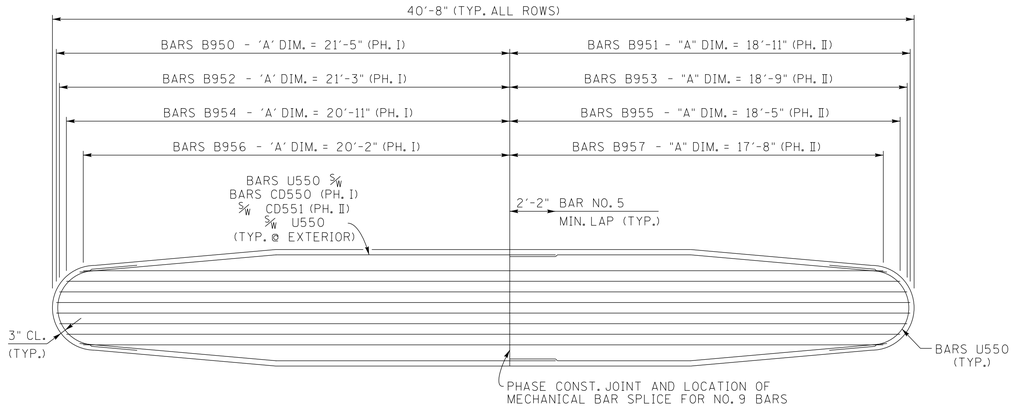


ROW 1

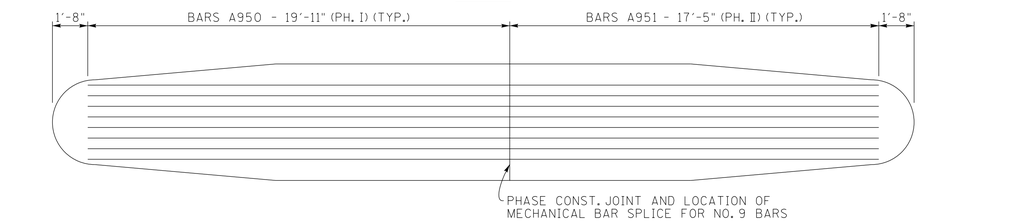


ROWS 2 AND 3

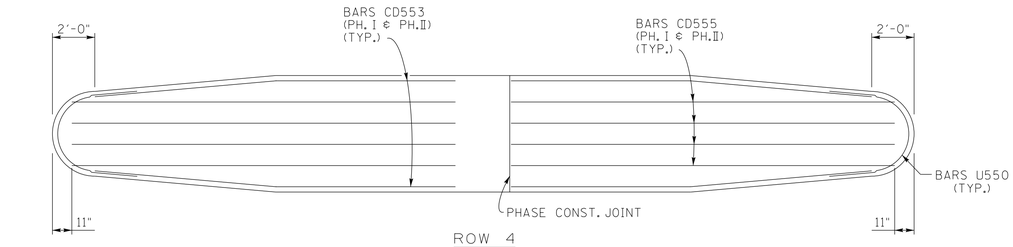


ROW 4

PLAN OF MAIN REINFORCEMENT

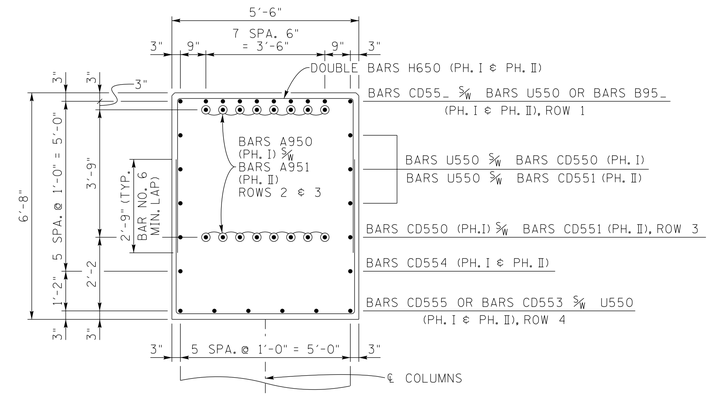


SECTION "A" - "A"

(TYP. ADJ. TO COLUMN)

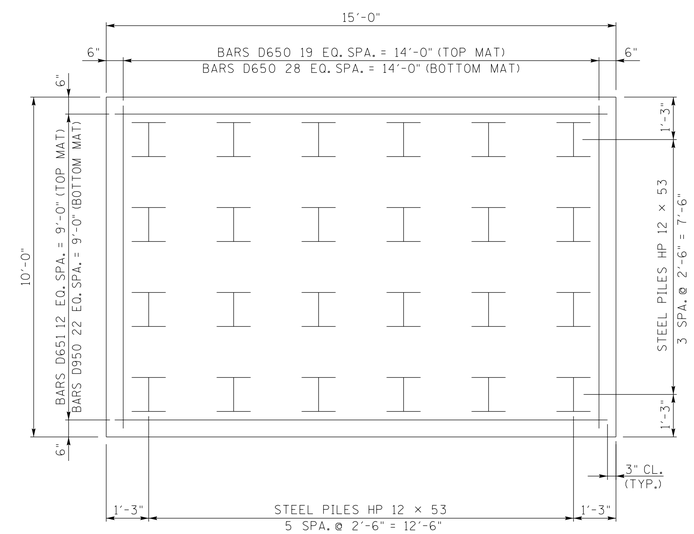


PHASE I FOOTING DETAIL

(15'-0" × 10'-0" × 5'-3")

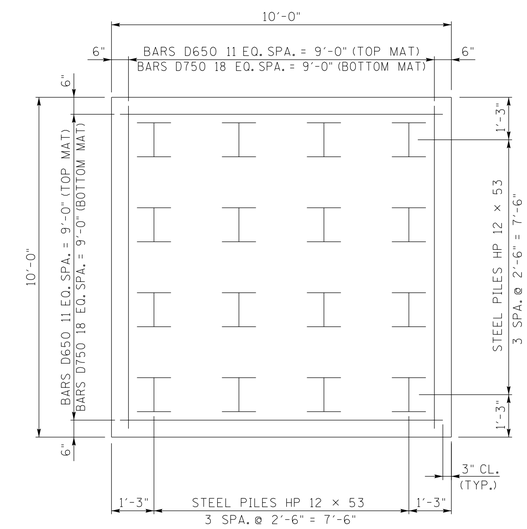


PHASE II FOOTING DETAIL

(10'-0" × 10'-0" × 4'-6")

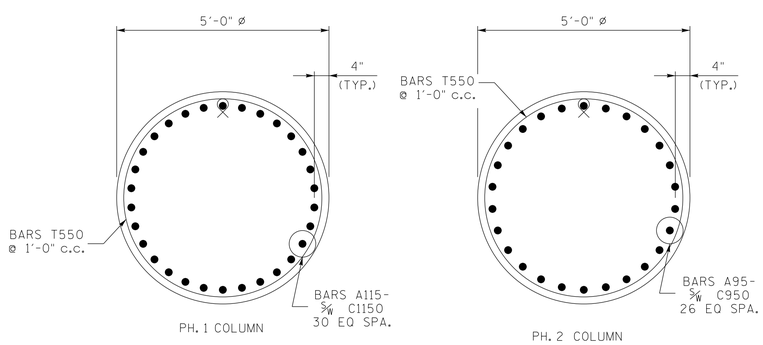


SECTION "C"-"C"

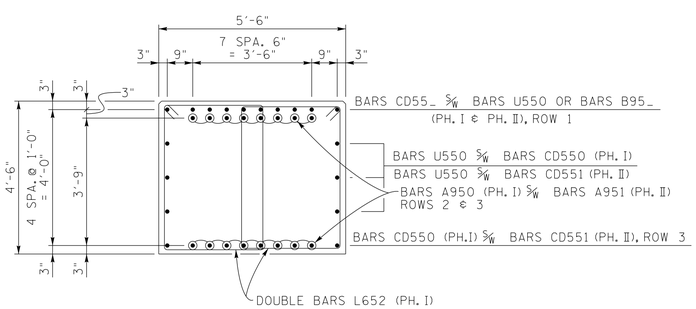


SECTION "B" - "B"

PIN: 105351.00
CONST. NO. 41056-3217-94

| PROJECT NO. | YEAR | SHEET NO. |
|---|---|---|
| BR-STP-50(29) | 2014 | |

REVISIONS

| NO. | DATE | BY | BRIEF DESCRIPTION |
|---|---|---|---|
| | | | |

STATE OF TENNESSEE
DEPARTMENT OF TRANSPORTATION

PIER NOS. 2 THRU 6 DETAILS
ALTERNATE "A"
STATE ROUTE 50
OVER
DUCK RIVER
STATION 37+10.00
LOG MILE 14.04
HICKMAN COUNTY
2014

HAROLD M. BROOKS JR.
STATE OF TENNESSEE
AGRICULTURE

CORRECT Wayne G. Sieger
ENGINEER OF STRUCTURES

U-52-23A

| | | | |
|---|---|---|---|
| DESIGNED BY | E. SLAYTON | DATE | 3-10 |
| DRAWN BY | P. MOSHER | DATE | 8-11 |
| SUPERVISED BY | MBC/HMB | DATE | 8-11 |
| CHECKED BY | E. SLAYTON | DATE | 4-14 |

PER1008.DGN

PIN: 105351.00
CONST. NO. 41056-3217-94

| PROJECT NO. | YEAR | SHEET NO. |
|---|---|---|
| BR-STP-50(29) | 2014 | |

REVISIONS

| NO. | DATE | BY | BRIEF DESCRIPTION |
|---|---|---|---|
| | | | |

NOTE: WHEN POURING CAP BEAM, PROVISIONS SHALL BE MADE FOR SETTING ANCHOR BOLTS. SEE STANDARD DRAWING STD-6-1. BOLT PROJ. = 11". SEE NOTE ON SHEET U-52-12.

NOTE: RISER BLOCKS TO BE POURED MONOLITHICALLY WITH CAP BEAM.

NOTE: ELASTOMERIC PADS SHALL BE IN PLACE A MINIMUM OF ONE DAY BEFORE BEING DISTURBED BY SETTING BEAMS ON CONCRETE. PLACE RUBBER BONDING CEMENT IN SUCH A WAY THAT VISIBLE CONCRETE SURFACES WILL NOT BE STAINED.

NOTE: COLUMN STEEL TO EXTEND 5'-8" INTO CAP IN PH. I.
COLUMN STEEL TO EXTEND 3'-8" INTO CAP IN PH. II.

NOTE: RISER BLOCK BEARING PAD SURFACE TO CONFORM TO BOTTOM OF BEAM GRADE.

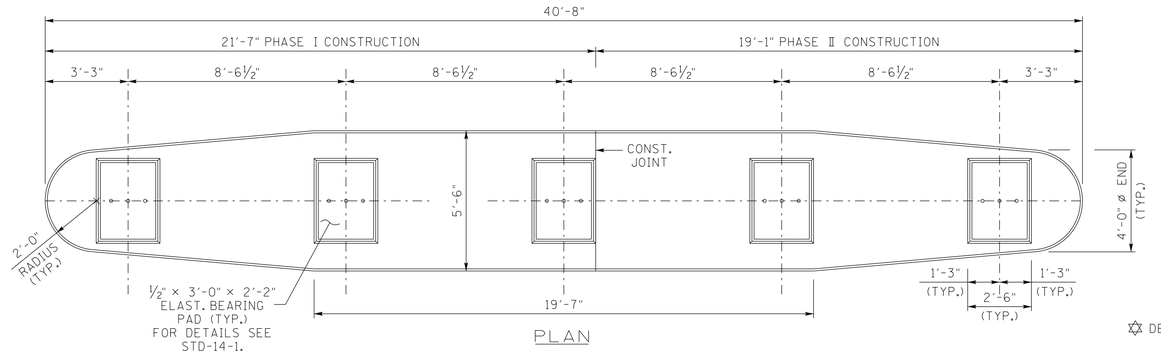


PLAN

✡ DENOTES: DBL. BARS H650
2 SPA. @ 1'-0" = 2'-0"

◐ DENOTES: DBL. BARS L652
2 SPA. @ 10¾" = 1'-9½"

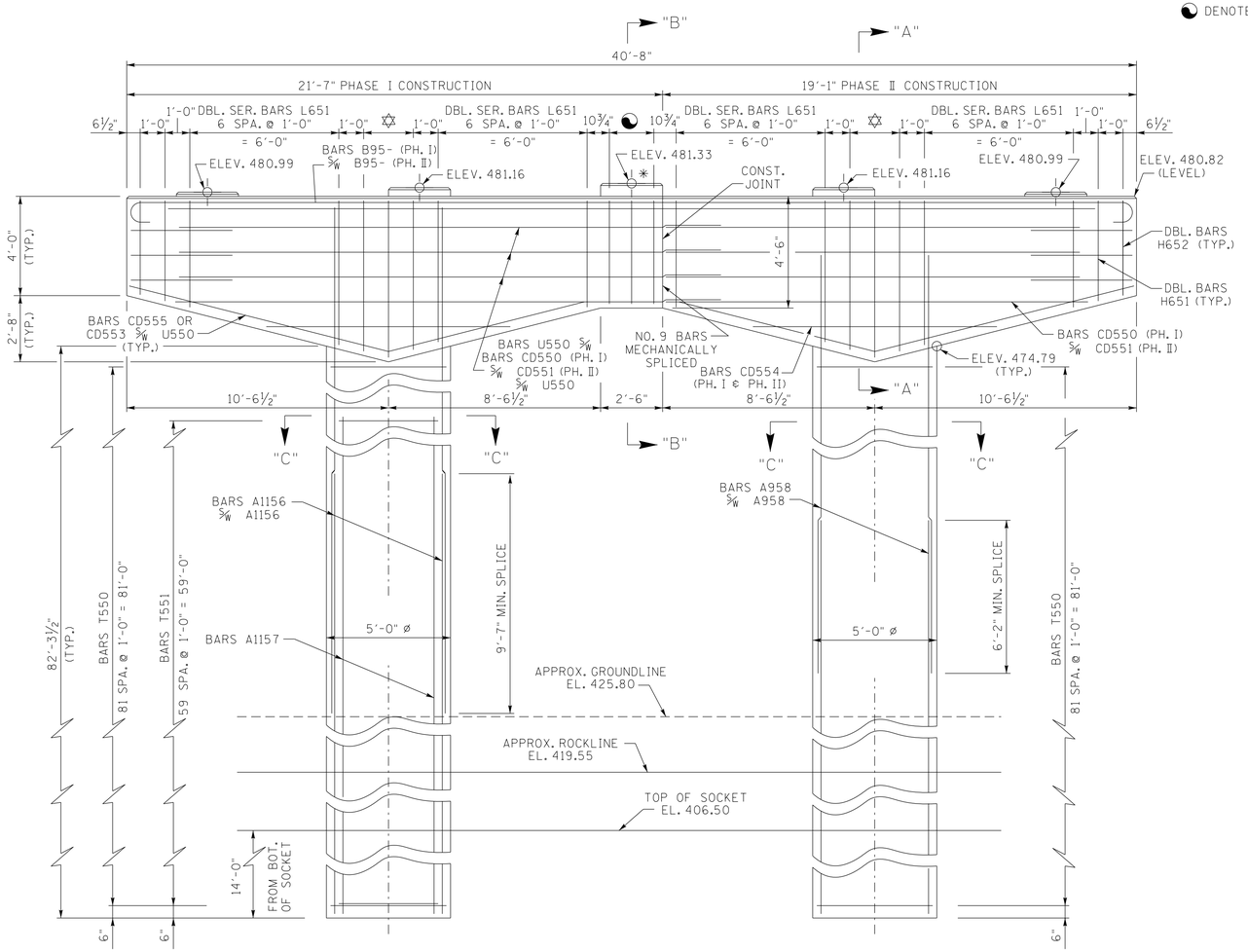


ELEVATION
(LOOKING FORWARD ON SURVEY)

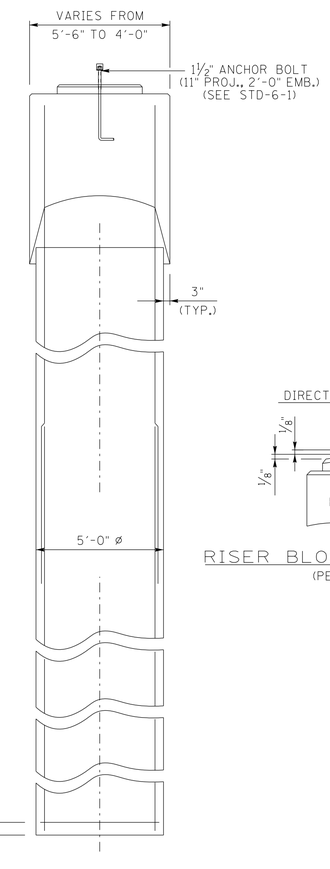


END ELEVATION

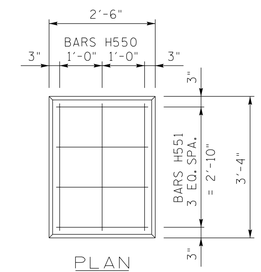


PLAN

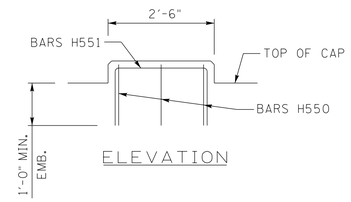


ELEVATION

RISER BLOCK REINFORCING DETAIL

✳ DENOTES: RISER BLOCK REQUIRES REINFORCEMENT

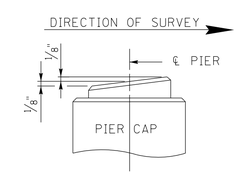


RISER BLOCK SLOPE DETAIL
(PER RISER BLOCK)

ESTIMATED QUANTITIES

| CLASS "A" CONCRETE (BRIDGES) C.Y. | STEEL BAR REINFORCEMENT (BRIDGES) LBS. | CLASS "S" DRILLED SHAFT CONCRETE C.Y. |
|---|---|---|
| 95 | 43,830 | 65 |

STATE OF TENNESSEE
DEPARTMENT OF TRANSPORTATION

PIER NO. 7
ALTERNATE "A"
STATE ROUTE 50
OVER
DUCK RIVER
STATION 37+10.00
LOG MILE 14.04
HICKMAN COUNTY
2014

HARDIE M. BROOKS, JR. STATE OF TENNESSEE

CORRECT Wayne G. Sieg
ENGINEER OF STRUCTURES

| | | | |
|---|---|---|---|
| DESIGNED BY | E. SLAYTON | DATE | 3-10 |
| DRAWN BY | P. MOSHER | DATE | 8-11 |
| SUPERVISED BY | MBC/HMB | DATE | 8-11 |
| CHECKED BY | E. SLAYTON | DATE | 4-14 |

U-52-24

PER1008.DGN

PIN: 105351.00
CONST. NO. 41056-3217-94

| PROJECT NO. | YEAR | SHEET NO. |
|---|---|---|
| BR-STP-50(29) | 2014 | |

REVISIONS

| NO. | DATE | BY | BRIEF DESCRIPTION |
|---|---|---|---|
| | | | |

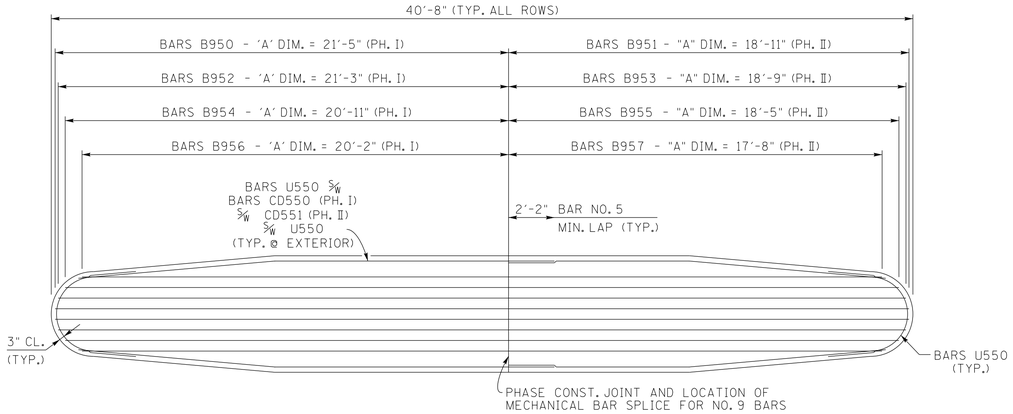


ROW 1

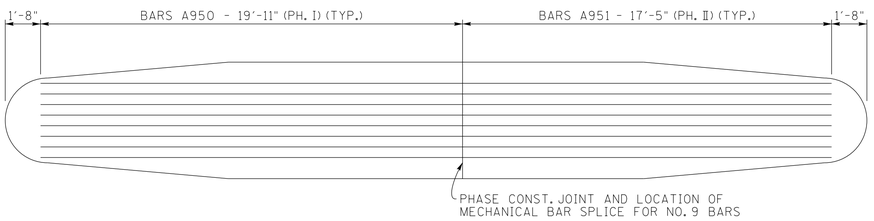


ROWS 2 AND 3

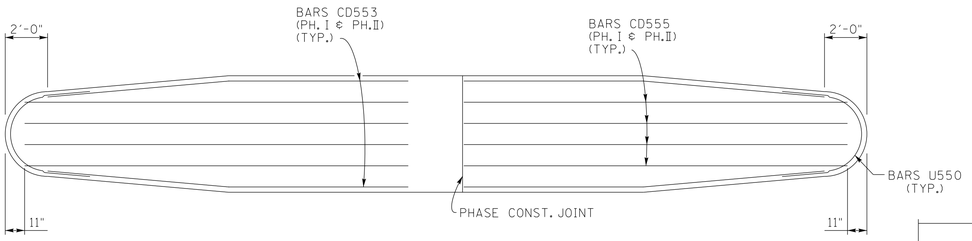


ROW 4

PLAN OF MAIN REINFORCEMENT

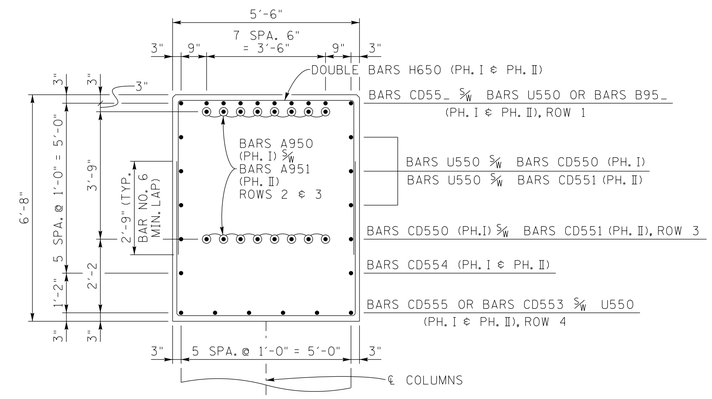


SECTION "A" - "A"

(TYP. ADJ. TO COLUMN)

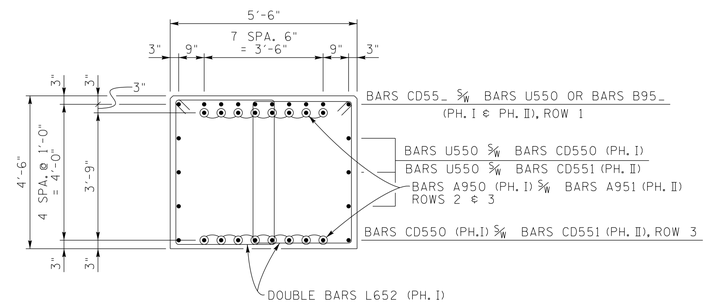


SECTION "B" - "B"

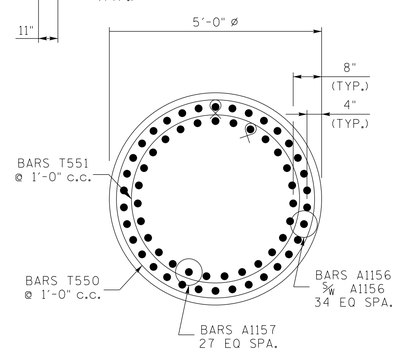


PH. 1 COLUMN

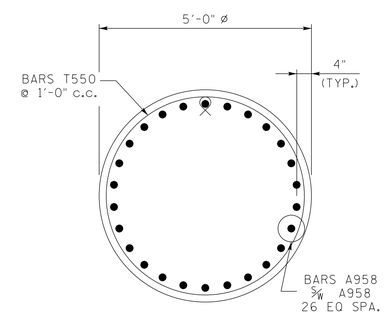


PH. 2 COLUMN

SECTION "C"-"C"

STATE OF TENNESSEE
DEPARTMENT OF TRANSPORTATION

PIER NO. 7 DETAILS
ALTERNATE "A"
STATE ROUTE 50
OVER
DUCK RIVER
STATION 37+10.00
LOG MILE 14.04
HICKMAN COUNTY
2014

HARDIE M. BROOKS, JR.
STATE OF TENNESSEE
AGRICULTURE

CORRECT Edward A. Wasserman
ENGINEER OF STRUCTURES

| | | | |
|---|---|---|---|
| DESIGNED BY | E. SLAYTON | DATE | 3-10 |
| DRAWN BY | P. MOSHER | DATE | 8-11 |
| SUPERVISED BY | MBC/HMB | DATE | 8-11 |
| CHECKED BY | E. SLAYTON | DATE | 4-14 |

U-52-25

PER1008.DGN

PIN: 105351.00
CONST. NO. 41056-3217-94

| PROJECT NO. | YEAR | SHEET NO. |
|---|---|---|
| BR-STP-50(29) | 2014 | |

REVISIONS

| NO. | DATE | BY | BRIEF DESCRIPTION |
|---|---|---|---|
| | | | |

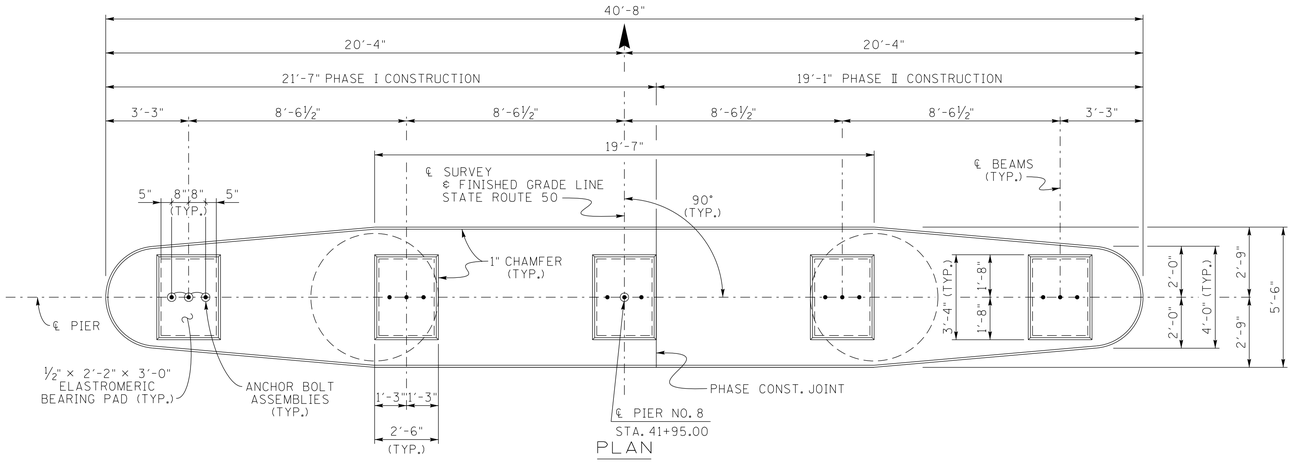


PLAN

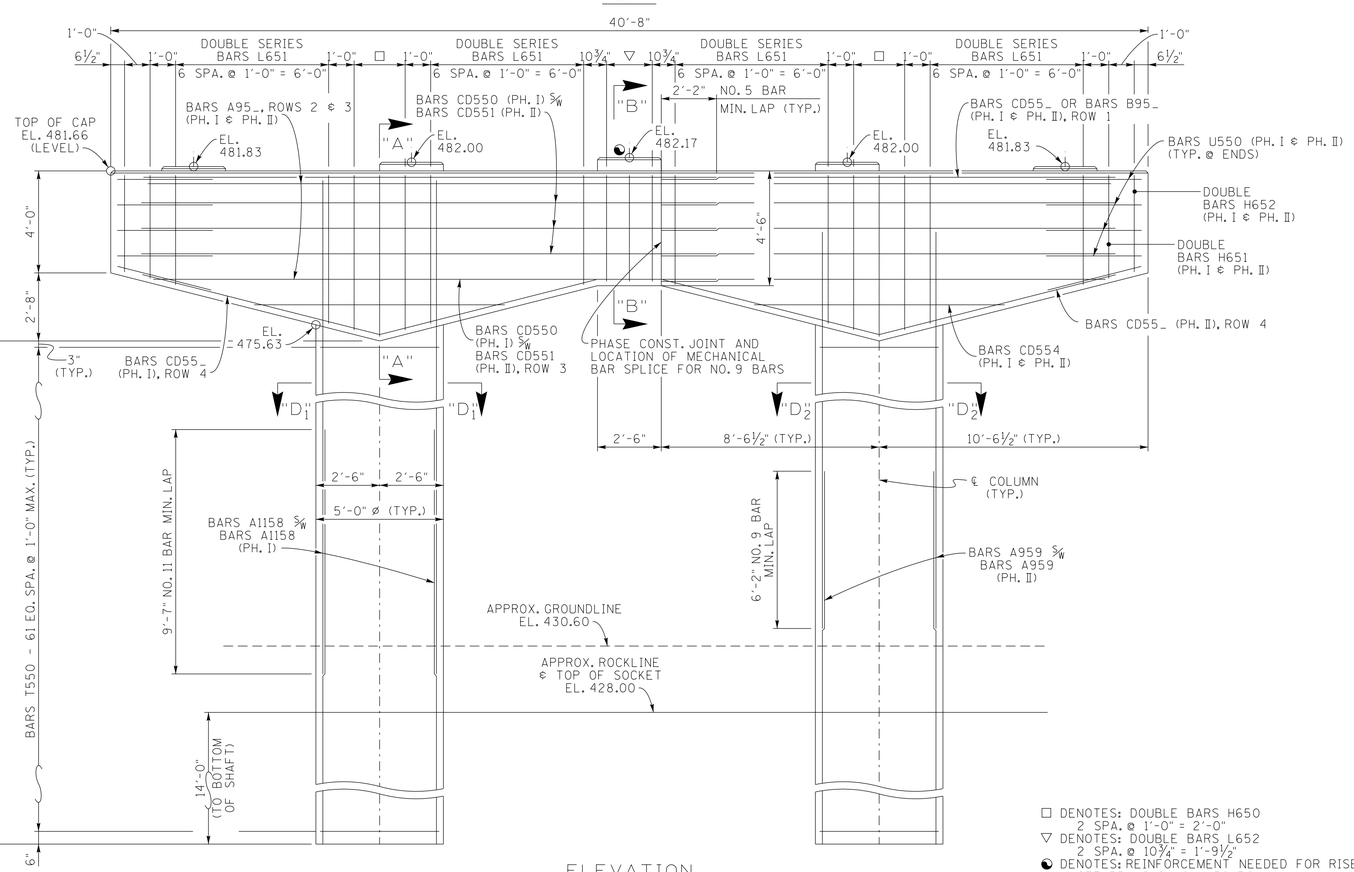


ELEVATION

(LOOKING FORWARD ON SURVEY)

☐ DENOTES: DOUBLE BARS H650
2 SPA. @ 1'-0" = 2'-0"
▽ DENOTES: DOUBLE BARS L652
2 SPA. @ 10¾" = 1'-9½"
◐ DENOTES: REINFORCEMENT NEEDED FOR RISER
SEE DRAWING NO. U-52-36

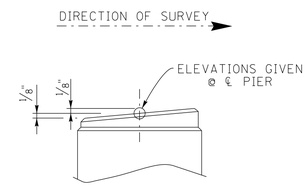


RISER BLOCK SLOPE DETAIL

(TYP. @ EACH RISER)

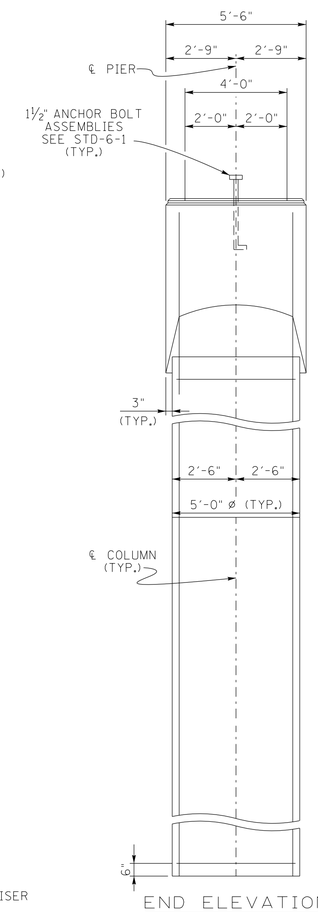


END ELEVATION

NOTE: WHEN POURING CAP BEAM, PROVISIONS SHALL BE MADE FOR SETTING ANCHOR BOLTS. SEE STANDARD DRAWING STD-6-1. BOLT PROJECTION 11". SEE NOTE ON SHEET U-52-12.

NOTE: RISER BLOCKS TO BE POURED MONOLITHICALLY WITH CAP BEAM.

NOTE: ELASTOMERIC PADS SHALL BE IN PLACE A MINIMUM OF ONE DAY BEFORE BEING DISTURBED BY SETTING BEAMS. PLACE RUBBER BONDING CEMENT IN SUCH A WAY THAT VISIBLE CONCRETE SURFACES WILL NOT BE STAINED.

NOTE: RISER BLOCK BEARING SURFACE TO CONFORM TO BOTTOM OF BEAM GRADE.

NOTE: COLUMN STEEL TO EXTEND 5'-8" MIN. INTO CAP BEAM IN PHASE I CONST. AND 3'-8" MIN. INTO CAP BEAM IN PHASE II CONST.

ESTIMATED QUANTITIES

| CLASS "A" CONCRETE (BRIDGES) C.Y. | STEEL BAR REINFORCEMENT (BRIDGES) LBS. | CLASS "S" DRILLED SHAFT CONCRETE C.Y. |
|---|---|---|
| 97 | 26,559 | 33 |

STATE OF TENNESSEE
DEPARTMENT OF TRANSPORTATION

PIER NO. 8
ALTERNATE "A"
STATE ROUTE 50
OVER
DUCK RIVER
STATION 37+10.00
LOG MILE 14.04
HICKMAN COUNTY
2014

HARDIE M. BROOKS, JR. STATE OF TENNESSEE 331 AGRICULTURE

CORRECT Wayne G. Sieger
ENGINEER OF STRUCTURES

| | | | |
|---|---|---|---|
| DESIGNED BY | ERIC SLAYTON | DATE | 08-11 |
| DRAWN BY | P. MOSHER (TLW) | DATE | 08-11 |
| SUPERVISED BY | MBC / HMB | DATE | 08-11 |
| CHECKED BY | ERIC SLAYTON | DATE | 04-14 |

U-52-26

PER1008.DGN

PIN: 105351.00
CONST. NO. 41056-3217-94

| PROJECT NO. | YEAR | SHEET NO. |
|---|---|---|
| BR-STP-50(29) | 2014 | |

REVISIONS

| NO. | DATE | BY | BRIEF DESCRIPTION |
|---|---|---|---|
| | | | |

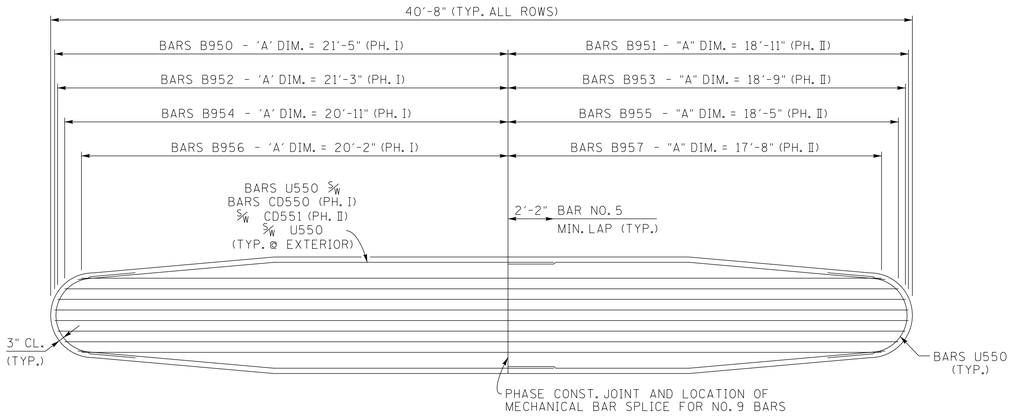


ROW 1

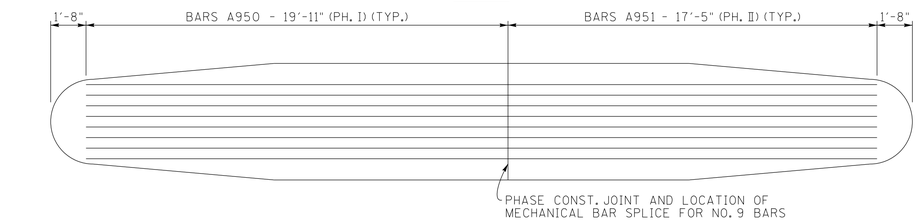


ROWS 2 AND 3

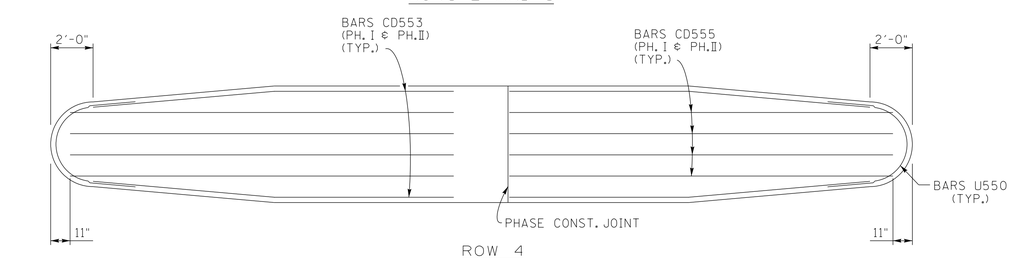


ROW 4

PLAN OF MAIN REINFORCEMENT

NOTE: THE CONTRACTOR SHALL OFFSET ANY REINFORCEMENT NECESSARY TO MAINTAIN 2" CLEARANCE TO PHASE CONSTRUCTION JOINT.

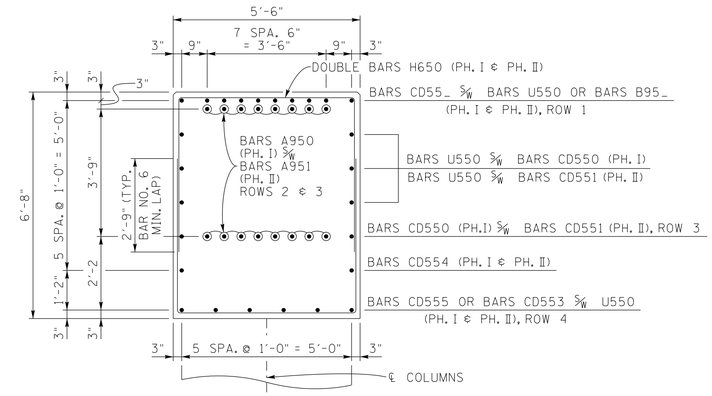


SECTION "A" - "A"

(TYP. ADJ. TO COLUMN)

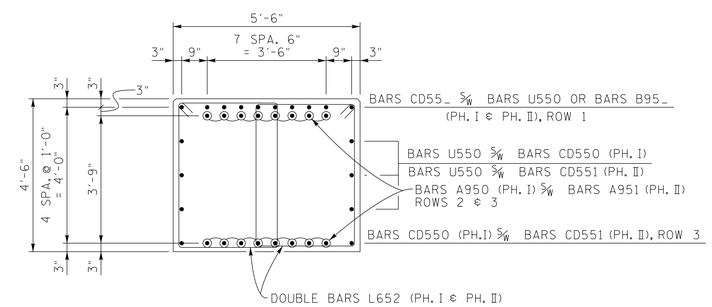


SECTION "B" - "B"

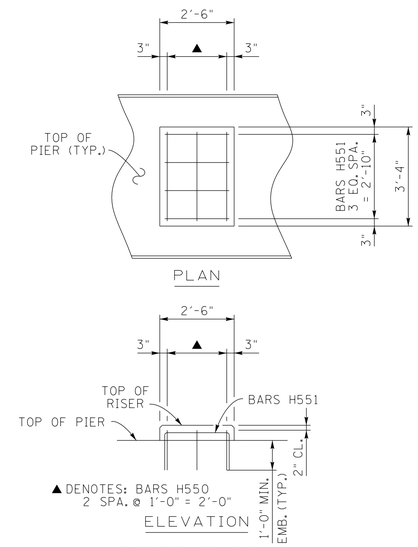


RISER BLOCK
REINFORCEMENT DETAIL

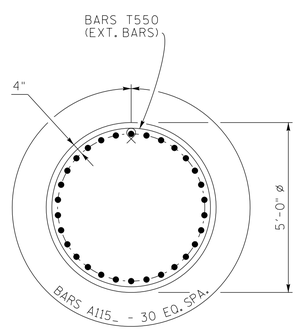


SECTION "D$_1^1$" - "D$_1^1$"

(PHASE I CONSTRUCTION)
(PIERS NO. 1 THRU 6 & 8)

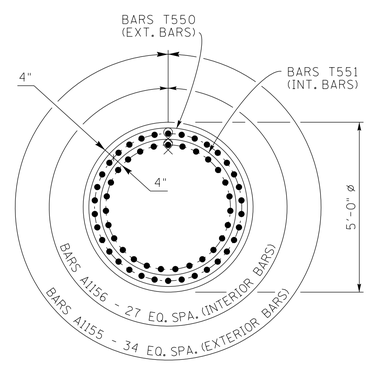


SECTION "D$_1^1$" - "D$_1^1$"

(PHASE I CONSTRUCTION)
(PIER NO. 7 ONLY)

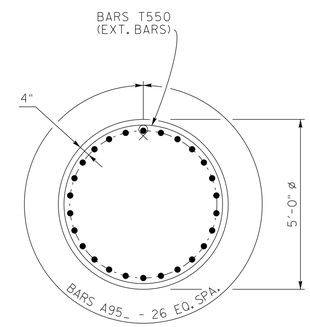


SECTION "D$_2^2$" - "D$_2^2$"

(PHASE II CONSTRUCTION)

STATE OF TENNESSEE
DEPARTMENT OF TRANSPORTATION

PIER NO. 8 DETAILS
ALTERNATE "A"
STATE ROUTE 50
OVER
DUCK RIVER
STATION 37+10.00
LOG MILE 14.04
HICKMAN COUNTY
2014

HARTIE M. BROOKS, JR.
STATE OF TENNESSEE
AGRICULTURE

CORRECT Wayne A. Tapp
ENGINEER OF STRUCTURES

| | | | |
|---|---|---|---|
| DESIGNED BY | ERIC SLAYTON | DATE | 08-11 |
| DRAWN BY | P. MOSHER (TLW) | DATE | 08-11 |
| SUPERVISED BY | MBC / HMB | DATE | 08-11 |
| CHECKED BY | ERIC SLAYTON | DATE | 04-14 |

U-52-27

PER1008ALTB.DGN

PIN 105351.00
CONST. NO. 41056-3217-94

| PROJECT NO. | YEAR | SHEET NO. |
|---|---|---|
| BR-STP-50(29) | 2014 | |

REVISIONS

| NO. | DATE | BY | BRIEF DESCRIPTION |
|---|---|---|---|
| | | | |

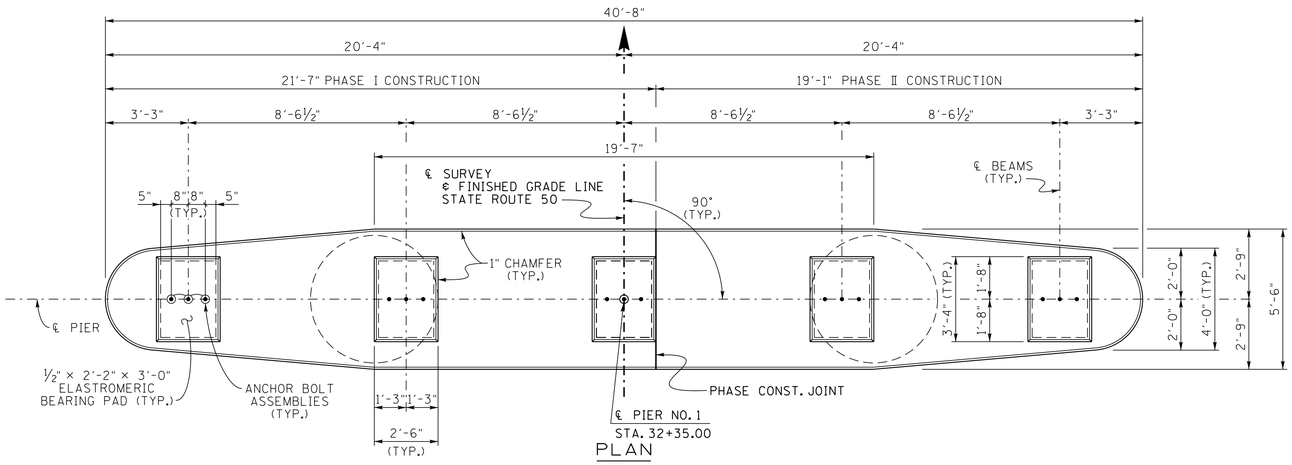


PLAN

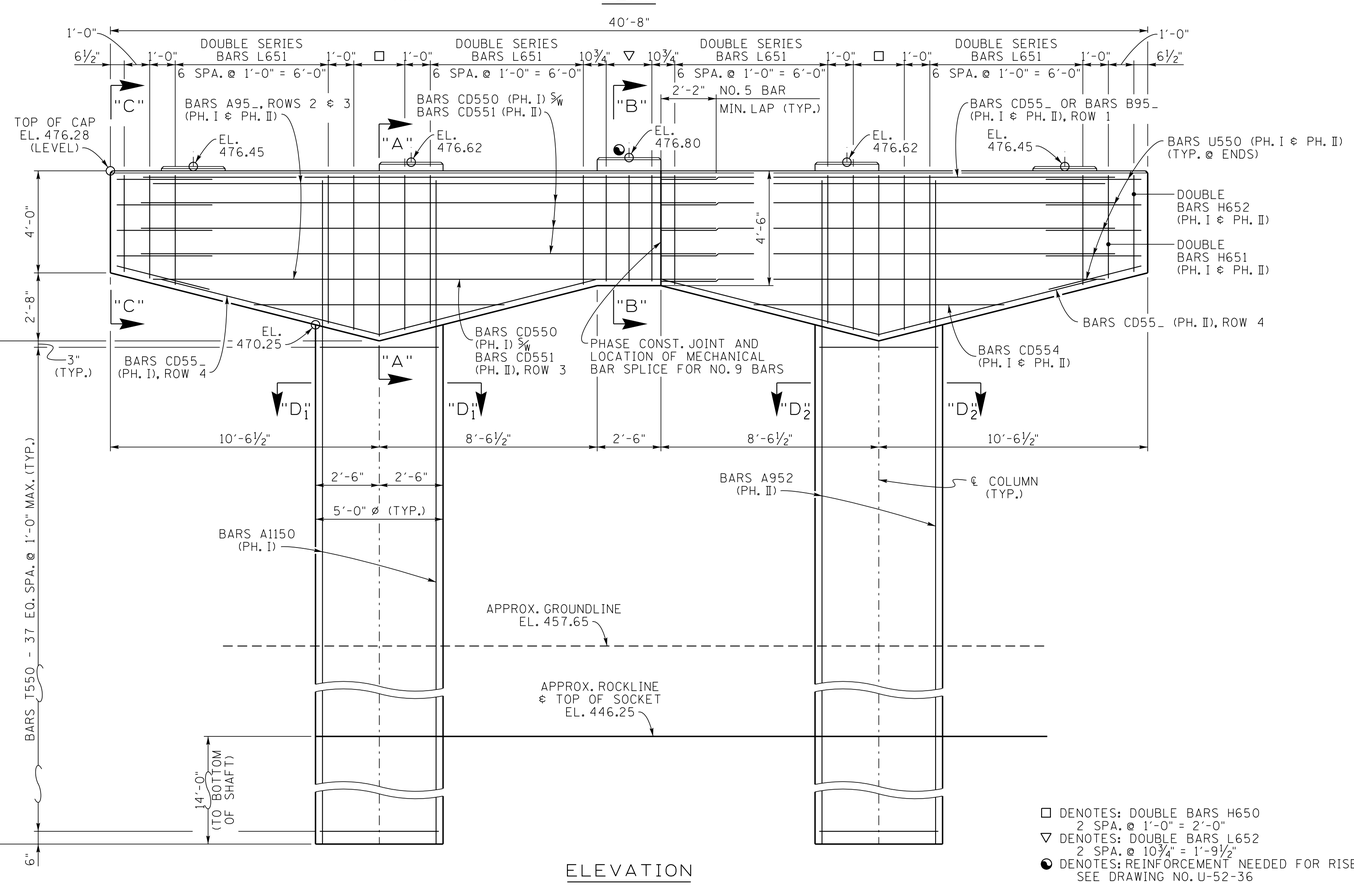


ELEVATION

(LOOKING FORWARD ON SURVEY)

□ DENOTES: DOUBLE BARS H650
2 SPA. @ 1'-0" = 2'-0"
▽ DENOTES: DOUBLE BARS L652
2 SPA. @ 10¾" = 1'-9½"
◐ DENOTES: REINFORCEMENT NEEDED FOR RISER SEE DRAWING NO. U-52-36

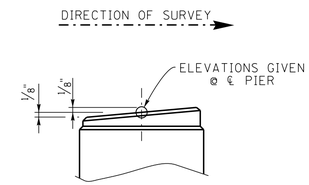


RISER BLOCK SLOPE DETAIL

(TYP. @ EACH RISER)

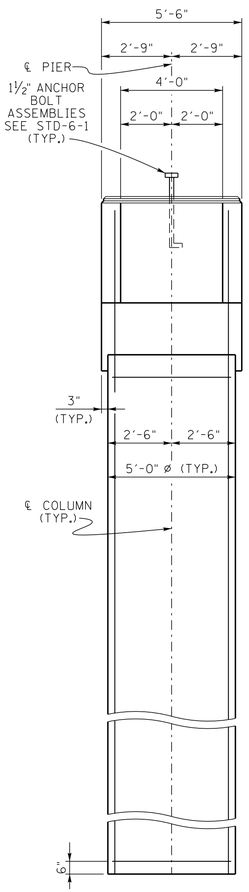


END ELEVATION

NOTE: WHEN POURING CAP BEAM, PROVISIONS SHALL BE MADE FOR SETTING ANCHOR BOLTS. SEE STANDARD DRAWING STD-6-1. BOLT PROJECTION 11". SEE NOTE ON DRAWING NO. U-52-12.

NOTE: RISER BLOCKS TO BE POURED MONOLITHICALLY WITH CAP BEAM.

NOTE: ELASTOMERIC PADS SHALL BE IN PLACE A MINIMUM OF ONE DAY BEFORE BEING DISTURBED BY SETTING BEAMS. PLACE RUBBER BONDING CEMENT IN SUCH A WAY THAT VISIBLE CONCRETE SURFACES WILL NOT BE STAINED.

NOTE: RISER BLOCK BEARING SURFACE TO CONFORM TO BOTTOM OF BEAM GRADE.

NOTE: COLUMN STEEL TO EXTEND 5'-8" MIN. INTO CAP BEAM IN PHASE I CONST. AND 3'-8" MIN. INTO CAP BEAM IN PHASE II CONST.

ESTIMATED QUANTITIES

| CLASS "A" CONCRETE (BRIDGES) C.Y. | STEEL BAR REINFORCEMENT (BRIDGES) LBS. | CLASS "S" DRILLED SHAFT CONCRETE C.Y. |
|---|---|---|
| 59 | 17,841 | 37 |

STATE OF TENNESSEE
DEPARTMENT OF TRANSPORTATION

PIER NO. 1
ALTERNATE "B"
STATE ROUTE 50
OVER
DUCK RIVER
STATION 37+10.00
LOG MILE 14.04
HICKMAN COUNTY
2014

HARDIE M. BROOKS, JR. STATE OF TENNESSEE

CORRECT Wayne G. Sieger
ENGINEER OF STRUCTURES

DESIGNED BY ERIC SLAYTON DATE 08-11
DRAWN BY T. WISEMAN DATE 08-11
SUPERVISED BY MBC / HMB DATE 08-11
CHECKED BY ERIC SLAYTON DATE ---11

U-52-28

PER1008ALTB.DGN

PIN 105351.00
CONST. NO. 41056-3217-94

| PROJECT NO. | YEAR | SHEET NO. |
|---|---|---|
| BR-STP-50(29) | 2014 | |

REVISIONS

| NO. | DATE | BY | BRIEF DESCRIPTION |
|---|---|---|---|
| | | | |

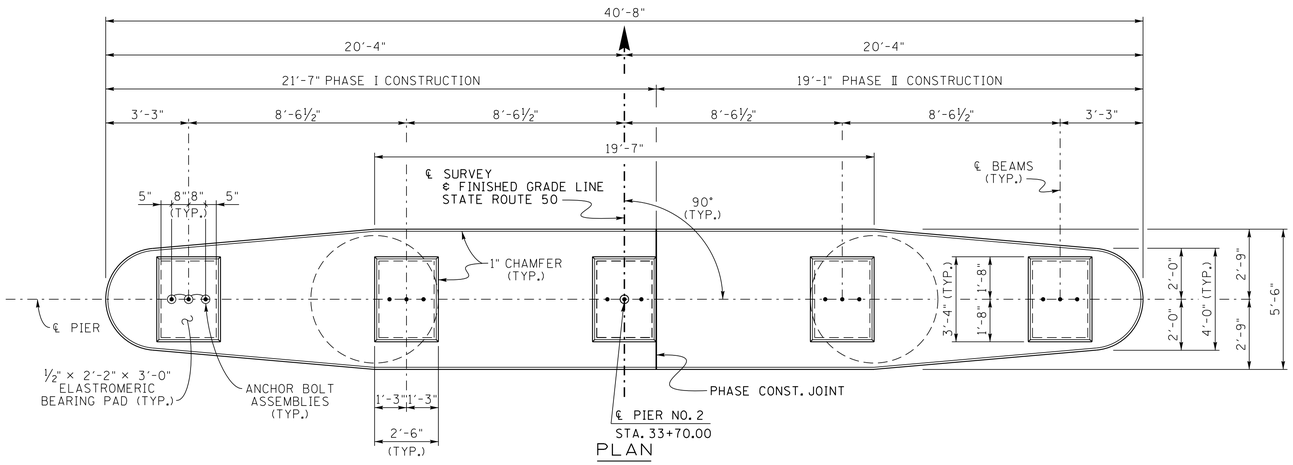


PLAN

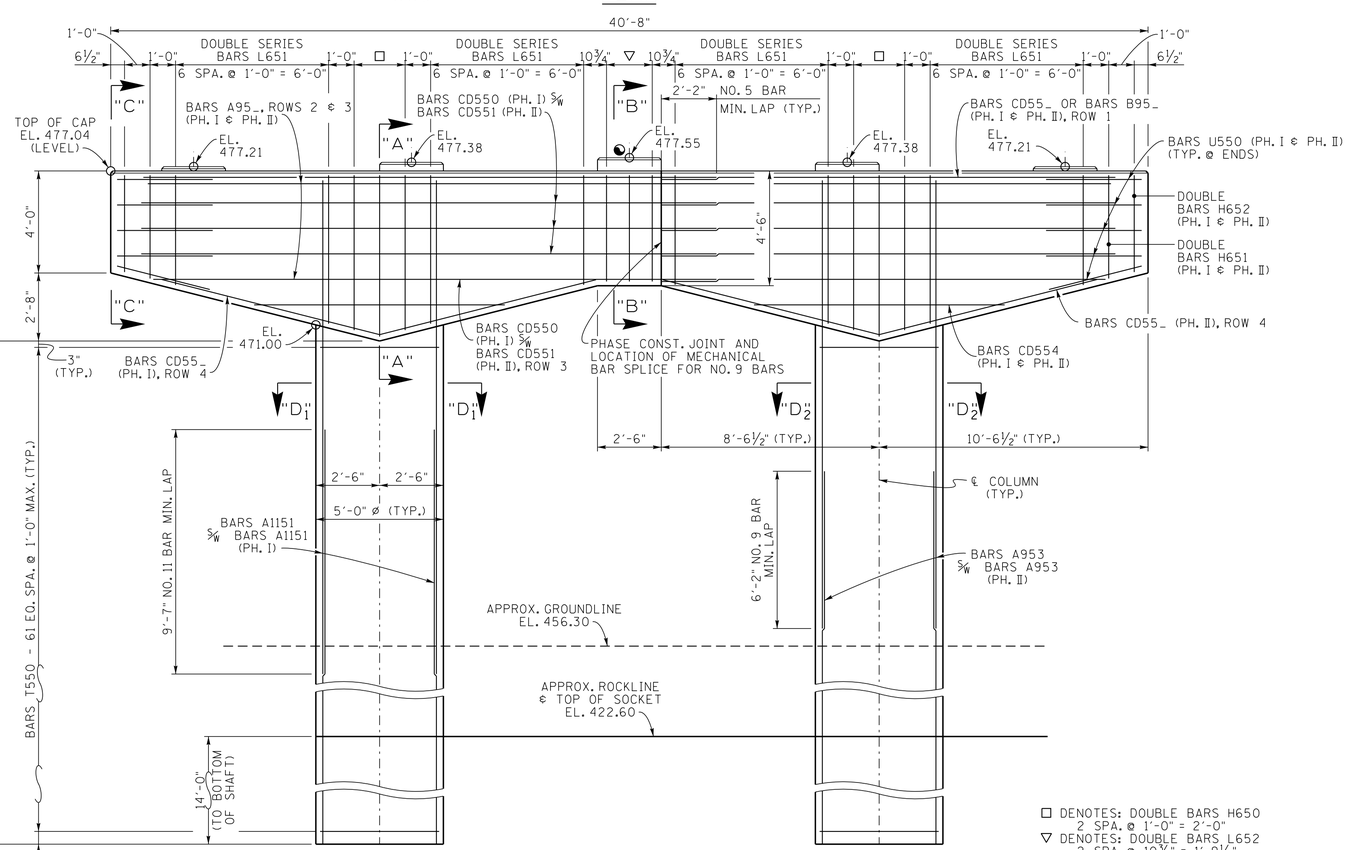


ELEVATION

(LOOKING FORWARD ON SURVEY)

□ DENOTES: DOUBLE BARS H650 2 SPA. @ 1'-0" = 2'-0"
▽ DENOTES: DOUBLE BARS L652 2 SPA. @ 10¾" = 1'-9½"
◐ DENOTES: REINFORCEMENT NEEDED FOR RISER SEE DRAWING NO. U-52-36

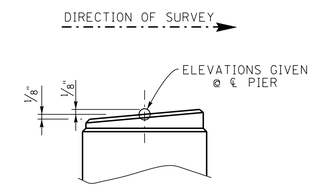


RISER BLOCK SLOPE DETAIL

(TYP. @ EACH RISER)

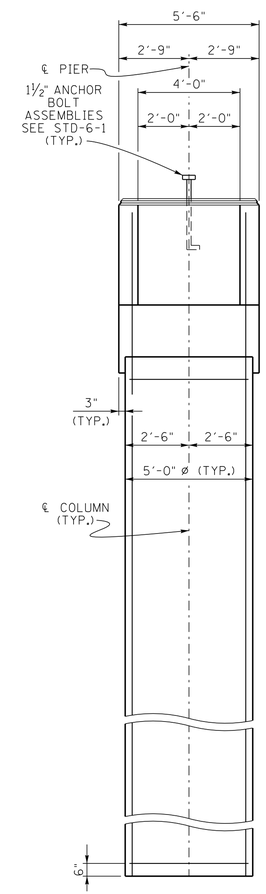


END ELEVATION

NOTE: WHEN POURING CAP BEAM, PROVISIONS SHALL BE MADE FOR SETTING ANCHOR BOLTS. SEE STANDARD DRAWING STD-6-1. BOLT PROJECTION 11". SEE NOTE ON DRAWING NO. U-52-12.

NOTE: RISER BLOCKS TO BE POURED MONOLITHICALLY WITH CAP BEAM.

NOTE: ELASTOMERIC PADS SHALL BE IN PLACE A MINIMUM OF ONE DAY BEFORE BEING DISTURBED BY SETTING BEAMS. PLACE RUBBER BONDING CEMENT IN SUCH A WAY THAT VISIBLE CONCRETE SURFACES WILL NOT BE STAINED.

NOTE: RISER BLOCK BEARING SURFACE TO CONFORM TO BOTTOM OF BEAM GRADE.

NOTE: COLUMN STEEL TO EXTEND 5'-8" MIN. INTO CAP BEAM IN PHASE I CONST. AND 3'-8" MIN. INTO CAP BEAM IN PHASE II CONST.

ESTIMATED QUANTITIES

| CLASS "A" CONCRETE (BRIDGES) C.Y. | STEEL BAR REINFORCEMENT (BRIDGES) LBS. | CLASS "S" DRILLED SHAFT CONCRETE C.Y. |
|---|---|---|
| 62 | 26,739 | 69 |

STATE OF TENNESSEE
DEPARTMENT OF TRANSPORTATION

PIER NO. 2
ALTERNATE "B"
STATE ROUTE 50
OVER
DUCK RIVER
STATION 37+10.00
LOG MILE 14.04
HICKMAN COUNTY
2014

HARDIE M. BROOKS, JR. STATE OF TENNESSEE

CORRECT Wayne J. Tapp
ENGINEER OF STRUCTURES

DESIGNED BY ERIC SLAYTON DATE 08-11
DRAWN BY T. WISEMAN DATE 08-11
SUPERVISED BY MBC / HMB DATE 08-11
CHECKED BY ERIC SLAYTON DATE --11

U-52-29

PER1008ALTB.DGN

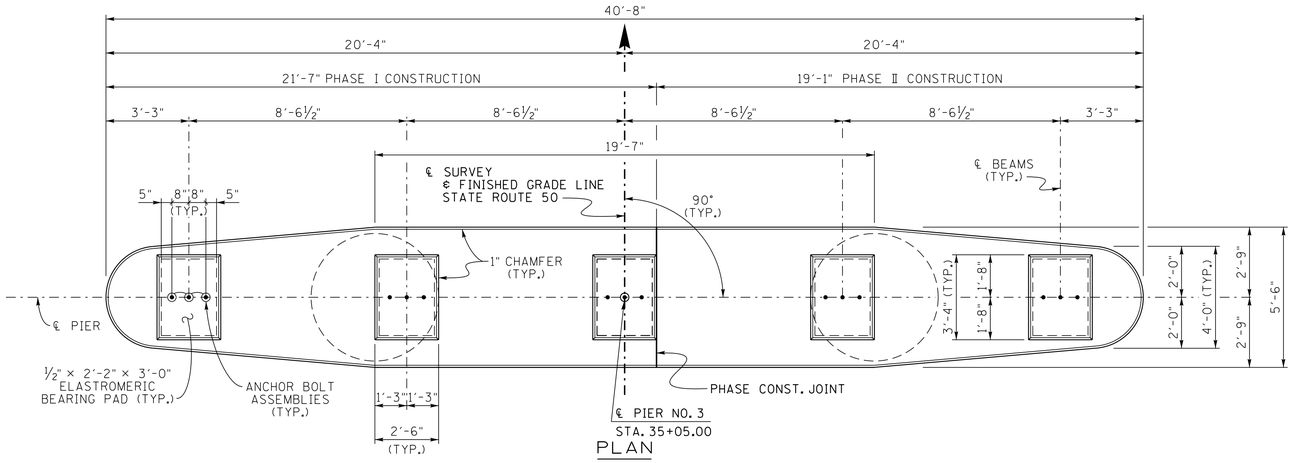


PLAN

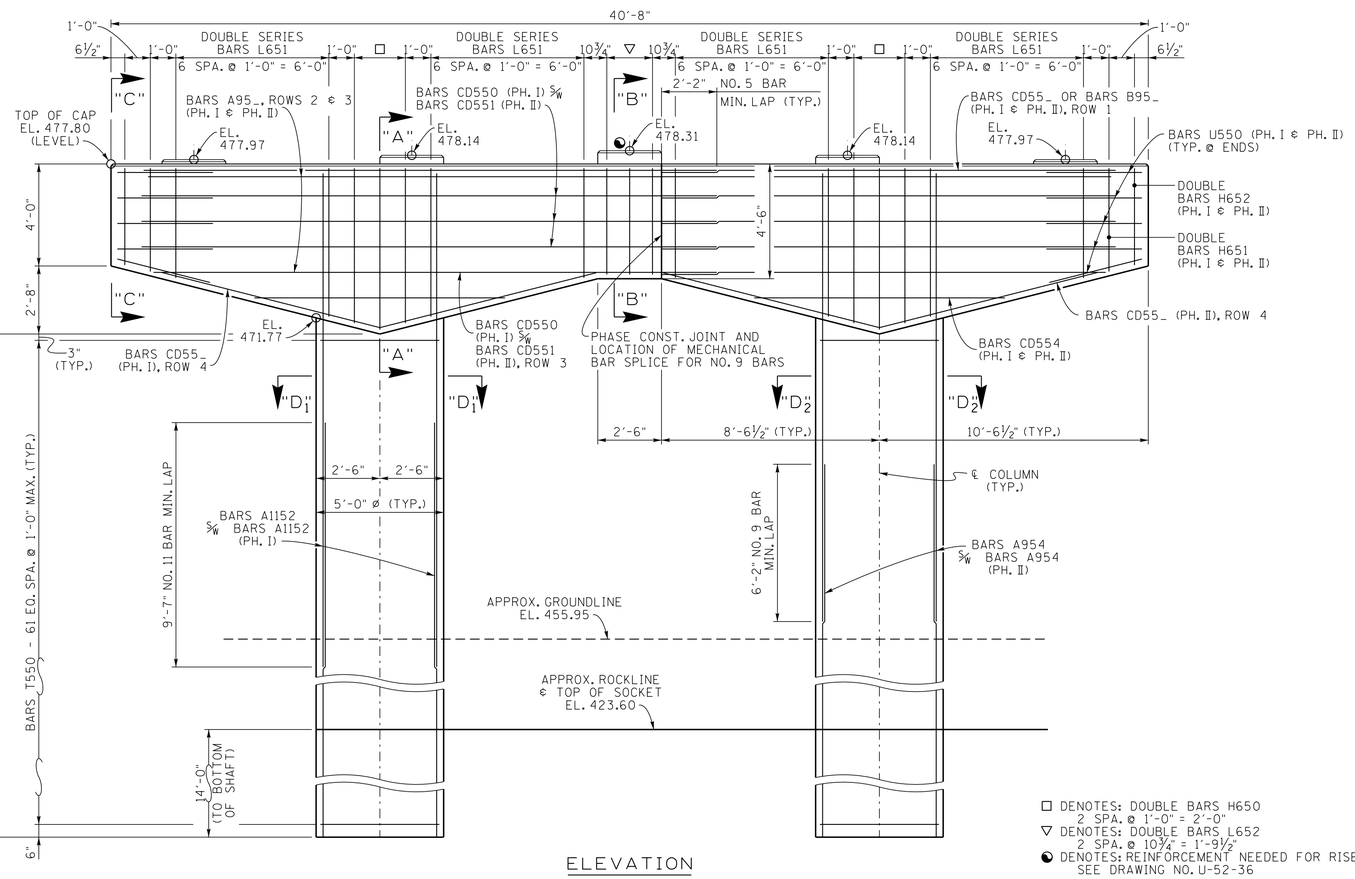


ELEVATION

(LOOKING FORWARD ON SURVEY)

□ DENOTES: DOUBLE BARS H650
2 SPA. @ 1'-0" = 2'-0"

▽ DENOTES: DOUBLE BARS L652
2 SPA. @ 10¾" = 1'-9½"

◐ DENOTES: REINFORCEMENT NEEDED FOR RISER SEE DRAWING NO. U-52-36

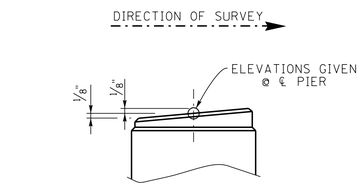


RISER BLOCK SLOPE DETAIL

(TYP. @ EACH RISER)

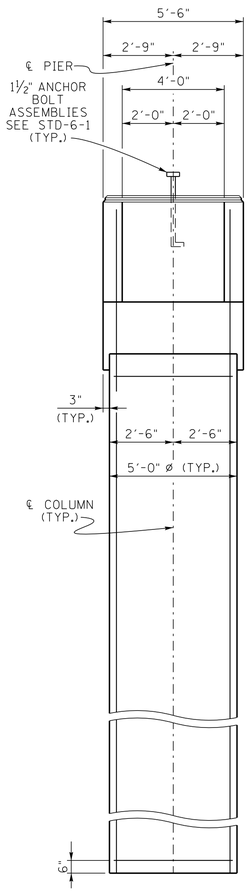


END ELEVATION

NOTE: WHEN POURING CAP BEAM, PROVISIONS SHALL BE MADE FOR SETTING ANCHOR BOLTS. SEE STANDARD DRAWING STD-6-1. BOLT PROJECTION 11". SEE NOTE ON DRAWING NO. U-52-12.

NOTE: RISER BLOCKS TO BE POURED MONOLITHICALLY WITH CAP BEAM.

NOTE: ELASTOMERIC PADS SHALL BE IN PLACE A MINIMUM OF ONE DAY BEFORE BEING DISTURBED BY SETTING BEAMS. PLACE RUBBER BONDING CEMENT IN SUCH A WAY THAT VISIBLE CONCRETE SURFACES WILL NOT BE STAINED.

NOTE: RISER BLOCK BEARING SURFACE TO CONFORM TO BOTTOM OF BEAM GRADE.

NOTE: COLUMN STEEL TO EXTEND 5'-8" MIN. INTO CAP BEAM IN PHASE I CONST. AND 3'-8" MIN. INTO CAP BEAM IN PHASE II CONST.

PIN 105351.00
CONST. NO. 41056-3217-94

| PROJECT NO. | YEAR | SHEET NO. |
|---|---|---|
| BR-STP-50(29) | 2014 | |

REVISIONS

| NO. | DATE | BY | BRIEF DESCRIPTION |
|---|---|---|---|
| | | | |

ESTIMATED QUANTITIES

| CLASS "A" CONCRETE (BRIDGES) C.Y. | STEEL BAR REINFORCEMENT (BRIDGES) LBS. | CLASS "S" DRILLED SHAFT CONCRETE C.Y. |
|---|---|---|
| 64 | 26,683 | 67 |

STATE OF TENNESSEE
DEPARTMENT OF TRANSPORTATION

PIER NO. 3
ALTERNATE "B"
STATE ROUTE 50
OVER
DUCK RIVER
STATION 37+10.00
LOG MILE 14.04
HICKMAN COUNTY
2014

HARDIE M. BROOKS, JR. STATE OF TENNESSEE

CORRECT Wayne J. Sieger
ENGINEER OF STRUCTURES

DESIGNED BY ERIC SLAYTON DATE 08-11
DRAWN BY T. WISEMAN DATE 08-11
SUPERVISED BY MBC / HMB DATE 08-11
CHECKED BY ERIC SLAYTON DATE ---11

U-52-30

PER1008ALTB.DGN

PIN 105351.00
CONST. NO. 41056-3217-94

| PROJECT NO. | YEAR | SHEET NO. |
|---|---|---|
| BR-STP-50(29) | 2014 | |

REVISIONS

| NO. | DATE | BY | BRIEF DESCRIPTION |
|---|---|---|---|
| | | | |

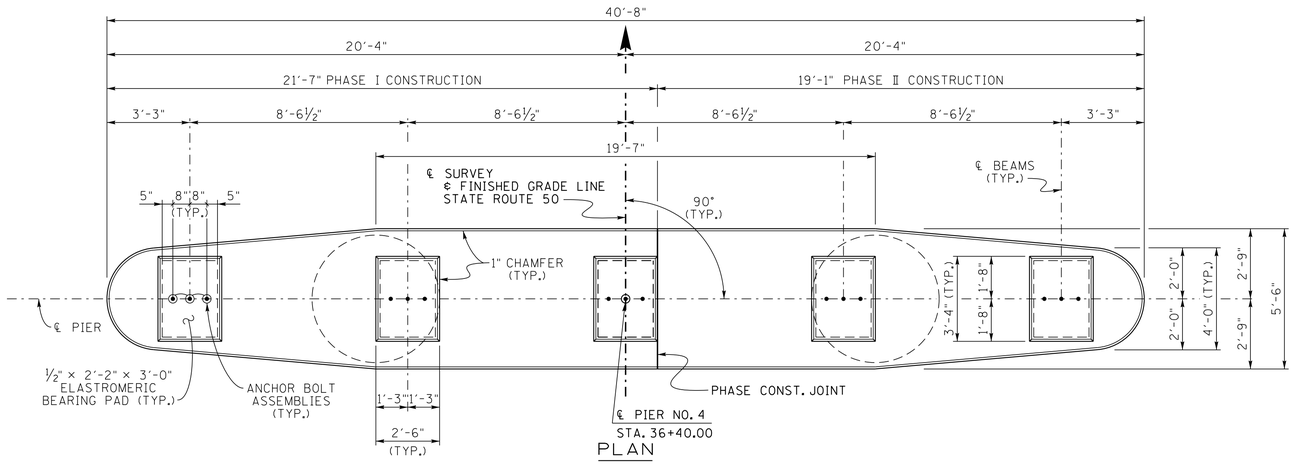


PLAN

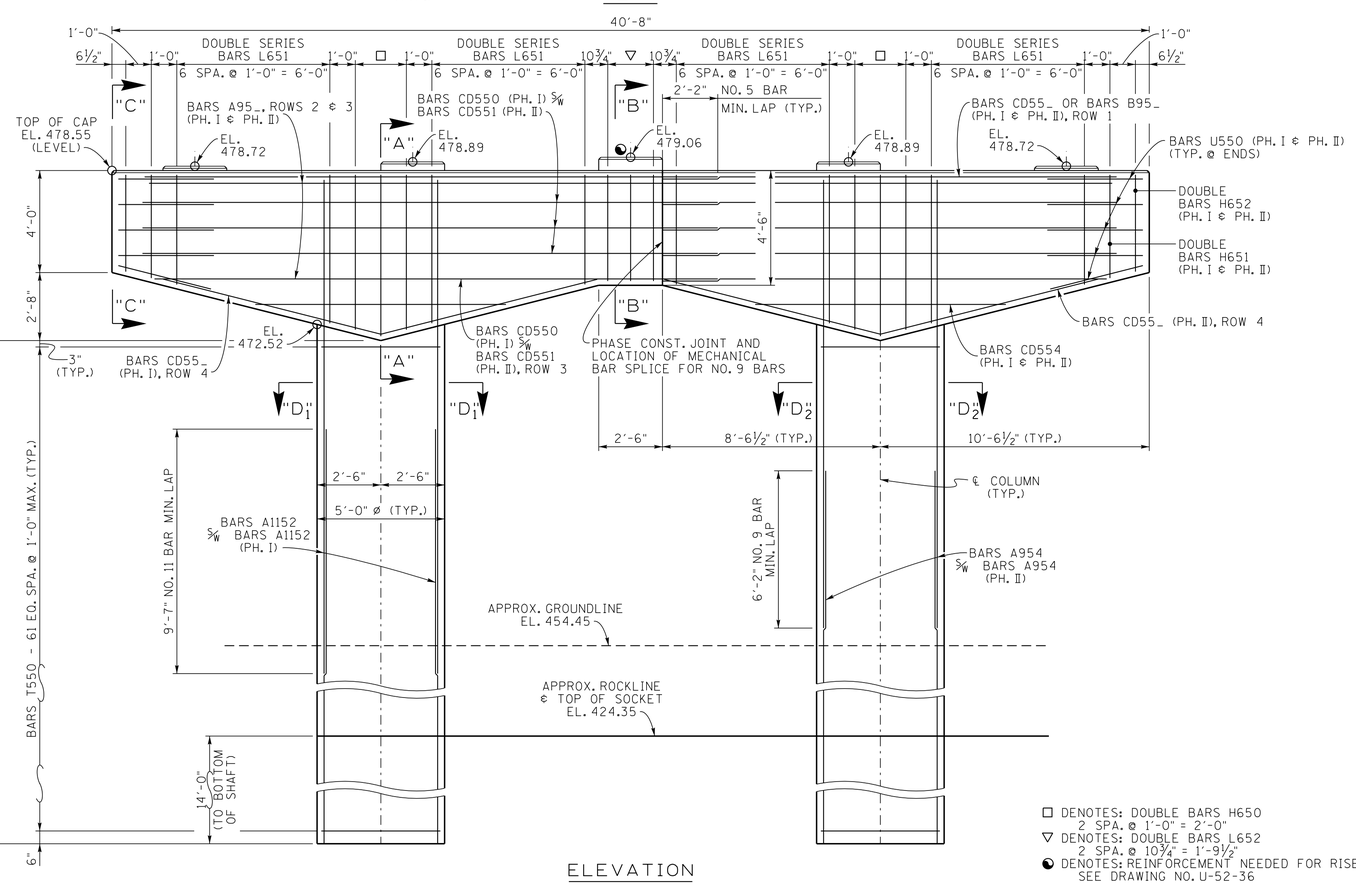


ELEVATION

(LOOKING FORWARD ON SURVEY)

□ DENOTES: DOUBLE BARS H650
2 SPA. @ 1'-0" = 2'-0"
▽ DENOTES: DOUBLE BARS L652
2 SPA. @ 10¾" = 1'-9½"
◐ DENOTES: REINFORCEMENT NEEDED FOR RISER SEE DRAWING NO. U-52-36

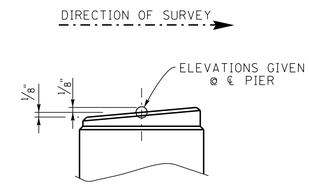


RISER BLOCK SLOPE DETAIL

(TYP. @ EACH RISER)

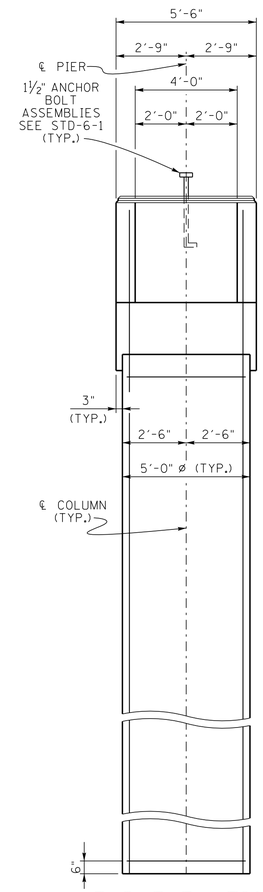


END ELEVATION

NOTE: WHEN POURING CAP BEAM, PROVISIONS SHALL BE MADE FOR SETTING ANCHOR BOLTS. SEE STANDARD DRAWING STD-6-1. BOLT PROJECTION 11". SEE NOTE ON DRAWING NO. U-52-12.

NOTE: RISER BLOCKS TO BE POURED MONOLITHICALLY WITH CAP BEAM.

NOTE: ELASTOMERIC PADS SHALL BE IN PLACE A MINIMUM OF ONE DAY BEFORE BEING DISTURBED BY SETTING BEAMS. PLACE RUBBER BONDING CEMENT IN SUCH A WAY THAT VISIBLE CONCRETE SURFACES WILL NOT BE STAINED.

NOTE: RISER BLOCK BEARING SURFACE TO CONFORM TO BOTTOM OF BEAM GRADE.

NOTE: COLUMN STEEL TO EXTEND 5'-8" MIN. INTO CAP BEAM IN PHASE I CONST. AND 3'-8" MIN. INTO CAP BEAM IN PHASE II CONST.

ESTIMATED QUANTITIES

| CLASS "A" CONCRETE (BRIDGES) C.Y. | STEEL BAR REINFORCEMENT (BRIDGES) LBS. | CLASS "S" DRILLED SHAFT CONCRETE C.Y. |
|---|---|---|
| 67 | 26,683 | 64 |

STATE OF TENNESSEE
DEPARTMENT OF TRANSPORTATION

PIER NO. 4
ALTERNATE "B"
STATE ROUTE 50
OVER
DUCK RIVER
STATION 37+10.00
LOG MILE 14.04
HICKMAN COUNTY
2014

HARDIE M. BROOKS, JR. STATE OF TENNESSEE

CORRECT Wayne G. Sieger
ENGINEER OF STRUCTURES

| | | | |
|---|---|---|---|
| DESIGNED BY | ERIC SLAYTON | DATE | 08-11 |
| DRAWN BY | T. WISEMAN | DATE | 08-11 |
| SUPERVISED BY | MBC / HMB | DATE | 08-11 |
| CHECKED BY | ERIC SLAYTON | DATE | --11 |

U-52-31

PER1008ALTB.DGN

PIN 105351.00
CONST. NO. 41056-3217-94

| PROJECT NO. | YEAR | SHEET NO. |
|---|---|---|
| BR-STP-50(29) | 2014 | |

REVISIONS

| NO. | DATE | BY | BRIEF DESCRIPTION |
|---|---|---|---|
| | | | |

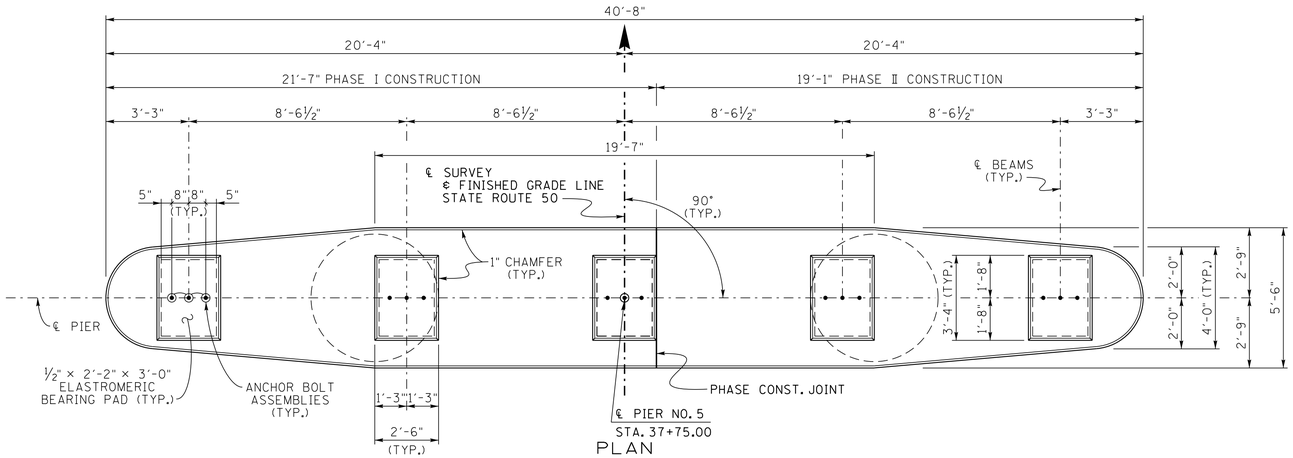


PLAN

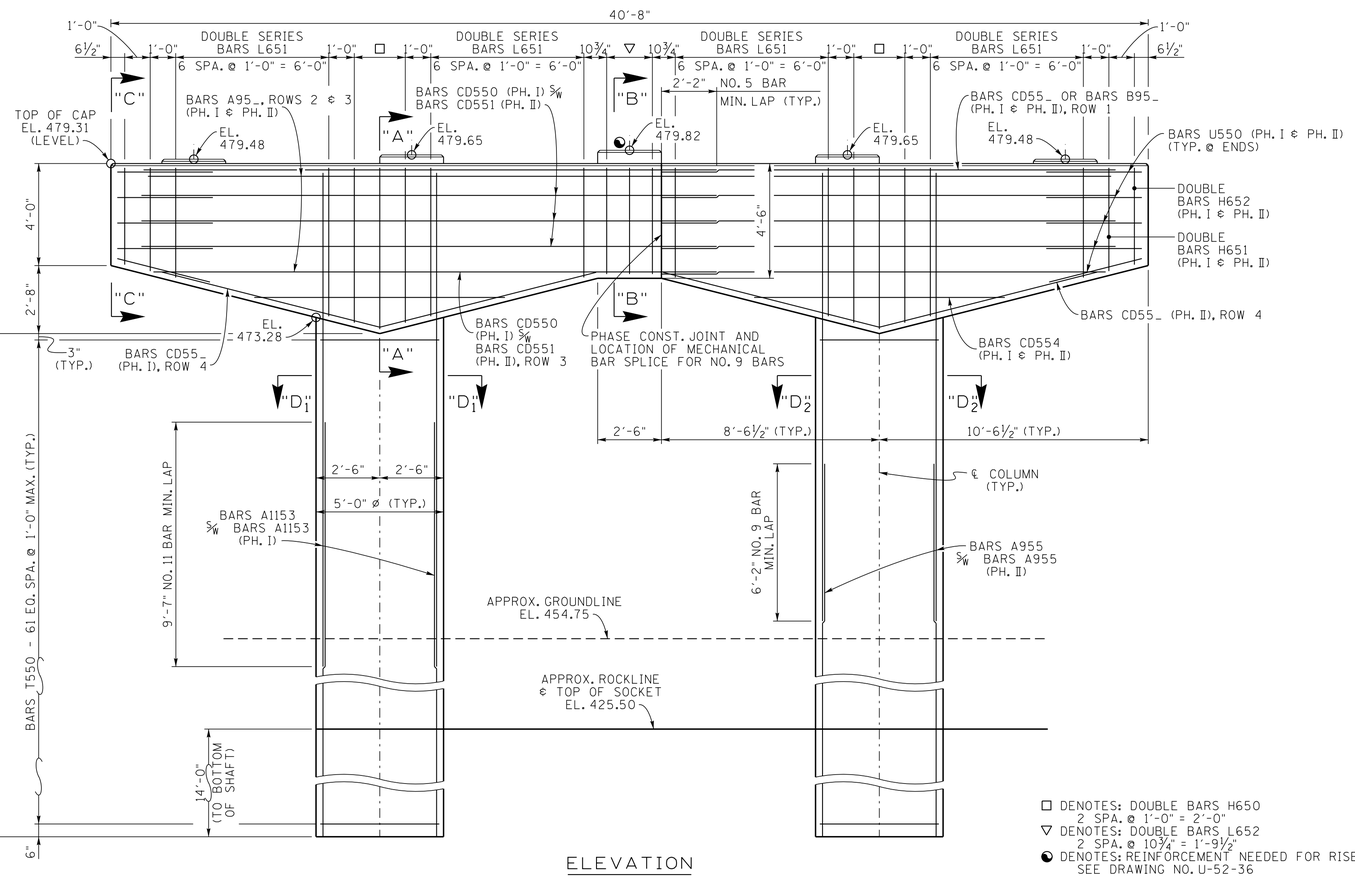


ELEVATION

(LOOKING FORWARD ON SURVEY)

□ DENOTES: DOUBLE BARS H650
2 SPA. @ 1'-0" = 2'-0"
▽ DENOTES: DOUBLE BARS L652
2 SPA. @ 10¾" = 1'-9½"
◐ DENOTES: REINFORCEMENT NEEDED FOR RISER SEE DRAWING NO. U-52-36

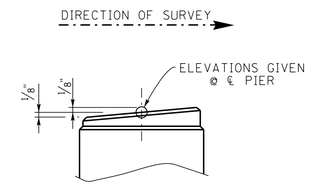


RISER BLOCK SLOPE DETAIL

(TYP. @ EACH RISER)

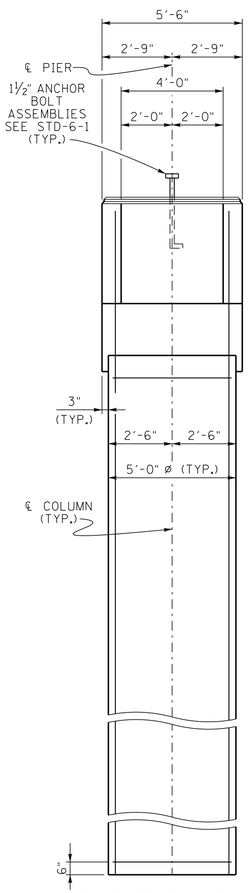


END ELEVATION

NOTE: WHEN POURING CAP BEAM, PROVISIONS SHALL BE MADE FOR SETTING ANCHOR BOLTS. SEE STANDARD DRAWING STD-6-1. BOLT PROJECTION 11". SEE NOTE ON DRAWING NO. U-52-12.

NOTE: RISER BLOCKS TO BE POURED MONOLITHICALLY WITH CAP BEAM.

NOTE: ELASTOMERIC PADS SHALL BE IN PLACE A MINIMUM OF ONE DAY BEFORE BEING DISTURBED BY SETTING BEAMS. PLACE RUBBER BONDING CEMENT IN SUCH A WAY THAT VISIBLE CONCRETE SURFACES WILL NOT BE STAINED.

NOTE: RISER BLOCK BEARING SURFACE TO CONFORM TO BOTTOM OF BEAM GRADE.

NOTE: COLUMN STEEL TO EXTEND 5'-8" MIN. INTO CAP BEAM IN PHASE I CONST. AND 3'-8" MIN. INTO CAP BEAM IN PHASE II CONST.

ESTIMATED QUANTITIES

| CLASS "A" CONCRETE (BRIDGES) C.Y. | STEEL BAR REINFORCEMENT (BRIDGES) LBS. | CLASS "S" DRILLED SHAFT CONCRETE C.Y. |
|---|---|---|
| 68 | 26,574 | 63 |

STATE OF TENNESSEE
DEPARTMENT OF TRANSPORTATION

PIER NO. 5
ALTERNATE "B"
STATE ROUTE 50
OVER
DUCK RIVER
STATION 37+10.00
LOG MILE 14.04
HICKMAN COUNTY
2014

HARDIE M. BROOKS, JR. STATE OF TENNESSEE

CORRECT Wayne J. Sieger
ENGINEER OF STRUCTURES

DESIGNED BY ERIC SLAYTON DATE 08-11
DRAWN BY T. WISEMAN DATE 08-11
SUPERVISED BY MBC / HMB DATE 08-11
CHECKED BY ERIC SLAYTON DATE ---11

U-52-32

PER1008ALTB.DGN

PIN 105351.00
CONST. NO. 41056-3217-94

| PROJECT NO. | YEAR | SHEET NO. |
|---|---|---|
| BR-STP-50(29) | 2014 | |

REVISIONS

| NO. | DATE | BY | BRIEF DESCRIPTION |
|---|---|---|---|
| | | | |

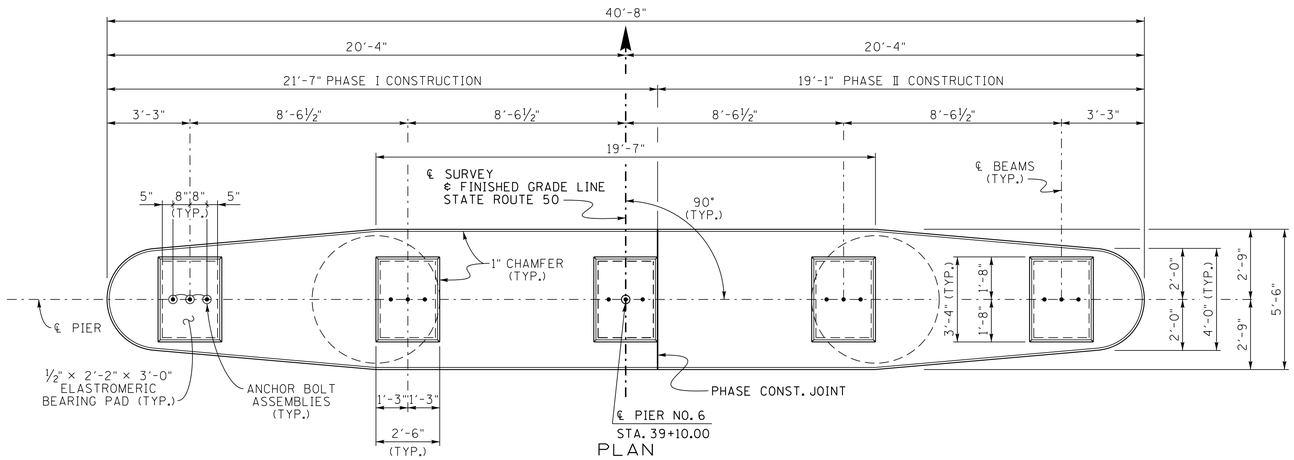


PLAN

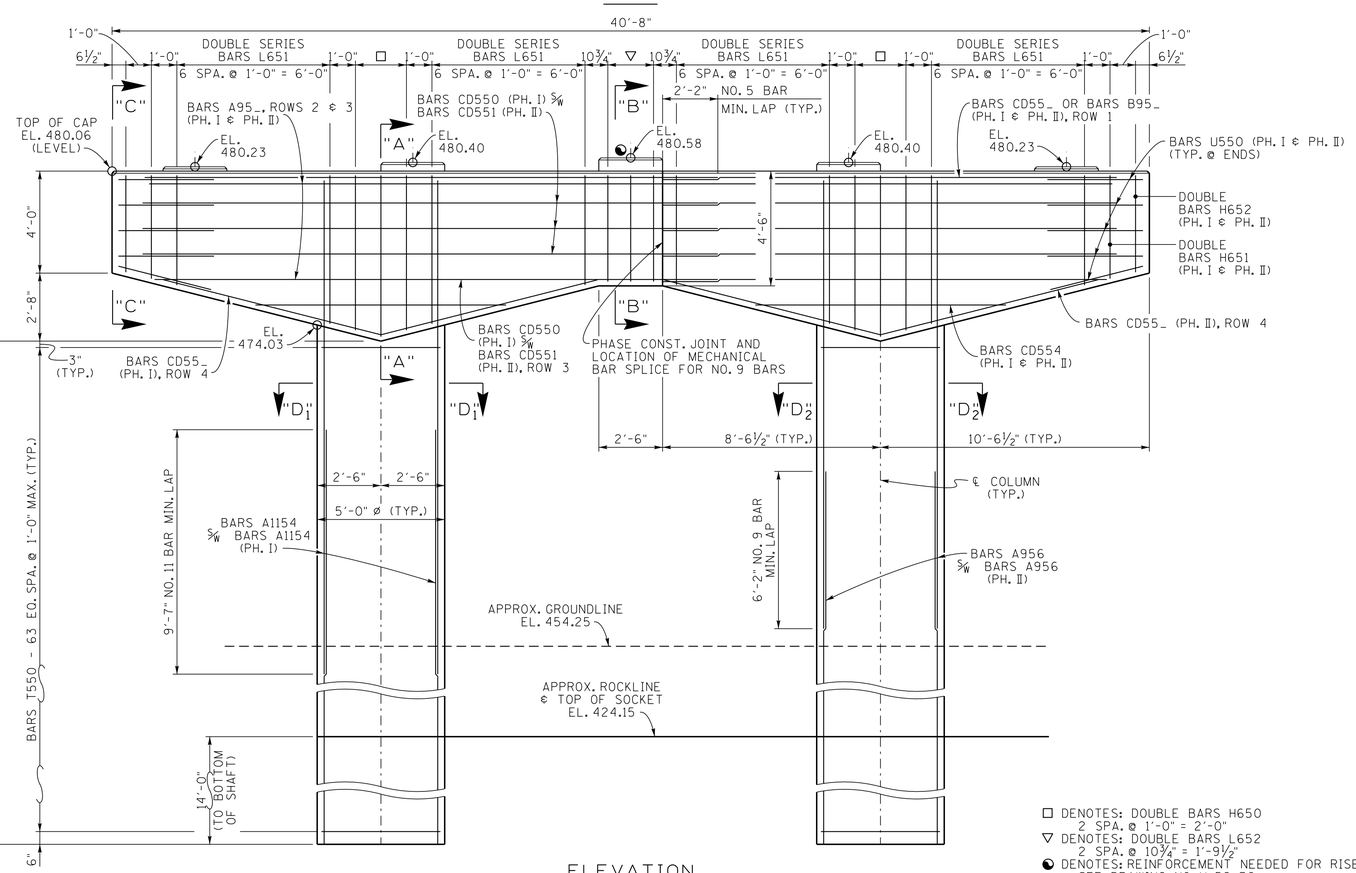


ELEVATION

(LOOKING FORWARD ON SURVEY)

□ DENOTES: DOUBLE BARS H650
2 SPA. @ 1'-0" = 2'-0"
▽ DENOTES: DOUBLE BARS L652
2 SPA. @ 10¾" = 1'-9½"
◐ DENOTES: REINFORCEMENT NEEDED FOR RISER SEE DRAWING NO. U-52-36

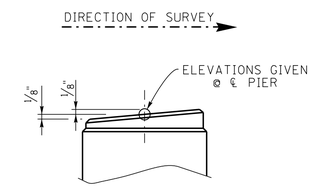


RISER BLOCK SLOPE DETAIL

(TYP. @ EACH RISER)

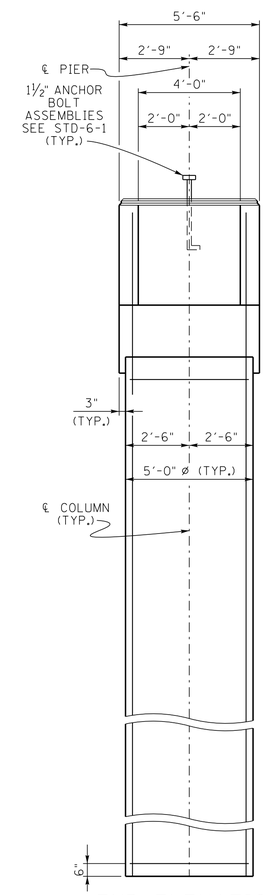


END ELEVATION

NOTE: WHEN POURING CAP BEAM, PROVISIONS SHALL BE MADE FOR SETTING ANCHOR BOLTS. SEE STANDARD DRAWING STD-6-1. BOLT PROJECTION 11". SEE NOTE ON DRAWING NO. U-52-12.

NOTE: RISER BLOCKS TO BE POURED MONOLITHICALLY WITH CAP BEAM.

NOTE: ELASTOMERIC PADS SHALL BE IN PLACE A MINIMUM OF ONE DAY BEFORE BEING DISTURBED BY SETTING BEAMS. PLACE RUBBER BONDING CEMENT IN SUCH A WAY THAT VISIBLE CONCRETE SURFACES WILL NOT BE STAINED.

NOTE: RISER BLOCK BEARING SURFACE TO CONFORM TO BOTTOM OF BEAM GRADE.

NOTE: COLUMN STEEL TO EXTEND 5'-8" MIN. INTO CAP BEAM IN PHASE I CONST. AND 3'-8" MIN. INTO CAP BEAM IN PHASE II CONST.

ESTIMATED QUANTITIES

| CLASS "A" CONCRETE (BRIDGES) C.Y. | STEEL BAR REINFORCEMENT (BRIDGES) LBS. | CLASS "S" DRILLED SHAFT CONCRETE C.Y. |
|---|---|---|
| 69 | 27,175 | 64 |

STATE OF TENNESSEE
DEPARTMENT OF TRANSPORTATION

PIER NO. 6
ALTERNATE "B"
STATE ROUTE 50
OVER
DUCK RIVER
STATION 37+10.00
LOG MILE 14.04
HICKMAN COUNTY
2014

HARDIE M. BROOKS, JR. STATE OF TENNESSEE

CORRECT Wayne J. Tapp
ENGINEER OF STRUCTURES

DESIGNED BY ERIC SLAYTON DATE 08-11
DRAWN BY T. WISEMAN DATE 08-11
SUPERVISED BY MBC / HMB DATE 08-11
CHECKED BY ERIC SLAYTON DATE --11

U-52-33

PER1008ALTB.DGN

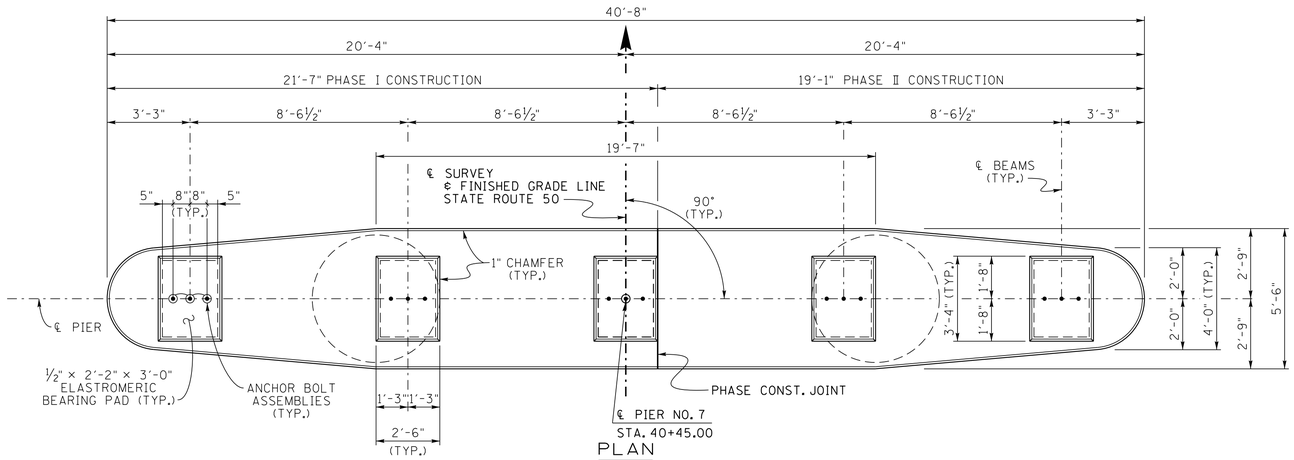


PLAN

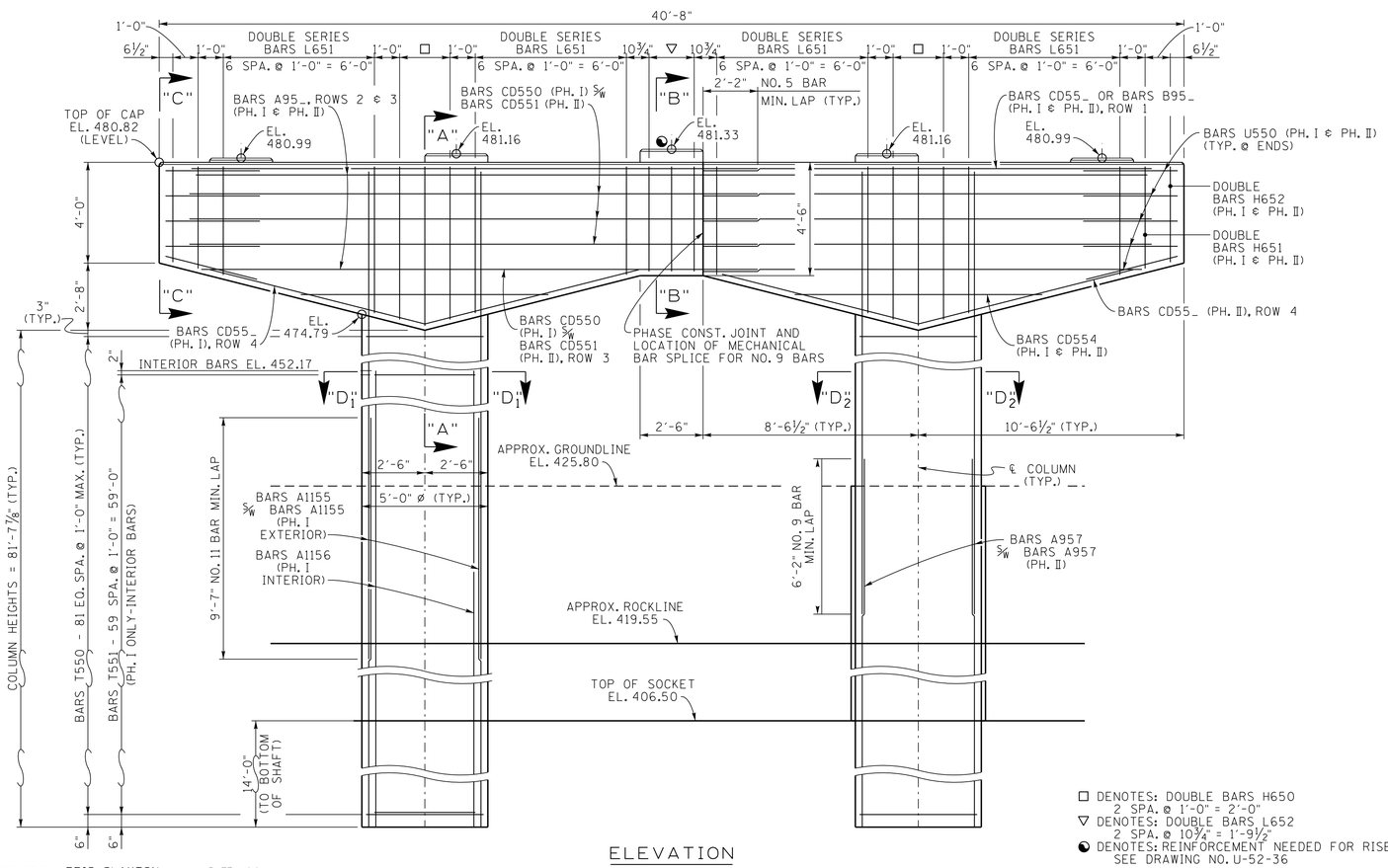


ELEVATION

(LOOKING FORWARD ON SURVEY)

□ DENOTES: DOUBLE BARS H650
2 SPA. @ 1'-0" = 2'-0"
▽ DENOTES: DOUBLE BARS L652
2 SPA. @ 10¾" = 1'-9½"
◐ DENOTES: REINFORCEMENT NEEDED FOR RISER SEE DRAWING NO. U-52-36

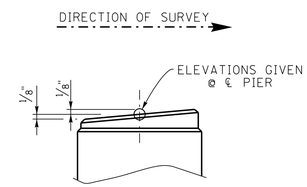


RISER BLOCK SLOPE DETAIL

(TYP. @ EACH RISER)

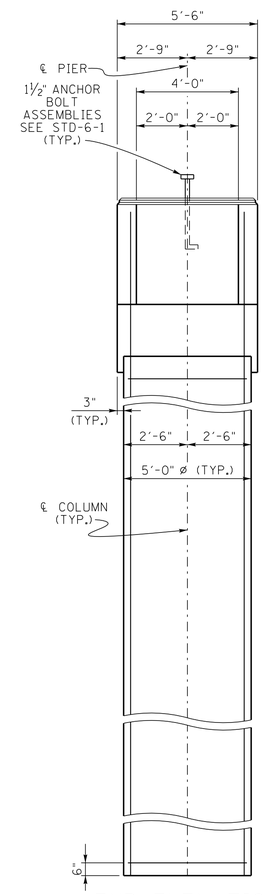


END ELEVATION

PIN 105351.00
CONST. NO. 41056-3217-94

| PROJECT NO. | YEAR | SHEET NO. |
|---|---|---|
| BR-STP-50(29) | 2014 | |

REVISIONS

| NO. | DATE | BY | BRIEF DESCRIPTION |
|---|---|---|---|
| | | | |

NOTE: WHEN POURING CAP BEAM, PROVISIONS SHALL BE MADE FOR SETTING ANCHOR BOLTS. SEE STANDARD DRAWING STD-6-1. BOLT PROJECTION 11". SEE NOTE ON DRAWING NO. U-52-12.

NOTE: RISER BLOCKS TO BE POURED MONOLITHICALLY WITH CAP BEAM.

NOTE: ELASTOMERIC PADS SHALL BE IN PLACE A MINIMUM OF ONE DAY BEFORE BEING DISTURBED BY SETTING BEAMS. PLACE RUBBER BONDING CEMENT IN SUCH A WAY THAT VISIBLE CONCRETE SURFACES WILL NOT BE STAINED.

NOTE: RISER BLOCK BEARING SURFACE TO CONFORM TO BOTTOM OF BEAM GRADE.

NOTE: COLUMN STEEL TO EXTEND 5'-8" MIN. INTO CAP BEAM IN PHASE I CONST. AND 3'-8" MIN. INTO CAP BEAM IN PHASE II CONST.

ESTIMATED QUANTITIES

| CLASS "A" CONCRETE (BRIDGES) C.Y. | STEEL BAR REINFORCEMENT (BRIDGES) LBS. | CLASS "S" DRILLED SHAFT CONCRETE C.Y. |
|---|---|---|
| 95 | 43,815 | 65 |

STATE OF TENNESSEE
DEPARTMENT OF TRANSPORTATION

PIER NO. 7
ALTERNATE "B"
STATE ROUTE 50
OVER
DUCK RIVER
STATION 37+10.00
LOG MILE 14.04
HICKMAN COUNTY
2014

HARDIE M. BROOKS, JR. STATE OF TENNESSEE

CORRECT Wayne A. Sager
ENGINEER OF STRUCTURES

| | | | |
|---|---|---|---|
| DESIGNED BY | ERIC SLAYTON | DATE | 08-11 |
| DRAWN BY | T. WISEMAN | DATE | 08-11 |
| SUPERVISED BY | MBC / HMB | DATE | 08-11 |
| CHECKED BY | ERIC SLAYTON | DATE | --- -11 |

U-52-34

PER1008ALTB.DGN

PIN 105351.00
CONST. NO. 41056-3217-94

| PROJECT NO. | YEAR | SHEET NO. |
|---|---|---|
| BR-STP-50(29) | 2014 | |

REVISIONS

| NO. | DATE | BY | BRIEF DESCRIPTION |
|---|---|---|---|
| | | | |

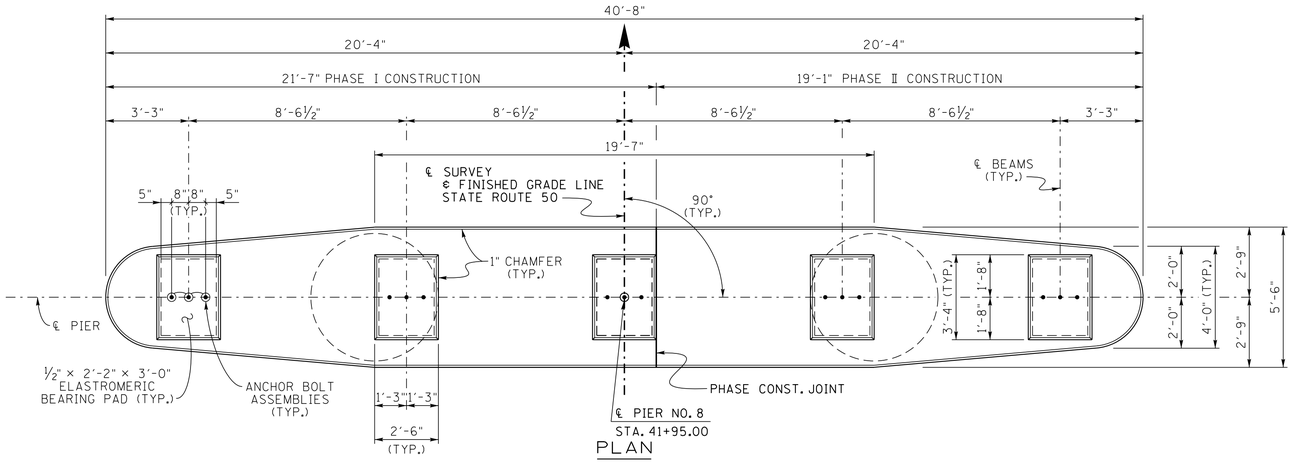


PLAN

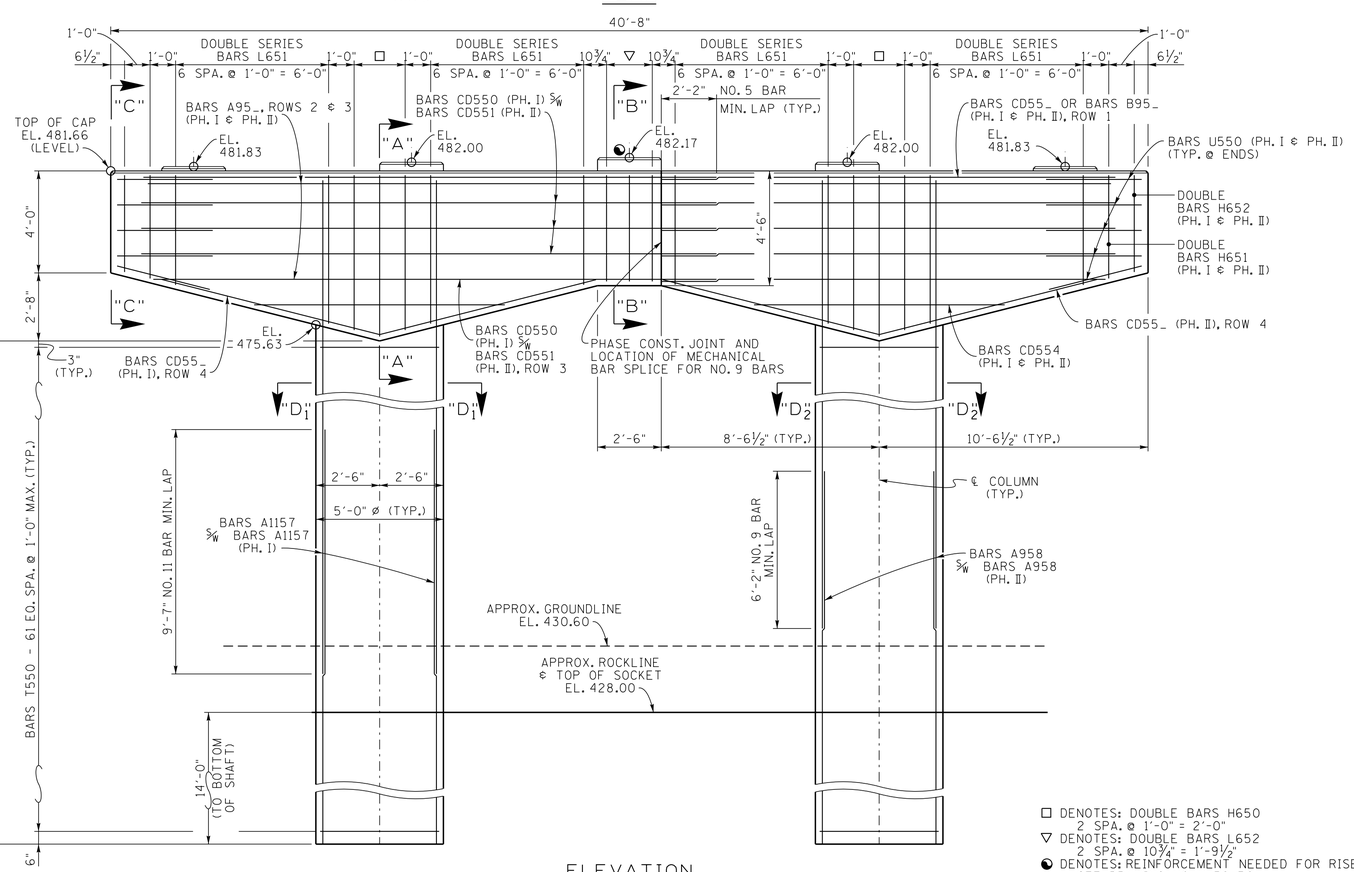


ELEVATION

(LOOKING FORWARD ON SURVEY)

□ DENOTES: DOUBLE BARS H650
2 SPA. @ 1'-0" = 2'-0"
▽ DENOTES: DOUBLE BARS L652
2 SPA. @ 10¾" = 1'-9½"
◐ DENOTES: REINFORCEMENT NEEDED FOR RISER SEE DRAWING NO. U-52-36

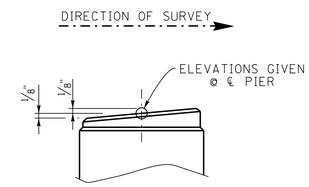


RISER BLOCK SLOPE DETAIL

(TYP. @ EACH RISER)

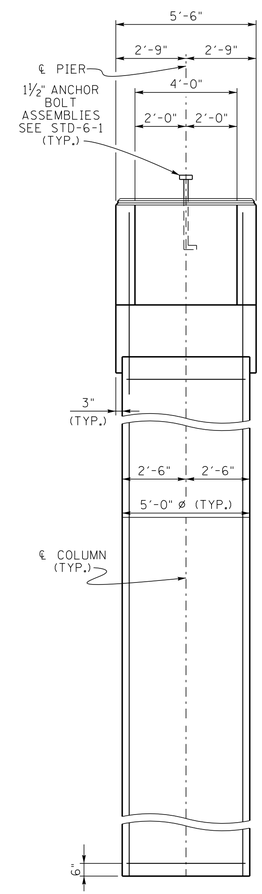


END ELEVATION

NOTE: WHEN POURING CAP BEAM, PROVISIONS SHALL BE MADE FOR SETTING ANCHOR BOLTS. SEE STANDARD DRAWING STD-6-1. BOLT PROJECTION 11". SEE NOTE ON DRAWING NO. U-52-12.

NOTE: RISER BLOCKS TO BE POURED MONOLITHICALLY WITH CAP BEAM.

NOTE: ELASTOMERIC PADS SHALL BE IN PLACE A MINIMUM OF ONE DAY BEFORE BEING DISTURBED BY SETTING BEAMS. PLACE RUBBER BONDING CEMENT IN SUCH A WAY THAT VISIBLE CONCRETE SURFACES WILL NOT BE STAINED.

NOTE: RISER BLOCK BEARING SURFACE TO CONFORM TO BOTTOM OF BEAM GRADE.

NOTE: COLUMN STEEL TO EXTEND 5'-8" MIN. INTO CAP BEAM IN PHASE I CONST. AND 3'-8" MIN. INTO CAP BEAM IN PHASE II CONST.

ESTIMATED QUANTITIES

| CLASS "A" CONCRETE (BRIDGES) C.Y. | STEEL BAR REINFORCEMENT (BRIDGES) LBS. | CLASS "S" DRILLED SHAFT CONCRETE C.Y. |
|---|---|---|
| 97 | 26,559 | 33 |

STATE OF TENNESSEE
DEPARTMENT OF TRANSPORTATION

PIER NO. 8
ALTERNATE "B"
STATE ROUTE 50
OVER
DUCK RIVER
STATION 37+10.00
LOG MILE 14.04
HICKMAN COUNTY
2014

HARDIE M. BROOKS, JR. STATE OF TENNESSEE

CORRECT Wayne G. Sieger
ENGINEER OF STRUCTURES

DESIGNED BY ERIC SLAYTON DATE 08-11
DRAWN BY T. WISEMAN DATE 08-11
SUPERVISED BY MBC / HMB DATE 08-11
CHECKED BY ERIC SLAYTON DATE ---11

U-52-35

PER1008ALTB.DGN

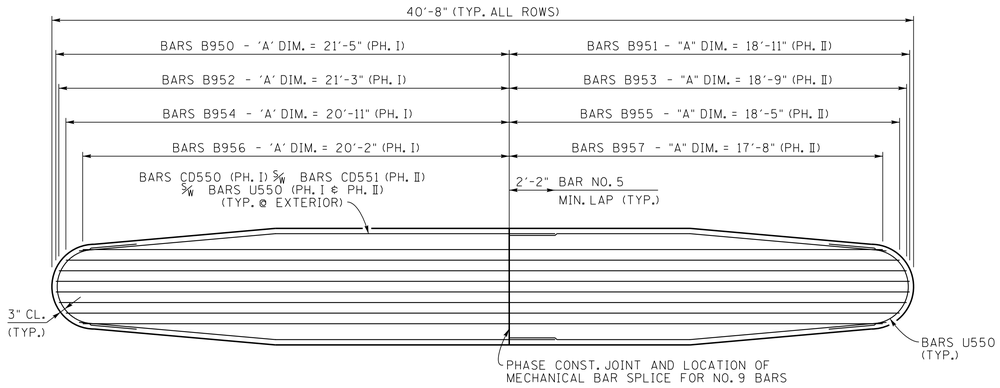


ROW 1

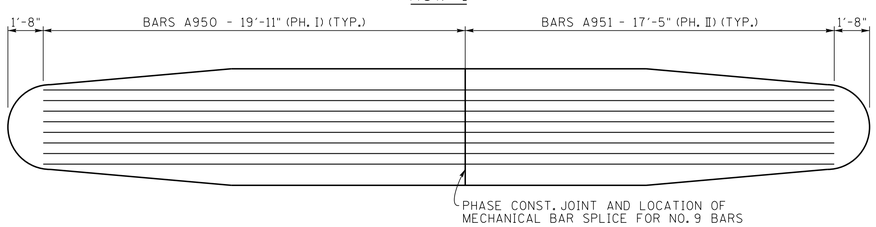


ROWS 2 AND 3

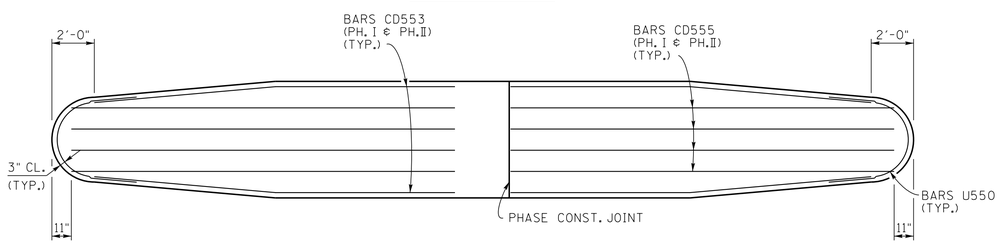


ROW 4

PLAN OF MAIN REINFORCEMENT

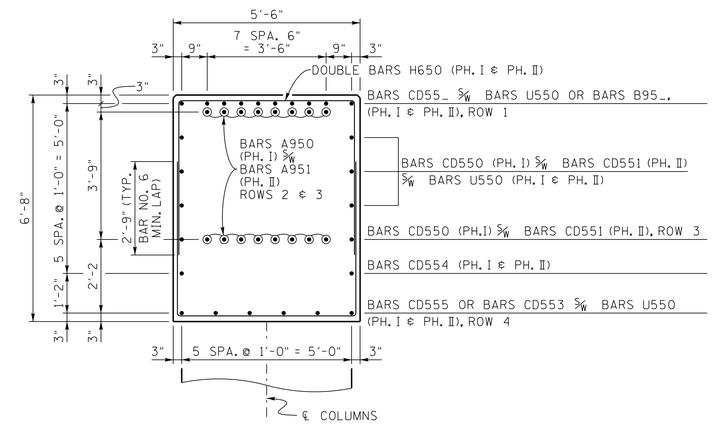


SECTION "A" - "A"

(TYP. ADJ. TO COLUMN)

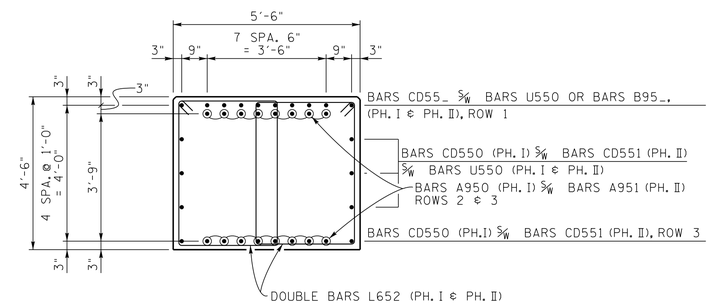


SECTION "B" - "B"

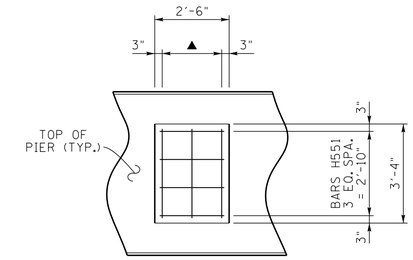


PLAN

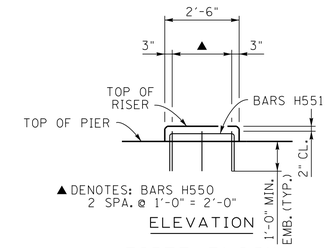


ELEVATION

RISER BLOCK
REINFORCEMENT DETAIL

NOTE: THE CONTRACTOR SHALL OFFSET ANY REINFORCEMENT NECESSARY TO MAINTAIN 2" CLEARANCE TO PHASE CONSTRUCTION JOINT.

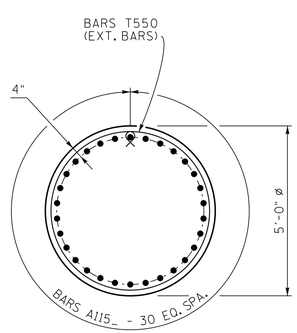


SECTION "D1" - "D1"

(PHASE I CONSTRUCTION)
(PIERS NO. 1 THRU 6 & 8)

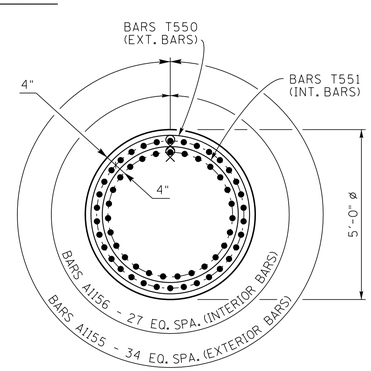


SECTION "D1" - "D1"

(PHASE I CONSTRUCTION)
(PIER NO. 7 ONLY)

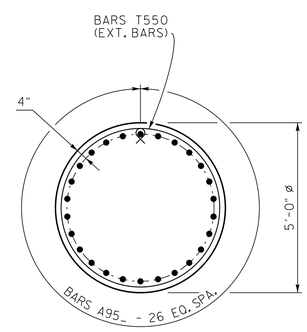


SECTION "D2" - "D2"

(PHASE II CONSTRUCTION)

| | | | |
|---|---|---|---|
| DESIGNED BY | ERIC SLAYTON | DATE | 08-11 |
| DRAWN BY | T. WISEMAN | DATE | 08-11 |
| SUPERVISED BY | MBC / HMB | DATE | 08-11 |
| CHECKED BY | ERIC SLAYTON | DATE | --11 |

PIN 105351.00
CONST. NO. 41056-3217-94

| PROJECT NO. | YEAR | SHEET NO. |
|---|---|---|
| BR-STP-50(29) | 2014 | |

REVISIONS

| NO. | DATE | BY | BRIEF DESCRIPTION |
|---|---|---|---|
| | | | |

STATE OF TENNESSEE
DEPARTMENT OF TRANSPORTATION

PIERS NO. 1 THRU NO. 8 DETAILS
ALTERNATE "B"
STATE ROUTE 50
OVER
DUCK RIVER
STATION 37+10.00
LOG MILE 14.04
HICKMAN COUNTY
2014

HARDIE M. BROOKS, JR. STATE OF TENNESSEE

CORRECT Wayne J. Sigler
ENGINEER OF STRUCTURES

U-52-36

FFD1008A.DGN

PIN: 105351.00
CONST. NO. 41056-3217-94

| PROJECT NO. | YEAR | SHEET NO. |
|---|---|---|
| BR-STP-50(29) | 2014 | |

REVISIONS

| NO. | DATE | BY | BRIEF DESCRIPTION |
|---|---|---|---|
| | | | |

## TABLE OF PILE DATA AT FOOTINGS

| | | 1 | 2 | 3 | 4 | 5 | 6 | 7 | 8 | 9 | 10 | 11 | 12 | 13 | 14 | 15 | 16 | 17 | 18 | 19 | 20 | 21 | 22 | 23 | 24 |
|---|---|---|---|---|---|---|---|---|---|---|---|---|---|---|---|---|---|---|---|---|---|---|---|---|---|
| PIER NO. 2 FOOTING "A" | PILE CUT-OFF ELEVATION | | | | | | | | | | | | | | | | | | | | | | | | |
| | PILE TIP ELEVATION | | | | | | | | | | | | | | | | | | | | | | | | |
| | IN PLACE PILE LENGTH | | | | | | | | | | | | | | | | | | | | | | | | |
| PIER NO. 2 FOOTING "B" | PILE CUT-OFF ELEVATION | | | | | | | | | | | | | | | | | | | | | | | | |
| | PILE TIP ELEVATION | | | | | | | | | | | | | | | | | | | | | | | | |
| | IN PLACE PILE LENGTH | | | | | | | | | | | | | | | | | | | | | | | | |
| PIER NO. 3 FOOTING "A" | PILE CUT-OFF ELEVATION | | | | | | | | | | | | | | | | | | | | | | | | |
| | PILE TIP ELEVATION | | | | | | | | | | | | | | | | | | | | | | | | |
| | IN PLACE PILE LENGTH | | | | | | | | | | | | | | | | | | | | | | | | |
| PIER NO. 3 FOOTING "B" | PILE CUT-OFF ELEVATION | | | | | | | | | | | | | | | | | | | | | | | | |
| | PILE TIP ELEVATION | | | | | | | | | | | | | | | | | | | | | | | | |
| | IN PLACE PILE LENGTH | | | | | | | | | | | | | | | | | | | | | | | | |
| PIER NO. 4 FOOTING "A" | PILE CUT-OFF ELEVATION | | | | | | | | | | | | | | | | | | | | | | | | |
| | PILE TIP ELEVATION | | | | | | | | | | | | | | | | | | | | | | | | |
| | IN PLACE PILE LENGTH | | | | | | | | | | | | | | | | | | | | | | | | |
| PIER NO. 4 FOOTING "B" | PILE CUT-OFF ELEVATION | | | | | | | | | | | | | | | | | | | | | | | | |
| | PILE TIP ELEVATION | | | | | | | | | | | | | | | | | | | | | | | | |
| | IN PLACE PILE LENGTH | | | | | | | | | | | | | | | | | | | | | | | | |

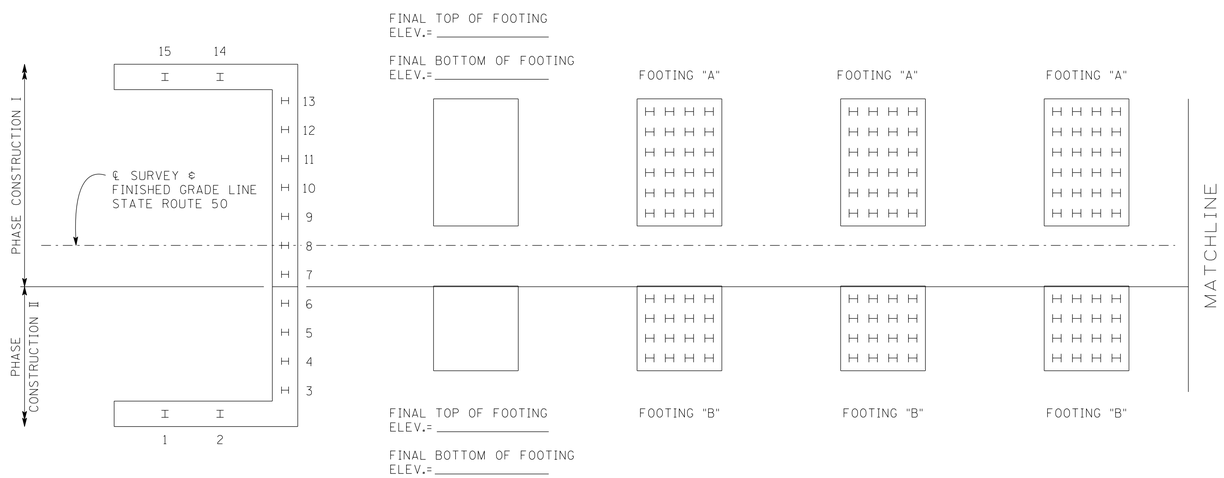


PLAN

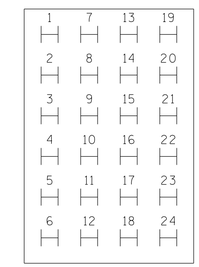


TYP. FOOTING "A" (PHASE I)

DIRECTION OF SURVEY

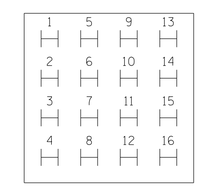


TYP. FOOTING "B" (PHASE II)

FOOTING DETAILS

## ABUTMENT PILE DATA TABLE

| | | 1 | 2 | 3 | 4 | 5 | 6 | 7 | 8 | 9 | 10 | 11 | 12 | 13 | 14 | 15 |
|---|---|---|---|---|---|---|---|---|---|---|---|---|---|---|---|---|
| ABUTMENT NO. 1 | PILE CUT-OFF ELEVATION | | | | | | | | | | | | | | | |
| | PILE TIP ELEVATION | | | | | | | | | | | | | | | |
| | IN PLACE PILE LENGTH | | | | | | | | | | | | | | | |

NOTE TO CONTRACTOR AND CONSTRUCTION OFFICE:
THE BLANKS ON THIS SHEET ARE TO BE FILLED IN BY THE CONSTRUCTION OFFICE AND/OR FIELD ENGINEER GIVING AS BUILT CONDITIONS. AFTER COMPLETION, IT IS TO BE SENT TO THE DIVISION OF STRUCTURES TO BECOME PART OF FINAL BRIDGE DOCUMENTS.

STATE OF TENNESSEE
DEPARTMENT OF TRANSPORTATION

FINAL FOUNDATION DATA
ALTERNATE "A"
STATE ROUTE 50
OVER
DUCK RIVER
STATION 37+10.00
LOG MILE 14.04
HICKMAN COUNTY
2014

CORRECT Wayne G. Sieper
ENGINEER OF STRUCTURES

DESIGNED BY E. SLAYTON DATE 03-10
DRAWN BY DIANE BUSH DATE 08-11
SUPERVISED BY MBC / HMB DATE 08-11
CHECKED BY ES DATE 02-14

U-52-37

FFD1008A.DGN

PIN: 105351.00
CONST. NO. 41056-3217-94

| PROJECT NO. | YEAR | SHEET NO. |
|---|---|---|
| BR-STP-50(29) | 2014 | |

REVISIONS

| NO. | DATE | BY | BRIEF DESCRIPTION |
|---|---|---|---|
| | | | |

## TABLE OF PILE DATA AT FOOTINGS

| | | 1 | 2 | 3 | 4 | 5 | 6 | 7 | 8 | 9 | 10 | 11 | 12 | 13 | 14 | 15 | 16 | 17 | 18 | 19 | 20 | 21 | 22 | 23 | 24 |
|---|---|---|---|---|---|---|---|---|---|---|---|---|---|---|---|---|---|---|---|---|---|---|---|---|---|
| PIER NO. 5 FOOTING "A" | PILE CUT-OFF ELEVATION | | | | | | | | | | | | | | | | | | | | | | | | |
| | PILE TIP ELEVATION | | | | | | | | | | | | | | | | | | | | | | | | |
| | IN PLACE PILE LENGTH | | | | | | | | | | | | | | | | | | | | | | | | |
| PIER NO. 5 FOOTING "B" | PILE CUT-OFF ELEVATION | | | | | | | | | | | | | | | | | | | | | | | | |
| | PILE TIP ELEVATION | | | | | | | | | | | | | | | | | | | | | | | | |
| | IN PLACE PILE LENGTH | | | | | | | | | | | | | | | | | | | | | | | | |
| PIER NO. 6 FOOTING "A" | PILE CUT-OFF ELEVATION | | | | | | | | | | | | | | | | | | | | | | | | |
| | PILE TIP ELEVATION | | | | | | | | | | | | | | | | | | | | | | | | |
| | IN PLACE PILE LENGTH | | | | | | | | | | | | | | | | | | | | | | | | |
| PIER NO. 6 FOOTING "B" | PILE CUT-OFF ELEVATION | | | | | | | | | | | | | | | | | | | | | | | | |
| | PILE TIP ELEVATION | | | | | | | | | | | | | | | | | | | | | | | | |
| | IN PLACE PILE LENGTH | | | | | | | | | | | | | | | | | | | | | | | | |

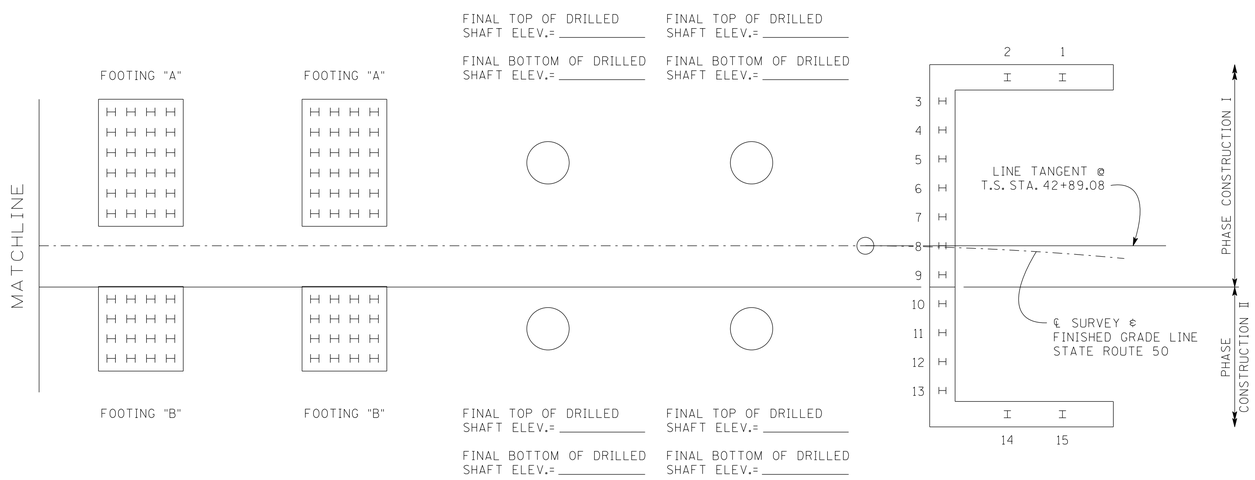


PLAN

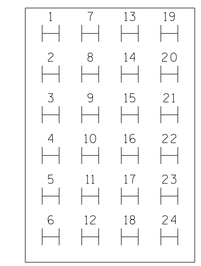


TYP. FOOTING "A" (PHASE I)

DIRECTION OF SURVEY

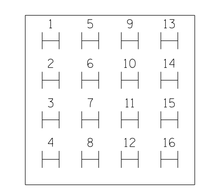


TYP. FOOTING "B" (PHASE II)

FOOTING DETAILS

## ABUTMENT PILE DATA TABLE

| | | 1 | 2 | 3 | 4 | 5 | 6 | 7 | 8 | 9 | 10 | 11 | 12 | 13 | 14 | 15 |
|---|---|---|---|---|---|---|---|---|---|---|---|---|---|---|---|---|
| ABUTMENT NO. 2 | PILE CUT-OFF ELEVATION | | | | | | | | | | | | | | | |
| | PILE TIP ELEVATION | | | | | | | | | | | | | | | |
| | IN PLACE PILE LENGTH | | | | | | | | | | | | | | | |

NOTE TO CONTRACTOR AND CONSTRUCTION OFFICE:
THE BLANKS ON THIS SHEET ARE TO BE FILLED IN BY THE CONSTRUCTION OFFICE AND/OR FIELD ENGINEER GIVING AS BUILT CONDITIONS. AFTER COMPLETION, IT IS TO BE SENT TO THE DIVISION OF STRUCTURES TO BECOME PART OF FINAL BRIDGE DOCUMENTS.

STATE OF TENNESSEE
DEPARTMENT OF TRANSPORTATION

FINAL FOUNDATION DATA
ALTERNATE "A"
STATE ROUTE 50
OVER
DUCK RIVER
STATION 37+10.00
LOG MILE 14.04
HICKMAN COUNTY
2014

CORRECT Wayne G. Sieger
ENGINEER OF STRUCTURES

U-52-38

DESIGNED BY E. SLAYTON DATE 03-10
DRAWN BY DIANE BUSH DATE 08-11
SUPERVISED BY MBC / HMB DATE 08-11
CHECKED BY ES DATE 02-14

Transportation Information Technology Services

FFD1008ALTB.DGN

PIN: 105351.00
CONST. NO. 41056-3217-94

| PROJECT NO. | YEAR | SHEET NO. |
|---|---|---|
| BR-STP-50(29) | 2014 | |

REVISIONS

| NO. | DATE | BY | BRIEF DESCRIPTION |
|---|---|---|---|
| | | | |

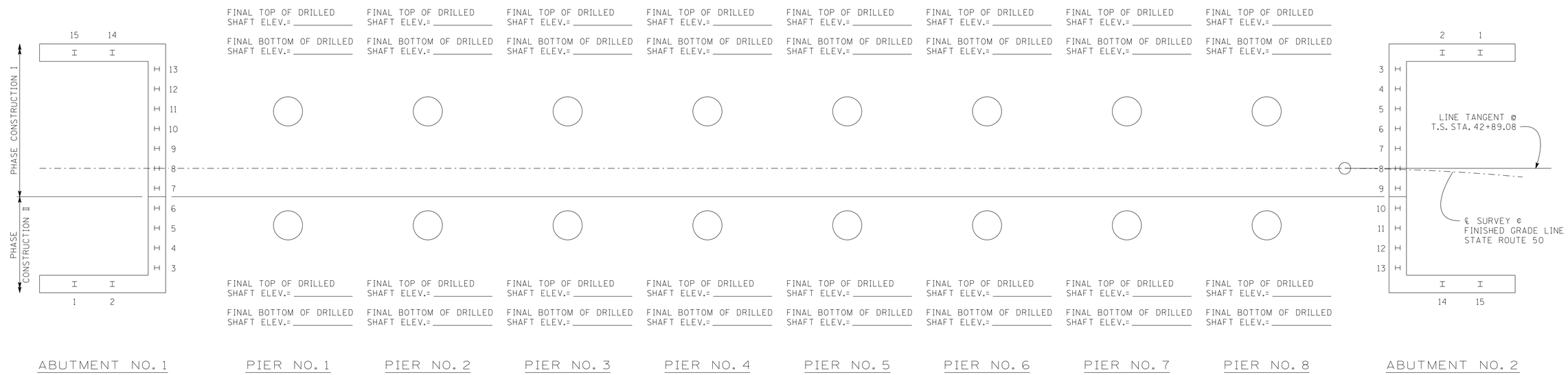


PLAN

ABUTMENT PILE DATA TABLE

| | | 1 | 2 | 3 | 4 | 5 | 6 | 7 | 8 | 9 | 10 | 11 | 12 | 13 | 14 | 15 |
|---|---|---|---|---|---|---|---|---|---|---|---|---|---|---|---|---|
| ABUTMENT NO. 1 | PILE CUT-OFF ELEVATION | | | | | | | | | | | | | | | |
| | PILE TIP ELEVATION | | | | | | | | | | | | | | | |
| | IN PLACE PILE LENGTH | | | | | | | | | | | | | | | |
| ABUTMENT NO. 2 | PILE CUT-OFF ELEVATION | | | | | | | | | | | | | | | |
| | PILE TIP ELEVATION | | | | | | | | | | | | | | | |
| | IN PLACE PILE LENGTH | | | | | | | | | | | | | | | |

NOTE TO CONTRACTOR AND CONSTRUCTION OFFICE:
THE BLANKS ON THIS SHEET ARE TO BE FILLED IN BY THE CONSTRUCTION OFFICE AND/OR FIELD ENGINEER GIVING AS BUILT CONDITIONS. AFTER COMPLETION, IT IS TO BE SENT TO THE DIVISION OF STRUCTURES TO BECOME PART OF FINAL BRIDGE DOCUMENTS.

STATE OF TENNESSEE
DEPARTMENT OF TRANSPORTATION

FINAL FOUNDATION DATA
ALTERNATE "B"
STATE ROUTE 50
OVER
DUCK RIVER
STATION 37+10.00
LOG MILE 14.04
HICKMAN COUNTY
2014

CORRECT Wayne G. Sieger
ENGINEER OF STRUCTURES

U-52-39

| | | | |
|---|---|---|---|
| DESIGNED BY | E. SLAYTON | DATE | 03-10 |
| DRAWN BY | DIANE BUSH | DATE | 08-11 |
| SUPERVISED BY | MBC / HMB | DATE | 08-11 |
| CHECKED BY | ES | DATE | 02-14 |

dgnspecs

BOS1008.DGN

# BILL OF STEEL

## SUPERSTRUCTURE

| BAR | LOCATION | SIZE | NO. REQ'D | BENDING DIMENSIONS A | B | C | D | LENGTH |
|---|---|---|---|---|---|---|---|---|
| A507 | DIAPHRAGM | 5 | 112 | | | | | 21'-5" |
| A508 | DIAPHRAGM | 5 | 112 | | | | | 16'-9" |
| L400 | DIAPHRAGM | 4 | 80 | 1'-2" | 1'-2" | | | 5'-5" |
| L401 | DIAPHRAGM | 4 | 224 | 1'-2" | 5'-10" | | | 14'-9" |

## SUPERSTRUCTURE (EPOXY)

| BAR | LOCATION | SIZE | NO. REQ'D | BENDING DIMENSIONS A | B | C | D | LENGTH |
|---|---|---|---|---|---|---|---|---|
| A500E | SLAB | 5 | 680 | | | | | 60'-0" |
| A501E | SLAB | 5 | 34 | | | | | 47'-1" |
| A502E | SLAB | 5 | 3,368 | | | | | 27'-11" |
| A503E | SLAB | 5 | 3,368 | | | | | 15'-7" |
| A504E | SLAB | 5 | 82 | | | | | 29'-3" |
| A505E | SLAB | 5 | 84 | | | | | 42'-9" |
| A506E | SLAB | 5 | 42 | | | | | 42'-4" |
| A600E | SLAB | 6 | 166 | | | | | 41'-0" |
| A601E | SLAB | 6 | 166 | | | | | 45'-8" |
| A602E | SLAB | 6 | 332 | | | | | 59'-1" |
| A800E | SLAB | 8 | 996 | | | | | 28'-9" |
| A801E | SLAB | 8 | 166 | | | | | 39'-7" |
| A802E | SLAB | 8 | 166 | | | | | 45'-2" |
| A900E | SLAB | 9 | 664 | | | | | 35'-3" |
| B570E | PARAPET | 5 | 7,176 | 2'-8" | | | | 3'-3" |

## ABUTMENT NOS.1 & 2 (EACH)

| BAR | LOCATION | SIZE | NO. REQ'D | BENDING DIMENSIONS A | B | C | D | LENGTH |
|---|---|---|---|---|---|---|---|---|
| A440 | ROADWAY BRACKET (PH. 1) | 4 | 1 | | | | | 25'-8" |
| A441 | ROADWAY BRACKET (PH. 2) | 4 | 1 | | | | | 13'-11" |
| A442 | WINGWALLS | 4 | 38 | | | | | 6'-8" |
| A443 | WINGWALL | 4 | 16 | | | | | 19'-10" |
| A540 | ABUTMENT BEAM (PH. 1) | 5 | 2 | | | | | 28'-5" |
| A541 | ABUTMENT BEAM (PH. 2) | 5 | 2 | | | | | 16'-2" |
| A542 | WING BEAMS | 5 | 4 | | | | | 21'-4" |
| A640 | ENDWALL (PH. 1) | 6 | 14 | | | | | 28'-3" |
| A641 | ENDWALL (PH. 2) | 6 | 14 | | | | | 15'-5" |
| A642 | WINGWALLS | 6 | 38 | | | | | 6'-8" |
| A643 | WINGWALLS | 6 | 16 | | | | | 19'-10" |
| A644 | ENDWALL | 6 | 8 | | | | | 4'-0" |
| A740 | ABUTMENT BEAM (PH. 1) | 7 | 10 | | | | | 30'-0" |
| A741 | ABUTMENT BEAM (PH. 2) | 7 | 10 | | | | | 16'-2" |
| A742 | WING BEAMS | 7 | 20 | | | | | 21'-4" |
| B640 | ENDWALL | 6 | 14 | 5'-0" | | | | 5'-8" |
| H440 | RISER BLOCK | 4 | 3 | 1'-1" | 1'-4" | | | 3'-9" |
| H441 | RISER BLOCK | 4 | 2 | 2'-2" | 1'-4" | | | 4'-10" |
| H540 | ROADWAY BRACKET/ENDWALL | 5 | 38 | 2'-2" | 6" | | | 3'-2" |
| H640 | ABUTMENT BEAM/WINGBEAMS | 6 | 76 | 1'-2" | 4'-0" | | | 9'-2" |
| L540 | ABUTMENT BEAM/WINGBEAMS | 5 | 74 | 2'-8" | 2'-8" | | | 11'-8" |
| TB440 | PILES | 4 | 15 | 2'-0" | 1'-6" | 3 1/2" | | 40'-3" |

## ABUTMENT NOS. 1 & 2 (EPOXY) (EACH)

| BAR | LOCATION | SIZE | NO. REQ'D | BENDING DIMENSIONS A | B | C | D | LENGTH |
|---|---|---|---|---|---|---|---|---|
| A640E | ENDWALL (PH. 1) | 6 | 2 | | | | | 28'-3" |
| A641E | ENDWALL (PH. 2) | 6 | 2 | | | | | 15'-5" |
| A642E | ENDWALL | 6 | 84 | | | | | 6'-8" |
| B570E | WINGWALLS/PARAPET | 5 | 80 | 2'-8" | | | | 3'-3" |
| F640E | ENDWALL/PABE | 6 | 38 | 1'-1" | 1'-3" | 1'-1" | 1'-3" | 4'-0" |
| HP570E | WINGWALLS/PARAPET | 5 | 16 | 4" | 3'-10" | 1'-1" | | 8'-1" |
| R640E | ENDWALL/SLAB | 6 | 38 | 2'-0" | 2'-0" | | | 4'-0" |

| BAR | LOCATION | SIZE | NO. REQ'D | BENDING DIMENSIONS A | B | C | D | LENGTH |
|---|---|---|---|---|---|---|---|---|

| BAR | LOCATION | SIZE | NO. REQ'D | BENDING DIMENSIONS A | B | C | D | LENGTH |
|---|---|---|---|---|---|---|---|---|

PIN: 105351.00
CONST. NO. 41056-3217-94

| PROJECT NO. | YEAR | SHEET NO. |
|---|---|---|
| BR-STP-50(29) | 2014 | |

REVISIONS

| NO. | DATE | BY | BRIEF DESCRIPTION |
|---|---|---|---|

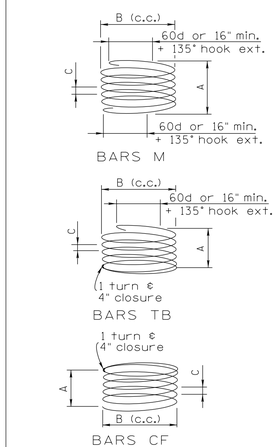


## REINFORCING STEEL CODE

| TYPE | SIZE | SERIES |
|---|---|---|
| A | 5 | 06 |

NOTE: DIMENSIONS SHOWN ON THIS SHEET ARE OUTSIDE TO OUTSIDE OF BAR. STANDARD C.R.S.I. HOOK DETAILS SHALL APPLY, EXCEPT AS NOTED.

NOTE: THE SUFFIX E FOR BARS SO MARKED DENOTES EPOXY COATED REINFORCEMENT.

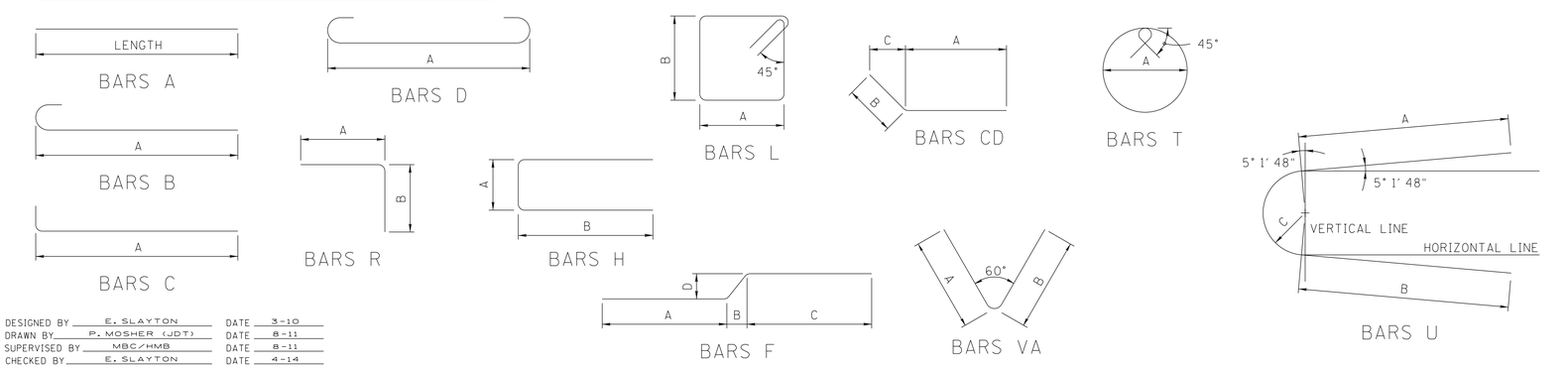


STATE OF TENNESSEE
DEPARTMENT OF TRANSPORTATION

BILL OF STEEL
STATE ROUTE 50
OVER
DUCK RIVER
STATION 37+10.00
LOG MILE 14.04
HICKMAN COUNTY
2014

| | | | |
|---|---|---|---|
| DESIGNED BY | E. SLAYTON | DATE | 3-10 |
| DRAWN BY | P. MOSHER (JDT) | DATE | 8-11 |
| SUPERVISED BY | MBC/HMB | DATE | 8-11 |
| CHECKED BY | E. SLAYTON | DATE | 4-14 |

CORRECT Wayne G. Sieger
ENGINEER OF STRUCTURES

U-52-40

BOS1008.DGN

# BILL OF STEEL

PIN: 105351.00
CONST. NO. 41056-3217-94

| PROJECT NO. | YEAR | SHEET NO. |
|---|---|---|
| BR-STP-50(29) | 2014 | |

REVISIONS

| NO. | DATE | BY | BRIEF DESCRIPTION |
|---|---|---|---|
| | | | |

## PIER NO. 1

| BAR | LOCATION | SIZE | NO. REQ'D | BENDING DIMENSIONS A | B | C | D | LENGTH |
|---|---|---|---|---|---|---|---|---|
| A950 | CAP (PH. 1) | 9 | 16 | | | | | 19'-11" |
| A951 | CAP (PH. 2) | 9 | 16 | | | | | 17'-5" |
| A952 | COLUMN/CAP (PH. 2) | 9 | 26 | | | | | 24'-8" |
| A1150 | COLUMN/CAP (PH. 1) | 11 | 30 | | | | | 25'-11" |
| B950 | CAP (PH. 1) | 9 | 2 | 21'-5" | | | | 22'-8" |
| B951 | CAP (PH. 2) | 9 | 2 | 18'-11" | | | | 20'-2" |
| B952 | CAP (PH. 1) | 9 | 2 | 21'-3" | | | | 22'-6" |
| B953 | CAP (PH. 2) | 9 | 2 | 18'-9" | | | | 20'-0" |
| B954 | CAP (PH. 1) | 9 | 2 | 20'-11" | | | | 22'-2" |
| B955 | CAP (PH. 2) | 9 | 2 | 18'-5" | | | | 19'-8" |
| B956 | CAP (PH. 1) | 9 | 2 | 20'-2" | | | | 21'-5" |
| B957 | CAP (PH. 2) | 9 | 2 | 17'-8" | | | | 18'-11" |
| C950 | FOOTING/COLUMN (PH. 2) | 9 | 26 | 9'-0" | | | | 10'-7" |
| C1150 | FOOTING/COLUMN (PH. 1) | 11 | 30 | 13'-2" | | | | 15'-2" |
| CD550 | CAP (PH. 1) | 5 | 10 | 13'-3" | 8'-9" | 8'-8½" | | 22'-0" |
| CD551 | CAP (PH. 2) | 5 | 10 | 8'-6⅞" | 8'-9" | 8'-8½" | | 17'-4" |
| CD553 | CAP | 5 | 4 | 8'-9" | 8'-10" | 7'-9" | | 17'-7" |
| CD554 | CAP | 5 | 4 | 4'-10⅞" | 4'-11½" | 4'-11⁵⁄₁₆" | | 9'-11" |
| CD555 | CAP | 5 | 8 | 8'-9" | 9'-11" | 9'-7" | | 18'-8" |
| D650 | FOOTINGS | 6 | 73 | 9'-6" | | | | 10'-10" |
| D651 | FOOTING (PH. 1) | 6 | 13 | 14'-6" | | | | 15'-10" |
| D750 | FOOTING (PH. 2) | 7 | 38 | 9'-6" | | | | 11'-2" |
| D950 | FOOTING (PH. 1) | 9 | 23 | 14'-6" | | | | 17'-0" |
| H550 | RISER BLOCK (PH. 1) | 5 | 4 | 3'-0" | 1'-4" | | | 5'-8" |
| H551 | RISER BLOCK (PH. 1) | 5 | 4 | 2'-2" | 1'-4" | | | 4'-10" |
| H650 | CAP | 6 | 12 | 5'-2" | 4'-8" | | | 14'-6" |
| H651 | CAP | 6 | 4 | 3'-7" | 3'-6" | | | 10'-7" |
| H652 | CAP | 6 | 4 | 2'-3" | 3'-3" | | | 8'-9" |
| SERIES | | | | | | | | |
| L651 | CAP | 6 | 8 | ✳ | 2'-11" | | | 121'-4" |
| | | | | ✳ DIM. "A" VARIES FROM 4'-4" TO 5'-10" IN INC. OF 3" (7 BARS) | | | | |
| L652 | CAP | 6 | 6 | 4'-2" | 3'-6" | | | 16'-8" |
| T550 | COLUMNS | 5 | 41 | 4'-6" | | | | 15'-4" |
| U550 | CAP | 5 | 10 | 2'-2" | 2'-2" | 1'-9" | | 9'-10" |

## PIER NO. 2

| BAR | LOCATION | SIZE | NO. REQ'D | BENDING DIMENSIONS A | B | C | D | LENGTH |
|---|---|---|---|---|---|---|---|---|
| A950 | CAP (PH. 1) | 9 | 16 | | | | | 19'-11" |
| A951 | CAP (PH. 2) | 9 | 16 | | | | | 17'-5" |
| A953 | COLUMN/CAP (PH. 2) | 9 | 26 | | | | | 29'-11 |
| A1151 | COLUMN/CAP (PH. 1) | 11 | 30 | | | | | 31'-2" |
| B950 | CAP (PH. 1) | 9 | 2 | 21'-5" | | | | 22'-8" |
| B951 | CAP (PH. 2) | 9 | 2 | 18'-11" | | | | 20'-2" |
| B952 | CAP (PH. 1) | 9 | 2 | 21'-3" | | | | 22'-6" |
| B953 | CAP (PH. 2) | 9 | 2 | 18'-9" | | | | 20'-0" |
| B954 | CAP (PH. 1) | 9 | 2 | 20'-11" | | | | 22'-2" |
| B955 | CAP (PH. 2) | 9 | 2 | 18'-5" | | | | 19'-8" |
| B956 | CAP (PH. 1) | 9 | 2 | 20'-2" | | | | 21'-5" |
| B957 | CAP (PH. 2) | 9 | 2 | 17'-8" | | | | 18'-11" |
| C950 | FOOTING/COLUMN (PH. 2) | 9 | 26 | 9'-0" | | | | 10'-7" |
| C1150 | FOOTING/COLUMN (PH. 1) | 11 | 30 | 13'-2" | | | | 15'-2" |
| CD550 | CAP (PH. 1) | 5 | 10 | 13'-3" | 8'-9" | 8'-8½" | | 22'-0" |
| CD551 | CAP (PH. 2) | 5 | 10 | 8'-6⅞" | 8'-9" | 8'-8½" | | 17'-4" |
| CD553 | CAP | 5 | 4 | 8'-9" | 8'-10" | 7'-9" | | 17'-7" |
| CD554 | CAP | 5 | 4 | 4'-10⅞" | 4'-11½" | 4'-11⁵⁄₁₆" | | 9'-11" |
| CD555 | CAP | 5 | 8 | 8'-9" | 9'-11" | 9'-7" | | 18'-8" |
| D650 | FOOTINGS | 6 | 73 | 9'-6" | | | | 10'-10" |
| D651 | FOOTING (PH. 1) | 6 | 13 | 14'-6" | | | | 15'-10" |
| D750 | FOOTING (PH. 2) | 7 | 38 | 9'-6" | | | | 11'-2" |
| D950 | FOOTING (PH. 1) | 9 | 23 | 14'-6" | | | | 17'-0" |
| H550 | RISER BLOCK (PH. 1) | 5 | 4 | 3'-0" | 1'-4" | | | 5'-8" |
| H551 | RISER BLOCK (PH. 1) | 5 | 4 | 2'-2" | 1'-4" | | | 4'-10" |
| H650 | CAP | 6 | 12 | 5'-2" | 4'-8" | | | 14'-6" |
| H651 | CAP | 6 | 4 | 3'-7" | 3'-6" | | | 10'-7" |
| H652 | CAP | 6 | 4 | 2'-3" | 3'-3" | | | 8'-9" |
| SERIES | | | | | | | | |
| L651 | CAP | 6 | 8 | ✳ | 2'-11" | | | 121'-4" |
| | | | | ✳ DIM. "A" VARIES FROM 4'-4" TO 5'-10" IN INC. OF 3" (7 BARS) | | | | |
| L652 | CAP | 6 | 6 | 4'-2" | 3'-6" | | | 16'-8" |
| T550 | COLUMNS | 5 | 51 | 4'-6" | | | | 15'-4" |
| U550 | CAP | 5 | 10 | 2'-2" | 2'-2" | 1'-9" | | 9'-10" |

## PIER NO. 3

| BAR | LOCATION | SIZE | NO. REQ'D | BENDING DIMENSIONS A | B | C | D | LENGTH |
|---|---|---|---|---|---|---|---|---|
| A950 | CAP (PH. 1) | 9 | 16 | | | | | 19'-11" |
| A951 | CAP (PH. 2) | 9 | 16 | | | | | 17'-5" |
| A954 | COLUMN/CAP (PH. 2) | 9 | 26 | | | | | 30'-8" |
| A1152 | COLUMN/CAP (PH. 1) | 11 | 30 | | | | | 31'-11 |
| B950 | CAP (PH. 1) | 9 | 2 | 21'-5" | | | | 22'-8" |
| B951 | CAP (PH. 2) | 9 | 2 | 18'-11" | | | | 20'-2" |
| B952 | CAP (PH. 1) | 9 | 2 | 21'-3" | | | | 22'-6" |
| B953 | CAP (PH. 2) | 9 | 2 | 18'-9" | | | | 20'-0" |
| B954 | CAP (PH. 1) | 9 | 2 | 20'-11" | | | | 22'-2" |
| B955 | CAP (PH. 2) | 9 | 2 | 18'-5" | | | | 19'-8" |
| B956 | CAP (PH. 1) | 9 | 2 | 20'-2" | | | | 21'-5" |
| B957 | CAP (PH. 2) | 9 | 2 | 17'-8" | | | | 18'-11" |
| C950 | FOOTING/COLUMN (PH. 2) | 9 | 26 | 9'-0" | | | | 10'-7" |
| C1150 | FOOTING/COLUMN (PH. 1) | 11 | 30 | 13'-2" | | | | 15'-2" |
| CD550 | CAP (PH. 1) | 5 | 10 | 13'-3" | 8'-9" | 8'-8½" | | 22'-0" |
| CD551 | CAP (PH. 2) | 5 | 10 | 8'-6⅞" | 8'-9" | 8'-8½" | | 17'-4" |
| CD553 | CAP | 5 | 4 | 8'-9" | 8'-10" | 7'-9" | | 17'-7" |
| CD554 | CAP | 5 | 4 | 4'-10⅞" | 4'-11½" | 4'-11⁵⁄₁₆" | | 9'-11" |
| CD555 | CAP | 5 | 8 | 8'-9" | 9'-11" | 9'-7" | | 18'-8" |
| D650 | FOOTINGS | 6 | 73 | 9'-6" | | | | 10'-10" |
| D651 | FOOTING (PH. 1) | 6 | 13 | 14'-6" | | | | 15'-10" |
| D750 | FOOTING (PH. 2) | 7 | 38 | 9'-6" | | | | 11'-2" |
| D950 | FOOTING (PH. 1) | 9 | 23 | 14'-6" | | | | 17'-0" |
| H550 | RISER BLOCK (PH. 1) | 5 | 4 | 3'-0" | 1'-4" | | | 5'-8" |
| H551 | RISER BLOCK (PH. 1) | 5 | 4 | 2'-2" | 1'-4" | | | 4'-10" |
| H650 | CAP | 6 | 12 | 5'-2" | 4'-8" | | | 14'-6" |
| H651 | CAP | 6 | 4 | 3'-7" | 3'-6" | | | 10'-7" |
| H652 | CAP | 6 | 4 | 2'-3" | 3'-3" | | | 8'-9" |
| SERIES | | | | | | | | |
| L651 | CAP | 6 | 8 | ✳ | 2'-11" | | | 121'-4" |
| | | | | ✳ DIM. "A" VARIES FROM 4'-4" TO 5'-10" IN INC. OF 3" (7 BARS) | | | | |
| L652 | CAP | 6 | 6 | 4'-2" | 3'-6" | | | 16'-8" |
| T550 | COLUMNS | 5 | 53 | 4'-6" | | | | 15'-4" |
| U550 | CAP | 5 | 10 | 2'-2" | 2'-2" | 1'-9" | | 9'-10" |

## PIER NO. 4

| BAR | LOCATION | SIZE | NO. REQ'D | BENDING DIMENSIONS A | B | C | D | LENGTH |
|---|---|---|---|---|---|---|---|---|
| A950 | CAP (PH. 1) | 9 | 16 | | | | | 19'-11" |
| A951 | CAP (PH. 2) | 9 | 16 | | | | | 17'-5" |
| A955 | COLUMN/CAP (PH. 2) | 9 | 26 | | | | | 31'-5" |
| A1153 | COLUMN/CAP (PH. 1) | 11 | 30 | | | | | 32'-8" |
| B950 | CAP (PH. 1) | 9 | 2 | 21'-5" | | | | 22'-8" |
| B951 | CAP (PH. 2) | 9 | 2 | 18'-11" | | | | 20'-2" |
| B952 | CAP (PH. 1) | 9 | 2 | 21'-3" | | | | 22'-6" |
| B953 | CAP (PH. 2) | 9 | 2 | 18'-9" | | | | 20'-0" |
| B954 | CAP (PH. 1) | 9 | 2 | 20'-11" | | | | 22'-2" |
| B955 | CAP (PH. 2) | 9 | 2 | 18'-5" | | | | 19'-8" |
| B956 | CAP (PH. 1) | 9 | 2 | 20'-2" | | | | 21'-5" |
| B957 | CAP (PH. 2) | 9 | 2 | 17'-8" | | | | 18'-11" |
| C950 | FOOTING/COLUMN (PH. 2) | 9 | 26 | 9'-0" | | | | 10'-7" |
| C1150 | FOOTING/COLUMN (PH. 1) | 11 | 30 | 13'-2" | | | | 15'-2" |
| CD550 | CAP (PH. 1) | 5 | 10 | 13'-3" | 8'-9" | 8'-8½" | | 22'-0" |
| CD551 | CAP (PH. 2) | 5 | 10 | 8'-6⅞" | 8'-9" | 8'-8½" | | 17'-4" |
| CD553 | CAP | 5 | 4 | 8'-9" | 8'-10" | 7'-9" | | 17'-7" |
| CD554 | CAP | 5 | 4 | 4'-10⅞" | 4'-11½" | 4'-11⁵⁄₁₆" | | 9'-11" |
| CD555 | CAP | 5 | 8 | 8'-9" | 9'-11" | 9'-7" | | 18'-8" |
| D650 | FOOTINGS | 6 | 73 | 9'-6" | | | | 10'-10" |
| D651 | FOOTING (PH. 1) | 6 | 13 | 14'-6" | | | | 15'-10" |
| D750 | FOOTING (PH. 2) | 7 | 38 | 9'-6" | | | | 11'-2" |
| D950 | FOOTING (PH. 1) | 9 | 23 | 14'-6" | | | | 17'-0" |
| H550 | RISER BLOCK (PH. 1) | 5 | 4 | 3'-0" | 1'-4" | | | 5'-8" |
| H551 | RISER BLOCK (PH. 1) | 5 | 4 | 2'-2" | 1'-4" | | | 4'-10" |
| H650 | CAP | 6 | 12 | 5'-2" | 4'-8" | | | 14'-6" |
| H651 | CAP | 6 | 4 | 3'-7" | 3'-6" | | | 10'-7" |
| H652 | CAP | 6 | 4 | 2'-3" | 3'-3" | | | 8'-9" |
| SERIES | | | | | | | | |
| L651 | CAP | 6 | 8 | ✳ | 2'-11" | | | 121'-4" |
| | | | | ✳ DIM. "A" VARIES FROM 4'-4" TO 5'-10" IN INC. OF 3" (7 BARS) | | | | |
| L652 | CAP | 6 | 6 | 4'-2" | 3'-6" | | | 16'-8" |
| T550 | COLUMNS | 5 | 55 | 4'-6" | | | | 15'-4" |
| U550 | CAP | 5 | 10 | 2'-2" | 2'-2" | 1'-9" | | 9'-10" |

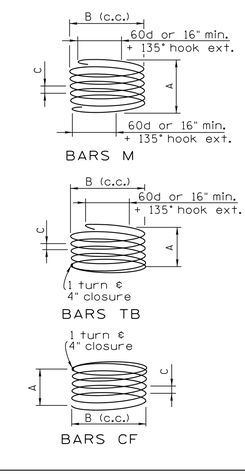


## REINFORCING STEEL CODE

| TYPE | SIZE | SERIES |
|---|---|---|
| A | 5 | 06 |

NOTE: DIMENSIONS SHOWN ON THIS SHEET ARE OUTSIDE TO OUTSIDE OF BAR. STANDARD C.R.S.I. HOOK DETAILS SHALL APPLY, EXCEPT AS NOTED.

NOTE: THE SUFFIX E FOR BARS SO MARKED DENOTES EPOXY COATED REINFORCEMENT.

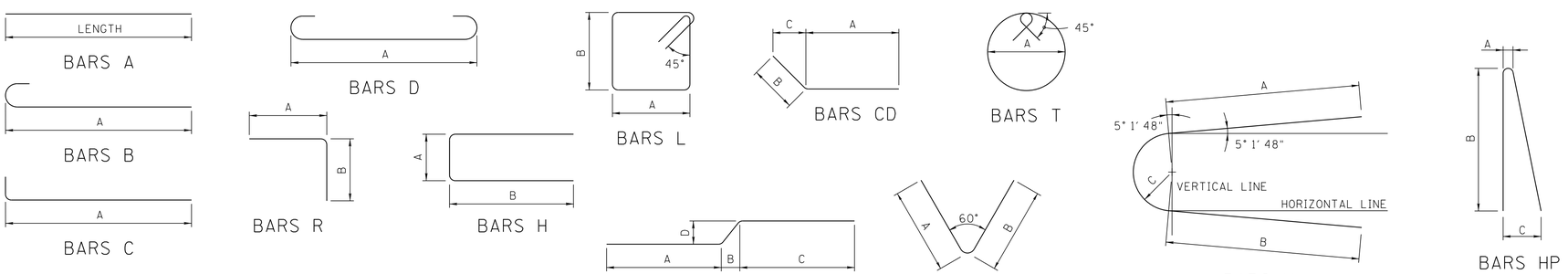


DESIGNED BY E. SLAYTON DATE 3-10
DRAWN BY P. MOSHER (JDT) DATE 8-11
SUPERVISED BY MBC/HMB DATE 8-11
CHECKED BY E. SLAYTON DATE 4-14

STATE OF TENNESSEE
DEPARTMENT OF TRANSPORTATION

BILL OF STEEL
ALTERNATE "A"
STATE ROUTE 50
OVER
DUCK RIVER
STATION 37+10.00
LOG MILE 14.04
HICKMAN COUNTY
2014

CORRECT Wayne G. Sieger
ENGINEER OF STRUCTURES

U-52-41

BOS1008.DGN

# BILL OF STEEL

PIN: 105351.00
CONST. NO. 41056-3217-94

| PROJECT NO. | YEAR | SHEET NO. |
|---|---|---|
| BR-STP-50(29) | 2014 | |

REVISIONS

| NO. | DATE | BY | BRIEF DESCRIPTION |
|---|---|---|---|
| | | | |

## PIER NO. 5

| BAR | LOCATION | SIZE | NO. REQ'D | BENDING DIMENSIONS A | B | C | D | LENGTH |
|---|---|---|---|---|---|---|---|---|
| A950 | CAP (PH. 1) | 9 | 16 | | | | | 19'-11" |
| A951 | CAP (PH. 2) | 9 | 16 | | | | | 17'-5" |
| A956 | COLUMN/CAP (PH. 2) | 9 | 26 | | | | | 32'-2" |
| A1154 | COLUMN/CAP (PH. 1) | 11 | 30 | | | | | 33'-5" |
| B950 | CAP (PH. 1) | 9 | 2 | 21'-5" | | | | 22'-8" |
| B951 | CAP (PH. 2) | 9 | 2 | 18'-11" | | | | 20'-2" |
| B952 | CAP (PH. 1) | 9 | 2 | 21'-3" | | | | 22'-6" |
| B953 | CAP (PH. 2) | 9 | 2 | 18'-9" | | | | 20'-0" |
| B954 | CAP (PH. 1) | 9 | 2 | 20'-11" | | | | 22'-2" |
| B955 | CAP (PH. 2) | 9 | 2 | 18'-5" | | | | 19'-8" |
| B956 | CAP (PH. 1) | 9 | 2 | 20'-2" | | | | 21'-5" |
| B957 | CAP (PH. 2) | 9 | 2 | 17'-8" | | | | 18'-11" |
| C950 | FOOTING/COLUMN (PH. 2) | 9 | 26 | 9'-0" | | | | 10'-7" |
| C1150 | FOOTING/COLUMN (PH. 1) | 11 | 30 | 13'-2" | | | | 15'-2" |
| CD550 | CAP (PH. 1) | 5 | 10 | 13'-3" | 8'-9" | 8'-8½" | | 22'-0" |
| CD551 | CAP (PH. 2) | 5 | 10 | 8'-6⅜" | 8'-9" | 8'-8½" | | 17'-4" |
| CD553 | CAP | 5 | 4 | 8'-9" | 8'-10" | 7'-9" | | 17'-7" |
| CD554 | CAP | 5 | 4 | 4'-10⅞" | 4'-11½" | 4'-11⅝" | | 9'-11" |
| CD555 | CAP | 5 | 8 | 8'-9" | 9'-11" | 9'-7" | | 18'-8" |
| D650 | FOOTINGS | 6 | 73 | 9'-6" | | | | 10'-10" |
| D651 | FOOTING (PH. 1) | 6 | 13 | 14'-6" | | | | 15'-10" |
| D750 | FOOTING (PH. 2) | 7 | 38 | 9'-6" | | | | 11'-2" |
| D950 | FOOTING (PH. 1) | 9 | 23 | 14'-6" | | | | 17'-0" |
| H550 | RISER BLOCK (PH. 1) | 5 | 4 | 3'-0" | 1'-4" | | | 5'-8" |
| H551 | RISER BLOCK (PH. 1) | 5 | 4 | 2'-2" | 1'-4" | | | 4'-10" |
| H650 | CAP | 6 | 12 | 5'-2" | 4'-8" | | | 14'-6" |
| H651 | CAP | 6 | 4 | 3'-7" | 3'-6" | | | 10'-7" |
| H652 | CAP | 6 | 4 | 2'-3" | 3'-3" | | | 8'-9" |
| SERIES | | | | | | | | |
| L651 | CAP | 6 | 8 | ✳ | 2'-11" | | | 121'-4" |
| | | | | ✳ DIM. "A" VARIES FROM 4'-4" TO 5'-10" IN INC. OF 3" (7 BARS) | | | | |
| L652 | CAP | 6 | 6 | 4'-2" | 3'-6" | | | 16'-8" |
| T550 | COLUMNS | 5 | 56 | 4'-6" | | | | 15'-4" |
| U550 | CAP | 5 | 10 | 2'-2" | 2'-2" | 1'-9" | | 9'-10" |

## PIER NO. 6

| BAR | LOCATION | SIZE | NO. REQ'D | BENDING DIMENSIONS A | B | C | D | LENGTH |
|---|---|---|---|---|---|---|---|---|
| A950 | CAP (PH. 1) | 9 | 16 | | | | | 19'-11" |
| A951 | CAP (PH. 2) | 9 | 16 | | | | | 17'-5" |
| A957 | COLUMN/CAP (PH. 2) | 9 | 26 | | | | | 32'-11" |
| A1155 | COLUMN/CAP (PH. 1) | 11 | 30 | | | | | 34'-2" |
| B950 | CAP (PH. 1) | 9 | 2 | 21'-5" | | | | 22'-8" |
| B951 | CAP (PH. 2) | 9 | 2 | 18'-11" | | | | 20'-2" |
| B952 | CAP (PH. 1) | 9 | 2 | 21'-3" | | | | 22'-6" |
| B953 | CAP (PH. 2) | 9 | 2 | 18'-9" | | | | 20'-0" |
| B954 | CAP (PH. 1) | 9 | 2 | 20'-11" | | | | 22'-2" |
| B955 | CAP (PH. 2) | 9 | 2 | 18'-5" | | | | 19'-8" |
| B956 | CAP (PH. 1) | 9 | 2 | 20'-2" | | | | 21'-5" |
| B957 | CAP (PH. 2) | 9 | 2 | 17'-8" | | | | 18'-11" |
| C950 | FOOTING/COLUMN (PH. 2) | 9 | 26 | 9'-0" | | | | 10'-7" |
| C1150 | FOOTING/COLUMN (PH. 1) | 11 | 30 | 13'-2" | | | | 15'-2" |
| CD550 | CAP (PH. 1) | 5 | 10 | 13'-3" | 8'-9" | 8'-8½" | | 22'-0" |
| CD551 | CAP (PH. 2) | 5 | 10 | 8'-6⅜" | 8'-9" | 8'-8½" | | 17'-4" |
| CD553 | CAP | 5 | 4 | 8'-9" | 8'-10" | 7'-9" | | 17'-7" |
| CD554 | CAP | 5 | 4 | 4'-10⅞" | 4'-11½" | 4'-11⅝" | | 9'-11" |
| CD555 | CAP | 5 | 8 | 8'-9" | 9'-11" | 9'-7" | | 18'-8" |
| D650 | FOOTINGS | 6 | 73 | 9'-6" | | | | 10'-10" |
| D651 | FOOTING (PH. 1) | 6 | 13 | 14'-6" | | | | 15'-10" |
| D750 | FOOTING (PH. 2) | 7 | 38 | 9'-6" | | | | 11'-2" |
| D950 | FOOTING (PH. 1) | 9 | 23 | 14'-6" | | | | 17'-0" |
| H550 | RISER BLOCK (PH. 1) | 5 | 4 | 3'-0" | 1'-4" | | | 5'-8" |
| H551 | RISER BLOCK (PH. 1) | 5 | 4 | 2'-2" | 1'-4" | | | 4'-10" |
| H650 | CAP | 6 | 12 | 5'-2" | 4'-8" | | | 14'-6" |
| H651 | CAP | 6 | 4 | 3'-7" | 3'-6" | | | 10'-7" |
| H652 | CAP | 6 | 4 | 2'-3" | 3'-3" | | | 8'-9" |
| SERIES | | | | | | | | |
| L651 | CAP | 6 | 8 | ✳ | 2'-11" | | | 121'-4" |
| | | | | ✳ DIM. "A" VARIES FROM 4'-4" TO 5'-10" IN INC. OF 3" (7 BARS) | | | | |
| L652 | CAP | 6 | 6 | 4'-2" | 3'-6" | | | 16'-8" |
| T550 | COLUMNS | 5 | 57 | 4'-6" | | | | 15'-4" |
| U550 | CAP | 5 | 10 | 2'-2" | 2'-2" | 1'-9" | | 9'-10" |

## PIER NO. 7

| BAR | LOCATION | SIZE | NO. REQ'D | BENDING DIMENSIONS A | B | C | D | LENGTH |
|---|---|---|---|---|---|---|---|---|
| A950 | CAP (PH. 1) | 9 | 16 | | | | | 19'-11" |
| A951 | CAP (PH. 2) | 9 | 16 | | | | | 17'-5" |
| A958 | COLUMN/CAP (PH. 2) | 9 | 52 | | | | | 46'-2" |
| A1156 | COLUMN/CAP (PH. 1) | 11 | 68 | | | | | 48'-10" |
| A1157 | COLUMN/CAP (PH. 1) | 11 | 27 | | | | | 59'-8" |
| B950 | CAP (PH. 1) | 9 | 2 | 21'-5" | | | | 22'-8" |
| B951 | CAP (PH. 2) | 9 | 2 | 18'-11" | | | | 20'-2" |
| B952 | CAP (PH. 1) | 9 | 2 | 21'-3" | | | | 22'-6" |
| B953 | CAP (PH. 2) | 9 | 2 | 18'-9" | | | | 20'-0" |
| B954 | CAP (PH. 1) | 9 | 2 | 20'-11" | | | | 22'-2" |
| B955 | CAP (PH. 2) | 9 | 2 | 18'-5" | | | | 19'-8" |
| B956 | CAP (PH. 1) | 9 | 2 | 20'-2" | | | | 21'-5" |
| B957 | CAP (PH. 2) | 9 | 2 | 17'-8" | | | | 18'-11" |
| CD550 | CAP (PH. 1) | 5 | 10 | 13'-3" | 8'-9" | 8'-8½" | | 22'-0" |
| CD551 | CAP (PH. 2) | 5 | 10 | 8'-6⅜" | 8'-9" | 8'-8½" | | 17'-4" |
| CD553 | CAP | 5 | 4 | 8'-9" | 8'-10" | 7'-9" | | 17'-7" |
| CD554 | CAP | 5 | 4 | 4'-10⅞" | 4'-11½" | 4'-11⅝" | | 9'-11" |
| CD555 | CAP | 5 | 8 | 8'-9" | 9'-11" | 9'-7" | | 18'-8" |
| H550 | RISER BLOCK (PH. 1) | 5 | 4 | 3'-0" | 1'-4" | | | 5'-8" |
| H551 | RISER BLOCK (PH. 1) | 5 | 4 | 2'-2" | 1'-4" | | | 4'-10" |
| H650 | CAP | 6 | 12 | 5'-2" | 4'-8" | | | 14'-6" |
| H651 | CAP | 6 | 4 | 3'-7" | 3'-6" | | | 10'-7" |
| H652 | CAP | 6 | 4 | 2'-3" | 3'-3" | | | 8'-9" |
| SERIES | | | | | | | | |
| L651 | CAP | 6 | 8 | ✳ | 2'-11" | | | 121'-4" |
| | | | | ✳ DIM. "A" VARIES FROM 4'-4" TO 5'-10" IN INC. OF 3" (7 BARS) | | | | |
| L652 | CAP | 6 | 6 | 4'-2" | 3'-6" | | | 16'-8" |
| T550 | COLUMNS | 5 | 164 | 4'-6" | | | | 15'-4" |
| T551 | COLUMN (PH. 1) | 5 | 60 | 4'-0" | | | | 13'-9" |
| U550 | CAP | 5 | 10 | 2'-2" | 2'-2" | 1'-9" | | 9'-10" |

## PIER NO. 8

| BAR | LOCATION | SIZE | NO. REQ'D | BENDING DIMENSIONS A | B | C | D | LENGTH |
|---|---|---|---|---|---|---|---|---|
| A950 | CAP (PH. 1) | 9 | 16 | | | | | 19'-11" |
| A951 | CAP (PH. 2) | 9 | 16 | | | | | 17'-5" |
| A959 | COLUMN/CAP (PH. 2) | 9 | 52 | | | | | 35'-9" |
| A1158 | COLUMN/CAP (PH. 1) | 11 | 60 | | | | | 38'-6" |
| B950 | CAP (PH. 1) | 9 | 2 | 21'-5" | | | | 22'-8" |
| B951 | CAP (PH. 2) | 9 | 2 | 18'-11" | | | | 20'-2" |
| B952 | CAP (PH. 1) | 9 | 2 | 21'-3" | | | | 22'-6" |
| B953 | CAP (PH. 2) | 9 | 2 | 18'-9" | | | | 20'-0" |
| B954 | CAP (PH. 1) | 9 | 2 | 20'-11" | | | | 22'-2" |
| B955 | CAP (PH. 2) | 9 | 2 | 18'-5" | | | | 19'-8" |
| B956 | CAP (PH. 1) | 9 | 2 | 20'-2" | | | | 21'-5" |
| B957 | CAP (PH. 2) | 9 | 2 | 17'-8" | | | | 18'-11" |
| CD550 | CAP (PH. 1) | 5 | 10 | 13'-3" | 8'-9" | 8'-8½" | | 22'-0" |
| CD551 | CAP (PH. 2) | 5 | 10 | 8'-6⅜" | 8'-9" | 8'-8½" | | 17'-4" |
| CD553 | CAP | 5 | 4 | 8'-9" | 8'-10" | 7'-9" | | 17'-7" |
| CD554 | CAP | 5 | 4 | 4'-10⅞" | 4'-11½" | 4'-11⅝" | | 9'-11" |
| CD555 | CAP | 5 | 8 | 8'-9" | 9'-11" | 9'-7" | | 18'-8" |
| H550 | RISER BLOCK (PH. 1) | 5 | 4 | 3'-0" | 1'-4" | | | 5'-8" |
| H551 | RISER BLOCK (PH. 1) | 5 | 4 | 2'-2" | 1'-4" | | | 4'-10" |
| H650 | CAP | 6 | 12 | 5'-2" | 4'-8" | | | 14'-6" |
| H651 | CAP | 6 | 4 | 3'-7" | 3'-6" | | | 10'-7" |
| H652 | CAP | 6 | 4 | 2'-3" | 3'-3" | | | 8'-9" |
| SERIES | | | | | | | | |
| L651 | CAP | 6 | 8 | ✳ | 2'-11" | | | 121'-4" |
| | | | | ✳ DIM. "A" VARIES FROM 4'-4" TO 5'-10" IN INC. OF 3" (7 BARS) | | | | |
| L652 | CAP | 6 | 6 | 4'-2" | 3'-6" | | | 16'-8" |
| T550 | COLUMNS | 5 | 124 | 4'-6" | | | | 15'-4" |
| U550 | CAP | 5 | 10 | 2'-2" | 2'-2" | 1'-9" | | 9'-10" |

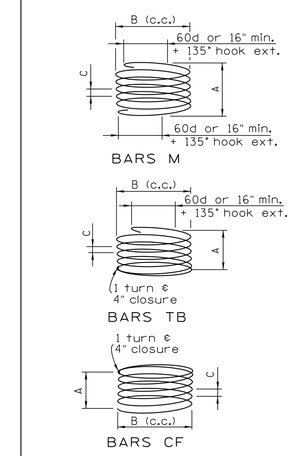


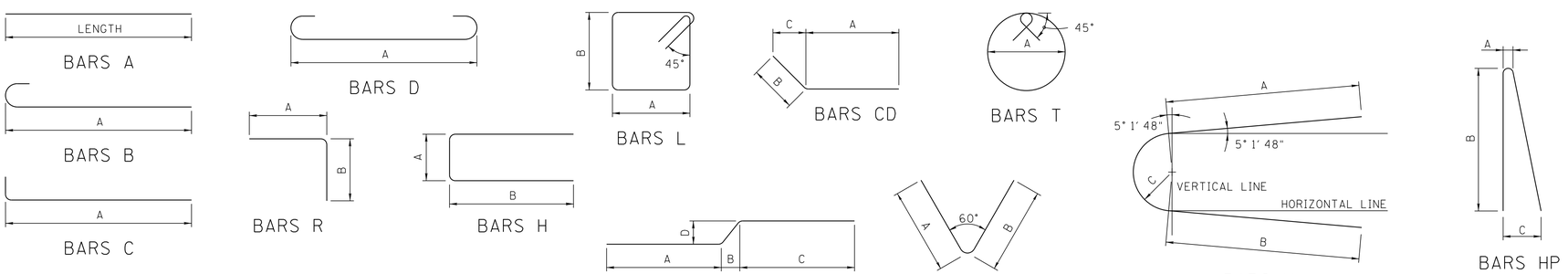


## REINFORCING STEEL CODE

| TYPE | SIZE | SERIES |
|---|---|---|
| A | 5 | 06 |

NOTE: DIMENSIONS SHOWN ON THIS SHEET ARE OUTSIDE TO OUTSIDE OF BAR. STANDARD C.R.S.I. HOOK DETAILS SHALL APPLY, EXCEPT AS NOTED.

NOTE: THE SUFFIX E FOR BARS SO MARKED DENOTES EPOXY COATED REINFORCEMENT.

STATE OF TENNESSEE
DEPARTMENT OF TRANSPORTATION

BILL OF STEEL
ALTERNATE "A"
STATE ROUTE 50
OVER
DUCK RIVER
STATION 37+10.00
LOG MILE 14.04
HICKMAN COUNTY
2014

HARDIE M. BROOKS, JR. REGISTERED ENGINEER AGRICULTURE TENNESSEE STATE OF TENNESSEE

CORRECT Wayne G. Sieger
ENGINEER OF STRUCTURES

| | | | |
|---|---|---|---|
| DESIGNED BY | E. SLAYTON | DATE | 3-10 |
| DRAWN BY | P. MOSHER (JDT) | DATE | 8-11 |
| SUPERVISED BY | MBC/HMB | DATE | 8-11 |
| CHECKED BY | E. SLAYTON | DATE | 4-14 |

U-52-42

# BILL OF STEEL

PIN: 105351.00
CONST. NO. 41056-3217-94

| PROJECT NO. | YEAR | SHEET NO. |
|---|---|---|
| BR-STP-50(29) | 2014 | |

REVISIONS

| NO. | DATE | BY | BRIEF DESCRIPTION |
|---|---|---|---|
| | | | |

## PIER NO. 1

| BAR | LOCATION | SIZE | NO. REQ'D | BENDING DIMENSIONS A | B | C | D | LENGTH |
|---|---|---|---|---|---|---|---|---|
| A950 | CAP (PH. 1) | 9 | 16 | | | | | 19'-11" |
| A951 | CAP (PH. 2) | 9 | 16 | | | | | 17'-5" |
| A952 | COLUMN/CAP (PH. 2) | 9 | 26 | | | | | 41'-8" |
| A1150 | COLUMN/CAP (PH. 1) | 11 | 30 | | | | | 43'-8" |
| B950 | CAP (PH. 1) | 9 | 2 | 21'-5" | | | | 22'-8" |
| B951 | CAP (PH. 2) | 9 | 2 | 18'-11" | | | | 20'-2" |
| B952 | CAP (PH. 1) | 9 | 2 | 21'-3" | | | | 22'-6" |
| B953 | CAP (PH. 2) | 9 | 2 | 18'-9" | | | | 20'-0" |
| B954 | CAP (PH. 1) | 9 | 2 | 20'-11" | | | | 22'-2" |
| B955 | CAP (PH. 2) | 9 | 2 | 18'-5" | | | | 19'-8" |
| B956 | CAP (PH. 1) | 9 | 2 | 20'-2" | | | | 21'-5" |
| B957 | CAP (PH. 2) | 9 | 2 | 17'-8" | | | | 18'-11" |
| CD550 | CAP (PH. 1) | 5 | 10 | 13'-3" | 8'-9" | 8'-8½" | | 22'-0" |
| CD551 | CAP (PH. 2) | 5 | 10 | 8'-6⅜" | 8'-9" | 8'-8½" | | 17'-4" |
| CD553 | CAP | 5 | 4 | 8'-9" | 8'-10" | 7'-9" | | 17'-7" |
| CD554 | CAP | 5 | 4 | 4'-10⅞" | 4'-11½" | 4'-11 5/16" | | 9'-11" |
| CD555 | CAP | 5 | 8 | 8'-9" | 9'-11" | 9'-7" | | 18'-8" |
| H550 | RISER BLOCK (PH. 1) | 5 | 4 | 3'-0" | 1'-4" | | | 5'-8" |
| H551 | RISER BLOCK (PH. 1) | 5 | 4 | 2'-2" | 1'-4" | | | 4'-10" |
| H650 | CAP | 6 | 12 | 5'-2" | 4'-8" | | | 14'-6" |
| H651 | CAP | 6 | 4 | 3'-7" | 3'-6" | | | 10'-7" |
| H652 | CAP | 6 | 4 | 2'-3" | 3'-3" | | | 8'-9" |
| SERIES | | | | | | | | |
| L651 | CAP | 6 | 8 | ✳ | 2'-11" | | | 121'-4" |
| | | | | ✳ DIM. "A" VARIES FROM 4'-4" TO 5'-10" IN INC. OF 3" (7 BARS) | | | | |
| L652 | CAP | 6 | 6 | 4'-2" | 3'-6" | | | 16'-8" |
| T550 | COLUMNS | 5 | 76 | 4'-6" | | | | 15'-4" |
| U550 | CAP | 5 | 10 | 2'-2" | 2'-2" | 1'-9" | | 9'-10" |

## PIER NO. 2

| BAR | LOCATION | SIZE | NO. REQ'D | BENDING DIMENSIONS A | B | C | D | LENGTH |
|---|---|---|---|---|---|---|---|---|
| A950 | CAP (PH. 1) | 9 | 16 | | | | | 19'-11" |
| A951 | CAP (PH. 2) | 9 | 16 | | | | | 17'-5" |
| A953 | COLUMN/CAP (PH. 2) | 9 | 52 | | | | | 36'-2" |
| A1151 | COLUMN/CAP (PH. 1) | 11 | 60 | | | | | 38'-10" |
| B950 | CAP (PH. 1) | 9 | 2 | 21'-5" | | | | 22'-8" |
| B951 | CAP (PH. 2) | 9 | 2 | 18'-11" | | | | 20'-2" |
| B952 | CAP (PH. 1) | 9 | 2 | 21'-3" | | | | 22'-6" |
| B953 | CAP (PH. 2) | 9 | 2 | 18'-9" | | | | 20'-0" |
| B954 | CAP (PH. 1) | 9 | 2 | 20'-11" | | | | 22'-2" |
| B955 | CAP (PH. 2) | 9 | 2 | 18'-5" | | | | 19'-8" |
| B956 | CAP (PH. 1) | 9 | 2 | 20'-2" | | | | 21'-5" |
| B957 | CAP (PH. 2) | 9 | 2 | 17'-8" | | | | 18'-11" |
| CD550 | CAP (PH. 1) | 5 | 10 | 13'-3" | 8'-9" | 8'-8½" | | 22'-0" |
| CD551 | CAP (PH. 2) | 5 | 10 | 8'-6⅜" | 8'-9" | 8'-8½" | | 17'-4" |
| CD553 | CAP | 5 | 4 | 8'-9" | 8'-10" | 7'-9" | | 17'-7" |
| CD554 | CAP | 5 | 4 | 4'-10⅞" | 4'-11½" | 4'-11 5/16" | | 9'-11" |
| CD555 | CAP | 5 | 8 | 8'-9" | 9'-11" | 9'-7" | | 18'-8" |
| H550 | RISER BLOCK (PH. 1) | 5 | 4 | 3'-0" | 1'-4" | | | 5'-8" |
| H551 | RISER BLOCK (PH. 1) | 5 | 4 | 2'-2" | 1'-4" | | | 4'-10" |
| H650 | CAP | 6 | 12 | 5'-2" | 4'-8" | | | 14'-6" |
| H651 | CAP | 6 | 4 | 3'-7" | 3'-6" | | | 10'-7" |
| H652 | CAP | 6 | 4 | 2'-3" | 3'-3" | | | 8'-9" |
| SERIES | | | | | | | | |
| L651 | CAP | 6 | 8 | ✳ | 2'-11" | | | 121'-4" |
| | | | | ✳ DIM. "A" VARIES FROM 4'-4" TO 5'-10" IN INC. OF 3" (7 BARS) | | | | |
| L652 | CAP | 6 | 6 | 4'-2" | 3'-6" | | | 16'-8" |
| T550 | COLUMNS | 5 | 124 | 4'-6" | | | | 15'-4" |
| U550 | CAP | 5 | 10 | 2'-2" | 2'-2" | 1'-9" | | 9'-10" |

## PIER NO. 3

| BAR | LOCATION | SIZE | NO. REQ'D | BENDING DIMENSIONS A | B | C | D | LENGTH |
|---|---|---|---|---|---|---|---|---|
| A950 | CAP (PH. 1) | 9 | 16 | | | | | 19'-11" |
| A951 | CAP (PH. 2) | 9 | 16 | | | | | 17'-5" |
| A954 | COLUMN/CAP (PH. 2) | 9 | 52 | | | | | 36'-0" |
| A1152 | COLUMN/CAP (PH. 1) | 11 | 60 | | | | | 38'-9" |
| B950 | CAP (PH. 1) | 9 | 2 | 21'-5" | | | | 22'-8" |
| B951 | CAP (PH. 2) | 9 | 2 | 18'-11" | | | | 20'-2" |
| B952 | CAP (PH. 1) | 9 | 2 | 21'-3" | | | | 22'-6" |
| B953 | CAP (PH. 2) | 9 | 2 | 18'-9" | | | | 20'-0" |
| B954 | CAP (PH. 1) | 9 | 2 | 20'-11" | | | | 22'-2" |
| B955 | CAP (PH. 2) | 9 | 2 | 18'-5" | | | | 19'-8" |
| B956 | CAP (PH. 1) | 9 | 2 | 20'-2" | | | | 21'-5" |
| B957 | CAP (PH. 2) | 9 | 2 | 17'-8" | | | | 18'-11" |
| CD550 | CAP (PH. 1) | 5 | 10 | 13'-3" | 8'-9" | 8'-8½" | | 22'-0" |
| CD551 | CAP (PH. 2) | 5 | 10 | 8'-6⅜" | 8'-9" | 8'-8½" | | 17'-4" |
| CD553 | CAP | 5 | 4 | 8'-9" | 8'-10" | 7'-9" | | 17'-7" |
| CD554 | CAP | 5 | 4 | 4'-10⅞" | 4'-11½" | 4'-11 5/16" | | 9'-11" |
| CD555 | CAP | 5 | 8 | 8'-9" | 9'-11" | 9'-7" | | 18'-8" |
| H550 | RISER BLOCK (PH. 1) | 5 | 4 | 3'-0" | 1'-4" | | | 5'-8" |
| H551 | RISER BLOCK (PH. 1) | 5 | 4 | 2'-2" | 1'-4" | | | 4'-10" |
| H650 | CAP | 6 | 12 | 5'-2" | 4'-8" | | | 14'-6" |
| H651 | CAP | 6 | 4 | 3'-7" | 3'-6" | | | 10'-7" |
| H652 | CAP | 6 | 4 | 2'-3" | 3'-3" | | | 8'-9" |
| SERIES | | | | | | | | |
| L651 | CAP | 6 | 8 | ✳ | 2'-11" | | | 121'-4" |
| | | | | ✳ DIM. "A" VARIES FROM 4'-4" TO 5'-10" IN INC. OF 3" (7 BARS) | | | | |
| L652 | CAP | 6 | 6 | 4'-2" | 3'-6" | | | 16'-8" |
| T550 | COLUMNS | 5 | 124 | 4'-6" | | | | 15'-4" |
| U550 | CAP | 5 | 10 | 2'-2" | 2'-2" | 1'-9" | | 9'-10" |

## PIER NO. 4

| BAR | LOCATION | SIZE | NO. REQ'D | BENDING DIMENSIONS A | B | C | D | LENGTH |
|---|---|---|---|---|---|---|---|---|
| A950 | CAP (PH. 1) | 9 | 16 | | | | | 19'-11" |
| A951 | CAP (PH. 2) | 9 | 16 | | | | | 17'-5" |
| A954 | COLUMN/CAP (PH. 2) | 9 | 52 | | | | | 36'-0" |
| A1152 | COLUMN/CAP (PH. 1) | 11 | 60 | | | | | 38'-9" |
| B950 | CAP (PH. 1) | 9 | 2 | 21'-5" | | | | 22'-8" |
| B951 | CAP (PH. 2) | 9 | 2 | 18'-11" | | | | 20'-2" |
| B952 | CAP (PH. 1) | 9 | 2 | 21'-3" | | | | 22'-6" |
| B953 | CAP (PH. 2) | 9 | 2 | 18'-9" | | | | 20'-0" |
| B954 | CAP (PH. 1) | 9 | 2 | 20'-11" | | | | 22'-2" |
| B955 | CAP (PH. 2) | 9 | 2 | 18'-5" | | | | 19'-8" |
| B956 | CAP (PH. 1) | 9 | 2 | 20'-2" | | | | 21'-5" |
| B957 | CAP (PH. 2) | 9 | 2 | 17'-8" | | | | 18'-11" |
| CD550 | CAP (PH. 1) | 5 | 10 | 13'-3" | 8'-9" | 8'-8½" | | 22'-0" |
| CD551 | CAP (PH. 2) | 5 | 10 | 8'-6⅜" | 8'-9" | 8'-8½" | | 17'-4" |
| CD553 | CAP | 5 | 4 | 8'-9" | 8'-10" | 7'-9" | | 17'-7" |
| CD554 | CAP | 5 | 4 | 4'-10⅞" | 4'-11½" | 4'-11 5/16" | | 9'-11" |
| CD555 | CAP | 5 | 8 | 8'-9" | 9'-11" | 9'-7" | | 18'-8" |
| H550 | RISER BLOCK (PH. 1) | 5 | 4 | 3'-0" | 1'-4" | | | 5'-8" |
| H551 | RISER BLOCK (PH. 1) | 5 | 4 | 2'-2" | 1'-4" | | | 4'-10" |
| H650 | CAP | 6 | 12 | 5'-2" | 4'-8" | | | 14'-6" |
| H651 | CAP | 6 | 4 | 3'-7" | 3'-6" | | | 10'-7" |
| H652 | CAP | 6 | 4 | 2'-3" | 3'-3" | | | 8'-9" |
| SERIES | | | | | | | | |
| L651 | CAP | 6 | 8 | ✳ | 2'-11" | | | 121'-4" |
| | | | | ✳ DIM. "A" VARIES FROM 4'-4" TO 5'-10" IN INC. OF 3" (7 BARS) | | | | |
| L652 | CAP | 6 | 6 | 4'-2" | 3'-6" | | | 16'-8" |
| T550 | COLUMNS | 5 | 124 | 4'-6" | | | | 15'-4" |
| U550 | CAP | 5 | 10 | 2'-2" | 2'-2" | 1'-9" | | 9'-10" |

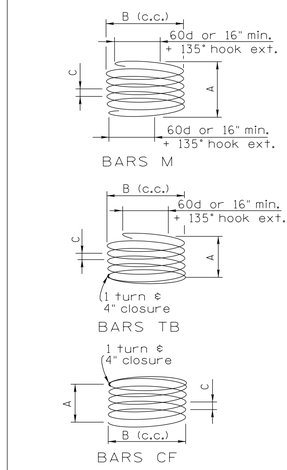


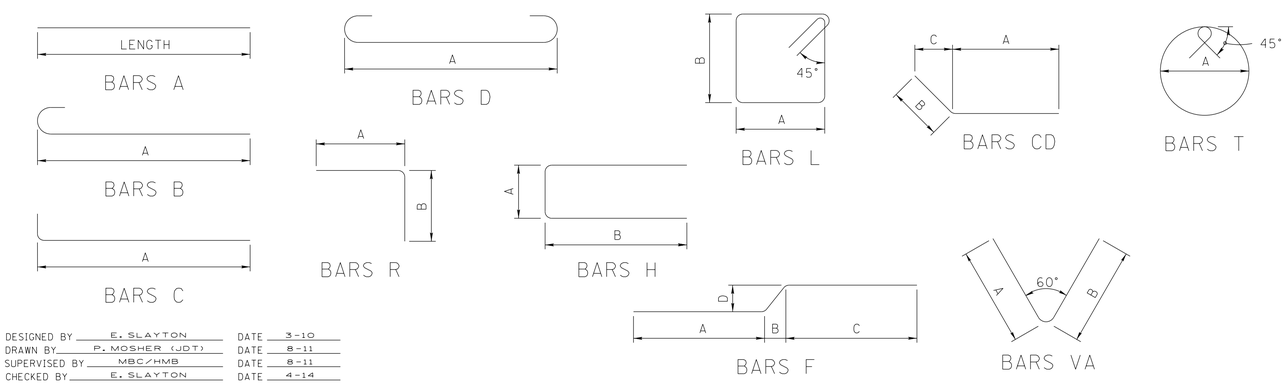


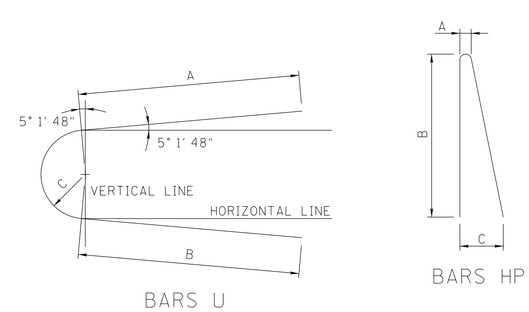


## REINFORCING STEEL CODE

| TYPE | SIZE | SERIES |
|---|---|---|
| A | 5 | 06 |

NOTE: DIMENSIONS SHOWN ON THIS SHEET ARE OUTSIDE TO OUTSIDE OF BAR. STANDARD C.R.S.I. HOOK DETAILS SHALL APPLY, EXCEPT AS NOTED.

NOTE: THE SUFFIX E FOR BARS SO MARKED DENOTES EPOXY COATED REINFORCEMENT.

| | | | |
|---|---|---|---|
| DESIGNED BY | E. SLAYTON | DATE | 3-10 |
| DRAWN BY | P. MOSHER (JDT) | DATE | 8-11 |
| SUPERVISED BY | MBC/HMB | DATE | 8-11 |
| CHECKED BY | E. SLAYTON | DATE | 4-14 |

HARDIE M. BROOKS, JR. STATE OF TENNESSEE Registered Engineer AGRICULTURE

CORRECT Wayne G. Sieger
ENGINEER OF STRUCTURES

STATE OF TENNESSEE
DEPARTMENT OF TRANSPORTATION

BILL OF STEEL
ALTERNATE "B"
STATE ROUTE 50
OVER
DUCK RIVER
STATION 37+10.00
LOG MILE 14.04
HICKMAN COUNTY
2014

U-52-43

dgnspec
Tn.cfg
Tn.pltcfg

BOS1008(ALT"B").DGN

# BILL OF STEEL

## PIER NO. 5

| BAR | LOCATION | SIZE | NO. REQ'D | BENDING DIMENSIONS A | B | C | D | LENGTH |
|---|---|---|---|---|---|---|---|---|
| A950 | CAP (PH. 1) | 9 | 16 | | | | | 19'-11" |
| A951 | CAP (PH. 2) | 9 | 16 | | | | | 17'-5" |
| A955 | COLUMN/CAP (PH. 2) | 9 | 52 | | | | | 35'-10" |
| A1153 | COLUMN/CAP (PH. 1) | 11 | 60 | | | | | 38'-6" |
| B950 | CAP (PH. 1) | 9 | 2 | 21'-5" | | | | 22'-8" |
| B951 | CAP (PH. 2) | 9 | 2 | 18'-11" | | | | 20'-2" |
| B952 | CAP (PH. 1) | 9 | 2 | 21'-3" | | | | 22'-6" |
| B953 | CAP (PH. 2) | 9 | 2 | 18'-9" | | | | 20'-0" |
| B954 | CAP (PH. 1) | 9 | 2 | 20'-11" | | | | 22'-2" |
| B955 | CAP (PH. 2) | 9 | 2 | 18'-5" | | | | 19'-8" |
| B956 | CAP (PH. 1) | 9 | 2 | 20'-2" | | | | 21'-5" |
| B957 | CAP (PH. 2) | 9 | 2 | 17'-8" | | | | 18'-11" |
| CD550 | CAP (PH. 1) | 5 | 10 | 13'-3" | 8'-9" | 8'-8½" | | 22'-0" |
| CD551 | CAP (PH. 2) | 5 | 10 | 8'-6⅜" | 8'-9" | 8'-8½" | | 17'-4" |
| CD553 | CAP | 5 | 4 | 8'-9" | 8'-10" | 7'-9" | | 17'-7" |
| CD554 | CAP | 5 | 4 | 4'-10⅞" | 4'-11½" | 4'-11⅝" | | 9'-11" |
| CD555 | CAP | 5 | 8 | 8'-9" | 9'-11" | 9'-7" | | 18'-8" |
| H550 | RISER BLOCK (PH. 1) | 5 | 4 | 3'-0" | 1'-4" | | | 5'-8" |
| H551 | RISER BLOCK (PH. 1) | 5 | 4 | 2'-2" | 1'-4" | | | 4'-10" |
| H650 | CAP | 6 | 12 | 5'-2" | 4'-8" | | | 14'-6" |
| H651 | CAP | 6 | 4 | 3'-7" | 3'-6" | | | 10'-7" |
| H652 | CAP | 6 | 4 | 2'-3" | 3'-3" | | | 8'-9" |
| SERIES | | | | | | | | |
| L651 | CAP | 6 | 8 | ✳ | 2'-11" | | | 121'-4" |
| | | | | ✳ DIM. "A" VARIES FROM 4'-4" TO 5'-10" IN INC. OF 3" (7 BARS) | | | | |
| L652 | CAP | 6 | 6 | 4'-2" | 3'-6" | | | 16'-8" |
| T550 | COLUMNS | 5 | 124 | 4'-6" | | | | 15'-4" |
| U550 | CAP | 5 | 10 | 2'-2" | 2'-2" | 1'-9" | | 9'-10" |

## PIER NO. 6

| BAR | LOCATION | SIZE | NO. REQ'D | BENDING DIMENSIONS A | B | C | D | LENGTH |
|---|---|---|---|---|---|---|---|---|
| A950 | CAP (PH. 1) | 9 | 16 | | | | | 19'-11" |
| A951 | CAP (PH. 2) | 9 | 16 | | | | | 17'-5" |
| A956 | COLUMN/CAP (PH. 2) | 9 | 52 | | | | | 36'-11" |
| A1154 | COLUMN/CAP (PH. 1) | 11 | 60 | | | | | 39'-7" |
| B950 | CAP (PH. 1) | 9 | 2 | 21'-5" | | | | 22'-8" |
| B951 | CAP (PH. 2) | 9 | 2 | 18'-11" | | | | 20'-2" |
| B952 | CAP (PH. 1) | 9 | 2 | 21'-3" | | | | 22'-6" |
| B953 | CAP (PH. 2) | 9 | 2 | 18'-9" | | | | 20'-0" |
| B954 | CAP (PH. 1) | 9 | 2 | 20'-11" | | | | 22'-2" |
| B955 | CAP (PH. 2) | 9 | 2 | 18'-5" | | | | 19'-8" |
| B956 | CAP (PH. 1) | 9 | 2 | 20'-2" | | | | 21'-5" |
| B957 | CAP (PH. 2) | 9 | 2 | 17'-8" | | | | 18'-11" |
| CD550 | CAP (PH. 1) | 5 | 10 | 13'-3" | 8'-9" | 8'-8½" | | 22'-0" |
| CD551 | CAP (PH. 2) | 5 | 10 | 8'-6⅜" | 8'-9" | 8'-8½" | | 17'-4" |
| CD553 | CAP | 5 | 4 | 8'-9" | 8'-10" | 7'-9" | | 17'-7" |
| CD554 | CAP | 5 | 4 | 4'-10⅞" | 4'-11½" | 4'-11⅝" | | 9'-11" |
| CD555 | CAP | 5 | 8 | 8'-9" | 9'-11" | 9'-7" | | 18'-8" |
| H550 | RISER BLOCK (PH. 1) | 5 | 4 | 3'-0" | 1'-4" | | | 5'-8" |
| H551 | RISER BLOCK (PH. 1) | 5 | 4 | 2'-2" | 1'-4" | | | 4'-10" |
| H650 | CAP | 6 | 12 | 5'-2" | 4'-8" | | | 14'-6" |
| H651 | CAP | 6 | 4 | 3'-7" | 3'-6" | | | 10'-7" |
| H652 | CAP | 6 | 4 | 2'-3" | 3'-3" | | | 8'-9" |
| SERIES | | | | | | | | |
| L651 | CAP | 6 | 8 | ✳ | 2'-11" | | | 121'-4" |
| | | | | ✳ DIM. "A" VARIES FROM 4'-4" TO 5'-10" IN INC. OF 3" (7 BARS) | | | | |
| L652 | CAP | 6 | 6 | 4'-2" | 3'-6" | | | 16'-8" |
| T550 | COLUMNS | 5 | 128 | 4'-6" | | | | 15'-4" |
| U550 | CAP | 5 | 10 | 2'-2" | 2'-2" | 1'-9" | | 9'-10" |

## PIER NO. 7

| BAR | LOCATION | SIZE | NO. REQ'D | BENDING DIMENSIONS A | B | C | D | LENGTH |
|---|---|---|---|---|---|---|---|---|
| A950 | CAP (PH. 1) | 9 | 16 | | | | | 19'-11" |
| A951 | CAP (PH. 2) | 9 | 16 | | | | | 17'-5" |
| A957 | COLUMN/CAP (PH. 2) | 9 | 52 | | | | | 46'-1" |
| A1155 | COLUMN/CAP (PH. 1) | 11 | 68 | | | | | 48'-10" |
| A1156 | COLUMN/CAP (PH. 1) | 11 | 27 | | | | | 59'-8" |
| B950 | CAP (PH. 1) | 9 | 2 | 21'-5" | | | | 22'-8" |
| B951 | CAP (PH. 2) | 9 | 2 | 18'-11" | | | | 20'-2" |
| B952 | CAP (PH. 1) | 9 | 2 | 21'-3" | | | | 22'-6" |
| B953 | CAP (PH. 2) | 9 | 2 | 18'-9" | | | | 20'-0" |
| B954 | CAP (PH. 1) | 9 | 2 | 20'-11" | | | | 22'-2" |
| B955 | CAP (PH. 2) | 9 | 2 | 18'-5" | | | | 19'-8" |
| B956 | CAP (PH. 1) | 9 | 2 | 20'-2" | | | | 21'-5" |
| B957 | CAP (PH. 2) | 9 | 2 | 17'-8" | | | | 18'-11" |
| CD550 | CAP (PH. 1) | 5 | 10 | 13'-3" | 8'-9" | 8'-8½" | | 22'-0" |
| CD551 | CAP (PH. 2) | 5 | 10 | 8'-6⅜" | 8'-9" | 8'-8½" | | 17'-4" |
| CD553 | CAP | 5 | 4 | 8'-9" | 8'-10" | 7'-9" | | 17'-7" |
| CD554 | CAP | 5 | 4 | 4'-10⅞" | 4'-11½" | 4'-11⅝" | | 9'-11" |
| CD555 | CAP | 5 | 8 | 8'-9" | 9'-11" | 9'-7" | | 18'-8" |
| H550 | RISER BLOCK (PH. 1) | 5 | 4 | 3'-0" | 1'-4" | | | 5'-8" |
| H551 | RISER BLOCK (PH. 1) | 5 | 4 | 2'-2" | 1'-4" | | | 4'-10" |
| H650 | CAP | 6 | 12 | 5'-2" | 4'-8" | | | 14'-6" |
| H651 | CAP | 6 | 4 | 3'-7" | 3'-6" | | | 10'-7" |
| H652 | CAP | 6 | 4 | 2'-3" | 3'-3" | | | 8'-9" |
| SERIES | | | | | | | | |
| L651 | CAP | 6 | 8 | ✳ | 2'-11" | | | 121'-4" |
| | | | | ✳ DIM. "A" VARIES FROM 4'-4" TO 5'-10" IN INC. OF 3" (7 BARS) | | | | |
| L652 | CAP | 6 | 6 | 4'-2" | 3'-6" | | | 16'-8" |
| T550 | COLUMNS | 5 | 164 | 4'-6" | | | | 15'-4" |
| T551 | COLUMNS (PH. 1) | 5 | 60 | 4'-0" | | | | 13'-9" |
| U550 | CAP | 5 | 10 | 2'-2" | 2'-2" | 1'-9" | | 9'-10" |

## PIER NO. 8

| BAR | LOCATION | SIZE | NO. REQ'D | BENDING DIMENSIONS A | B | C | D | LENGTH |
|---|---|---|---|---|---|---|---|---|
| A950 | CAP (PH. 1) | 9 | 16 | | | | | 19'-11" |
| A951 | CAP (PH. 2) | 9 | 16 | | | | | 17'-5" |
| A958 | COLUMN/CAP (PH. 2) | 9 | 52 | | | | | 35'-9" |
| A1157 | COLUMN/CAP (PH. 1) | 11 | 60 | | | | | 38'-6" |
| B950 | CAP (PH. 1) | 9 | 2 | 21'-5" | | | | 22'-8" |
| B951 | CAP (PH. 2) | 9 | 2 | 18'-11" | | | | 20'-2" |
| B952 | CAP (PH. 1) | 9 | 2 | 21'-3" | | | | 22'-6" |
| B953 | CAP (PH. 2) | 9 | 2 | 18'-9" | | | | 20'-0" |
| B954 | CAP (PH. 1) | 9 | 2 | 20'-11" | | | | 22'-2" |
| B955 | CAP (PH. 2) | 9 | 2 | 18'-5" | | | | 19'-8" |
| B956 | CAP (PH. 1) | 9 | 2 | 20'-2" | | | | 21'-5" |
| B957 | CAP (PH. 2) | 9 | 2 | 17'-8" | | | | 18'-11" |
| CD550 | CAP (PH. 1) | 5 | 10 | 13'-3" | 8'-9" | 8'-8½" | | 22'-0" |
| CD551 | CAP (PH. 2) | 5 | 10 | 8'-6⅜" | 8'-9" | 8'-8½" | | 17'-4" |
| CD553 | CAP | 5 | 4 | 8'-9" | 8'-10" | 7'-9" | | 17'-7" |
| CD554 | CAP | 5 | 4 | 4'-10⅞" | 4'-11½" | 4'-11⅝" | | 9'-11" |
| CD555 | CAP | 5 | 8 | 8'-9" | 9'-11" | 9'-7" | | 18'-8" |
| H550 | RISER BLOCK (PH. 1) | 5 | 4 | 3'-0" | 1'-4" | | | 5'-8" |
| H551 | RISER BLOCK (PH. 1) | 5 | 4 | 2'-2" | 1'-4" | | | 4'-10" |
| H650 | CAP | 6 | 12 | 5'-2" | 4'-8" | | | 14'-6" |
| H651 | CAP | 6 | 4 | 3'-7" | 3'-6" | | | 10'-7" |
| H652 | CAP | 6 | 4 | 2'-3" | 3'-3" | | | 8'-9" |
| SERIES | | | | | | | | |
| L651 | CAP | 6 | 8 | ✳ | 2'-11" | | | 121'-4" |
| | | | | ✳ DIM. "A" VARIES FROM 4'-4" TO 5'-10" IN INC. OF 3" (7 BARS) | | | | |
| L652 | CAP | 6 | 6 | 4'-2" | 3'-6" | | | 16'-8" |
| T550 | COLUMNS | 5 | 124 | 4'-6" | | | | 15'-4" |
| U550 | CAP | 5 | 10 | 2'-2" | 2'-2" | 1'-9" | | 9'-10" |

PIN: 105351.00
CONST. NO. 41056-3217-94

| PROJECT NO. | YEAR | SHEET NO. |
|---|---|---|
| BR-STP-50(29) | 2014 | |

REVISIONS

| NO. | DATE | BY | BRIEF DESCRIPTION |
|---|---|---|---|
| | | | |

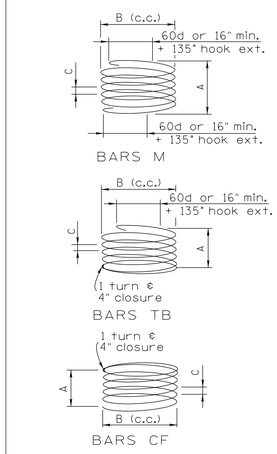


## REINFORCING STEEL CODE

| TYPE | SIZE | SERIES |
|---|---|---|
| A | 5 | 06 |

NOTE: DIMENSIONS SHOWN ON THIS SHEET ARE OUTSIDE TO OUTSIDE OF BAR. STANDARD C.R.S.I. HOOK DETAILS SHALL APPLY, EXCEPT AS NOTED.

NOTE: THE SUFFIX E FOR BARS SO MARKED DENOTES EPOXY COATED REINFORCEMENT.

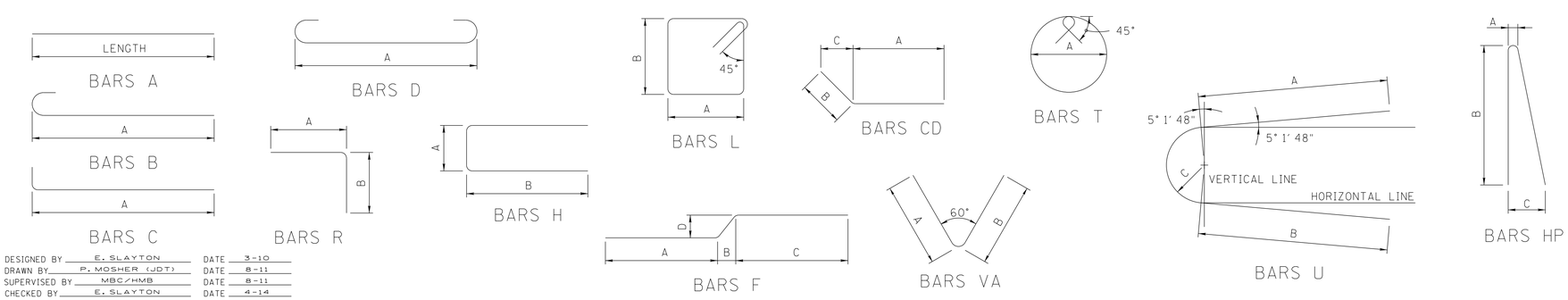


DESIGNED BY E. SLAYTON DATE 3-10
DRAWN BY P. MOSHER (JDT) DATE 8-11
SUPERVISED BY MBC/HMB DATE 8-11
CHECKED BY E. SLAYTON DATE 4-14

CORRECT Wayne G. Sayer
ENGINEER OF STRUCTURES

HARDIE M. BROOKS, JR. STATE OF TENNESSEE

STATE OF TENNESSEE
DEPARTMENT OF TRANSPORTATION

BILL OF STEEL
ALTERNATE "B"
STATE ROUTE 50
OVER
DUCK RIVER
STATION 37+10.00
LOG MILE 14.04
HICKMAN COUNTY
2014

U-52-44

Date: 3/26/2014
Time: 8:00:00 AM