PROJECT NO.	YEAR	SHEET NO.
32003-4221-04	2014	

REVISIONS

NO.	DATE	BY	BRIEF DESCRIPTION
1	08/12/14	CDV	CHANGED NOTE.

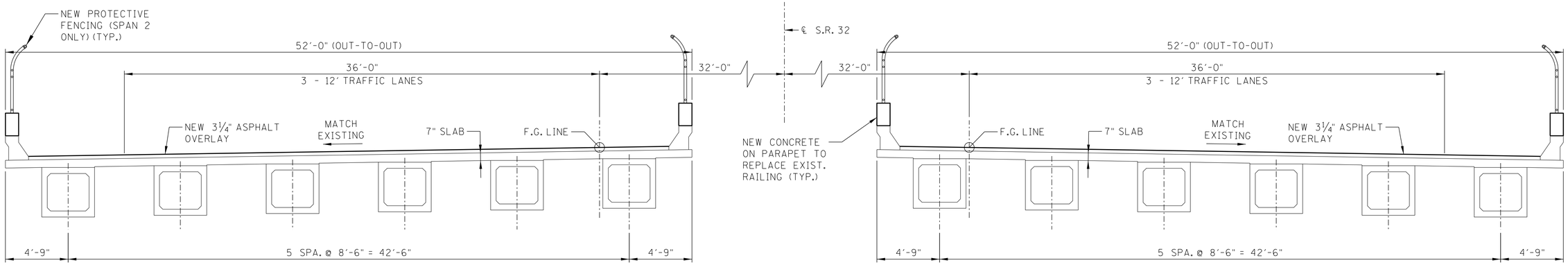

TYPICAL SECTION

(LOOKING AHEAD)

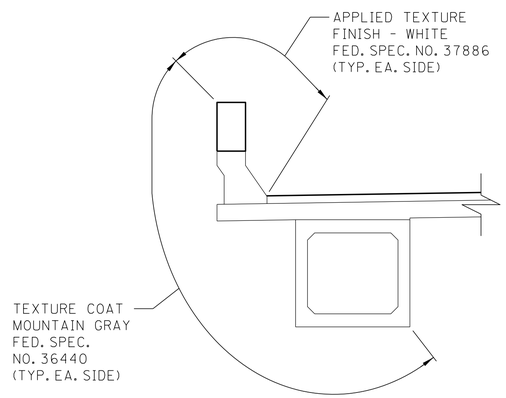

APPLIED TEXTURE FINISH SKETCH

IN ADDITION TO THE SURFACES SHOWN, ALL EXPOSED SURFACES OF THE ABUTMENTS, BENTS/PIERS, DIAPHRAGMS, AND CRASHWALLS ARE TO RECEIVE AN APPLIED TEXTURE FINISH, MOUNTAIN GREY, (FED. SPEC. NO. 36440).

COST OF TEXTURE COATING SHALL BE INCLUDED IN ITEM NO. 604-04.02.

THE CONTRACTOR SHALL USE CONTAINMENT SCREENS OR OTHER MEASURES AS NECESSARY TO PREVENT ANY TEXTURE COATING FROM ENTERING THE ENVIRONMENT. CONTAINMENT MEASURES SHALL BE APPROVED BY THE ENGINEER AND COST SHALL BE INCLUDED IN ITEMS BID ON.

THE EXISTING SURFACES THAT ARE TO RECEIVE A TEXTURE FINISH SHALL BE FREE OF ALL FLAKING TEXTURE COATING, RUST, DIRT, OIL, AND OTHER FOREIGN SUBSTANCES PRIOR TO THE APPLICATION OF THE TEXTURE FINISH. THE SURFACE SHALL BE CLEANED TO THE COMPLETE SATISFACTION OF THE ENGINEER USING A HIGH PRESSURE WATER WASH. COST TO BE INCLUDED IN ITEM NO. 604-04.02.

THE WASH WATER IS TO BE FILTERED AND PAINT CHIPS AND DEBRIS COLLECTED PRIOR TO RELEASE OF WATER.

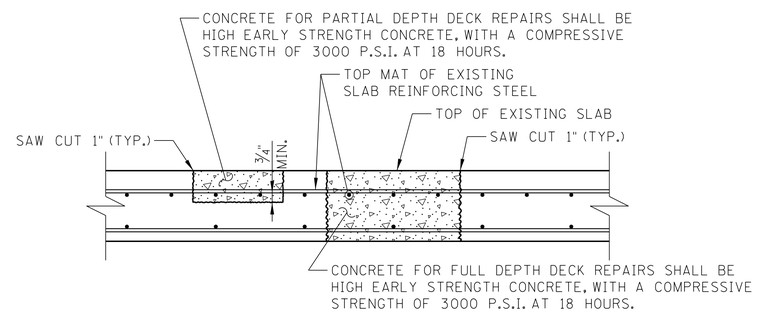

DETAIL SHOWING FULL AND PARTIAL DEPTH DECK REPAIR

REMOVE CONCRETE IN ALL DELAMINATED AREAS TO A DEPTH OF ¾" BELOW THE TOP BAR OF THE TOP MAT OF REINFORCING STEEL. ALL REINFORCING STEEL IN AREAS OF DECK REPAIR SHALL BE COMPLETELY CLEANED. AREAS OF CONCRETE REMOVAL SHALL BE DESIGNATED BY PERSONNEL FROM HEADQUARTERS, BRIDGE INSPECTION AND REPAIR OFFICE. INSPECTIONS TO DETERMINE AREAS OF DECK REPAIR SHALL BE SCHEDULED WITH THE BRIDGE REPAIR OFFICE AT LEAST THREE (3) DAYS IN ADVANCE. DECK REPAIR WILL BE PAID FOR UNDER ITEM NO. 604-10.50, BRIDGE DECK REPAIR (PARTIAL DEPTH OF SLAB), AND ITEM NO. 604-10.30, BRIDGE DECK REPAIR (FULL DEPTH OF SLAB). DURING PARTIAL DEPTH REPAIRS, SHOULD DETERIORATED CONCRETE BE ENCOUNTERED WHICH APPEARS TO RUN FULL DEPTH IN THE SLAB, THE ENGINEER MAY DESIGNATE THESE AREAS TO BE REPAIRED UNDER ITEM NO. 604-10.30. POWER DRIVEN HAND TOOLS USED FOR THE REMOVAL OF UNSOUND CONCRETE IN MAKING FULL AND PARTIAL DEPTH REPAIRS ARE SUBJECT TO THE FOLLOWING RESTRICTIONS:

1. PARTIAL DEPTH REPAIRS - PNEUMATIC HAMMERS HEAVIER THAN NOMINAL 60-POUND CLASS SHALL NOT BE USED.
2. FULL DEPTH REPAIRS - PNEUMATIC HAMMERS HEAVIER THAN A 60-POUND CLASS SHALL NOT BE USED. ALSO ALL DECK REPAIR OVER BEAMS WILL BE RESTRICTED TO 35-POUND PNEUMATIC HAMMERS.
3. CHIPPING HAMMERS OF THE 15-POUND CLASS SHALL BE USED TO REMOVE CONCRETE FROM BENEATH ANY REINFORCING STEEL.

1 ITEMS NO. 604-10.30 AND 604-10.50 MAY BE INCREASED, DECREASED, OR ELIMINATED AS DIRECTED BY THE ENGINEER.

G. SCOTT WILSON REGISTERED ENGINEER AGRICULTURE 08/13/2014 LICENSE NO. 106509 STATE OF TENNESSEE

STATE OF TENNESSEE
DEPARTMENT OF TRANSPORTATION

SUPERSTRUCTURE
BRIDGE NO. BR-32-SR32-06.97 (LEFT) ℄
BRIDGE NO. BR-32-SR32-06.98 (RIGHT)
S.R. 32 OVER S.R. 34 ℄
NORFOLK SOUTHERN RAILWAY
HAMBLEN COUNTY
2014

Palmer ENGINEERING

DESIGNED BY	G.S. WILSON	DATE	11/2011
DRAWN BY	C.D. VICTORY	DATE	11/2011
SUPERVISED BY	G.S. WILSON	DATE	11/2011
CHECKED BY	G.S. WILSON	DATE	11/2011

J:\STRUCTURES\10705-09_HAMBLENCO.SR32\DRAWINGS\FINAL\10705-09-LT-SUP.DGN 8/12/2014 12:57:18 PM