PROJECT NO.	YEAR	SHEET NO.
32003-4221-04	2014	

REVISIONS

NO.	DATE	BY	BRIEF DESCRIPTION
1	08/12/14	CDV	REVISION DATES.
2	11/06/14	CDV	REVISION DATES.

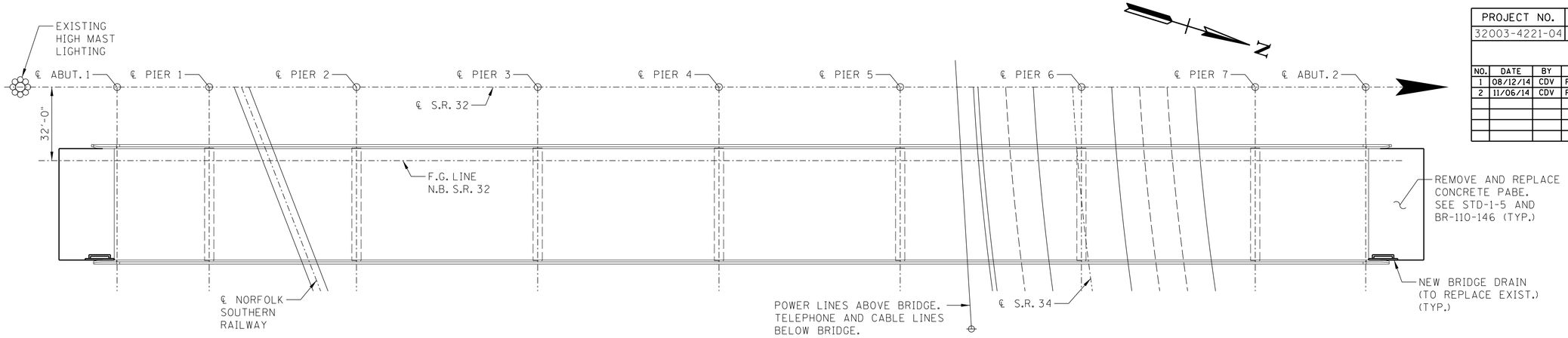

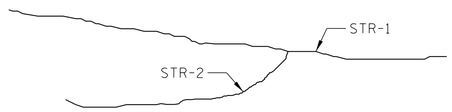

PLAN - RIGHT BRIDGE

THE CONTRACTOR SHALL USE ANY MEASURE NECESSARY TO ENSURE THAT STR-1 AND STR-2 AND THEIR BANK VEGETATION WILL NOT BE DISTURBED AND ARE PROTECTED FROM SEDIMENT AND OTHER POLLUTANTS.

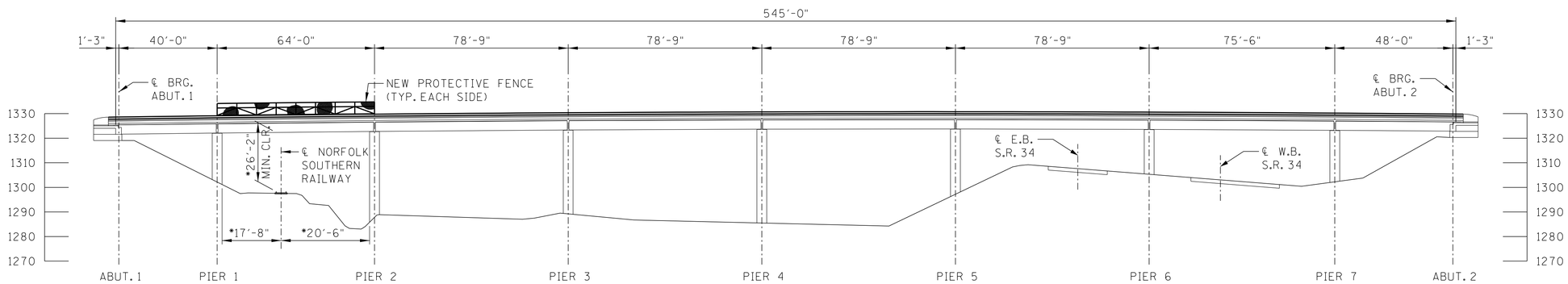

ELEVATION - RIGHT BRIDGE

* CLEARANCES OBTAINED FROM TDOT INSPECTION REPORT DATED 4/5/2010.

SCOPE OF WORK

1. PROVIDE REQUIRED TRAFFIC CONTROL AND PHASING FOR S.R. 32 AND ON S.R. 34 (BELOW) MAINTAINING AT LEAST ONE LANE OF TRAFFIC IN EACH DIRECTION.
2. REMOVE THE EXISTING ASPHALT WEARING SURFACE (5" +/-).
3. RECONSTRUCT THE CONCRETE BRIDGE DECK IN AREAS OF FULL AND PARTIAL DEPTH DECK REPAIR.
4. REMOVE AND REPLACE EXISTING CONCRETE PAVEMENT AT BRIDGE ENDS (PABE) AND BRIDGE END DRAINS. TOP OF PABE SHALL BE PLACED TO MATCH TOP OF CONCRETE DECK ALONG ORIGINAL PROFILE. CLEARING/VEGETATION REMOVAL REQUIRED TO INSTALL NEW DRAIN PIPES TO BE INCLUDED IN THIS WORK.
5. PLACE NEW 3¼" ASPHALT OVERLAY ON THE BRIDGE DECK AND PABE.
6. PROVIDE ASPHALT PAVEMENT TRANSITIONS AT ENDS OF PAVEMENT AT BRIDGE ENDS AS REQUIRED.
7. REPAIR CONCRETE APPROACH ROADWAY PAVEMENT AS REQUIRED IN ASPHALT PAVEMENT TRANSITIONS AREAS.
8. REPAIR DETERIORATED AREAS OF CONCRETE ON SUBSTRUCTURE UNITS AND PARAPETS.
9. REMOVE EXISTING ALUMINUM RAILING FROM PARAPETS.
10. PLACE NEW CONCRETE AT PARAPETS TO HEIGHT OF EXISTING END POSTS (THIS WILL REPLACE ALUMINUM RAILING).
11. INSTALL NEW PROTECTIVE FENCING ON PARAPETS OVER THE RAILROAD.
12. CONSTRUCT NEW CRASH WALL ADJACENT TO RAILROAD AT PIER 1 AND PIER 2.
13. HIGH PRESSURE WATER WASH AND TEXTURE COAT PARAPETS, DECK OVERHANGS, BOTTOM AND OUTSIDE FACES OF FASCIA BEAMS, AND ALL SUBSTRUCTURE UNITS.
14. UPDATE GUARDRAIL AT APPROACH ENDS OF BRIDGES TO INCLUDE ATTACHMENTS AT BRIDGES ENDS AND TYPE 38 END TERMINALS.

② ① LIST OF DRAWINGS

DRAWING	DRAWING NO.	LAST REV. DATE
LAYOUT OF RIGHT BRIDGE TO BE REPAIRED	BR-110-138	11/06/14
GENERAL NOTES AND ESTIMATED QUANTITIES	BR-110-139	11/06/14
SUPERSTRUCTURE	BR-110-140	08/12/14
SUPERSTRUCTURE DETAILS	BR-110-141	
FENCE DETAILS	BR-110-142	
SUBSTRUCTURE REPAIR DETAILS	BR-110-143	
CONCRETE REPAIR DETAILS	BR-110-144	
CRASHWALL DETAILS	BR-110-145	
PABE AND END DRAINS	BR-110-146	

LIST OF REFERENCE DRAWINGS

(TO BE PRINTED WITH PLANS)

M-6-102 THRU M-6-115

S.R. 32
POSTED SPEED LIMIT = 45 M.P.H.
ADT (2014) = 23,380

STATE OF TENNESSEE
DEPARTMENT OF TRANSPORTATION

LAYOUT OF RIGHT BRIDGE
TO BE REPAIRED
BRIDGE NO. 32-SR32-06.98
S.R. 32 OVER S.R. 34 ℄
NORFOLK SOUTHERN RAILWAY
HAMBLEN COUNTY
2014

G. SCOTT WILSON
REGISTERED ENGINEER
AGRICULTURE
11/07/2014
COMMISSION No. 106500
STATE OF TENNESSEE

Palmer ENGINEERING

DESIGNED BY	G.S. WILSON	DATE	11/2011
DRAWN BY	C.D. VICTORY	DATE	11/2011
SUPERVISED BY	G.S. WILSON	DATE	11/2011
CHECKED BY	G.S. WILSON	DATE	11/2011

J:\STRUCTURES\10705-09_HAMBLEN CO._SR32\DRAWINGS\FINAL\10705-09-RT-LAY.DGN 11/6/2014 8:11:27 AM