PROJECT NO.	YEAR	SHEET NO.
32003-4221-04	2014	

REVISIONS

NO.	DATE	BY	BRIEF DESCRIPTION

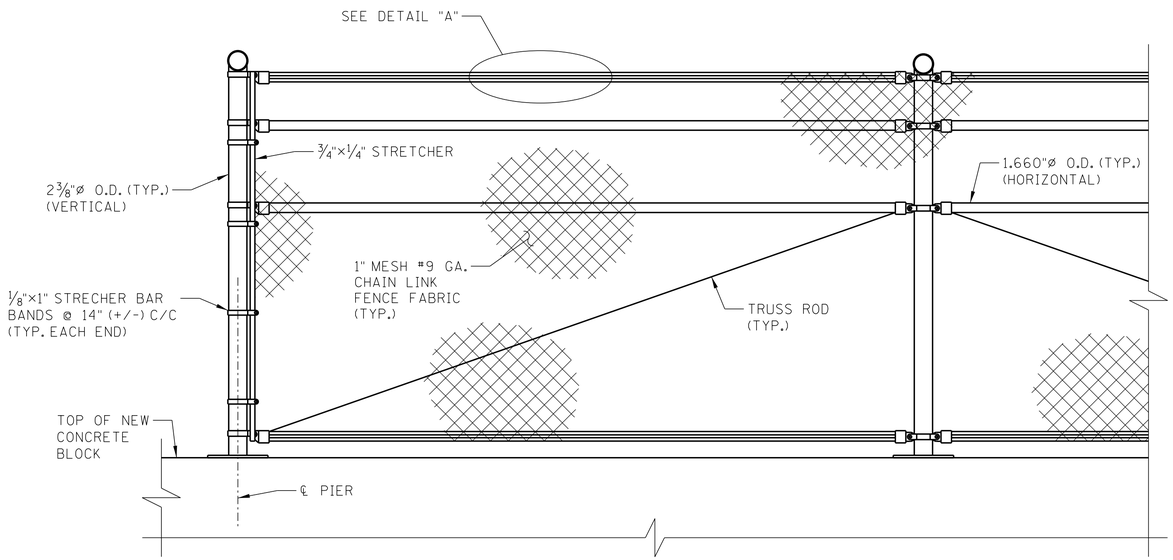

FENCING DETAIL

NOTES:

1. FOR LIMITS OF FENCING, SEE DWG. NO. BR-114-24. ALL LABOR, EQUIPMENT AND MATERIALS NECESSARY FOR THE COMPLETE INSTALLATION OF THE PROTECTIVE FENCE SHALL BE PAID FOR UNDER ITEM NO. 707-07.01, CHAIN-LINK FENCE (BRIDGES), S.F.
2. POSTS AND RAILS SHALL BE PERMANENTLY POSITIONED BEFORE FABRIC IS PLACED. INSTALL FENCE RAILS PARALLEL WITH CONCRETE PARAPETS. INSTALL FENCE POSTS PLUMB. LEVELING PADS (SHOWN IN DETAILS) OR SHIM PLATES MAY BE USED.
3. ALL PROTECTIVE FENCE MATERIALS, INCLUDING FASTENERS AND ANCHOR BOLT ASSEMBLIES, SHALL BE GALVANIZED IN ACCORDANCE WITH THE SPECIFICATIONS.
4. FENCING IS TO BE BLACK PVC COATED GALVANIZED 1" DIAMOND MESH, CHAIN LINK FABRIC, COMMERCIAL QUALITY, MEDIUM HIGH CARBON, HOT DIPPED GALVANIZED STEEL WIRE MEETING THE REQUIREMENTS OF ASTM F668-04. POSTS, RAILS, AND FRAMEWORK SHALL BE BLACK PVC COATED GALVANIZED STRUCTURAL STEEL OR SCHEDULE 40 PIPE. ALL MISCELLANEOUS CONNECTIONS, (BOLTS, WASHERS, NUTS, ETC.) FOR POSTS, RAILS, AND FRAMEWORK SHALL BE BLACK VINYL COATED GALVANIZED STEEL. PRE-COATED LONGITUDINAL RAILS, IF CUT, SHALL HAVE THE CUT END COATED WITH A TDOT APPROVED PVC TOUCH UP MATERIAL SUPPLIED BY THE MANUFACTURER PRIOR TO ERECTION. NUTS, BOLTS, AND WASHERS SHALL BE TOUCHED UP AFTER INSTALLATION. DO NOT PAINT ANY MATERIALS.
5. WIRE MESH TO BE ATTACHED TO THE TRAFFIC SIDE OF THE POSTS AND RAILS.
6. COAT ALL SURFACES IN CONTACT WITH CONCRETE WITH CAULKING COMPOUND PRIOR TO ERECTION. AFTER ERECTION AND ALIGNMENT, SEAL OPENINGS BETWEEN THE METAL SURFACES AND THE CONCRETE WITH CAULKING COMPOUND.
7. ANCHOR BOLTS SHALL BE AASHTO M314 GRADE 36 WITH MINIMUM PULLOUT STRENGTH OF 4,600 LBS.

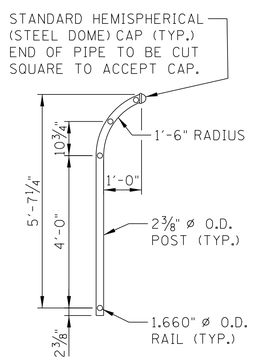

TYPICAL SECTION

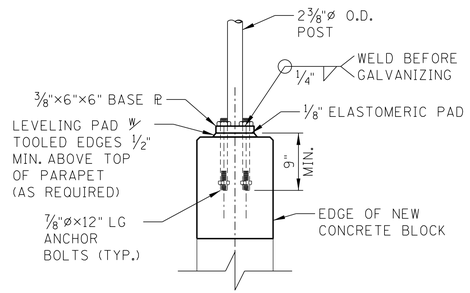

TYPICAL SECTION
BASE PLATE DETAIL

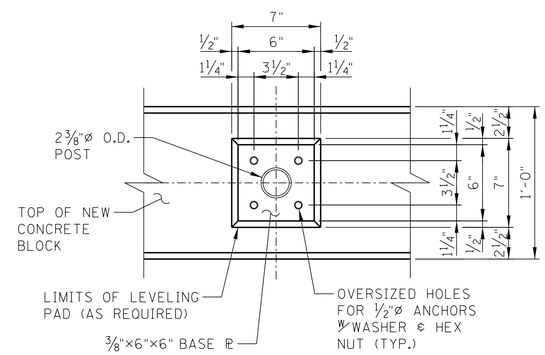

PLAN BASE PLATE DETAIL

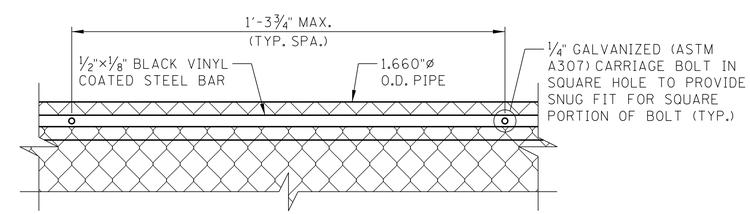

DETAIL "A"

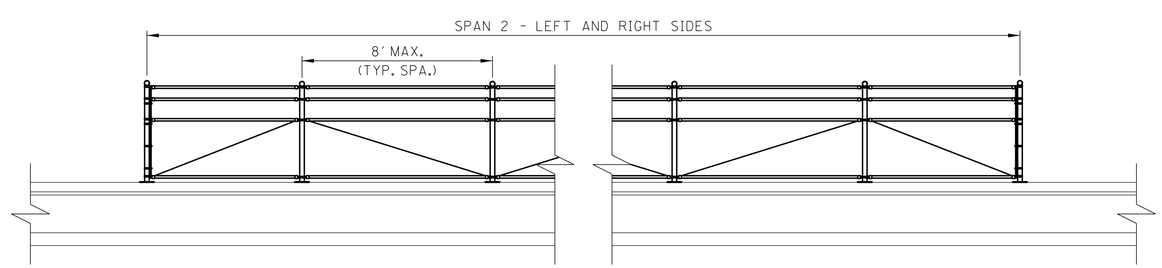

ELEVATION - SPAN 2 (LT. & RT. BRIDGES)

G. SCOTT WILSON
REGISTERED ENGINEER
NO. 106509
04/28/2014
STATE OF TENNESSEE

STATE OF TENNESSEE
DEPARTMENT OF TRANSPORTATION

FENCE DETAILS
BRIDGE NO. BR-32-SR32-06.97 (LEFT) &
BRIDGE NO. BR-32-SR32-06.98 (RIGHT)
S.R. 32 OVER S.R. 34 &
NORFOLK SOUTHERN RAILWAY
HAMBLEN COUNTY
2014

Palmer ENGINEERING

DESIGNED BY	G.S. WILSON	DATE	11/2011
DRAWN BY	C.D. VICTORY	DATE	11/2011
SUPERVISED BY	G.S. WILSON	DATE	11/2011
CHECKED BY	G.S. WILSON	DATE	11/2011

J:\STRUCTURES\10705-09_HAMBLENCO_SR32\DRAWINGS\FINAL\10705-09-FENCE.DGN

4/22/2014