PROJECT NO.	YEAR	SHEET NO.
32003-4221-04	2014	

REVISIONS

NO.	DATE	BY	BRIEF DESCRIPTION

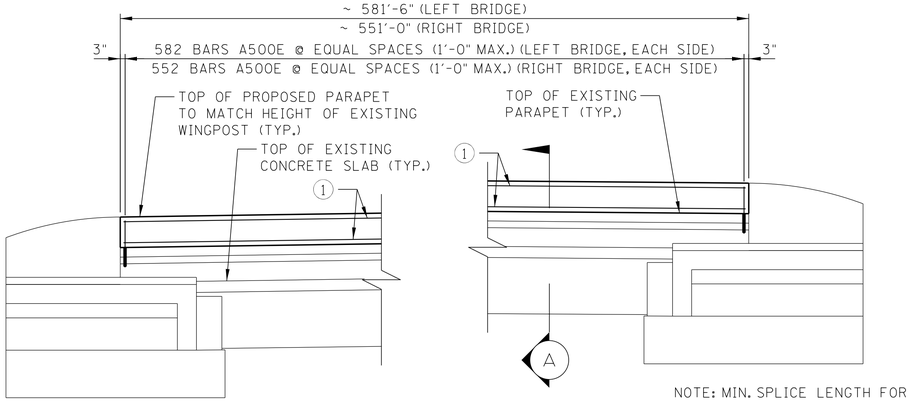

NOTE: MIN. SPLICE LENGTH FOR #5 BARS IS 2'-5".

BRIDGE RAIL MODIFICATION ELEVATION

(1) TYP. LINE OF BARS CONSISTS OF 11 BARS A501E (55'-1") (LEFT BRIDGE) OR 10 BARS A502E (57'-3") (RIGHT BRIDGE)

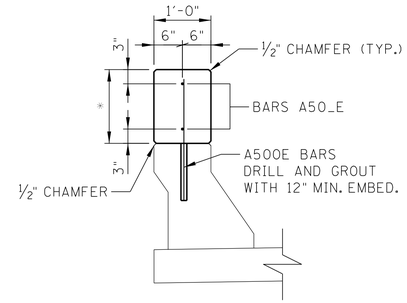

SECTION "A"

* HEIGHT OF NEW CONCRETE TO MATCH HEIGHT OF EXISTING WING POSTS. (APPROX. 1'-7¼")

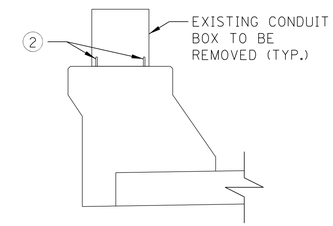

SECTION @ LIGHT STANDARD SUPPORT

(2) EXISTING LIGHT STANDARD CONDUIT BOXES AND ASSOCIATED HARDWARE SHALL BE REMOVED TO 1¼" MIN. BELOW THE EXISTING CONCRETE SURFACE AND THE VOIDS FILLED WITH AN EPOXY SEALER. ALL WORK MUST MEET WITH THE APPROVAL OF THE ENGINEER. COST TO BE INCLUDED IN THE UNIT PRICE BID FOR ITEM NO. 604-10.22, CONCRETE PARAPET REPAIR, L.F.

PARAPET MODIFICATION NOTES:

ALL COST ASSOCIATED WITH MODIFICATION OF EXISTING BRIDGE RAIL INCLUDING REMOVING THE EXISTING RAILING AND POSTS, STEEL REINFORCEMENT, HIGH EARLY STRENGTH CONCRETE, FORMING, LABOR, AND ALL MISCELLANEOUS MATERIAL NECESSARY TO COMPLETE THE REPAIRS AS SHOWN SHALL BE INCLUDED IN THE UNIT PRICE BID FOR ITEM NO. 604-10.22, CONCRETE PARAPET REPAIR, L.F.

CONTRACTOR SHALL FIELD MEASURE DIMENSIONS OF BRIDGE RAIL PRIOR TO BEGINNING WORK AND ORDERING REINFORCING STEEL.

BILL OF STEEL

BAR	SIZE	NO. REQ'D	LENGTH
A500E	5	2268	2'-5"
A501E	5	44	55'-1"
A502E	5	40	57'-3"

NOTE: THE SUFFIX "E", FOR BARS SO MARKED, DENOTES EPOXY COATED REINFORCEMENT.

BARS A

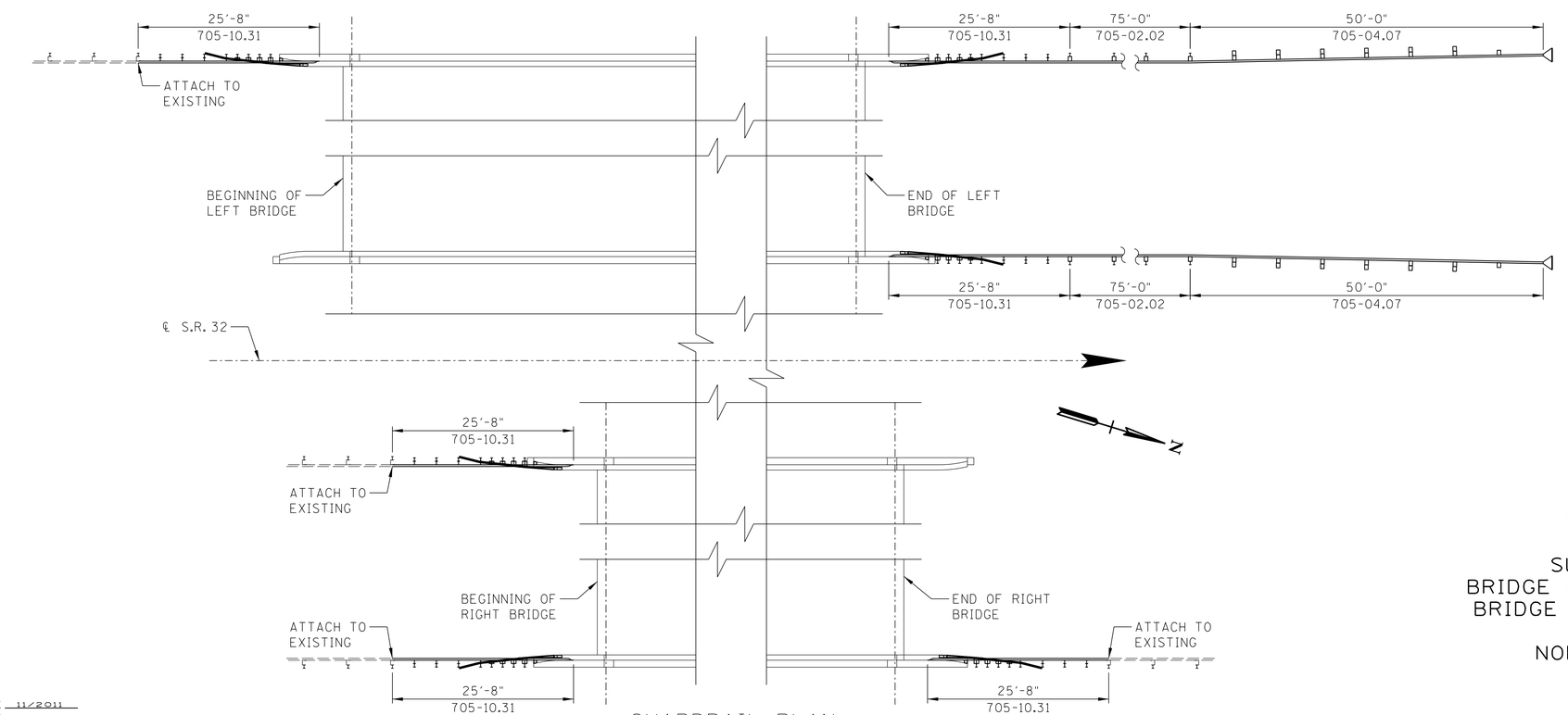

GUARDRAIL PLAN

STATE OF TENNESSEE
DEPARTMENT OF TRANSPORTATION

SUPERSTRUCTURE DETAILS
BRIDGE NO. BR-32-SR32-06.97 (LEFT) ℄
BRIDGE NO. BR-32-SR32-06.98 (RIGHT)
S.R. 32 OVER S.R. 34 ℄
NORFOLK SOUTHERN RAILWAY
HAMBLEN COUNTY
2014

Palmer ENGINEERING

DESIGNED BY	G.S. WILSON	DATE	11/2011
DRAWN BY	C.D. VICTORY	DATE	11/2011
SUPERVISED BY	G.S. WILSON	DATE	11/2011
CHECKED BY	G.S. WILSON	DATE	11/2011

J:\STRUCTURES\10705-09_HAMBLENCO_SR32\DRAWINGS\FINAL\10705-09-SUPDTL.DGN

4/22/2014