Index Of Sheets

SHEET NO.	DESCRIPTION
1	TITLE SHEET TYPICAL SECTIONS PROPERTY MAPS AND RIGHT-OF-WAY ACQUISITION TABLE PRESENT LAYOUT R.O.W. DETAILS
4-12	PROPOSED LAYOUTS
13-14	PROFILES PROFILE OF PRIVATE DRIVES CULVERT CROSS-SECTIONS PROPOSED SIGNAL LAYOUT PROPOSED F.O. INTERCONNECT LAYOUT EROSION PREVENTION AND SEDIMENT CONTROL PLAN ROADWAY CROSS-SECTIONS
15-17	WATER DETAILS

STATE OF TENNESSEE
DEPARTMENT OF TRANSPORTATION
BUREAU OF ENGINEERING

DICKSON COUNTY

STATE ROUTE 46 UTILITY RELOCATION
FROM I-40 TO SR-1 (US-70, HENSLEE DRIVE), INCLUDING THE INTERSECTION OF SR-1 AT SR-1 (EAST COLLEGE STREET)

UTILITY RELOCATION

STATE HIGHWAY NO. 46 F.A.H.S. NO. NA

TENN.	YEAR	SHEET NO.
	2014	U4-1
FED. AID PROJ. NO.	STP-46(21)	
STATE PROJ. NO.	22004-3246-14	

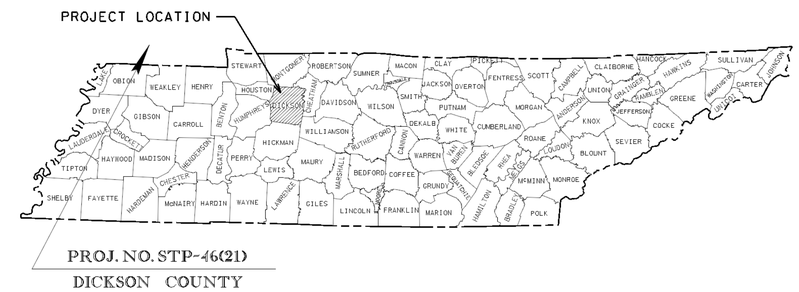

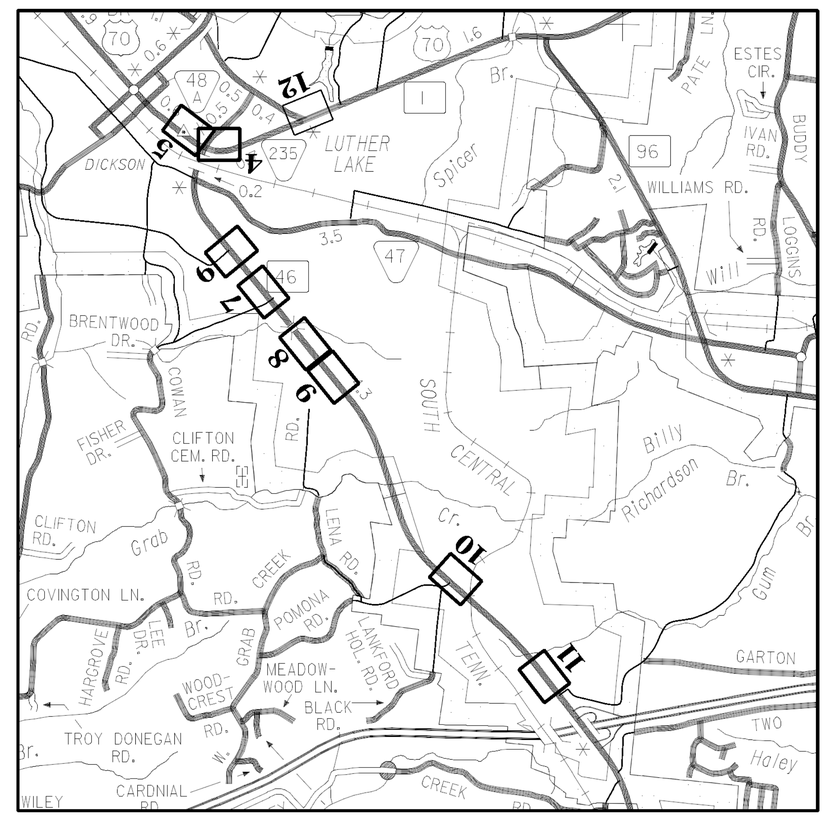

WATER PLANS

SEALED BY

MICHAEL W. ROGERS REGISTERED ENGINEER DEPARTMENT OF TRANSPORTATION No. 115445 STATE OF TENNESSEE

8/15/14

APPROVED: Paul D. Degges
PAUL D. DEGGES, CHIEF ENGINEER

DATE:

APPROVED:
JOHN SCHROER, COMMISSIONER

SPECIAL NOTES

PROPOSALS MAY BE REJECTED BY THE COMMISSIONER IF ANY OF THE UNIT PRICES CONTAINED THEREIN ARE OBVIOUSLY UNBALANCED, EITHER EXCESSIVE OR BELOW THE REASONABLE COST ANALYSIS VALUE.

THIS PROJECT TO BE CONSTRUCTED UNDER THE STANDARD SPECIFICATIONS OF THE TENNESSEE DEPARTMENT OF TRANSPORTATION DATED FEBRUARY 4, 2014 AND ADDITIONAL SPECIFICATIONS AND SPECIAL PROVISIONS CONTAINED IN THE PLANS AND IN THE PROPOSAL CONTRACT.

DIRECTOR OF PROJECT DEVELOPMENT _____

DESIGNED BY _____

DESIGNER _____ CHECKED BY _____

P.E. NO. _____

PIN NO. _____

ICA Engineering
2550 Irvin Cobb Drive
Paducah, KY 42003
270.444.9691
www.icaeng.com

U.S. DEPARTMENT OF TRANSPORTATION
FEDERAL HIGHWAY ADMINISTRATION

APPROVED:

DIVISION ADMINISTRATOR DATE

E:_2014 JOBS\14077 Dickson County\Dwgs\WATER\W001.SHT

TYPE	YEAR	PROJECT NO.	SHEET NO.
CONST.	2014	22004-3246-14	U4-2

GENERAL NOTES:

1 CONDUCT ALL CONSTRUCTION ACTIVITIES IN ACCORDANCE WITH APPLICABLE O.S.H.A. REGULATIONS AND OTHER PREVAILING HEALTH & SAFETY STANDARDS.

2 PROVIDE ALL MISCELLANEOUS ITEMS, NOT LISTED BUT REQUIRED FOR CONSTRUCTION, AT NO ADDITIONAL COST TO THE OWNER.

3 VERIFY ALL TENNESSEE DEPARTMENT OF TRANSPORTATION, COUNTY, OR CITY ENCROACHMENT PERMITS REQUIRED FOR THIS PROJECT HAVE BEEN OBTAINED. POST ALL PERMITS ON THE CONSTRUCTION SITE.

4 IMPLEMENT TRAFFIC CONTROL MEASURES IN ACCORDANCE WITH THE APPLICABLE STANDARDS AND REGULATIONS INCLUDING, BUT NOT LIMITED TO, "THE TENNESSEE MANUAL ON UNIFORM TRAFFIC CONTROL DEVICES FOR STREETS AND HIGHWAYS", WHEN ANY OPERATION ADVERSELY AFFECTS TRAFFIC CONTROL. DEPLOY PROPER LIGHTING, BARRICADING, AND FLAGMEN. FURNISH, ERECT AND MAINTAIN TRAFFIC CONTROL DEVICES AT NO ADDITIONAL COST TO THE OWNER.

5 ALL UTILITIES ARE SHOWN IN THEIR GENERAL LOCATION. PRIOR TO INITIATING CONSTRUCTION, FIELD LOCATE ALL UTILITIES. EXPOSE UTILITIES LOCATED WITHIN THE DISTURBED LIMITS UTILIZING MANUAL EXCAVATION WHERE NEEDED TO AVOID DAMAGE TO THE UTILITY. NOTIFY THE ENGINEER OF CONFLICTS WHICH MAY AFFECT PROPER COMPLETION OF THE WORK. TAKE MEASURES TO PROTECT THE UTILITIES FROM DAMAGE DURING CONSTRUCTION. COORDINATE REPAIRS OF DAMAGED UTILITIES WITH THE OWNERS. THE CONTRACTOR SHALL BE RESPONSIBLE FOR ALL COSTS ASSOCIATED WITH REQUIRED REPAIR OR REPLACEMENT.

6 IMPLEMENT MEASURES TO PROTECT PROPERTY AND SURVEY MONUMENTS. REPLACE ALL SURVEY MONUMENTS, PROPERTY CORNERS, ETC. DISTURBED BY CONSTRUCTION. ALL PROPERTY CORNERS MUST BE REPLACED BY A PROFESSIONAL SURVEYOR LICENSED TO PRACTICE SURVEYING IN TENNESSEE.

7 RESTORE ALL SOIL AREAS DISTURBED AS A RESULT OF ANY CONSTRUCTION PROCESS TO A CONDITION EQUAL TO OR EXCEEDING PRE-CONSTRUCTION CONDITIONS.

8 FILL DRIVEWAY EXCAVATIONS TO GRADE WITH A TRAFFIC BEARING SURFACE WITHIN 24 HOURS OF EXCAVATION. COORDINATE ACTIVITIES WITH PROPERTY OWNER.

9 RESTORE ROADWAYS AND DRIVEWAYS DAMAGED BY EXCAVATION OR OTHER CONSTRUCTION OPERATIONS TO A CONDITION EQUAL TO OR EXCEEDING PRE-CONSTRUCTION CONDITIONS.

10 DO NOT STORE EXCAVATED MATERIAL IN LOCATIONS THAT BLOCK THE EXISTING STORM DRAINAGE.

11 RESHAPE ALL DITCH LINES DAMAGED DURING CONSTRUCTION TO ORIGINAL LINES AND GRADES OR AS NOTED ON THE GRADING PLAN.

12 REPLACE ALL DRAINAGE PIPES DISTURBED DURING CONSTRUCTION IN-KIND AT NO ADDITIONAL COST TO THE OWNER, UNLESS OTHERWISE SHOWN ON THE DRAWINGS.

13 MAINTAIN A MINIMUM 10 FEET HORIZONTAL OR AN 18 INCH VERTICAL SEPARATION BETWEEN WATER AND SANITARY SEWER LINES.

14 REPAIR ANY FENCE, OR PORTION THEREOF, DISTURBED DURING CONSTRUCTION TO A CONDITION EQUAL TO OR EXCEEDING THE PRE-CONSTRUCTION CONDITION.

15 CONDUCT CLEARING, GRUBBING AND CONSTRUCTION ACTIVITIES IN A MANNER MINIMIZING, TO THE EXTENT PRACTICAL, THE DESTRUCTION OF TREES, SHRUBBERY, ETC. THAT MAY BE IN THE PATH OF THE PROPOSED UTILITY.

16 REMOVE ALL DEBRIS, EXCESS MATERIALS, ETC. FROM THE PROJECT SITE AND DISPOSE OF AT AN APPROVED LOCATION AT NO ADDITIONAL COST TO THE OWNER. NO OPEN BURNING WILL BE PERMITTED ON THE SITE.

17 MAINTAIN A CLEAN AND ORDERLY JOB SITE AT ALL TIMES.

18 WITHOUT REGARD TO THE MATERIALS ENCOUNTERED, ALL EXCAVATION ON THIS PROJECT SHALL BE UNCLASSIFIED. ANY REFERENCE TO ROCK, EARTH, OR ANY OTHER MATERIAL ON THE PLAN WHETHER IN NUMBERS, WORDS, LETTERS, OR LINES IS FOR INFORMATION ONLY AND IS NOT TO BE TAKEN AS AN INDICATION OF CLASSIFIED EXCAVATION. UNAUTHORIZED EXCAVATION SHALL BE BACKFILLED AT THE CONTRACTORS EXPENSE WITH COMPACTED EARTH, GRAVEL, OR OTHER MATERIAL AS APPROVED AND DIRECTED BY THE ENGINEER. ANY UNSUITABLE MATERIAL ENCOUNTERED SHALL BE WASTED.

19 "SEED AND PROTECT" ALL DISTURBED AREAS OUTSIDE OF THE T.D.O.T. RIGHT OF WAY IN ACCORDANCE WITH THE T.D.O.T. STANDARD SPECIFICATIONS.

20 WORK HOURS SHALL BE LIMITED TO MONDAY THRU FRIDAY - 6:00 A.M. TO 6:00 P.M. - UNLESS REQUESTED BY THE CONTRACTOR AND APPROVED IN WRITING BY THE OWNER.

21 WORKING ON SITE DURING FEDERALLY OBSERVED HOLIDAYS IS PROHIBITED UNLESS REQUESTED BY THE CONTRACTOR AND APPROVED IN WRITING BY THE OWNER.

22 ALL MATERIALS AND CONSTRUCTION PERFORMANCE SHALL BE ACCORDING TO THE WATER AUTHORITY OF DICKSON Co. (W.A.D.C.) STANDARD SPECIFICATIONS AND PROCEDURES.

23 ALL HYDRANTS SHALL BE INSTALLED ON HYDRANT ANCHORING TEES.

24 ALL HYDRANTS SHALL BE INSTALLED ON SIDE LOT LINES AS NEAR AS POSSIBLE TO FRONT PROPERTY LINES.

25 W.A.D.C. SHALL PRIOR APPROVE THE CONTRACTOR.

26 W.A.D.C. SHALL WITNESS ALL PRESSURE TESTS AND APPROVE COLIFORM SAMPLES TESTED IN W.A.D.C. LABORATORY PRIOR TO ANY CONNECTIONS TO POTABLE MAINS.

27 ALL THRUST BLOCKING SHALL BE THE RESPONSIBILITY OF THE CONTRACTOR.

28 TAP OF W.A.D.C. MAIN SHALL BE MADE BY AUTHORIZED WATER PERSONNEL ONLY AFTER ALL TEST HAVE BEEN MADE AND APPROVED BY W.A.D.C.

29 COORDINATE AND SCHEDULE ALL WATER LINE CAPPING WITH W.A.D.C.

30 THRUST RESTRAINT GLANDS SHALL BE USED FOR ALL MECHANICAL JOINT FITTINGS.

31 RETURN ALL SALVAGEABLE MATERIALS (I.E. HYDRANTS, VALVES, ETC.) TO W.A.D.C. YARD UPON REMOVAL.

32 ALL MECHANICAL JOINT FITTINGS TO BE INSTALLED WITH A JOINT RESTRAINT GLAND AND TORQUE NUT.

33 PROPOSED PIPING IS SHOWN IN ITS GENERAL LOCATION. COORDINATE WITH THE ENGINEER ANY MINOR ADJUSTMENTS OF THE LOCATION AND GRADE NECESSARY TO INTEGRATE ALL PROPOSED PIPING WITH EXISTING PIPING.

34 W.A.D.C. MAY REQUIRE WATER LINE SHUT DOWNS FOR TIE-INS AND/OR CUT & CAP OPERATIONS TO BE PERFORMED AT NIGHT BETWEEN THE HOURS OF 10:00p.m. AND 5:00a.m. ANY ADDITIONAL COST FOR THIS WORK WILL BE INCIDENTAL TO THE PROJECT.

35 CONDUCT ALL PRESSURE TEST ACTIVITIES BETWEEN 7:30a.m. AND 1:30p.m. (MONDAY THRU FRIDAY). SCHEDULE TESTS WITH THE W.A.D.C. A MINIMUM OF TWO DAYS ADVANCE NOTICE.

36 MAINTAIN ACCURATE AS-BUILT RECORDS INCLUDING THE LOCATION AND DEPTH OF MAINS REFERENCED TO THE CENTERLINE OF ADJACENT ROADWAYS AT 100 FT. INTERVALS AND AT ALL CHANGES IN DIRECTION. ALL VALVES SHALL BE FIELD REFERENCED TO AT LEAST THREE PERMANENT POINTS. AS-BUILT RECORDS SHALL BE SUBMITTED TO AND APPROVED BY THE ENGINEER PRIOR TO CERTIFICATION OF COMPLETION.

37 THE QUANTITY FOR DI FITTINGS INCLUDE FITTINGS, GLANDS AND RESTRAINT DEVICES DESCRIBED IN POUNDS.

38 THE UNIT PRICE FOR RELOCATE/RECONNECT SERVICE ASSEMBLY SHALL INCLUDE ALL MATERIALS, LABOR, AND EQUIPMENT FOR REMOVAL OF EXISTING WATER SERVICE METER ASSEMBLY AND INSTALLING AT NEWLY IDENTIFIED LOCATION.

39 THE UNIT PRICE FOR RESTORE ASPHALT, CLASS A CONCRETE, AND CLASS B CONCRETE, SHALL INCLUDE ALL MATERIALS, LABOR AND EQUIPMENT, SETUP AND TRAFFIC CONTROL FOR COMPLETE INSTALLATION.

40 THE UNIT PRICE FOR DIP RESTRAINED JOINT AND SLIP JOINT WATER LINE, AND COPPER SERVICE PIPE SHALL INCLUDE ALL MATERIALS, LABOR, EQUIPMENT FOR COMPLETE INSTALLATION OF PIPE INCLUDING, BUT NOT LIMITED TO, TRAFFIC CONTROL, MATERIALS, EQUIPMENT, EXCAVATION IN BOTH UNCONSOLIDATED AND ROCK, REMOVAL AND REPLACEMENT OF UNSTABLE SOIL, ENVELOPE/BEDDING MATERIAL, BACKFILLING, FLOWABLE FILL, THRUST BLOCKING, CONCRETE DEADMAN, PIPE FUSION, TRACER WIRE, WARNING TAPE, APPURTENANCES, TEMPORAY/PERMANENT SHORING, MAINTAINING THE TRENCH, TESTING FLUSHING, DISINFECTION, BACTERIOLOGICAL SAMPLING, TEMPORARY/PERMANENT SURFACE RESTORATION, AND ANY OTHER LABOR OR MATERIAL REQUIRED TO COMPLETE THE WORK AS SPECIFIED ON THE PLANS.

41 THE UNIT PRICES FOR 18 in AND 20 in STEEL CASING PIPE OPEN CUT METHODS AND BORE/JACK STEEL CASING PIPE SHALL INCLUDE, BUT NOT BE LIMITED TO, CASING PIPE, PIPE SPACERS, CASING END SEALS, FITTINGS, TRACER WIRE, WARNING TAPE, UTILITY LINE MARKERS AND TRAFFIC CONTROL. IF CASING PIPE HAS CARRIER PIPE, THE CARRIER PIPE SHALL BE PAID AT THE OPEN CUT ITEM.

42 THE UNIT PRICES FOR CONNECTING TO EXISTING WATER LINE SHALL INCLUDE ALL MATERIALS, LABOR, AND EQUIPMENT NECESSARY FOR CONNECTING TO AN EXISTING WATER LINE AS SPECIFIED ON PLANS, INCLUDING TRAFFIC CONTROL.

43 THE UNIT PRICE FOR TAPPING SLEEVES AND VALVES SHALL INCLUDE ALL MATERIALS, LABOR AND EQUIPMENT, INCLUDING, BUT NOT LIMITED TO, TAPPING SLEEVE, VALVE, VALVE BOX, BOX ADJUSTMENT, VALVE BOX COLLAR, VALVE MARKER, EXCAVATION, BEDDING, BACKFILL, BLOCKING AND RESTRAINT, TAP OF EXISTING LINE, AND TRAFFIC CONTROL.

44 THE UNIT PRICE FOR GATE VALVES AND FIRE HYDRANT ASSEMBLIES SHALL INCLUDE ALL MATERIALS, LABOR AND EQUIPMENT, INCLUDING, BUT NOT LIMITED TO, FITTING, VALVE, VALVE STEM EXTENSION, VALVE BOX AND COVER, BOX ADJUSTMENT, VALVE BOX COLLAR, VALVE MARKER, EXCAVATION, BEDDING, BACKFILL, BLOCKING AS PROVIDED ON THE DETAIL SHEET, AND TRAFFIC CONTROL.

45 THE UNIT PRICE FOR WATER SERVICE METER ASSEMBLY SHALL INCLUDE ALL MATERIALS, LABOR AND EQUIPMENT, INCLIUDING, BUT NOT LIMITED TO, MACHINERY, TOOLS OR APPARATUS NECESSARY FOR INSTALLATION OF ASSEMBLIES AS DESCRIBED IN THE PLANS AND SPECS. EXCEPT FOR SERVICE LINE WHICH IS PAID SEPARATELY FOR EACH FOOT INSTALLED.

46 THE UNIT PRICE FOR COPPER SERVICE PIPE SHALL INCLUDE ALL MATERIALS, LABOR AND EQUIPMENT, FOR COMPLETE INSTALLATION OF SERVICE LINE AND CASING FOR SERVICE LINE ON LONG SIDE AND SHORT SIDE OF THE MAIN.

47 THE UNIT PRICE FOR REMOVE FIRE HYDRANT SHALL INCLUDE ALL MATERIALS, LABOR AND EQUIPMENT FOR REMOVAL OF ITEM.

LEGEND:

Symbol	Description
8" SA	PROP. SANITARY SEWER
10" FMS	PROP. FORCE MAIN
12" W	PROP. WATER LINE
2" G	PROP. GAS LINE
18" ST	PROP. STORM DRAINAGE
8" SA	EXIST. SANITARY SEWER
10" FMS	EXIST. FORCE MAIN
8" W	EXIST. WATER LINE
2" G	EXIST. GAS LINE

PROP. M.H. A-13
STA. 29+04.18

EXIST. M.H. A-14
STA. 30+92.21

PROP. STORM INLET

WATER PLANS

SEALED BY

MICHAEL W. ROGERS
REGISTERED ENGINEER
AGRICULTURE COMMERCE
No. 115445
STATE OF TENNESSEE
8/15/14

COORDINATES ARE NAD/83(1995), ARE DATUM ADJUSTED BY THE FACTOR OF 1.000083 AND TIED TO THE TGRN. ALL ELEVATIONS ARE REFERENCED TO THE NAVD 1988.

STATE OF TENNESSEE
DEPARTMENT OF TRANSPORTATION

ICA Engineering
2550 Irvin Cobb Drive
Paducah, KY 42003
270.444.9691
www.icaeng.com

WATER NOTES

NTS

8/18/2014 12:55:29 PM
E:_2014 JOBS\14077 Dickson County\Dwgs\WATER\W002 Notes.SHT

TYPE	YEAR	PROJECT NO.	SHEET NO.
CONST.	2014	22004-3246-14	U4-3

SUMMARY OF QUANTITIES

TDOT ITEM #	DESCRIPTION	UNIT	U4-4	U4-5	U4-6	U4-7	U4-8	U4-9	U4-10	U4-11	U4-12	TOTAL
	MATERIAL AND INSTALLATION BY THE CONTRACTOR											
795-01.03	6 IN DIP RESTRAINED JOINT WATER LINE	L.F.		135							120	255
795-01.04	6 IN DIP SLIP JOINT WATER LINE	L.F.	6			4				432	72	514
795-01.05	8 IN DIP RESTRAINED JOINT WATER LINE	L.F.		185			372					557
795-01.06	8 IN DIP SLIP JOINT WATER LINE	L.F.			332							332
795-01.07	10 IN DIP RESTRAINED JOINT WATER LINE	L.F.	122					123	125			370
795-01.08	10 IN DIP SLIP JOINT WATER LINE	L.F.	12					100	69			181
795-01.09	12 IN DIP RESTRAINED JOINT WATER LINE	L.F.	160		86	65						311
795-01.10	12 IN DIP SLIP JOINT WATER LINE	L.F.	603	196	14	88						901
795-05.63	BORE/JACK 12 IN STEEL CASING PIPE-UNCON.	L.F.									95	95
795-05.66	BORE/JACK 18 IN STEEL CASING PIPE-UNCON.	L.F.	95						100			195
795-05.67	BORE/JACK 20 IN STEEL CASING PIPE-UNCON.	L.F.	120		70							190
795-15.04	18 IN STEEL CASING PIPE OPEN CUT METHOD	L.F.						90				90
795-15.05	20 IN STEEL CASING PIPE OPEN CUT METHOD	L.F.				45						45
795-07.03	6 IN X 6 IN TAPPING SLEEVE AND VALVE	EACH	1			1				1	1	4
795-07.05	8 IN X 6 IN TAPPING SLEEVE AND VALVE	EACH									1	1
795-07.06	8 IN X 8 IN TAPPING SLEEVE AND VALVE	EACH		1	1		2					4
795-07.08	10 IN X 6 IN TAPPING SLEEVE AND VALVE	EACH								1		1
795-07.10	10 IN X 10 IN TAPPING SLEEVE AND VALVE	EACH	1					2	2			5
795-07.15	12 IN X 12 IN TAPPING SLEEVE AND VALVE	EACH	1		2	2						5
795-08.09	12 IN GATE VALVE ASSEMBLY	EACH	3	1								4
795-09.01	3/4 IN WATER SERVICE METER ASSEMBLY	EACH	1	6	5							12
795-09.09	RELOCATE/RECONNECT SERVICE ASSEMBLY	EACH	1	7	5	1						14
795-09.28	3/4 IN COPPER SERVICE PIPE	L.F.	6	175	20							201
797-09.28	3/4 IN COPPER SERVICE PIPE (BORE)	L.F.			150	75						225
795-11.02	FIRE HYDRANT ASSEMBLY	EACH	1	1	1				1	1	1	6
795-12.01	REMOVE FIRE HYDRANT	EACH	1	1					1	1	1	5
795-13.01	DI FITTINGS	LBS	2497	1163	1493	1570	341	940	591	275	298	9,168
795-06.04	CONNECT TO 6IN WATER LINE	EACH				1				1	1	3
795-06.05	CONNECT TO 8IN WATER LINE	EACH		1			1					2
795-06.06	CONNECT TO 10IN WATER LINE	EACH						2	1	1		4
795-06.07	CONNECT TO 12IN WATER LINE	EACH	1			2						3
795-14.01	CLASS A CONCRETE ROADWAY CAP (8 IN TH - 3500 PSI)	C.Y.	33									33
795-14.02	CLASS B CONCRETE THRUST BLOCKING - 2500 PSI	C.Y.	12.6	5.1	9.2	11.9	2.3	6.9	4.9	2.3	1.7	57
795-14.08	RESTORE ASPHALT	S.Y.	32	263	41	16				61		413

WATER PLANS

SEALED BY

MICHAEL W. ROGERS REGISTERED ENGINEER AGRICULTURE COMMERCE No. 115449 STATE OF TENNESSEE

8/18/14

COORDINATES ARE NAD/83(1995), ARE DATUM ADJUSTED BY THE FACTOR OF 1.000083 AND TIED TO THE TGRN. ALL ELEVATIONS ARE REFERENCED TO THE NAVD 1988.

STATE OF TENNESSEE
DEPARTMENT OF TRANSPORTATION

WATER QUANTITIES

NTS

ICA Engineering
2550 Irvin Cobb Drive
Paducah, KY 42003
270.444.9691
www.icaeng.com

8/18/2014 12:58:09 PM
E:_2014 JOBS\14077 Dickson County\Dwgs\WATER\W003 Quantities.SHT

TYPE	YEAR	PROJECT NO.	SHEET NO.
CONST.	2014	22004-3246-14	U4-4

CONTROL POINTS

POINT	NORTH	EAST	ELEV.	STATION	OFFSET	DESCRIPTION
S5	635723.7001	1560845.8114	780.673	400+46.79	42.61	ALUM DISK
S6	636098.8606	1561134.8005	780.185	398+71.72	495.19	ALUM DISK
S7	635543.0891	1561622.2140	808.057	392+41.49	-37.73	ALUM DISK

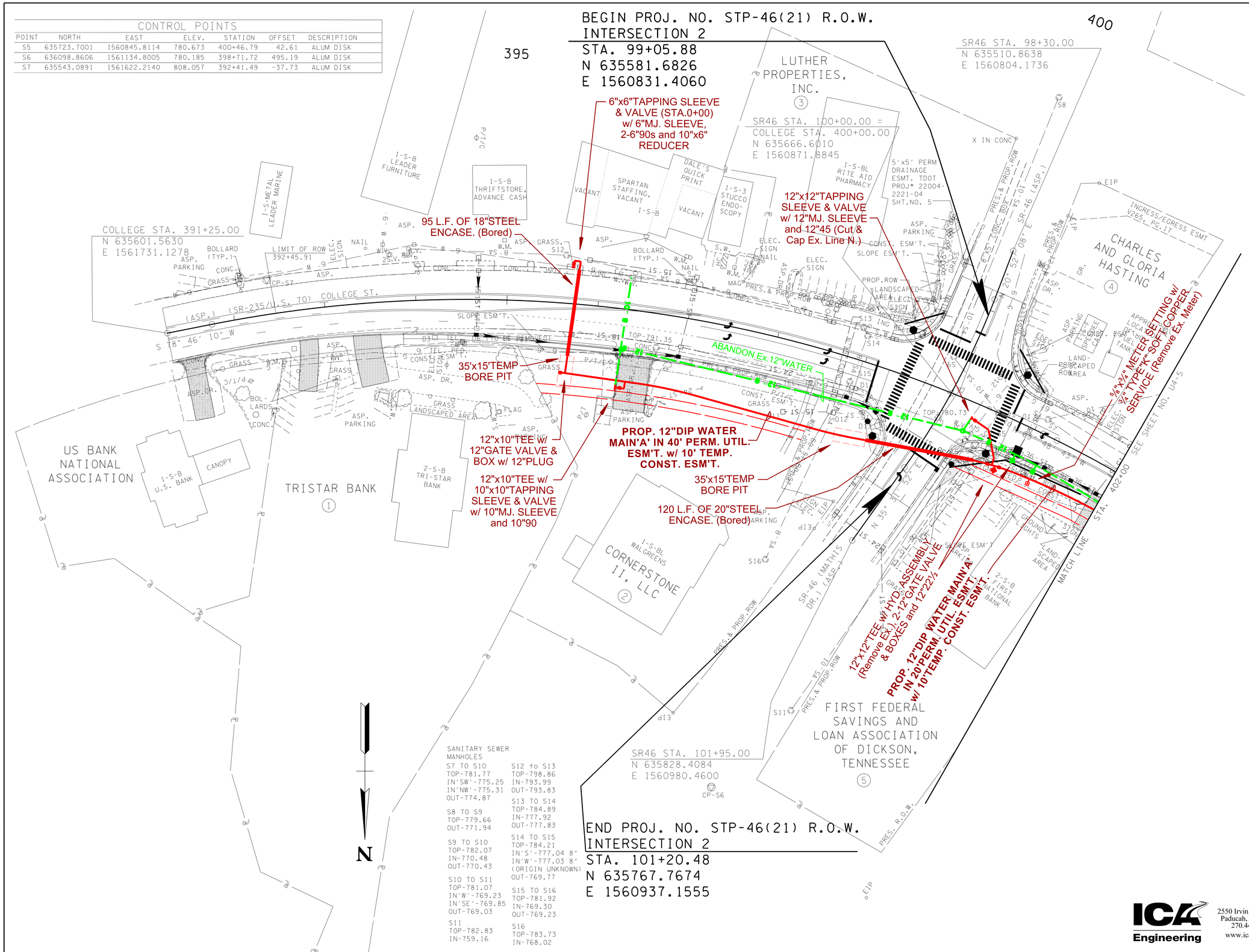

SANITARY SEWER MANHOLES

S7 TO S10
TOP-781.77
IN'SW'-775.25
IN'NW'-775.31
OUT-774.87

S8 TO S9
TOP-779.66
OUT-771.94

S9 TO S10
TOP-782.07
IN-770.48
OUT-770.43

S10 TO S11
TOP-781.07
IN'W'-769.23
IN'SE'-769.85
OUT-769.03

S11
TOP-782.83
IN-759.16

S12 to S13
TOP-798.86
IN-793.99
OUT-793.83

S13 TO S14
TOP-784.89
IN-777.92
OUT-777.83

S14 TO S15
TOP-784.21
IN'S'-777.04 8"
IN'W'-777.03 8"
(ORIGIN UNKNOWN)
OUT-769.77

S15 TO S16
TOP-781.92
IN-769.30
OUT-769.23

S16
TOP-783.73
IN-768.02

END PROJ. NO. STP-46(21) R.O.W.
INTERSECTION 2
STA. 101+20.48
N 635767.7674
E 1560937.1555

WATER PLANS

SEALED BY

MICHAEL W. ROGERS REGISTERED ENGINEER AGRICULTURE & COMMERCE NO. 115449 STATE OF TENNESSEE
8/13/14

COORDINATES ARE NAD/83(1995), ARE DATUM ADJUSTED BY THE FACTOR OF 1.000083 AND TIED TO THE TGRN. ALL ELEVATIONS ARE REFERENCED TO THE NAVD 1988.

STATE OF TENNESSEE
DEPARTMENT OF TRANSPORTATION

PRESENT LAYOUT
INTERSECTION NO. 2
STA.391+25 TO STA.402+00
SCALE: 1"= 50'

ICA Engineering
2550 Irvin Cobb Drive
Paducah, KY 42003
270.444.9691
www.icaeng.com

10/6/2014 2:22:00 PM
E:_2014 JOBS\14077 Dickson County\Dwgs\WATER COLOR\W004 C.SHT

TYPE	YEAR	PROJECT NO.	SHEET NO.
CONST.	2014	22004-3246-14	U4-5

SANITARY SEWER MANHOLES

S1 TO S2
TOP-810.81
OUT-804.75

S2 TO S3
TOP-807.79
IN-803.48
OUT-803.48

S3 TO S5
TOP-807.47
IN'NW'-802.02
IN'NE'-802.06
OUT-801.99

S4 TO S5
TOP-802.01
OUT-796.89

S5 TO S7
TOP-794.44
IN'NW'-790.24
IN'NE'-790.34
OUT-790.19

S6 TO S7
TOP-785.41
OUT-776.61

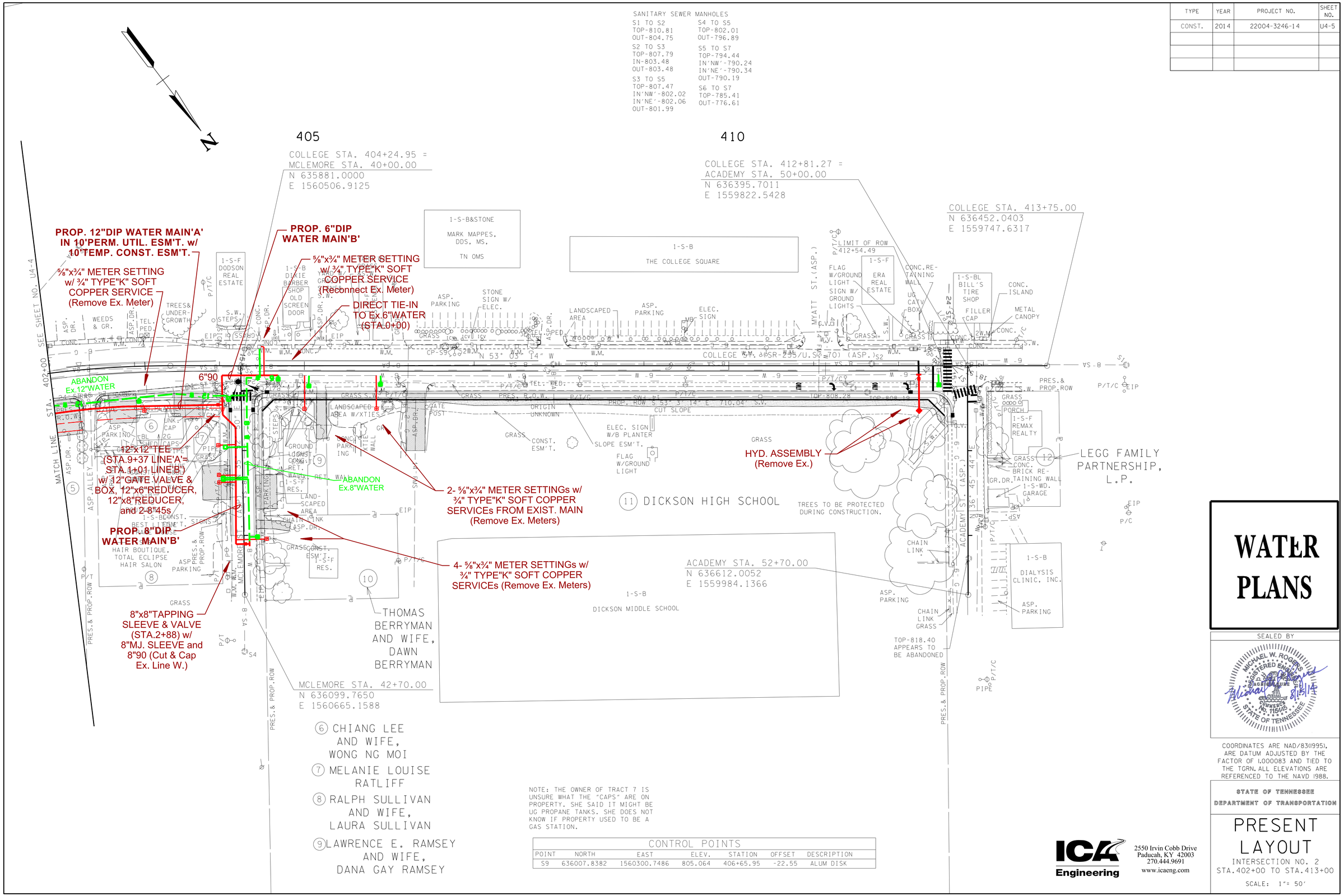

NOTE: THE OWNER OF TRACT 7 IS UNSURE WHAT THE "CAPS" ARE ON PROPERTY. SHE SAID IT MIGHT BE UG PROPANE TANKS. SHE DOES NOT KNOW IF PROPERTY USED TO BE A GAS STATION.

CONTROL POINTS

POINT	NORTH	EAST	ELEV.	STATION	OFFSET	DESCRIPTION
S9	636007.8382	1560300.7486	805.064	406+65.95	-22.55	ALUM DISK

WATER PLANS

SEALED BY

MICHAEL W. ROGERS REGISTERED ENGINEER SIGNATURE AND SEAL COMMERCE No. 115449 STATE OF TENNESSEE
Michael W. Rogers 8/13/14

COORDINATES ARE NAD/83(1995). ARE DATUM ADJUSTED BY THE FACTOR OF 1.000083 AND TIED TO THE TGRN. ALL ELEVATIONS ARE REFERENCED TO THE NAVD 1988.

STATE OF TENNESSEE
DEPARTMENT OF TRANSPORTATION

PRESENT LAYOUT

INTERSECTION NO. 2
STA.402+00 TO STA.413+00

SCALE: 1"= 50'

ICA Engineering
2550 Irvin Cobb Drive
Paducah, KY 42003
270.444.9691
www.icaeng.com

10/7/2014 2:48:02 PM
E:_2014 JOBS\14077 Dickson County\Dwgs\WATER COLOR\W005 C.SHT

TYPE	YEAR	PROJECT NO.	SHEET NO.
CONST.	2014	22004-3246-14	U4-6
.	.	.	.
.	.	.	.
.	.	.	.

STORM DRAINAGE STRUCTURES

D1
TOP-851.57
OUT-849.08
15"RCP

D2
TOP-851.27
IN-848.07
15"RCP
BOT-847.62
OUT-847.53
18"RCP

D3 (TO BE REMOVED)
TOP-854.97
IN-'SW'-844.66
18"RCP
IN'NW'-851.17
18"RCP
BOT-840.77
OUT-840.76
18"RCP

D4
INV-852.34
8"PVC W/
STONE EW

D5
INV-851.18
18"RCP
W/CONC. EW

D6
INV-854.22
W/CONC. EW

D7
INV-852.77
W/CONC. EW

D8
INV-858.58
W/CONC. EW

D9
INV-859.25
W/CONC. EW

D10
TOP-854.35
OUT-840.54
18"RCP

D11
TOP-863.19
OUT-859.88
18"RCP

D12
INV-875.83
18"CMP

D13
INV-872.76
18"CPP

D14
INV-869.54

D15
INV-867.57

D16
INV-868.79

D17
NOT FOUND
APPROX.
LOC. SHOWN

D18
INV-864.90
W/CONC. EW
22"X14" RCP

D19
INV-863.66
W/CONC. EW
22"X14" RCP

D20 (TO BE REMOVED)
TOP-863.39
OUT-862.78
3-4" CPP

D21
INV-860.61
3-4" CPP

D22 (TO BE REMOVED)
INV-860.39
18"RCP
W/CONC. EW

D23
TOP-861.84
OUT-857.93
18"RCP

J1
NOTE: ALL UNDERGROUND
STORM DRAINAGE LINE LOCATIONS
@ BLIND PIPE INTERSECTIONS AND JUNCTION
BOXES ALONG WITH JUNCTION BOX LOCATIONS
SHOWN HEREON WERE INTERPOLATED FROM
PLANS OR ASSUMED.

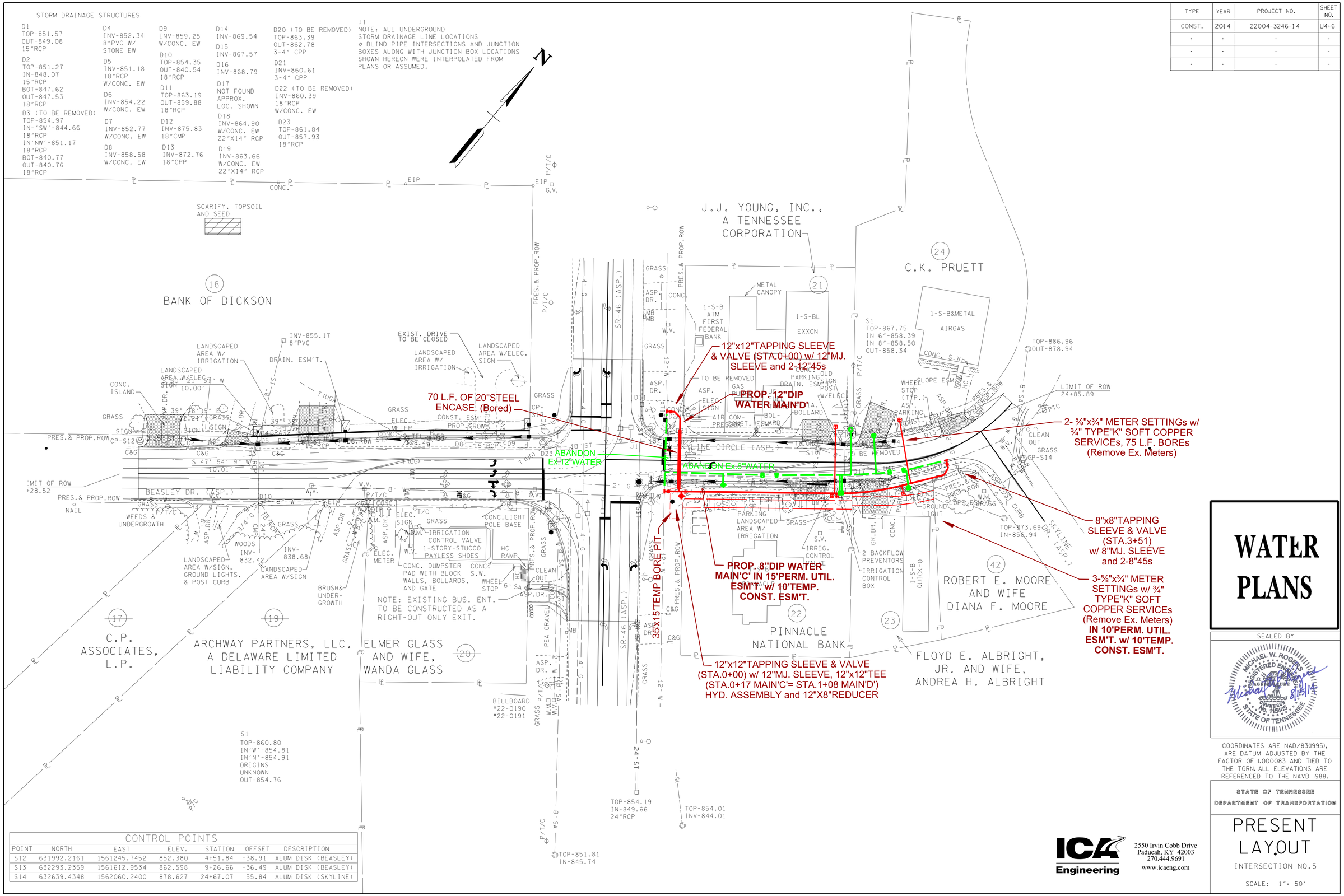

CONTROL POINTS						
POINT	NORTH	EAST	ELEV.	STATION	OFFSET	DESCRIPTION
S12	631992.2161	1561245.7452	852.380	4+51.84	-38.91	ALUM DISK (BEASLEY)
S13	632293.2359	1561612.9534	862.598	9+26.66	-36.49	ALUM DISK (BEASLEY)
S14	632639.4348	1562060.2400	878.627	24+67.07	55.84	ALUM DISK (SKYLINE)

WATER PLANS

SEALED BY

MICHAEL W. ROGERS
REGISTERED ENGINEER
No. 116945
STATE OF TENNESSEE
Michael W. Rogers 8/5/14

COORDINATES ARE NAD/83(1995), ARE DATUM ADJUSTED BY THE FACTOR OF 1.000083 AND TIED TO THE TGRN. ALL ELEVATIONS ARE REFERENCED TO THE NAVD 1988.

STATE OF TENNESSEE
DEPARTMENT OF TRANSPORTATION

PRESENT LAYOUT

INTERSECTION NO.5

SCALE: 1"= 50'

ICA Engineering
2550 Irvin Cobb Drive
Paducah, KY 42003
270.444.9691
www.icaeng.com

$$$$SYTIME$$$$$$$
$$$$DGNSPEC$$$$$$$

TYPE	YEAR	PROJECT NO.	SHEET NO.
CONST.	2014	22004-3246-14	U4-7

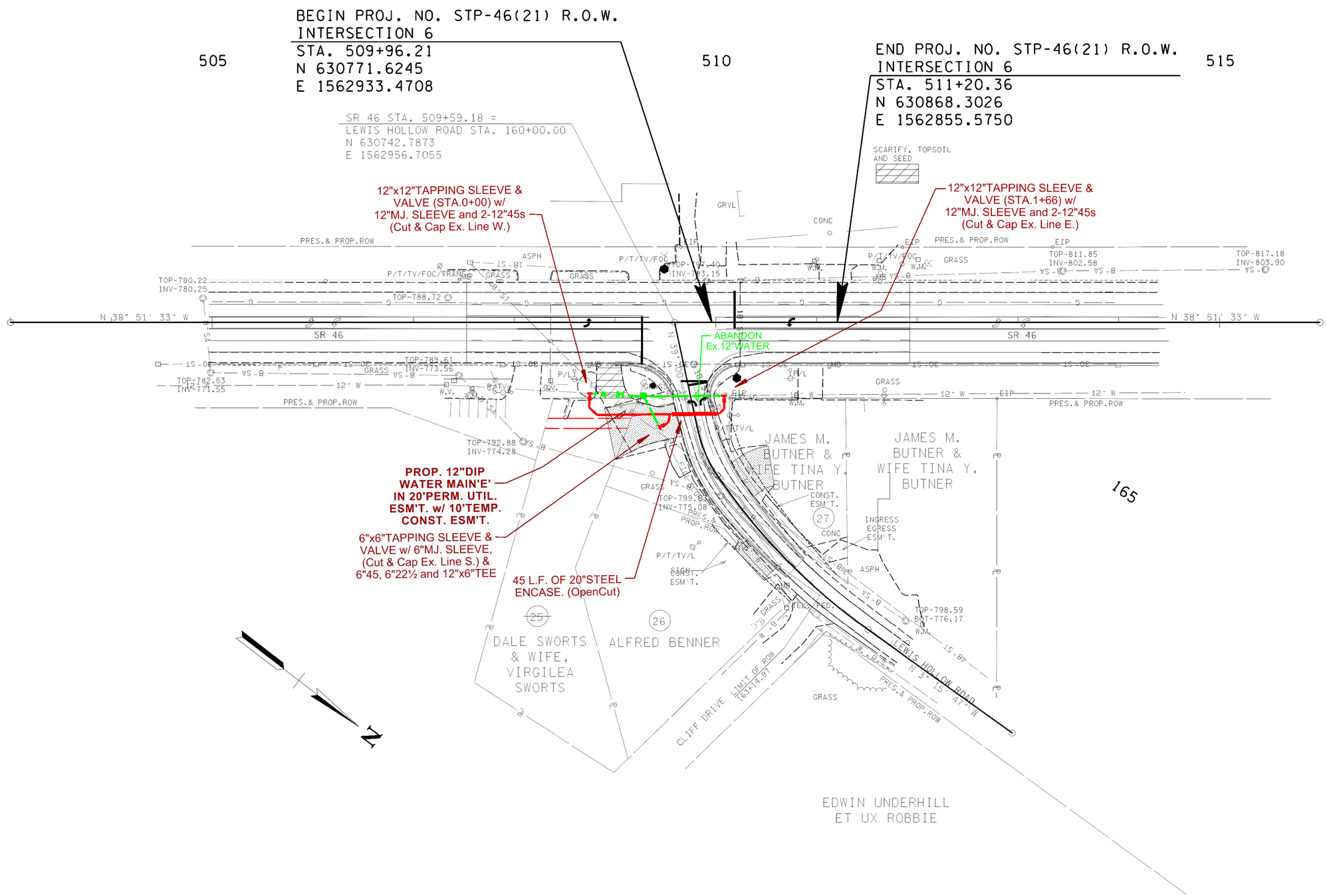

WATER PLANS

SEALED BY

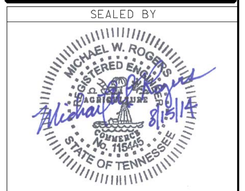

COORDINATES ARE NAD/83(1995). ARE DATUM ADJUSTED BY THE FACTOR OF 1.000083 AND TIED TO THE TGRN. ALL ELEVATIONS ARE REFERENCED TO THE NAVD 1988.

STATE OF TENNESSEE
DEPARTMENT OF TRANSPORTATION

PRESENT LAYOUT

INTERSECTION NO.6

SCALE: 1"= 50'

ICA Engineering
2550 Irvin Cobb Drive
Paducah, KY 42003
270.444.9691
www.icaeng.com

8/18/2014 1:11:50 PM
E:_2014 JOBS\14077 Dickson County\Dwgs\WATER COLOR\W007 C.SHT

TYPE	YEAR	PROJECT NO.	SHEET NO.
CONST.	2014	22004-3246-14	9

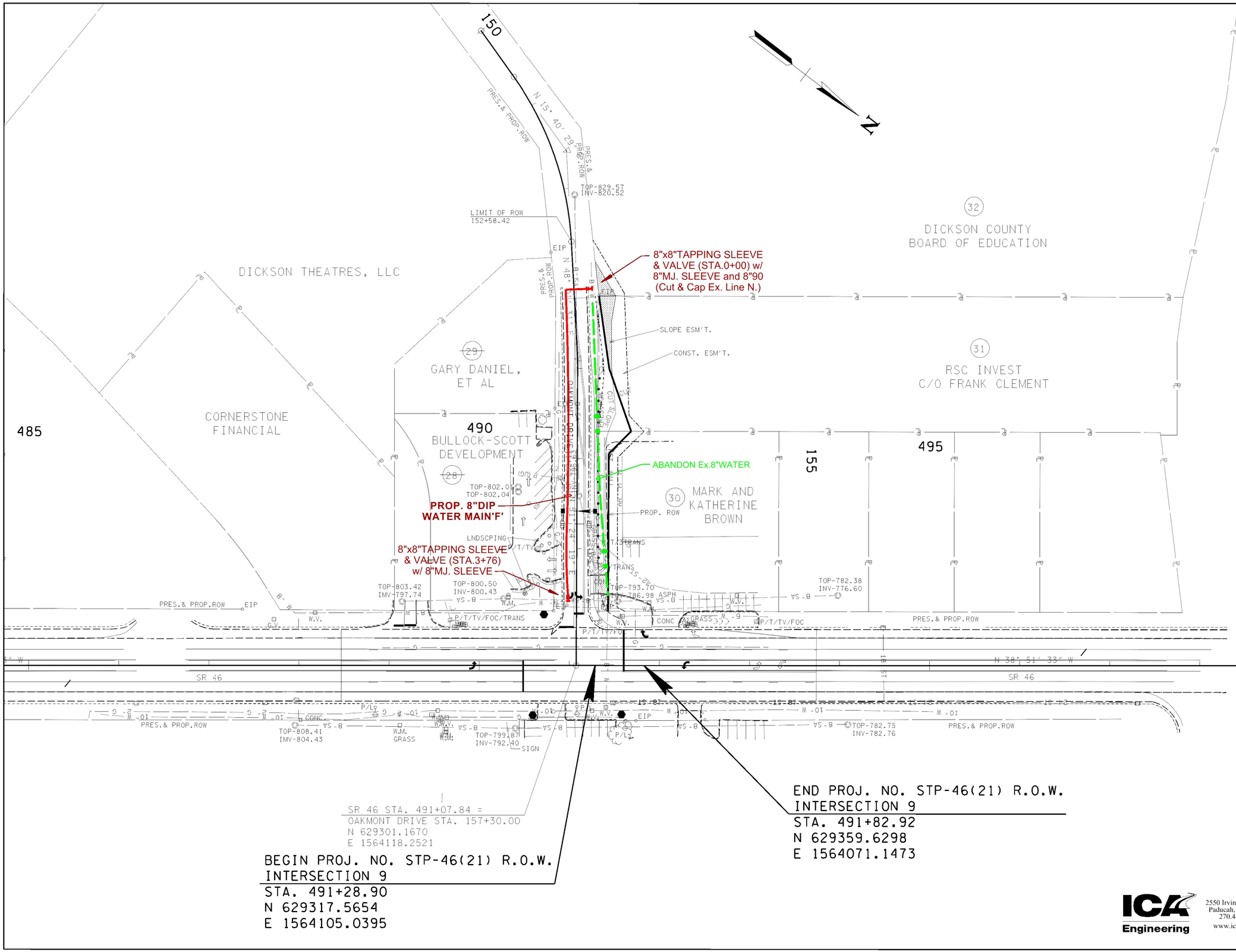

WATER PLANS

SEALED BY

MICHAEL W. ROGERS REGISTERED ENGINEER AGRICULTURE ROWNERS No. 115449 STATE OF TENNESSEE

8/18/14

COORDINATES ARE NAD/83(1995), ARE DATUM ADJUSTED BY THE FACTOR OF 1.000083 AND TIED TO THE TGRN. ALL ELEVATIONS ARE REFERENCED TO THE NAVD 1988.

STATE OF TENNESSEE
DEPARTMENT OF TRANSPORTATION

PRESENT LAYOUT

INTERSECTION NO.9

SCALE: 1"= 50'

ICA Engineering
2550 Irvin Cobb Drive
Paducah, KY 42003
270.444.9691
www.icaeng.com

8/18/2014 4:35:03 PM
E:_2014 JOBS\14077 Dickson County\Dwgs\WATER COLOR\W008.CSHT

TYPE	YEAR	PROJECT NO.	SHEET NO.
CONST.	2014	22004-3246-14	U4-9

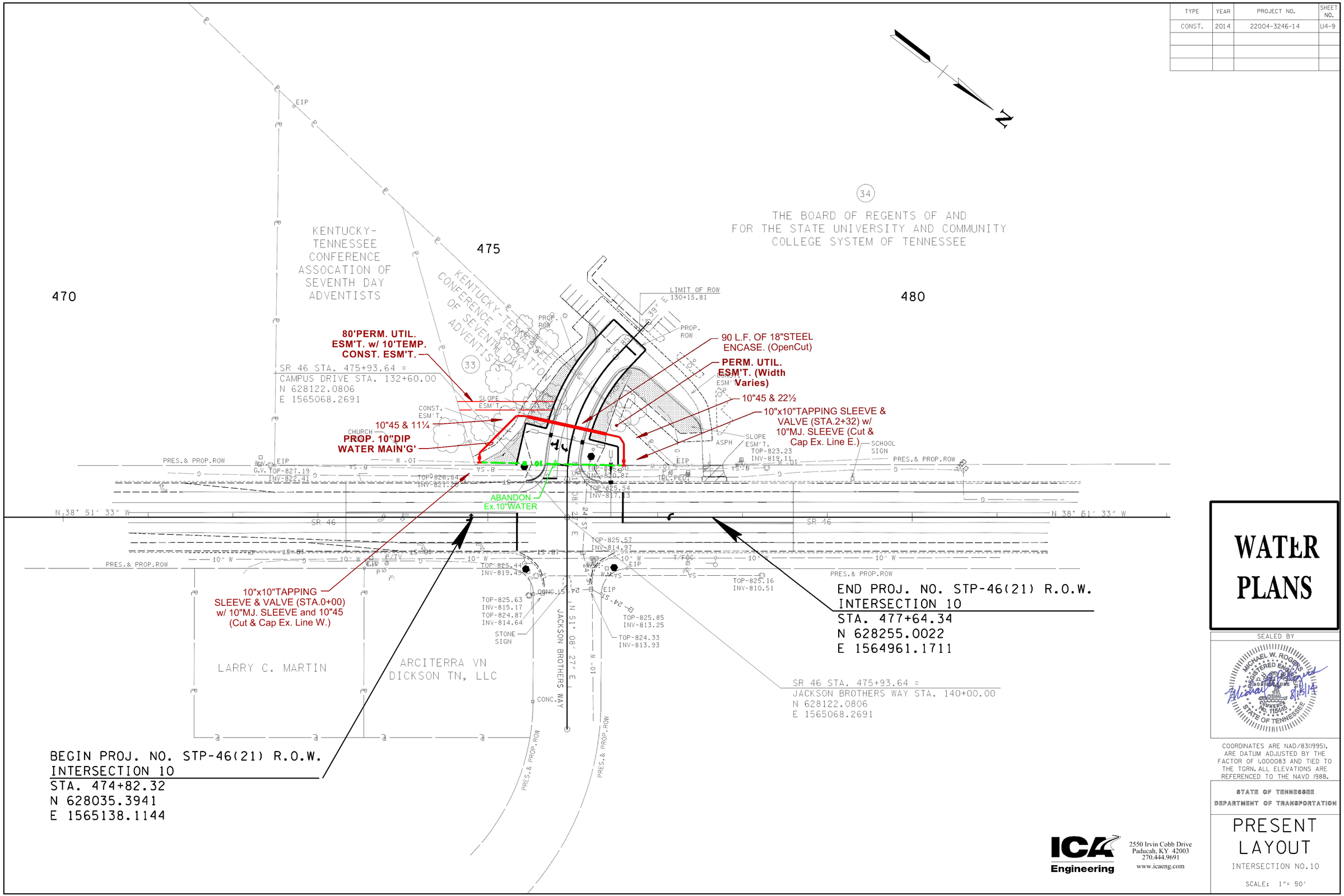

WATER PLANS

SEALED BY

MICHAEL W. ROGERS REGISTERED ENGINEER AGRICULTURE & COMMERCE No. 115449 STATE OF TENNESSEE

8/18/14

COORDINATES ARE NAD/83(1995), ARE DATUM ADJUSTED BY THE FACTOR OF 1.000083 AND TIED TO THE TGRN. ALL ELEVATIONS ARE REFERENCED TO THE NAVD 1988.

STATE OF TENNESSEE
DEPARTMENT OF TRANSPORTATION

PRESENT LAYOUT

INTERSECTION NO.10

SCALE: 1"= 50'

ICA Engineering
2550 Irvin Cobb Drive
Paducah, KY 42003
270.444.9691
www.icaeng.com

8/18/2014 4:40:00 PM
E:_2014 JOBS\14077 Dickson County\Dwgs\WATER COLOR\W009 C.SHT

TYPE	YEAR	PROJECT NO.	SHEET NO.
CONST.	2014	22004-3246-14	U4-10

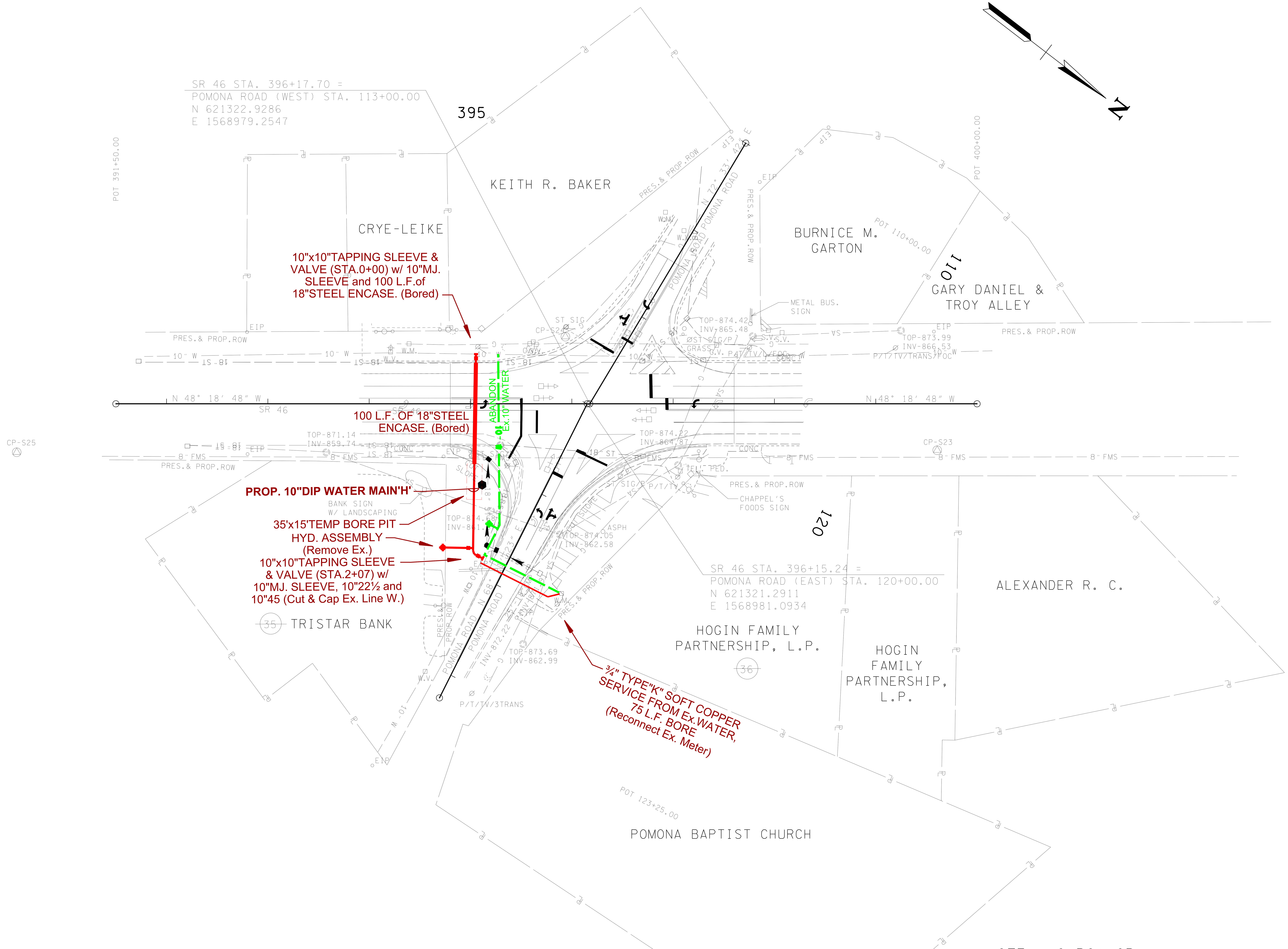

CONTROL POINTS					
POINT	NORTH	EAST	ELEV.	STATION	OFFSET
S23	621585.2820	1568753.6448	873.44	399+60.67	45.88′ (RT)
S24	621257.4832	1568953.1085	873.68	395+93.70	66.26′ (LT)

$$$$SYTIME$$$$$$$$
$$$$DGNSPEC$$$

NOTE: NO ROW OR EASEMENTS REQUIRED.

ICA Engineering
2550 Irvin Cobb Drive
Paducah, KY 42003
270.444.9691
www.icaeng.com

WATER PLANS

SEALED BY

MICHAEL W. ROGERS REGISTERED ENGINEER AGRICULTURE COMMERCE No. 115445 STATE OF TENNESSEE
Michael W. Rogers 8/5/14

COORDINATES ARE NAD/83(1995), ARE DATUM ADJUSTED BY THE FACTOR OF 1.000083 AND TIED TO THE TGRN. ALL ELEVATIONS ARE REFERENCED TO THE NAVD 1988.

STATE OF TENNESSEE
DEPARTMENT OF TRANSPORTATION

PRESENT LAYOUT

INTERSECTION NO.11

SCALE: 1″= 50′

TYPE	YEAR	PROJECT NO.	SHEET NO.
CONST.	2014	22004-3246-14	U4-11

REV. 04-30-14: ADDED BUILDING TO TRACT NO. 39.

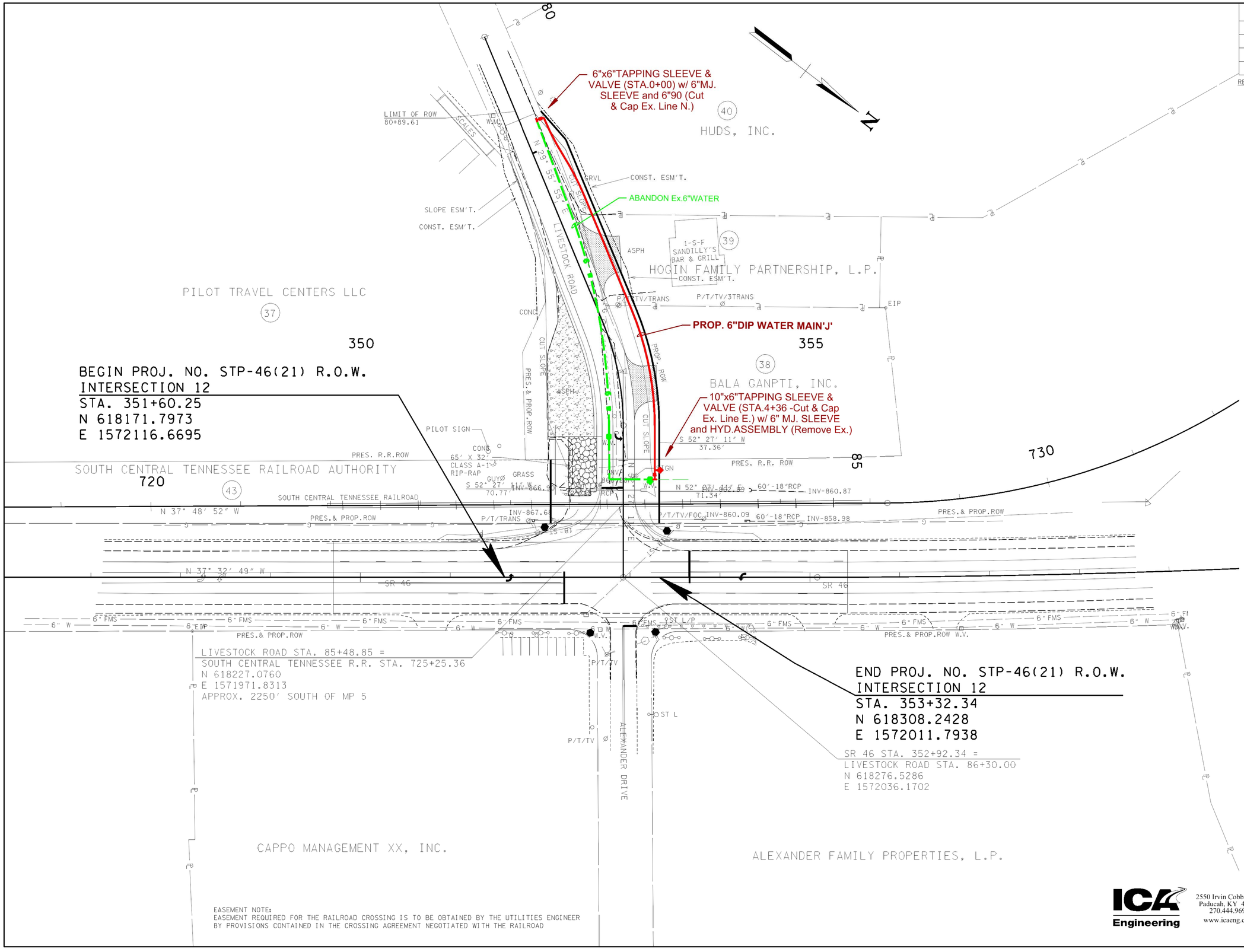

EASEMENT NOTE:
EASEMENT REQUIRED FOR THE RAILROAD CROSSING IS TO BE OBTAINED BY THE UTILITIES ENGINEER BY PROVISIONS CONTAINED IN THE CROSSING AGREEMENT NEGOTIATED WITH THE RAILROAD

WATER PLANS

SEALED BY

MICHAEL W. ROGERS
REGISTERED ENGINEER
AGRICULTURE
NO. 116945
STATE OF TENNESSEE
8/13/14

COORDINATES ARE NAD/83(1995), ARE DATUM ADJUSTED BY THE FACTOR OF 1.000083 AND TIED TO THE TGRN. ALL ELEVATIONS ARE REFERENCED TO THE NAVD 1988.

STATE OF TENNESSEE
DEPARTMENT OF TRANSPORTATION

PRESENT LAYOUT

INTERSECTION NO.12

SCALE: 1"= 50'

ICA Engineering
2550 Irvin Cobb Drive
Paducah, KY 42003
270.444.9691
www.icaeng.com

8/18/2014 1:15:18 PM
E:_2014 JOBS\14077 Dickson County\Dwgs\WATER COLOR\W011C.SHT

TYPE	YEAR	PROJECT NO.	SHEET NO.
CONST.	2014	22004-3246-14	U4-12

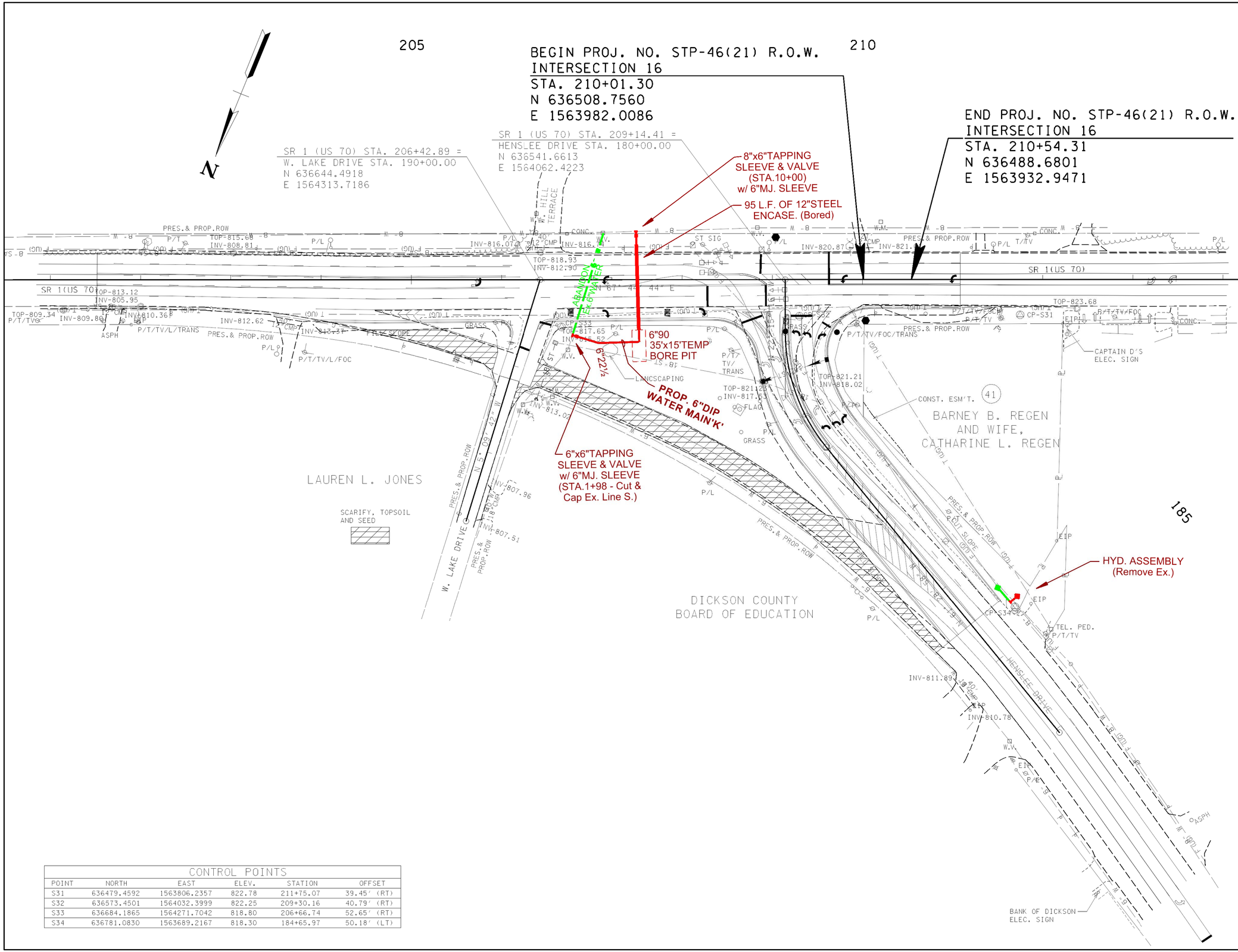

CONTROL POINTS					
POINT	NORTH	EAST	ELEV.	STATION	OFFSET
S31	636479.4592	1563806.2357	822.78	211+75.07	39.45' (RT)
S32	636573.4501	1564032.3999	822.25	209+30.16	40.79' (RT)
S33	636684.1865	1564271.7042	818.80	206+66.74	52.65' (RT)
S34	636781.0830	1563689.2167	818.30	184+65.97	50.18' (LT)

ICA Engineering
2550 Irvin Cobb Drive
Paducah, KY 42003
270.444.9691
www.icaeng.com

WATER PLANS

SEALED BY

MICHAEL W. ROGERS REGISTERED ENGINEER AGRICULTURE No. 115445 STATE OF TENNESSEE

8/15/14

COORDINATES ARE NAD/83(1995), ARE DATUM ADJUSTED BY THE FACTOR OF 1.000083 AND TIED TO THE TGRN. ALL ELEVATIONS ARE REFERENCED TO THE NAVD 1988.

STATE OF TENNESSEE
DEPARTMENT OF TRANSPORTATION

PRESENT LAYOUT

INTERSECTION NO.16

SCALE: 1"= 50'

8/18/2014 1:15:54 PM
E:_2014 JOBS\14077 Dickson County\Dwgs\WATER COLOR\W012 C.SHT

CONST.	2014	22004-3246-14	U4-13

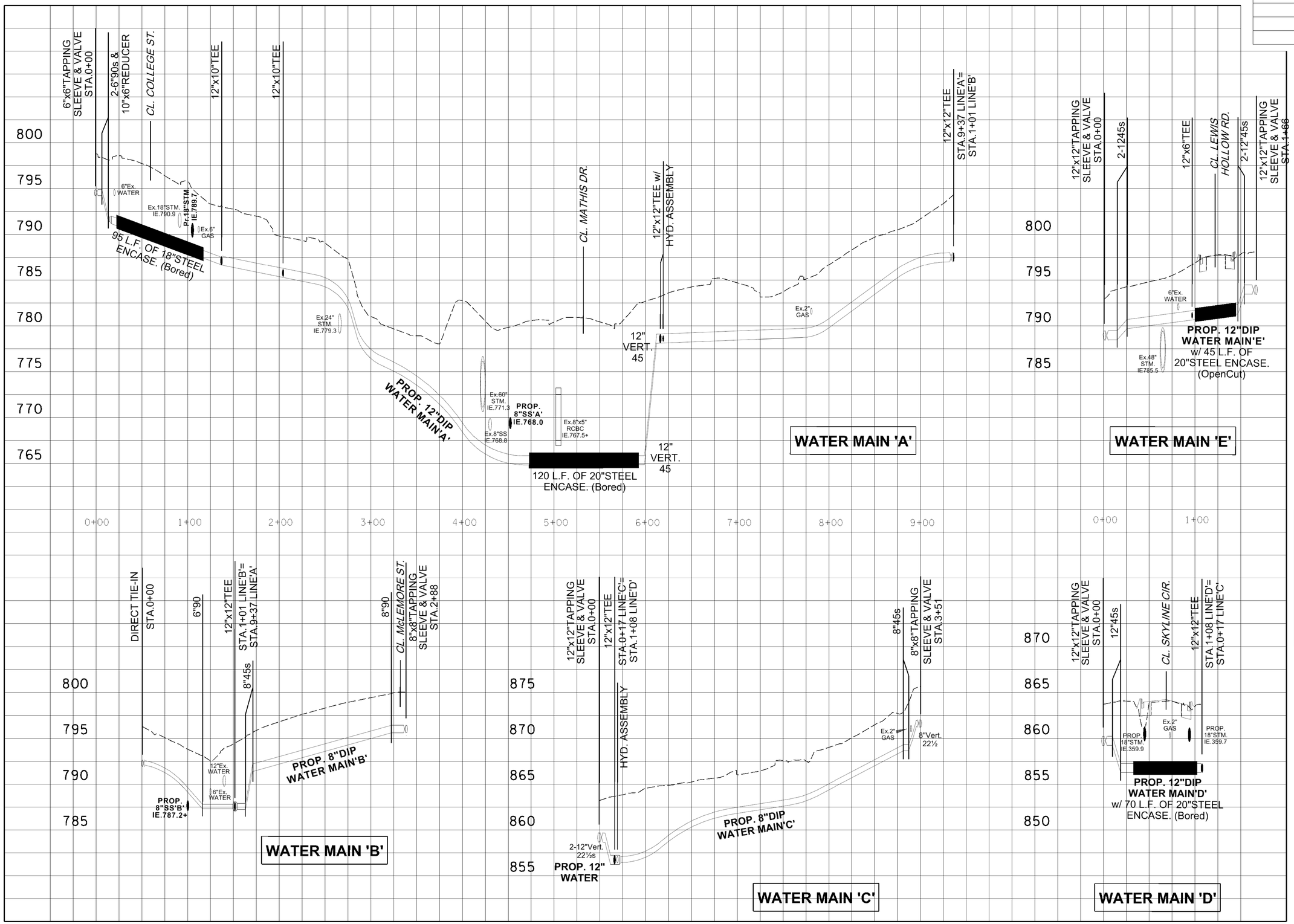

ICA Engineering
2550 Irvin Cobb Drive
Paducah, KY 42003
270.444.9691
www.icaeng.com

WATER PLANS

SEALED BY

MICHAEL W. ROGERS REGISTERED ENGINEER NO. 115449 STATE OF TENNESSEE
8/18/14

COORDINATES ARE NAD/83(1995), ARE DATUM ADJUSTED BY THE FACTOR OF 1.000083 AND TIED TO THE TGRN. ALL ELEVATIONS ARE REFERENCED TO THE NAVD 1988.

STATE OF TENNESSEE
DEPARTMENT OF TRANSPORTATION

PROFILE

WATER MAINS 'A-E'

SCALE: 1"=5' VERT.
1"= 50'HORIZ.

8/18/2014 1:05:47 PM
E:_2014 JOBS\14077 Dickson County\Dwgs\WATER\W013_14 Profiles.SHT

CONST.	2014	22004-3246-14	U4-14

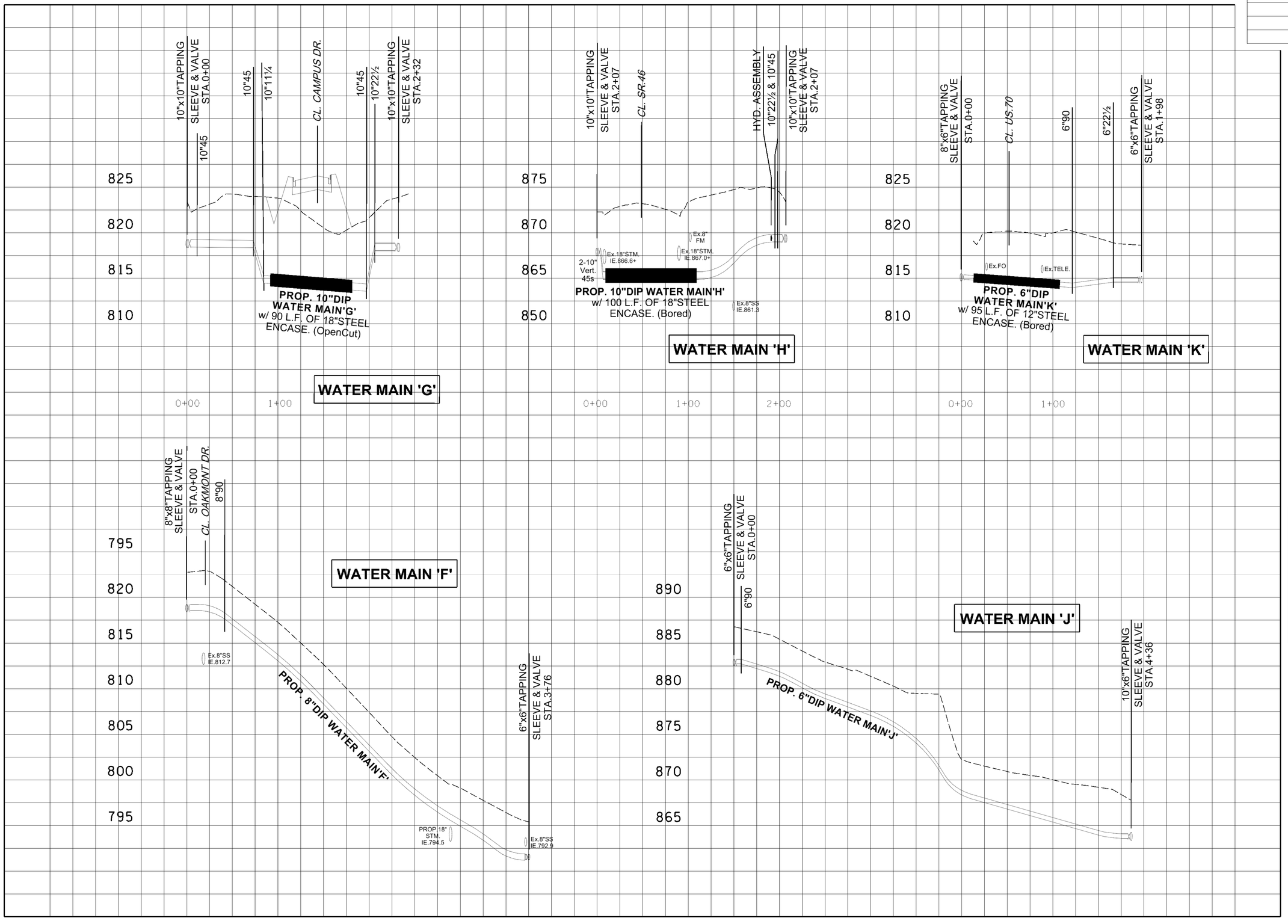

ICA Engineering
2550 Irvin Cobb Drive
Paducah, KY 42003
270.444.9691
www.icaeng.com

WATER PLANS

SEALED BY

MICHAEL W. ROGERS REGISTERED ENGINEER NO. 115449 STATE OF TENNESSEE

8/18/14

COORDINATES ARE NAD/83(1995), ARE DATUM ADJUSTED BY THE FACTOR OF 1.000083 AND TIED TO THE TGRN. ALL ELEVATIONS ARE REFERENCED TO THE NAVD 1988.

STATE OF TENNESSEE
DEPARTMENT OF TRANSPORTATION

PROFILE

WATER MAINS 'F-K'

SCALE: 1"=5' VERT.
1"= 50'HORIZ.

8/18/2014 4:06:15 PM
E:_2014 JOBS\14077 Dickson County\Dwgs\WATER\W013_14 Profiles.SHT

TYPE	YEAR	PROJECT NO.	SHEET NO.
CONST.	2014	22004-3246-14	U4-15

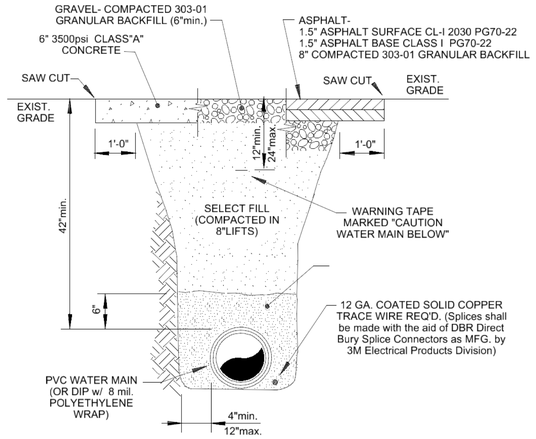

OPEN CUT DRIVEWAY TRENCH

NOTE:

PIPE BEDDING, WARNING TAPE, TRACER WIRE AND POLYETHYLENE WRAP SHALL BE INCIDENTAL TO THE UNIT PRICE FOR WATER MAIN.

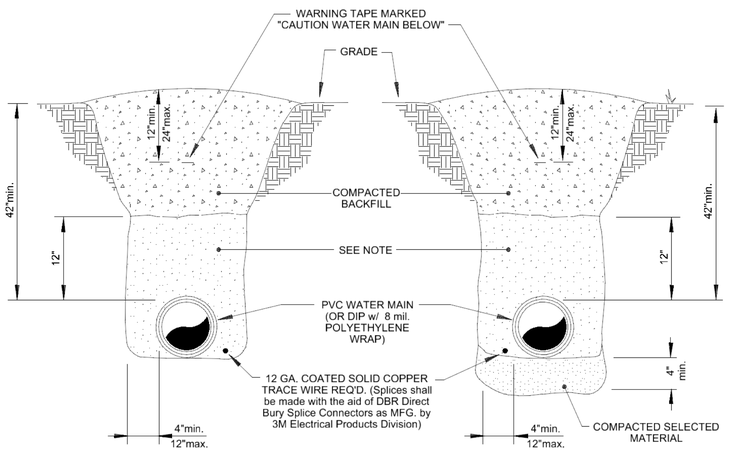

TRENCH SECTION IN SOIL

TRENCH SECTION IN ROCK

NOTES:

COMPACTED BACKFILL SHALL BE PLACED TO A ONE FOOT min. DEPTH OF COVER. THE INITIAL BACKFILL SHALL BE A MATERIAL FREE FROM ROCKS GREATER THAN ½" dia., SOIL CLODS, OR FROZEN MATERIAL. WHEN AUTOMATIC TAMPERS ARE USED, CARE SHALL BE EXERCISED TO AVOID DAMAGE TO THE PIPE.

ALL WATER LINE TRENCHES AND BORE PIT AREAS SHALL BE MECHANICALLY COMPACTED IN 12" LOOSE LIFTS SPECIFIED COMPACTION PERCENTAGES AS OUTLINED IN SPECIFICATION SECTION 02220.

COMPACTED BACKFILL, WARNING TAPE, TRACER WIRE AND POLY-WRAP SHALL BE INCIDENTAL TO THE UNIT PRICE FOR WATER MAIN.

PIPE BEDDING, WARNING TAPE, TRACER WIRE AND POLYETHYLENE WRAP SHALL BE INCIDENTAL TO THE UNIT PRICE FOR WATER MAIN.

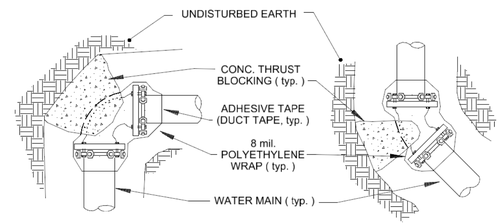

PLAN OF 90°FITTING

PLAN OF 45° OR 22½° FITTINGS

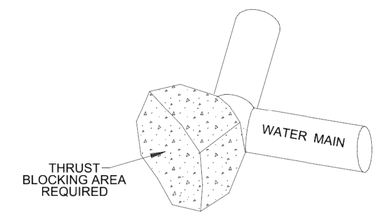

ISOMETRIC

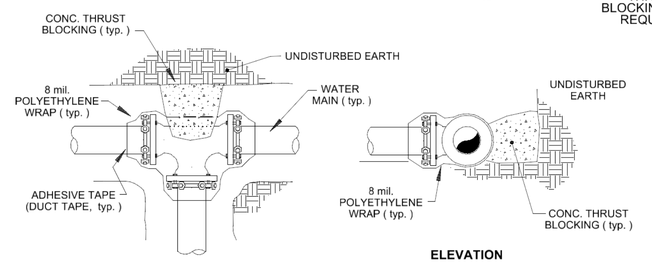

PLAN OF TEE

ELEVATION

THRUST BLOCKING

NOTES:

PROVIDE THRUST RESTRAINT GLANDS BY EBBA IRON, UNI-FLANGE OR APPROVED EQUAL FOR ALL MECHANICAL JOINT FITTINGS.

THRUST BLOCKING TO BE KY. CLASS"B" CONCRETE (2500 psi).

THRUST BLOCK AREA

PIPE SIZE	22½° FITTING	45° FITTING	90° FITTING	TEES
6"	2 sq. ft.	3 sq. ft.	4 sq. ft.	4 sq. ft.
8"	3 sq. ft.	4 sq. ft.	8 sq. ft.	8 sq. ft.
10"	4 sq. ft.	6½ sq. ft.	12 sq. ft.	12 sq. ft.
12"	5 sq. ft.	9 sq. ft.	16 sq. ft.	16 sq. ft.
16"	8 sq. ft.	16 sq. ft.	29 sq. ft.	29 sq. ft.
18"	12 sq. ft.	20 sq. ft.	35 sq. ft.	35 sq. ft.
20"	13 sq. ft.	24 sq. ft.	45 sq. ft.	45 sq. ft.
24"	18 sq. ft.	35 sq. ft.	64 sq. ft.	64 sq. ft.

THRUST RESTRAINT TABLE
(min. LENGTH OF PIPE RESTRAINTED FROM FITTING)

PIPE SIZE	11¼° FITTING	22½° FITTING	45° FITTING	90° FITTING	TEE BRANCH	DEAD END
6"	2 ft.	4 ft.	9 ft.	21 ft.	24 ft.	29 ft.
8"	3 ft.	6 ft.	12 ft.	28 ft.	34 ft.	38 ft.
10"	3 ft.	7 ft.	14 ft.	33 ft.	41 ft.	46 ft.
12"	4 ft.	8 ft.	16 ft.	39 ft.	50 ft.	55 ft.
16"	5 ft.	10 ft.	21 ft.	51 ft.	66 ft.	72 ft.
18"	6 ft.	11 ft.	23 ft.	57 ft.	74 ft.	80 ft.
20"	6 ft.	12 ft.	26 ft.	62 ft.	82 ft.	88 ft.
24"	7 ft.	15 ft.	30 ft.	73 ft.	98 ft.	104 ft.

NOTE:

WHEN REQUIRED BY PLAN OR DETAIL A SUFFICIENT NUMBER OF JOINTS SHALL BE RESTRAINED FROM A FITTING TO COMPLY WITH THE LENGTH NOTED IN THE TABLE.

WATER PLANS

SEALED BY

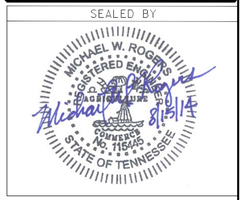

COORDINATES ARE NAD/83(1995), ARE DATUM ADJUSTED BY THE FACTOR OF 1.000083 AND TIED TO THE TGRN. ALL ELEVATIONS ARE REFERENCED TO THE NAVD 1988.

STATE OF TENNESSEE
DEPARTMENT OF TRANSPORTATION

WATER DETAILS

NTS

ICA Engineering
2550 Irvin Cobb Drive
Paducah, KY 42003
270.444.9691
www.icaeng.com

8/18/2014 1:06:48 PM
E:_2014 JOBS\14077 Dickson County\Dwgs\WATER\W015 Details.SHT

TYPE	YEAR	PROJECT NO.	SHEET NO.
CONST.	2014	22004-3246-14	U4-16

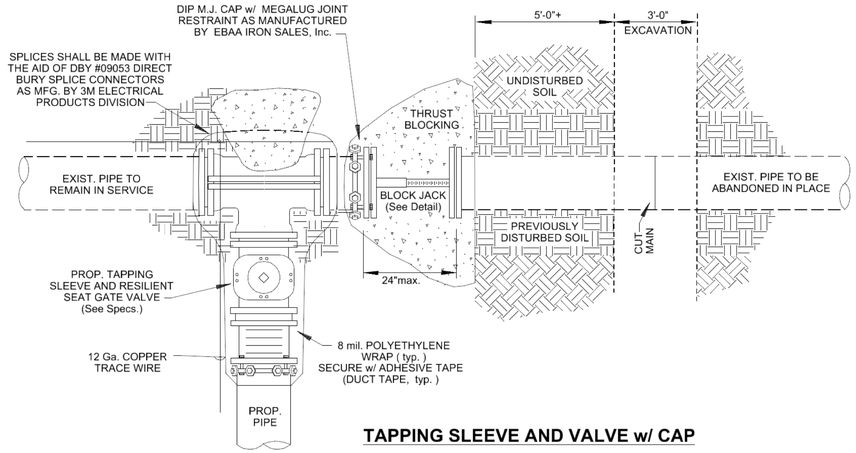

TAPPING SLEEVE AND VALVE w/ CAP

NOTES:

THE CONTRACTOR SHALL BE RESPONSIBLE FOR EXPOSING AND PREP WORK FOR THE MAIN TAP PRIOR TO THE OWNERS TAPPING CREW ARRIVAL.

THE CONTRACTOR SHALL CUT AND CAP THE EXISTING WATER LINE AFTER THE REQUIRED TESTING OF THE NEW WATER LINE HAS BEEN COMPLETED AND ACCEPTED BY THE UTILTY.

THE CONTRACTOR SHALL ALSO BE RESPONSIBLE FOR THE MAIN TIE-IN, CONSTRUCTION OF THRUST BLOCKING AS DESIGNATED, PLACEMENT OF VALVE BOX, BACKFILL AND SURFACE RESTORATION.

AFTER CONCRETE THRUST BLOCKING HAS SET, EXCAVATE AND SEVER ABANDONED WATER MAIN WHERE SHOWN TO PREVENT FUTURE DISTURBANCE.

COST FOR BLOCK JACK, CAP, MEGALUG, STEEL PLATING, EXCAVATION, ETC. IS INCIDENTAL TO THE UNIT PRICE - PREPARATION FOR TAPPING SLEEVE & VALVE.

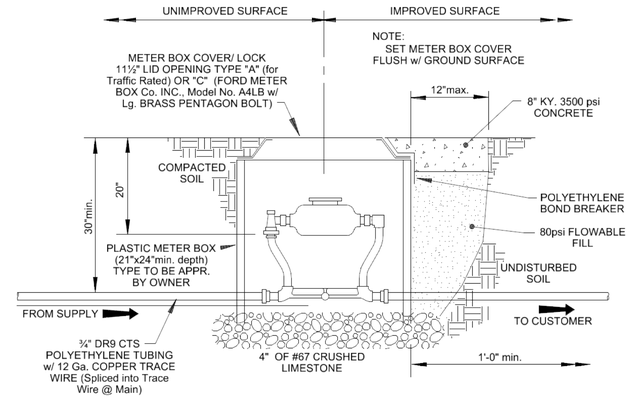

⅝"x¾" to 1" METER SETTING

NOTES:

METER SETTING SHALL BE A ⅝"x¾" COPPERSETTER WITH BALL INLET AND COMPRESSION OUTLET VALVES. COPPERSETTER SHALL BE A FORD 70 SERIES MODEL VBG72 OR APPROVED EQUAL.

BOX PLACEMENT EXCAVATION IN IMPROVED AREAS SUCH AS DRIVEWAYS, SIDEWALKS, ETC. TO BE BACKFILLED AND CAPPED WITH CONCRETE.

EXISTING METER BOX BONNETS TO BE RETURNED TO UTILITY OWNER'S MATERIAL YARD.

COMPACTED BACKFILL AND TRACER WIRE SHALL BE INCIDENTAL TO THE UNIT PRICE FOR METER SETTING.

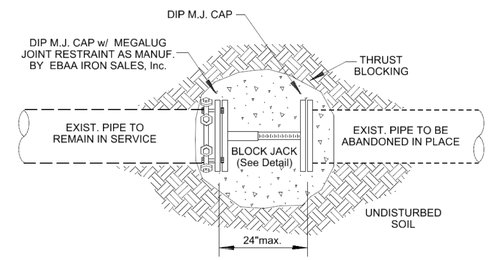

CUT & CAP EXIST. MAIN

NOTES:

COST FOR BLOCK JACK, CAP, MEGALUG, STEEL PLATING, EXCAVATION, ETC. IS INCIDENTAL TO THE UNIT PRICE - CUT & CAP EXISTING MAIN.

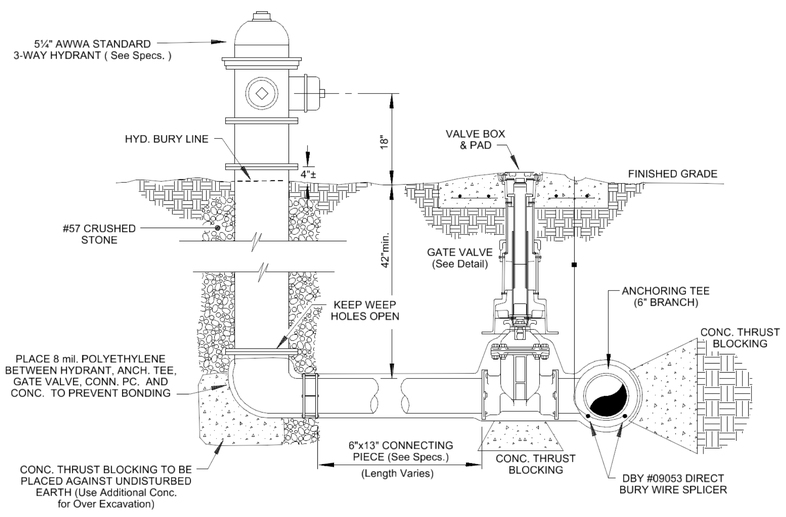

FIRE HYDRANT ASSEMBLY

NOTES:

THE UNIT PRICE ASSOCIATED WITH THE BID ITEM "FIRE HYDRANT ASSEMBLY" SHALL INCLUDE THE FIRE HYDRANT, CONNECTING PIECE, 6"GATE VALVE AND BOX, & ANCHORING TEE WITH THRUST RESTRAINT GLANDS.

ALL CONCRETE SHALL BE CLASS "B"

CRUSHED STONE SHALL BE EXTENDED 6" ABOVE DRAIN OPENINGS IN HYDRANT BASE.

PUMPER NOZZLE TO FACE IN DIRECTION OF STREET UNLESS OTHERWISE SPECIFIED.

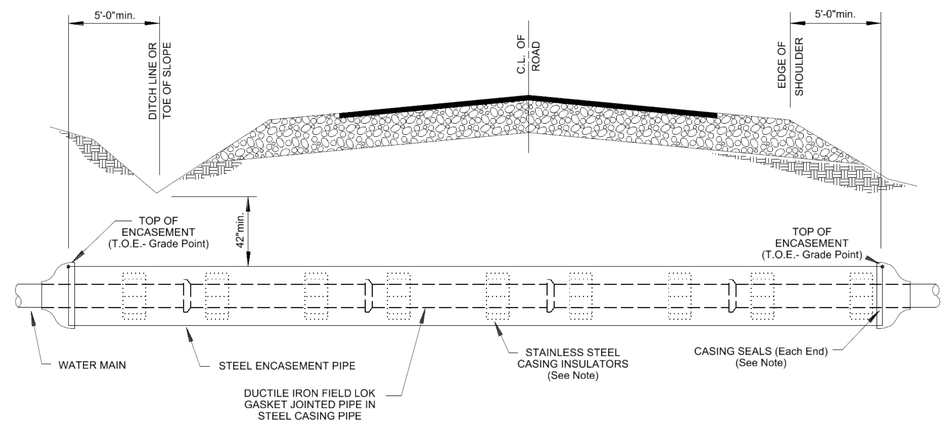

STEEL ENCASEMENT

NOTES :

EXCAVATION BETWEEN DITCH LINES OR WITHIN 5'-0" OF THE SHOULDER IF THERE IS NO DITCH IS PROHIBITED. VERIFY THE LENGTH OF ENCASEMENT AT EACH ROADWAY CROSSING AND NOTIFY THE ENGINEER PRIOR TO INSTALLATION IF THE LENGTH NOTED ON THE PLANS IS INSUFFICIENT.

INSTALL FIELD LOK GASKETS WITHIN ALL ENCASEMENT PIPE AND ONE PIPE LENGTH OUTSIDE OF THE CASING ON BOTH ENDS. ALL WATER MAIN WITH STEEL ENCASEMENT SHALL BE POLY-WRAPPED IN ACCORDANCE WITH THE DETAIL PROVIDED.

CASING INSULATORS SHALL BE MODEL S8G-2 AS MFR. BY PSI, 6525 GOFORTH ST., HOUSTON, TX. 77021 OR EQUIVALENT. SPACE AT 6'-0"max. C/C.

CASING SEALS SHALL BE MODEL S AS MFR. BY PSI OR EQUIVALENT.

THE UNIT PRICE FOR STEEL ENCASEMENT SHALL INCLUDE ALL ACCESSORY ITEMS SUCH AS CASING SKIDS, CASING SEALS, & JOINT RESTRAINT GASKETS.

FINISHED STEEL ENCASEMENT PRODUCT SHALL BE INSTALLED WITHIN 6" OF GRADE POINT ELEVATIONS OR WITHIN 6" OF GRADE POINTS AS PRIOR AGREED BY FIELD ENGINEER.

ICA Engineering
2550 Irvin Cobb Drive
Paducah, KY 42003
270.444.9691
www.icaeng.com

WATER PLANS

SEALED BY

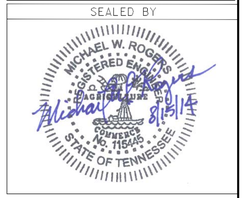

COORDINATES ARE NAD/83(1995), ARE DATUM ADJUSTED BY THE FACTOR OF 1.000083 AND TIED TO THE TGRN. ALL ELEVATIONS ARE REFERENCED TO THE NAVD 1988.

STATE OF TENNESSEE
DEPARTMENT OF TRANSPORTATION

WATER DETAILS

NTS

8/18/2014 1:07:18 PM
E:_2014 JOBS\14077 Dickson County\Dwgs\WATER\W016 Details.SHT

TYPE	YEAR	PROJECT NO.	SHEET NO.
CONST.	2014	22004-3246-14	U4-17

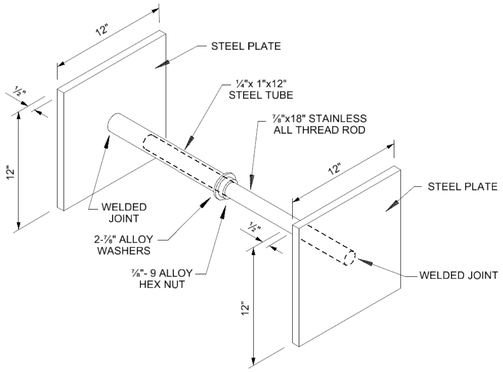

TYPICAL CUT & CAP w/ BLOCK JACK (<8" WATER MAINS)

NOTES:

LEAVE JACK IN PLACE WITH CONCRETE THRUST BLOCKING.

ENSURE ENDS OF EXISTING WATER MAIN ARE CUT SQUARELY PRIOR TO INSTALLATION.

THE COST OF THIS ITEM SHALL BE INCIDENTAL TO THE UNIT PRICE FOR WATER MAIN.

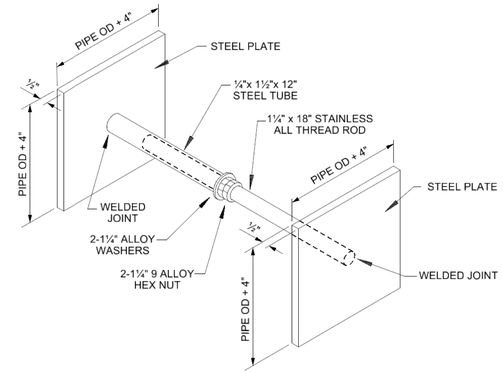

TYPICAL CUT & CAP w/ BLOCK JACK (>8" WATER MAINS)

NOTES:

LEAVE JACK IN PLACE WITH CONCRETE THRUST BLOCKING.

ENSURE ENDS OF EXISTING WATER MAIN ARE CUT SQUARELY PRIOR TO INSTALLATION.

THE COST OF THIS ITEM SHALL BE INCIDENTAL TO THE UNIT PRICE FOR WATER MAIN.

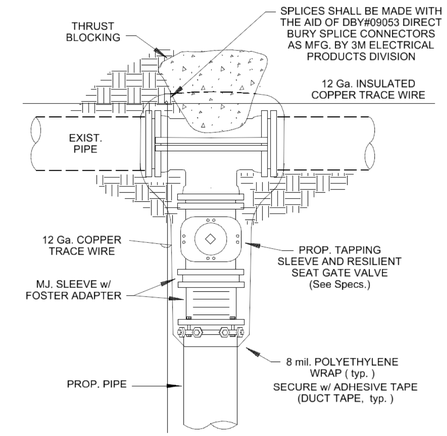

TAPPING SLEEVE AND VALVE

NOTE:

THE CONTRACTOR SHALL BE RESPONSIBLE FOR EXPOSING AND PREP WORK FOR THE MAIN TAP PRIOR TO THE TAPPING CREW ARRIVAL. THE CONTRACTOR SHALL ALSO BE RESPONSIBLE FOR THE MAIN TIE-IN, CONSTRUCTION OF THRUST BLOCKING AS DESIGNATED, PLACEMENT OF VALVE BOX, BACKFILL AND SURFACE RESTORATION.

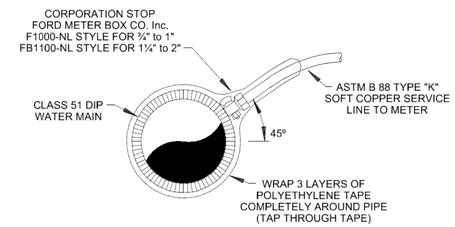

SERVICE TAP FOR DIP POLYETHELENE ENCASED

NOTE:

DUCTILE IRON AND CAST IRON PIPE SHALL BE INSTALLED WITH DIRECT MAIN TAP. NO SADDLE REQUIRED UNLESS OTHERWISE APPROVED BY PADUCAH WATER.

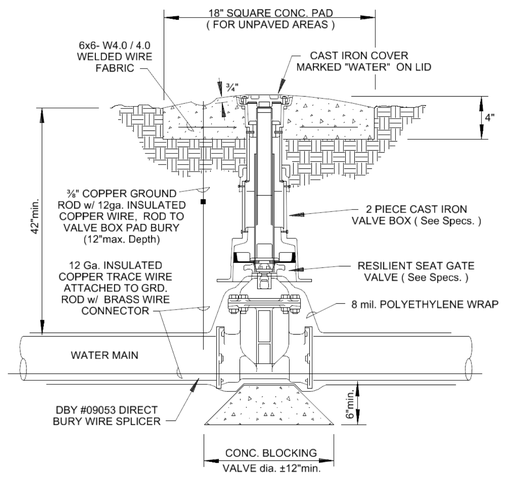

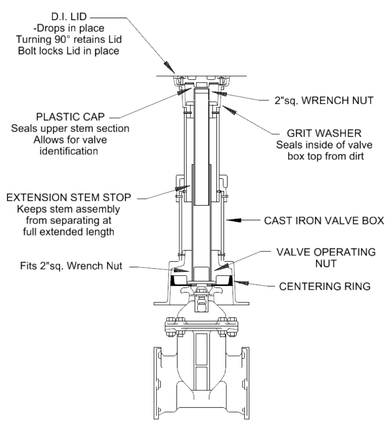

GATE VALVE & BOX (<12")

NOTES:

CONCRETE PADS SHALL BE CONSTRUCTED AROUND ALL MAIN LINE, FIRE LINE, AND FIRE HYDRANT GATE VALVE BOXES, EXCEPT WITHIN HARD PAVED AREAS.

CONCRETE PADS SHALL BE KDOH CLASS"A" CONCRETE WITH A WOOD FLOAT FINISH AND TOOLED EDGE.

THE VALVE BOX SHALL NOT TRANSMIT SHOCK OR STRESS TO THE VALVE.

INSTALL VALVE BOX PAD NO LESS THAN 9 MONTHS FOLLOWING MAIN INSTALLATION AND SEAL ANNULAR SPACE BETWEEN VALVE BOX & PAD WITH SILICONE SEALANT.

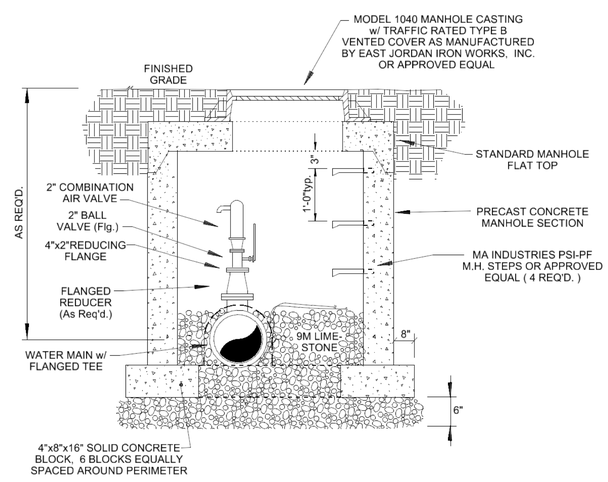

AIR RELEASE VALVE & VAULT

NOTES:

12 GA. COATED SOLID COPPER TRACE WIRE TO BE EXTENDED 30" INTO THE VAULT.

COMBINATION AIR VALVE SHALL BE A 2" MODEL D-041-C AS MANUFACTURED BY A.R.I. FLOW CONTROL ACCESSORIES OR ENGINEER APPROVED EQUAL.

WATER PLANS

SEALED BY

MICHAEL W. ROGERS REGISTERED ENGINEER NO. 115449 STATE OF TENNESSEE 8/18/14

COORDINATES ARE NAD/83(1995), ARE DATUM ADJUSTED BY THE FACTOR OF 1.000083 AND TIED TO THE TGRN. ALL ELEVATIONS ARE REFERENCED TO THE NAVD 1988.

STATE OF TENNESSEE
DEPARTMENT OF TRANSPORTATION

WATER DETAILS

NTS

ICA Engineering
2550 Irvin Cobb Drive
Paducah, KY 42003
270.444.9691
www.icaeng.com

8/18/2014 1:08:02 PM
E:_2014 JOBS\14077 Dickson County\Dwgs\WATER\W017 Details.SHT