TENNESSEE D.O.T.
DESIGN DIVISION

FILE NO.

TYPE	YEAR	PROJECT NO.	SHEET NO.
CONST.	2014	22004-3246-14	U2-1

DICKSON COUNTY

ESTIMATED QUANTITIES

	ITEM NO.	DESCRIPTION	UNIT	TOTAL QUANTITY
(1)	791-01.02	2" SCH. 40 STEEL GAS MAIN	L.F.	1,190
(1)	791-01.04	4" SCH. 40 STEEL GAS MAIN	L.F.	325
(1)	791-01.05	6" SCH. 40 STEEL GAS MAIN	L.F.	725
(1)	791-03.02	2" HDPE GAS MAIN	L.F.	225
(2)	791-04.01	1-1/4" HDPE GAS HDD (BORE)	L.F.	60
(2)	791-04.20	2" SCH. 40 STEEL GAS HDD (BORE)	L.F.	220
(2)	791-04.23	6" SCH. 40 STEEL GAS HDD (BORE)	L.F.	380
(2)	791-05.01	4" SCH. 40 STEEL GAS HDD WITH CASING (BORE)	L.F.	140
	791-06.02	2" PE CONNECT TO EXISTING	EACH	1
	791-06.09	1" PE CONNECT TO EXISTING	EACH	2
	791-06.31	2" STEEL CONNECT TO EXISTING - STOPPLE (LINE STOPPER)	EACH	14
	791-06.32	4" STEEL CONNECT TO EXISTING - STOPPLE (LINE STOPPER)	EACH	2
	791-06.33	6" STEEL CONNECT TO EXISTING - STOPPLE (LINE STOPPER)	EACH	7
(3)	791-07.09	2" STEEL GAS VALVE ASSEMBLY	EACH	2
(3)	791-07.11	6" STEEL GAS VALVE ASSEMBLY	EACH	3
(1)	791-08.08	1" HDPE GAS MAIN (SERVICE)	L.F.	100
(1)	791-08.09	1-1/4" HDPE GAS MAIN (SERVICE)	L.F.	90
(4)	791-10.02	1" CUT AND CAP	EACH	1
(4)	791-10.04	2" CUT AND CAP	EACH	12
(4)	791-10.05	4" CUT AND CAP	EACH	3
(4)	791-10.06	6" CUT AND CAP	EACH	8

FOOTNOTES

(1) INCLUDES ALL MATERIALS INCLUDING SAND/STONE BEDDING, FLOWABLE FILL, TEMPORARY PLACEMENT IN OR OUT OF R.O.W., LABOR, EQUIPMENT FOR COMPLETE INSTALLATION OF PIPE INCLUDING BUT NOT LIMITED TO TRAFFIC CONTROL, EXCAVATION INCLUDING DIRT/ROCK, BACKFILLING, CREEK CROSSINGS PER SWPPP, COUPLINGS, FITTINGS, PIPE FUSION, APPURTENANCES, MAINTAINING THE TRENCH, PURGE POINT INSTALLATION, TESTING BY UTILITY SPECIFICATIONS TO INCLUDE BUT NOT LIMITED TO AIR, NITROGEN, HYDROSTATIC OR X-RAY, DEW POINT OR DRYING, AND ANY OTHER LABOR OR MATERIALS REQUIRED TO COMPLETE THE WORK AS SPECIFIED ON THE PLANS.

(2) INCLUDES ALL MATERIALS, LABOR, EQUIPMENT, AND TRAFFIC CONTROL, INCLUDING BUT NOT LIMITED TO FLUID CONTAINMENT FOR COMPLETE HORIZONTAL DIRECTION DRILLING INSTALLATION OF CASING PIPE OR UNCASED CARRIER PIPE IN BOTH UNCONSOLIDATED SOIL OR ROCK. STEEL PIPE INCLUDES SPECIAL COATING AS SPECIFIED ON PLANS AND SPECS. IF CASING PIPE HAS CARRIER PIPE, THE CARRIER PIPE SHALL BE PAID AT THE OPEN CUT ITEM PRICE.

(3) INCLUDES TRANSITION FITTINGS, VALVES, VALVE BOX, BOX ADJUSTMENT, VALVE BOX COLLAR, VALVE MARKER, EXCAVATION, BEDDING, BACKFILL, COUPLINGS, FUSION TEES, TAP OF EXISTING LINE, AND ALL OTHER NECESSARY MATERIALS AND LABOR FOR COMPLETE INSTALLATION OF ASSEMBLY INCLUDING TRAFFIC CONTROL.

(4) INCLUDES ALL MATERIALS, LABOR, AND EQUIPMENT FOR RETIREMENT OF ITEM INCLUDING STABILIZING THE ITEM OF PLANT PER UTILITY SPECIFICATIONS.

Index Of Sheets

SHEET NO.	SHEET DESCRIPTION
U2-1	QUANTITIES AND INDEX
U2-2	GENERAL NOTES
U2-3	UTILITY EASEMENTS
U2-4	UTILITY LAYOUT
U2-5	UTILITY LAYOUT
U2-6	UTILITY LAYOUT
U2-7	UTILITY LAYOUT
U2-8	UTILITY LAYOUT
U2-9	UTILITY LAYOUT
U2-10	UTILITY LAYOUT
U2-11	UTILITY LAYOUT
U2-12	UTILITY LAYOUT
U2-13	UTILITY LAYOUT
U2-14	UTILITY LAYOUT
U2-15	UTILITY LAYOUT
U2-16	CONSTRUCTION DETAILS
U2-17	CROSS SECTIONS

UTILITY INFORMATION

GREATER DICKSON GAS AUTHORITY
605 EAST WALNUT STREET
DICKSON, TN 37055
ROBERT DURHAM, MANAGER
(615) 441-2830
rdurham@gdga.com

LEGEND

PROPOSED	—X" G—
REMAIN	– –X" G– –
ABANDON OR REMOVE	– –X" G– –
TEMPORARY	—TEMP/G—

08-15-14

COORDINATES ARE NAD/83(1995), ARE DATUM ADJUSTED BY THE FACTOR OF 1.000030 AND TIED TO THE TGRN. ALL ELEVATIONS ARE REFERENCED TO THE NAVD 1988.

GREATER DICKSON GAS AUTHORITY

NATURAL GAS RELOCATION

QUANTITIES AND INDEX

$$$$SYTIME$$$$$$
$$$$DGNSPEC$$$

TENNESSEE D.O.T.
DESIGN DIVISION

FILE NO.

TYPE	YEAR	PROJECT NO.	SHEET NO.
CONST.	2014	22004-3246-14	U2-2

DICKSON COUNTY

GENERAL NOTES TO CONTRACTOR:

STANDARD UTILITY NOTES:

1. EXCEPT FOR EROSION AND SEDIMENT CONTROL ITEMS, NO ROADWAY OR BRIDGE ITEMS SHALL BE UTILIZED TO COMPENSATE FOR WORK METHODS OR MATERIALS ASSOCIATED WITH AND/OR SPECIFIED FOR THE UTILITY INSTALLATION, EVEN THOUGH THE SAME OR SIMILAR ROADWAY OR BRIDGE MATERIALS MAY HAVE BEEN CALLED FOR IN THE UTILITY SPECIFICATIONS OR DRAWINGS.
2. ALL MATERIALS, METHODS, AND/OR INTEGRAL MATERIALS OUTLINED IN THE UTILITY SPECIFICATIONS OR DRAWINGS NECESSARY TO PROVIDE A COMPLETE AND FUNCTIONAL INSTALLATION MUST BE INCLUDED IN THE UNIT PRICE FOR THE ASSOCIATED UTILITY WORK ITEM.
3. THE CONTRACTOR MUST MAINTAIN ALL SERVICES DURING THE CONSTRUCTION OF THE RELOCATED FACILITY. ANY COSTS ASSOCIATED WITH INSTALLATION OF REQUIRED TEMPORARY SERVICE LINES DUE TO THE ROADWAY CONSTRUCTION SEQUENCE OF WORK (I.E., CUTS, FILLS, PHASING, ETC.) SHALL BE INCLUDED IN THE COST OF THE PERMANENT UTILITY ITEMS.
4. IT SHALL BE THE RESPONSIBILITY OF THE PRIME CONTRACTOR'S SURVEYOR TO LAY OUT ALL THE FACILITIES BEING RELOCATED WITHIN THE CONTRACT.
5. FOR BURIED UTILITIES, THE PRIME CONTRACTOR OR HIS SUBCONTRACTOR SHALL BE REQUIRED TO PROVIDE TO THE UTILITY UPON COMPLETION OF THE UTILITY'S RELOCATION WORK A SET OF AS-BUILT DRAWINGS FOR THEIR RECORDS. THESE AS-BUILT DRAWINGS SHOULD BE PREPARED AS THE JOB PROGRESSES TO ENSURE THEIR ACCURACY.
6. WHERE EROSION CONTROL MEASURES ARE NEEDED FOR THE UTILITY RELOCATION WORK OCCURRING INSIDE OR OUTSIDE STATE RIGHT-OF-WAY, THE CONTRACTOR SHALL SUBMIT TO THE TDOT PROJECT SUPERVISOR FOR APPROVAL A PROPOSED EROSION AND SEDIMENT CONTROL PLAN PRIOR TO BEGINNING THE WORK. TDOT APPROVAL MUST BE RECEIVED BEFORE THE EROSION CONTROL PAY ITEMS FOR ROADWAY CONSTRUCTION CAN BE USED FOR ANY ADDITIONAL EROSION CONTROL MEASURES REQUIRED FOR THE UTILITY RELOCATION WORK.
7. DRIVEWAY, SIDEWALK AND ROADWAY TEMPORARY RESTORATION SHALL BE PART OF THE IN-PLACE COST OF PLACING THE UTILITY ITEM WITHIN THE ROW.
8. ANY EXCAVATION OF THE STREAM CHANNEL AREA SHALL BE SEPARATED FROM FLOWING WATER AND ACCOMPLISHED DURING LOW FLOW CONDITIONS. THIS SHALL BE ACCOMPLISHED BY THE USE OF FLUMES, LINED DIVERSION CHANNEL WITH SANDBAG BERM, DIVERSION PIPE WITH SANDBAG DAM AT PIPE INLET, OR IN SOME CASES COFFERDAMS. ALTERNATIVELY, BASED ON FIELD CONDITIONS AND CONTRACTOR SELECTION, THE UTILITY RELOCATION MAY BE ACCOMPLISHED USING BORE TECHNOLOGY WITH NO STREAM CHANNEL IMPACTS

DAMAGES TO EXISTING UTILITIES:

1. REPAIRS AND/OR REPLACEMENTS TO ANY UTILITIES DAMAGED BY CONSTRUCTION SHALL BE THE RESPONSIBILITY OF THE CONTRACTOR. NO ADDITIONAL PAYMENT WILL BE ALLOWED.

GENERAL NOTES:

1. CONTRACTOR SHALL GIVE AFFECTED PROPERTY OWNERS TWO WEEKS NOTICE PRIOR TO CUTTING FENCES.
2. ANY DAMAGE TO PROPERTY, INCLUDING FENCES, SHALL BE CORRECTED TO THE SATISFACTION OF THE PROPERTY OWNERS BY THE CONTRACTOR, AT THE CONTRACTOR'S EXPENSE.
3. THE CONTRACTOR SHALL PROVIDE ALL NECESSARY PROTECTIVE MEASURES TO SAFEGUARD EXISTING UTILITIES FROM DAMAGE DURING CONSTRUCTION OF THIS PROJECT. IN THE EVENT THAT SPECIAL EQUIPMENT IS REQUIRED TO WORK OVER AND AROUND THE UTILTIES, THE CONTRACTOR WILL BE REQUIRED TO FURNISH SUCH EQUIPMENT. THE COST OF PROTECTING UTILITIES FROM DAMAGE AND FURNISHING SPECIAL EQUIPMENT WILL BE INCLUDED IN THE PRICE BID FOR OTHER ITEMS OF CONSTRUCTION.
4. ALL WORK SHALL BE ACCOMPLISHED IN ACCORDANCE WITH ALL LOCAL, STATE AND FEDERAL LAWS AND REGULATIONS. IN THE EVENT OF A CONFLICT BETWEEN THE REGULATIONS, THE MORE STRINGENT SHALL APPLY.
5. THE OWNER OR THE OWNER'S REPRESENTATIVE SHALL BE SOLELY RESPONSIBLE FOR INTERPRETATION OF THE CONSTRUCTION PLANS. IN THE EVENT OF AN AMBIGUITY, THE CONTRACTOR SHALL CONTACT THE OWNER OR THE OWNER'S REPRESENTATIVE FOR CLARIFICATION.
6. PRIOR TO BEGINNING ANY EXCAVATION OR GRADING, THE CONTRACTOR SHALL DETERMINE THE ACTUAL LOCATIONS OF ANY UNDERGROUND UTILITIES IN THE VICINITY OF THE PROPOSED WORK. ANY CONFLICTS WITH UTILITIES, ABOVE OR UNDERGROUND, SHALL BE RESOLVED WITH THE UTILITY OWNER. ANY CONTRACTOR-CAUSED DAMAGE TO EXISTING OR NEW UTILITIES SHALL BE REPAIRED BY THE CONTRACTOR AT NO ADDITIONAL EXPENSE TO THE OWNER OR DEVELOPER.
7. THE CONTRACTOR SHALL BE RESPONSIBLE FOR HIS OWN SURVEYS, ESTABLISH LINES AND GRADES AND PERFORM ANY SUCH FIELD SURVEY AS NECESSARY FOR THE COMPLETION OF EACH ITEM OF WORK. THE CONTRACTOR SHALL PROVIDE ONE COPY OF ALL FIELD SURVEY NOTES TO THE OWNER OR THE OWNER'S DESIGNATED REPRESENTATIVE.
8. THE CONTRACTOR IS RESPONSIBLE FOR OBTAINING ALL LOCAL PERMITS AND SCHEDULING ALL REVIEWS BY THE LOCAL CODES ENFORCEMENT OFFICER.
9. THE CONTRACTOR SHALL COMPLY WITH ALL PROVISIONS OF ALL REGULATORY PERMITS FOR THE PROJECT. WHETHER SUCH PERMIT WAS OBTAINED BY THE CONTRACTOR OR THE OWNER. THE CONTRACTOR AND OWNER SHALL ENSURE THAT BOTH PARTIES HAVE COPIES OF ALL REGULATORY PERMITS.
10. THE CONTRACTOR SHALL CLEAR ONLY SUCH AREA AS IS NECESSARY TO CONSTRUCT SPECIFIC ITEMS OF WORK, OR SUCH ADDITIONAL AREAS AS MAY BE PERMITTED BY THE OWNER. THE CONTRACTOR SHALL BE RESPONSIBLE FOR THE DISPOSAL OF ALL TREES, BRUSH, STUMPS, ROOTS AND OTHER ORGANIC MATERIALS REMOVED FROM THE CONSTRUCTION AREA. DISPOSAL SHALL BE ACCOMPLISHED ONLY BY LOCALLY APPROVED MEANS.
11. THE CONTRACTOR SHALL BE RESPONSIBLE FOR TRAFFIC CONTROL ADJACENT TO THE CONSTRUCTION SITE. NO INTERRUPTION OF PUBLIC TRAFFIC FLOW WILL BE ACCEPTED. THE CONTRACTOR SHALL MAINTAIN ACCESS TO ADJACENT PROPERTIES AND FACILITIES WHEN SUCH ACCESS PREVIOUSLY EXISTED ACROSS THE PROJECT AREA. TRAFFIC CONTROL SHALL CONSIST OF SUCH SIGNS, BARRICADES, BARRIERS, BYPASSES, DETOURS OR OTHER MEASURES ERECTED AND MAINTAINED BY THE CONTRACTOR FOR THE DURATION OF THE PROJECT AND COMPLY WITH MUTCD, CURRENT EDITION.
12. THE CONTRACTOR IS TO CHECK AND VERIFY ALL MEASUREMENTS, DIMENSIONS, PLAN ELEVATIONS, INVERTS, ETC. BEFORE ORDERING MATERIALS AND PROCEEDING WITH THE WORK AND IS RESPONSIBLE FOR THE SAME. REMEDIAL WORK RESULTING FROM LACK OF VERFICATION WILL BE AT CONTRACTOR'S SOLE EXPENSE.
13. THE CONTRACTOR WILL BE HELD RESPONSIBLE FOR THE DAMAGE OR LOSS OF ANY REFERENCE POINTS AND HUBS DURING THE CONSTRUCTION OF HIS WORK, AND SHALL BEAR THE COST OF REPLACING SAME.
14. CARE SHALL BE TAKEN TO PROTECT ANY UTILITIES, TREES, ETC. WHICH ARE TO REMAIN AND NOT TO BE DISTURBED BY THE CONSTRUCTION. THE CONTRACTOR SHALL BE RESPONSIBLE FOR ANY DAMAGES TO SUCH PROPERTY.
15. THE CONTRACTOR ACKNOWLEDGES AND AGREES THAT THE WORK IS ENTIRELY AT HIS RISK UNTIL SITE IS ACCEPTED, AND HE WILL BE HELD RESPOSIBLE FOR ITS SAFETY BY THE OWNER. THE CONTRACTOR WILL INDEMNIFY THE OWNER AND ENGINEER FROM LIABILITY AT THE SITE THROUGHOUT THE CONSTRUCTION PROCESS.
16. THE CONTRACTOR SHALL PROVIDE SUCH BRACING, SHEETING AND SHORING, BLASTING PROTECTION, WARNING LIGHTS AND BARRICADES, ETC. AS MAY BE NECESSARY FOR THE PROTECTION OF LIFE AND PROPERTY FOR HIS OWN EMPLOYEES AND THE GENERAL PUBLIC. THE CONTRACTOR SHALL COMPLY WITH ALL APPLICABLE SAFETY STATUTES AND RULES REQUIRING CERTAIN PROTECTIVE PERSONAL APPAREL SUCH AS HARD HATS, EAR PLUGS, EYE SHIELDS, PROTECTIVE SHOES, ETC. THE OWNER AND ENGINEER ASSUME NO RESPONSIBLIITY OR LIABILITY FOR ACTIONS TAKEN BY THE CONTRACTOR WHICH ENDANGER LIFE OR PROPERTY.
17. ANY FOREIGN ITEM FOUND DURING CONSTRUCTION IS THE PROPERTY OF THE OWNER. THIS INCLUDES, BUT IS NOT LIMITED TO, PRECIOUS METALS, COINS, PAPER CURRENCY, ARTIFACTS AND ANTIQUITIES.
18. EMBANKMENTS SHALL BE CONSTRUCTED SUCH THAT ADEQUATE SURFACE DRAINAGE IS PROVIDED AT ALL TIMES.
19. FILL AREAS SHALL BE COMPACTED BY APPROVED MEANS TO A DENSITY OF NOT LESS THAN 98% OF OPTIMUM DENSITY.
20. FILL MATERIALS SHALL BE PLACED IN LIFTS NO GREATER THAN EIGHT INCHES IN THICKNESS. STONE LARGER THAN 18 INCHES DIAMETER SHALL BE PLACED IN FILL.
21. BLASTING WILL NOT BE ALLOWED IN THIS PROJECT.
22. UNIT PRICES FOR THE PROPOSED GAS LINE SHOULD INCLUDE LABOR, EQUIPMENT, INSURANCE, OVERHEAD AND PROFIT. ALL MATERIALS OTHER THAN INCIDENTAL MATERIAL WILL BE PROVIDED BY THE UTILITY OWNER. SEE PROVIDED MATERIALS LIST, THIS SHEET.
23. NON-PAY ITEMS: ONLY ITEMS SHOWN ON THE BID AS PAY ITEMS WILL BE PAID FOR. COMPENSATION FOR ALL LABOR, MATERIALS, TOOLS, EQUIPMENT AND INCIDENTALS FOR THE ENTIRE CONTRACT SHALL BE INCLUDED IN THE PRICE BID FOR PAY ITEMS.
24. NO ITEM QUANTITIES IN BIDDERS PROPOSAL WILL BE ADJUSTED AFTER RECEIPT OF BIDS UNLESS CONCURRED BY OWNER. CONTRACTOR IS ENCOURAGED TO CHECK QUANTITIES IN BIDDERS PROPOSAL PRIOR TO SUBMITTING BID. ANY DISCREPANCIES FOUND BY THE CONTRACTOR SHOULD BE BROUGHT TO THE ATTENTION OF THE ENGINEER AS SOON AS POSSIBLE AND IN ALL CASES PRIOR TO THE OPENING OF BIDS.
25. THE CONTRACTOR SHALL NOTIFY EACH INDIVIDUAL UTILITY OWNER OF HIS PLAN OF OPERATION IN THE AREA OF THE UTILITIES PRIOR TO COMMENCING WORK, THE CONTRACTOR SHALL CONTACT THE UTILITY OWNERS AND REQUEST THEM TO PROPERLY LOCATE TGHEIR RESPECTIVE UTILITY ON THE GROUND. THIS NOTIFICATION SHALL BE GIVEN AT LEAST TEN (10) BUSINESS DAYS PRIOR TO COMMENCEMENT OF OPERATIONS AROUND THE UTILITY. TENNESSEE ONE CALL SHALL BE CONTACTED TO ASSIST IN UTILITY LOCATION.

FINAL DRESSING, SEEDING AND SODDING:

1. FINAL DRESSING, SEEDING AND/OR SODDING SHALL BE PERFORMED ON ALL DISTURBED AREAS WITH CLOSE CONFORMITY TO THE LINES AND GRADES INDICATED ON THE CONSTRUCTION PLANS OR AS DIRECTED BY THE CODES ENFORCEMENT OFFICER. ALL AREAS DISTURBED BY CONSTRUCTION THAT ARE NOT SUBJECT TO PAVING OR OTHER PERMANENT SURFACE TREATMENT, SHALL BE RESTORED BY FINAL DRESSING AND SEEDING OR SODDING AS APPROPRIATE TO THE LANDSCAPE.
2. AREAS OUTSIDE THE CONSTRUCTION LIMITS THAT ARE DISTURBED BY THE CONTRACTOR SHALL BE RESTORED BY THE CONTRACTOR AT NO ADDITIONAL EXPENSE TO THE OWNER.
3. AFTER DESIGNATED AREAS HAVE BEEN CAREFULLY GRADED, SOIL SHALL BE PREPARED TO RECEIVE FERTILIZER AND SEED OR SOD. FERTILIZER SHALL BE A STANDARD COMMERCIAL FERTILIZER GRADE 15-15-15 APPLIED AT A RATE OF NOT LESS THAN 10 POUNDS PER 1,000 SQUARE FEET. AN ALTERNATE FERTILIZER MAY BE APPROVED BY THE OWNER UPON RECOMMENDATION BY A RECOGNIZED AUTHORITY. THE FERTILIZER SHALL BE LIGHTLY HARROWED, RAKED OR OTHERWISE INCORPORATED INTO THE SOIL TO A DEPTH OF APPROXIMATELY 1/2 INCH.
4. THE SEED SHALL BE AS FOLLOWS:

NAME	% BY WEIGHT
LESPEDEZA	20
SERICEA LESPEDEZA	15
KENTUCKY 31 FESCUE	40
ENGLISH RYE	15
WHITE DUTCH CLOVER	5
WEEPING LOVE GRASS	5
OR	
KENTUCKY 31 FESCUE	55
REDTOP	15
ENGLISH RYE	20
WHITE DUTCH CLOVER	5
WEEPING LOVE GRASS	5

5. THE OWNER RESERVES THE RIGHT TO NAME ANOTHER GRASS SEED MIXTURE APPROPRIATE TO THE NATURE OF THE DEVELOPMENT.
6. SOD WHICH FAILS TO TAKE, OR GRASS WHICH FAILS TO GERMINATE SUFFICIENTLY, SHALL BE REPAIRED BY THE CONTRACTOR AT NO ADDITIONAL EXPENSE TO THE OWNER.

EROSION AND SEDIMENT CONTROL NOTES:

1. NO WORK IS TO COMMENCE WITHOUT A PERMIT ISSUED BY THE APPROPRIATE REGULATORY AUTHORITY.
2. THE CONTRACTOR SHALL COMPLY WTH APPLICABLE PROVISIONS OF ALL REGULATORY PERMITS.
3. THE CONTRACTOR SHALL BE RESPONSIBLE FOR INSTALLING EROSION AND SEDIMENT CONTROL MEASURES AND IMPLEMENTING THE SWPPP AND MITIGATION PLANS.
4. ALL DISTURBED AREAS SHALL BE PROPERLY STABILIZED AS SOON AS PRACTICAL.
5. EROSION AND SEDIMENT CONTROL MEASURES SHALL BE INSTALLED CONCURRENT WITH CLEARING OPERATIONS, AND SHALL BE FUNCTIONAL PRIOR TO ANY EARTH MOVING OPERATIONS.
6. PRIOR TO THE START OF EXCAVATION OPERATIONS ON THE SITE, ALL EROSION CONTROL DEVICES SHALL BE IN PLACE.
7. CONSTRUCTION SHALL BE SEQUENCED TO MINIMIZE THE EXPOSURE TIME OF GRADED SOIL AREAS AND SHALL BE PHASED FOR PROJECTS THAT HAVE OVER 50 ACRES OF SOIL DISTURBANCE. HOWEVER, PRIORITY SHALL BE GIVEN TO FINISHING OPERATIONS AND PERMANENT EROSION CONTROL MEASURES OVER TEMPORARY EROSION CONTROL MEASURES.
8. INSPECTION AND MAINTENANCE OF STRUCTURES IS TO BE PERFORMED ON A REGULAR BASIS AND SEDIMENT SHALL BE REMOVED FROM SEDIMENT CONTROL STRUCTURES WHEN THE DESIGN CAPACITY HAS BEEN REDUCED BY FIFTY PERCENT. DURING SEDIMENT REMOVAL, THE CONTRACTOR SHALL TAKE CARE TO ENSURE THAT STRUCTURAL COMPONENTS OF EROSION CONTROL STRUCTURES ARE NOT DAMAGED AND THUS MADE INEFFECTIVE. IF DAMAGE DOES OCCUR, THE CONTRATOR SHALL REPAIR THE STRUCTURES AT THE CONTRACTOR'S OWN EXPENSE.
9. THE CONTRACTOR SHALL ESTABLISH AND MAINTAIN A PROACTIVE METHOD TO PREVENT THE OFF-SITE MIGRATION OR DEPOSIT OF SEDIMENT ON ROADWAYS USED BY THE GENERAL PUBLIC.
10. SOIL MATERIALS MUST BE PREVENTED FROM ENTERING WATERS OF THE STATE/U.S. EROSION AND SEDIMENTATION CONTROL MEASURES TO PROTECT WATER QUALITY MUST BE MAINTAINED THROUGHOUT THE CONSTRUCTION PERIOD. HAY BALES AND/OR SILT FENCE MUST BE INSTALLED ALONG THE BASE OF ALL FILLS AND CUTS, ON THE DOWNHILL SIDE OF STOCKPILED SOIL, AND ALONG STREAM BANKS IN CLEARED AREAS TO PREVENT SEDIMENT MIGRATION INTO STREAMS. THEY MUST BE INSTALLED ON THE CONTOUR, ENTRENCHED AND STAKED, AND EXTEND THE WIDTH OF THE AREA TO BE CLEARED.
11. PERMANENT EROSION CONTROL MEASURES SHALL BE INITIATED WITHIN 15 CALENDAR DAYS AFTER FINAL GRADING.
12. THE CONTRACTOR SHALL ESTABLISH AND MAINTAIN A PROACTIVE METHOD TO PREVENT LITTER, CONSTRUCTION DEBRIS, AND CONSTRUCTION CHEMICALS FROM ENTERING WATERS OF THE STATE/U.S.
13. THE CONTRACTOR SHALL TAKE APPROPRIATE STEPS TO ENSURE THAT PETROLEUM PRODUCTS OR OTHER CHEMICAL POLLUTANTS ARE PREVENTED FROM ENTERING WATERS OF THE STATE/U.S. ALL EQUIPMENT REFUELING, SERVICING, AND STAGING AREAS SHALL COMPLY WITH ALL LOCAL, STATE, AND FEDERAL LAWS, RULES, REGULATIONS, AND ORDINANCES: INCLUDING THOSE OF THE NATIONAL FIRE PROTECTION ASSOCIATION (NFPA). APPROPRIATE CONTAINMENT MEASURES FOR THSES AREAS SHALL BE UTILIZED. ALL SPILLS MUST BE REPORTED TO THE APPROPRIATE AGENCY, AND MEASURES SHALL BE TAKEN IMMEDIATELY TO PREVENT THE POLLUTION OF WATERS OF THE STATE/U.S., INCLUDING GROUNDWATER, SHOULD A SPILL OCCUR.
14. ANY DISAGREEMENT BETWEEN THE PROJECT PLANS, THE PROJECT AS CONSTRUCTED AND THE PERMIT OR PERMITS ISSUED FOR THE PROJECT, SHALL BE BROUGHT TO THE ATTENTION OF THE OWNER. IN GENERAL, PERMIT CONDITIONS WILL PREVAIL.

SPECIAL NOTES:

1. ALL STEEL GAS PIPE SHALL BE SCHEDULE 40 AND X-42 GRADE. ALL UNDERGROUND PIPING WILL BE COATED WITH FUSION BONDED EPOXY NO LESS THAN 14 MILS IN THICKNESS. PIPES INSTALLED BY BORE WILL BE COATED WITH POWERCRETE R-60 NO LESS THAN 40 MILS IN THICKNESS.
2. THE TOP OF ALL GAS LINES SHALL BE INSTALLED AT A MINIMUM DEPTH OF 36 INCHES BELOW POST-GRADED SURFACE, UNLESS OTHERWISE INDICATED.
3. ALL INSTALLED LINES, INCLUDING SERVICE CONNECTIONS, SHALL BE PRESSURE TESTED AND CHART RECORDED FOR 24 HOURS AT 375 PSIG. THE SUPERVISOR OF THE PRESSURE TEST SHALL SIGN AND DATE THE CHART AND FORM AFTER THE LINE HAS BEEN TESTED SUCCESSFULLY IN ACCORDANCE WITH THE REQUESTS OF GREATER DICKSON GAS AUTHORITY.
4. LEAK TESTS OF ALL INSTALLED LINES, INCLUDING SERVICE LINES, SHALL BE PERFORMED IF THE PRESSURE TEST FAILS. ALL LEAKS SHALL BE FIXED PRIOR TO RESUMING PRESSURE TESTS.
5. INSTALLATION OF ALL PIPE, VALVES, METERS, REGULATORS, TEES AND ALL OTHER HARDWARE SHALL BE IN ACCORDANCE WITH 49 CFR 192.
6. ALL OCCUPANTS IN THE SURROUNDING BUILDINGS ARE TO BE NOTIFIED OF THE CONSTRUCTION SCHEDULE FOR THE PIPE REPLACEMENT.
7. CONTRACTOR TO INSTALL FITTINGS AS REQUIRED.
8. CONTRACTOR WILL BE RESPONSIBLE FOR VERIFYING THAT THE OWNER HAS LOCATED ALL UTILITIES IN THE AFFECTED AREA, REQUESTING ANY OTHER NECESSARY UTILITY LOCATIONS WHILE THE OWNER IS PRESENT, AND DOCUMENTING AND MAINTAINING UTILITY LOCATIONS THROUGHOUT THE CONSTRUCTION PROCESS.
9. PIPES SHALL BE BEDDED ON A FOUR INCH LAYER OF DIRT, LIMESTONE DUST OR SAND AND BACKFILLED TO A DEPTH OF 30% OF THE DIAMETER OF THE PIPE. CLASS B BEDDING SHALL BE SIZE NO. 7. CUTS IN EXISTING ROADWAYS SHALL BE BACKFILLED TO THE DEPTH OF THE CUT WITH NO. 7 STONE.
10. GREATER DICKSON GAS AUTHORITY REPRESENTATIVE, NOTIFIED BY THE CONTRACTOR, WILL VIEW AND DOCUMENT EXISTING UTILITY LOCATIONS. CONTRACTOR WILL BE RESPONSIBLE FOR VERIFYING ALL UTILITIES IN THE AFFECTED AREA, REQUESTING ANY OTHER UTILITY LOCATIONS WHILE THE OWNER IS PRESENT & DOCUMENTING AND MAINTAINING UTILITY LOCATIONS THROUGHOUT THE CONSTRUCTION PROCESS.
11. LOCATOR TAPE AND TRACER WIRE SHALL BE INSTALLED PER THE PROJECT MANUAL SPECIFICATIONS ALONG ALL NEW GAS LINES.
12. FACILITIES TO BE ABANDONED OR REMOVED SHALL BE DISCONNECTED FROM ALL POTENTIAL SOURCES OF GAS. ASSOCIATED VALVES SHALL BE LOCKED & TAGGED CLOSED. ABANDONED PIPELINES SHALL BE PURGED OF NATURAL GAS. IF AIR IS USED AS A PURGING MEDIUM, PRECAUTIONS SHALL BE TAKEN TO ENSURE THAT A COMBUSTIBLE MIXTURE IS NOT PRESENT DURING OR AFTER PURGING. AFTER PURGING, THE ABANDONED PIPELINE MUST BE SEALED AT BOTH ENDS. PHYSICALLY REMOVE ALL ABANDONED FACILITIES IF PRACTICAL. IF THIS IS NOT FEASIBLE, SEVER BELOW GRADE AND REMOVE ALL ABOVE GROUND PIPING AND EQUIPMENT.

AREA OF DISTURBANCE:

10' WIDTH X 3,455' LENGTH = 34,550 SQ. FT.
0.79 AC < 1 AC

SCOPE OF WORK:

THE SCOPE OF THE WORK REQUIRED UNDER THIS CONTRACT INCLUDES FURNISHING AND PAYING FOR ALL NECESSARY LABOR, TOOLS AND OTHER ITEMS AND CONSTRUCTING NATURAL GAS MAIN RELOCATION CONSISTING OF THE INSTALLATION OF 1" HDPE, 1-1/4" HDPE, 2" STEEL AND HDPE, 4" STEEL, AND 6" STEEL GAS LINES AND SERVICES. ALL PRICING IS TO INCLUDE THE COST OF CLEARING THE RIGHT-OF-WAY, INSTALLATION OF ANY RIP-RAP, SILT FENCE, SEED, STRAW AND FERTILIZER.

THE WORK ALSO INCLUDES HYDROSTATIC AND/OR OTHER TESTING AND OTHER APPURTENANCES COMPLETE IN EVERY DETAIL AND READY FOR THE OWNER'S BENEFICIAL USE AS INDICATED ON THE CONTRACT DRAWINGS OR LISTED ELSEWHERE IN THE CONTRACT SPECIFICATIONS. THIS CONTRACT WILL CONSIST GENERALLY OF, BUT SHALL NOT BE LIMITED TO, THE FOLLOWING: EROSION CONTROL, GAS LINE AND APPURTENANCES, TESTING AND PURGING, AND COORDINATION WITH PHCPUD FOR ALL CONNECTIONS WITH EXISTING GAS LINES. CONTRACTOR WILL BE RESPONSIBLE FOR THE PICKUP AND DELIVERY OF ALL CONSTRUCTION MATERIALS TO THE JOB SITE.

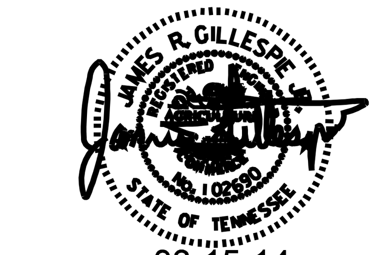

08-15-14

COORDINATES ARE NAD/83(1995), ARE DATUM ADJUSTED BY THE FACTOR OF 1.000030 AND TIED TO THE TGRN. ALL ELEVATIONS ARE REFERENCED TO THE NAVD 1988.

GREATER DICKSON GAS AUTHORITY

NATURAL GAS RELOCATION

GENERAL NOTES

SYTIME / DGNSPEC

TENNESSEE D.O.T.
DESIGN DIVISION

FILE NO.

TYPE	YEAR	PROJECT NO.	SHEET NO.
CONST.	2014	22004-3246-14	U2-3

DICKSON COUNTY

UTILITY EASEMENTS

TRACT NO.	PROPERTY OWNER(S)	COUNTY RECORDS				TOTAL AREA (ACRES)	LENGTH OF LINE ACROSS PARCEL (LINEAR FEET)	EASEMENT (SQUARE FEET)	
		TAX MAP NO.	PARCEL NO.	DEED DOCUMENT REFERENCE					
				BOOK	PAGE			PERMANENT	PERM. & TEMP.
1	TRISTAR BANK	110D-D	003.00	605	246	3.530	125	1,250	2,500
2	CORNERSTONE II, LLC	110D-D	004.08	902	755	2.021	320	3,200	6,400
11	DICKSON HIGH SCHOOL	110D-D	008.00	-	-	17.834	100	1,000	2,000
16	AUTOZONE, INC., A NEVADA CORPORATION	110E-F	012.01	408	89	1.090	80	800	1,600
22	PINNACLE NATIONAL BANK	110	065.09	977	849	0.911	200	2,000	4,000
23	FLOYD E. ALBRIGHT, JR. AND WIFE, ANDREA H. ALBRIGHT	110	065.32	133	131	0.446	20	200	400
A	CEMETARY	110E-E	028.00	-	-	3.2	75	750	1,500
B	WESTERN 46 PROPERTIES, LLC	111	205.00	890	928	1.53	150	1,500	3,000
C	ARCITERRA VN DICKSON TN, LLC	120	003.27	875	648	0.92	75	750	1,500
D	LAUREN L. JONES	111A-B	010.00	1,168	48	1.25	120	1,200	2,400

08-15-14

COORDINATES ARE NAD/83(1995), ARE DATUM ADJUSTED BY THE FACTOR OF 1.000030 AND TIED TO THE TGRN. ALL ELEVATIONS ARE REFERENCED TO THE NAVD 1988.

GREATER DICKSON
GAS AUTHORITY

NATURAL GAS
RELOCATION

UTILITY
EASEMENTS

$$$$SYTIME$$$$$$
$$$$DGNSPEC$$$

TYPE	YEAR	PROJECT NO.	SHEET NO.
CONST.	2014	22004-3246-14	U2-4

DICKSON COUNTY

CONTROL POINTS

POINT	NORTH	EAST	ELEV.	STATION	OFFSET	DESCRIPTION
S5	635723.7001	1560845.8114	780.673	400+46.79	42.61	ALUM DISK
S6	636098.8606	1561134.8005	780.185	398+71.72	495.19	ALUM DISK
S7	635543.0891	1561622.2140	808.057	392+41.49	-37.73	ALUM DISK

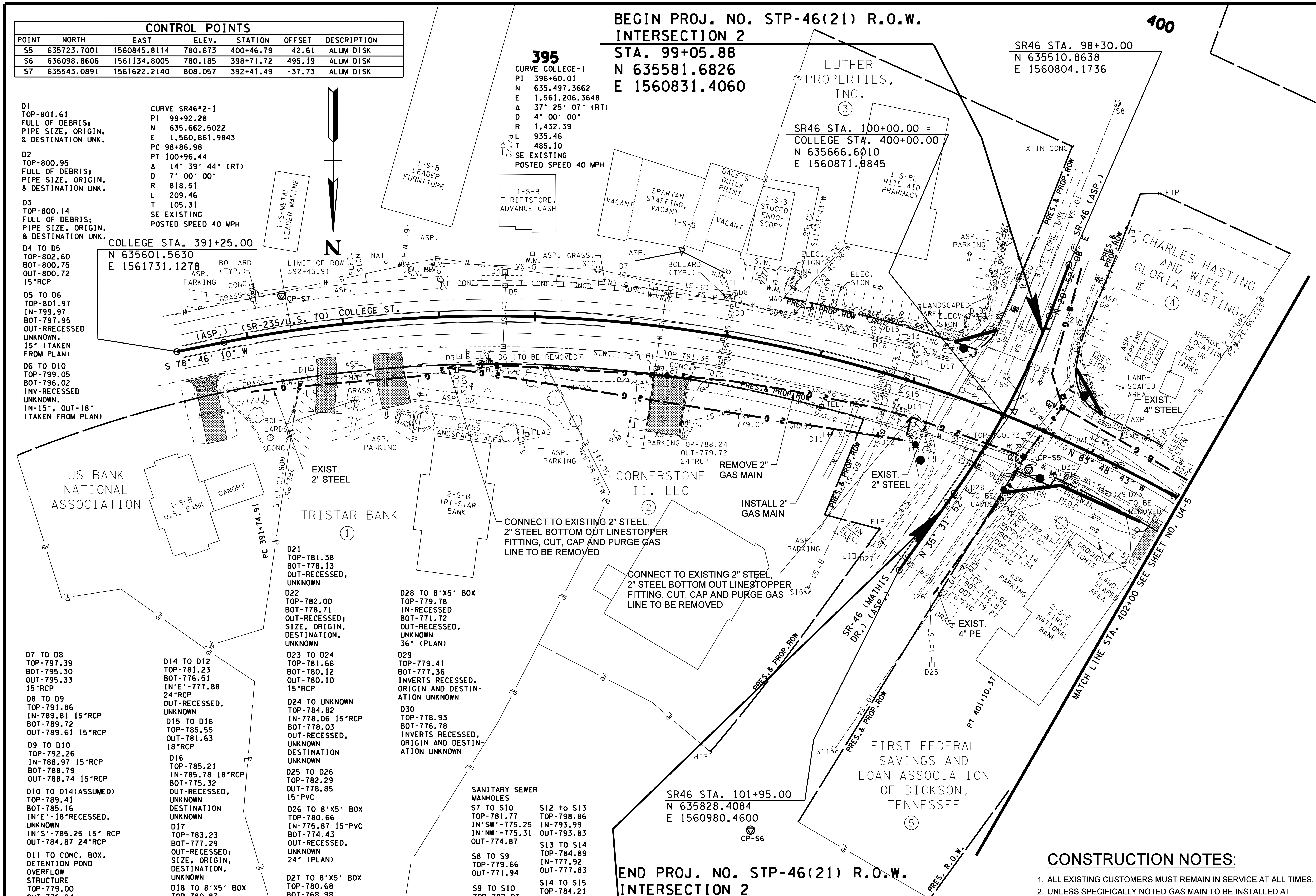

D1
TOP-801.61
FULL OF DEBRIS;
PIPE SIZE, ORIGIN,
& DESTINATION UNK.

D2
TOP-800.95
FULL OF DEBRIS;
PIPE SIZE, ORIGIN,
& DESTINATION UNK.

D3
TOP-800.14
FULL OF DEBRIS;
PIPE SIZE, ORIGIN,
& DESTINATION UNK.

D4 TO D5
TOP-802.60
BOT-800.75
OUT-800.72
15"RCP

D5 TO D6
TOP-801.97
IN-799.97
BOT-797.95
OUT-RRECESSED
UNKNOWN.
15" (TAKEN
FROM PLAN)

D6 TO D10
TOP-799.05
BOT-796.02
INV-RECESSED
UNKNOWN.
IN-15", OUT-18"
(TAKEN FROM PLAN)

D7 TO D8
TOP-797.39
BOT-795.30
OUT-795.33
15"RCP

D8 TO D9
TOP-791.86
IN-789.81 15"RCP
BOT-789.72
OUT-789.61 15"RCP

D9 TO D10
TOP-792.26
IN-788.97 15"RCP
BOT-788.79
OUT-788.74 15"RCP

D10 TO D14(ASSUMED)
TOP-789.41
BOT-785.16
IN'E'-18"RECESSED,
UNKNOWN
IN'S'-785.25 15" RCP
OUT-784.87 24"RCP

D11 TO CONC. BOX.
DETENTION POND
OVERFLOW
STRUCTURE
TOP-779.00
OUT-776.94

D12 TO CONC. BOX
TOP-778.68
IN'W'-775.28 15"RCP
IN'S'-771.29 24"RCP
BOT-771.39
OUT'E'-771.31 CUT OUT
HOLE INTO CONC. BOX

D13 TO D12
TOP-780.11
BOT-777.80
OUT-RECESSED,
UNKNOWN

D14 TO D12
TOP-781.23
BOT-776.51
IN'E'-777.88
24"RCP
OUT-RECESSED,
UNKNOWN

D15 TO D16
TOP-785.55
OUT-781.63
18"RCP

D16
TOP-785.21
IN-785.78 18"RCP
BOT-775.32
OUT-RECESSED,
UNKNOWN
DESTINATION
UNKNOWN

D17
TOP-783.23
BOT-777.29
OUT-RECESSED;
SIZE, ORIGIN,
DESTINATION,
UNKNOWN

D18 TO 8'X5' BOX
TOP-780.87
BOT-775.05
OUT-775.10 24"RCP

D19
TOP-782.38
BOT-778.57
OUT-778.53 15"RCP
DESTINATION
UNKNOWN

D20 TO 8'X5' BOX
TOP-780.38
BOT-777.20
OUT-24"RCP

D21
TOP-781.38
BOT-778.13
OUT-RECESSED,
UNKNOWN

D22
TOP-782.00
BOT-778.71
OUT-RECESSED;
SIZE, ORIGIN,
DESTINATION,
UNKNOWN

D23 TO D24
TOP-781.66
BOT-780.12
OUT-780.10
15"RCP

D24 TO UNKNOWN
TOP-784.82
IN-778.06 15"RCP
BOT-778.03
OUT-RECESSED,
UNKNOWN
DESTINATION
UNKNOWN

D25 TO D26
TOP-782.29
OUT-778.85
15"PVC

D26 TO 8'X5' BOX
TOP-780.66
IN-775.87 15"PVC
BOT-774.43
OUT-RECESSED,
UNKNOWN
24" (PLAN)

D27 TO 8'X5' BOX
TOP-780.68
BOT-768.98
OUT-RECESSED,
UNKNOWN
24" (PLAN)

D28 TO 8'X5' BOX
TOP-779.78
IN-RECESSED
BOT-771.72
OUT-RECESSED,
UNKNOWN
36" (PLAN)

D29
TOP-779.41
BOT-777.36
INVERTS RECESSED,
ORIGIN AND DESTIN-
ATION UNKNOWN

D30
TOP-778.93
BOT-776.78
INVERTS RECESSED,
ORIGIN AND DESTIN-
ATION UNKNOWN

SANITARY SEWER
MANHOLES

S7 TO S10
TOP-781.77
IN'SW'-775.25
IN'NW'-775.31
OUT-774.87

S8 TO S9
TOP-779.66
OUT-771.94

S9 TO S10
TOP-782.07
IN-770.48
OUT-770.43

S10 TO S11
TOP-781.07
IN'W'-769.23
IN'SE'-769.85
OUT-769.03

S11
TOP-782.83
IN-759.16

S12 to S13
TOP-798.86
IN-793.99
OUT-793.83

S13 TO S14
TOP-784.89
IN-777.92
OUT-777.83

S14 TO S15
TOP-784.21
IN'S'-777.04 8"
IN'W'-777.03 8"
(ORIGIN UNKNOWN)
OUT-769.77

S15 TO S16
TOP-781.92
IN-769.30
OUT-769.23

S16
TOP-783.73
IN-768.02

LEGEND

PROPOSED	——X" G——
REMAIN	– –X" G– –
ABANDON OR REMOVE	– –X" G– –
TEMPORARY	—TEMP/G—

CONSTRUCTION NOTES:

1. ALL EXISTING CUSTOMERS MUST REMAIN IN SERVICE AT ALL TIMES.
2. UNLESS SPECIFICALLY NOTED GAS MAIN TO BE INSTALLED AT MINIMUM 36" DEPTH BELOW FINAL GRADE.
3. THE LOCATION OF EXISTING UTILITIES SHOWN ARE APPROXIMATE AND NOT NECESSARILY ALL THAT EXIST. THE CONTRACTOR SHALL FIELD VERIFY ALL UTILITY LOCATIONS PRIOR TO CONSTRUCTION.
4. BASE SURVEY WAS PROVIDED BY TDOT. ONLY THE INFORMATION REGARDING NATURAL GAS MAIN RELOCATION HAS BEEN PROVIDED BY JAMES+ASSOCIATES, INC.
5. CONTRACTOR SHALL BE AWARE THAT THERE MAY BE OTHER CONTRACTORS ONSITE WORKING ON OTHER PORTIONS OF THE PROJECT. CONTRACTORS SHALL COORDINATE AND COOPERATE TO AVOID CONFLICT AND DAMAGE.

JAMES R. GILLESPIE JR. REGISTERED ENGINEER NO. 102690 STATE OF TENNESSEE
08-15-14

COORDINATES ARE NAD/83(1995), ARE DATUM ADJUSTED BY THE FACTOR OF 1.000083 AND TIED TO THE TGRN. ALL ELEVATIONS ARE REFERENCED TO THE NAVD 1988.

GREATER DICKSON
GAS AUTHORITY

UTILITY LAYOUT

INTERSECTION NO. 2
STA.391+25 TO STA.402+00

SCALE: 1"= 50'

$$$$SYTIME$$$$$$
$$$$DGNSPEC$$

TYPE	YEAR	PROJECT NO.	SHEET NO.
CONST.	2014	22004-3246-14	U2-5

DICKSON COUNTY

SANITARY SEWER MANHOLES

S1 TO S2
TOP-810.81
OUT-804.75

S2 TO S3
TOP-807.79
IN-803.48
OUT-803.48

S3 TO S5
TOP-807.47
IN'NW'-802.02
IN'NE'-802.06
OUT-801.99

S4 TO S5
TOP-802.01
OUT-796.89

S5 TO S7
TOP-794.44
IN'NW'-790.24
IN'NE'-790.34
OUT-790.19

S6 TO S7
TOP-785.41
OUT-776.61

D31 TO D35
TOP-793.45
OUT-791.40
15"RCP

D32 TO D35
TOP-794.97
OUT-790.09
24"RCP

D33 TO D35
TOP-794.34
OUT-788.92
18"RCP

D34 TO D35
TOP-793.92
OUT-791.02
15"RCP

D35
JUNCTION BOX
NOT FOUND
APPROXIMATE
LOCATION SHOWN
DESTINATION
UNKNOWN

D36 TO D41
TOP-807.45
OUT-804.99
18"RCP

D37 TO D41
TOP-808.44
OUT-805.32
15"RCP

D38 TO D41
TOP-808.35
OUT-805.60
15"RCP

D39 TO D42
TOP-806.65
OUT-804.22
18"RCP

D40 TO D42
TOP-806.65
OUT-804.00
18"RCP

D41 TO D42
JUNCTION BOX
NOT FOUND
APPROXIMATE
LOCATION SHOWN
OUT-24"RCP

D42 TO SOUTH
PIPE NOT FOUND
TOP-806.80
IN'N'-802.04 24"RCP
IN'E'-802.55 18"RCP
IN'SE'-802.55 18"RCP
OUT-801.88
24"RCP

CURVE COLLEGE-2
PI 402+35.01
N 635,766.4545
E 1,560,659.2173
PC 401+27.12
PT 403+42.28
Δ 10° 45' 29" (RT)
D 5° 00' 00"
R 1,145.92
L 215.16
T 107.90
SE EXISTING
POSTED SPEED 30 MPH

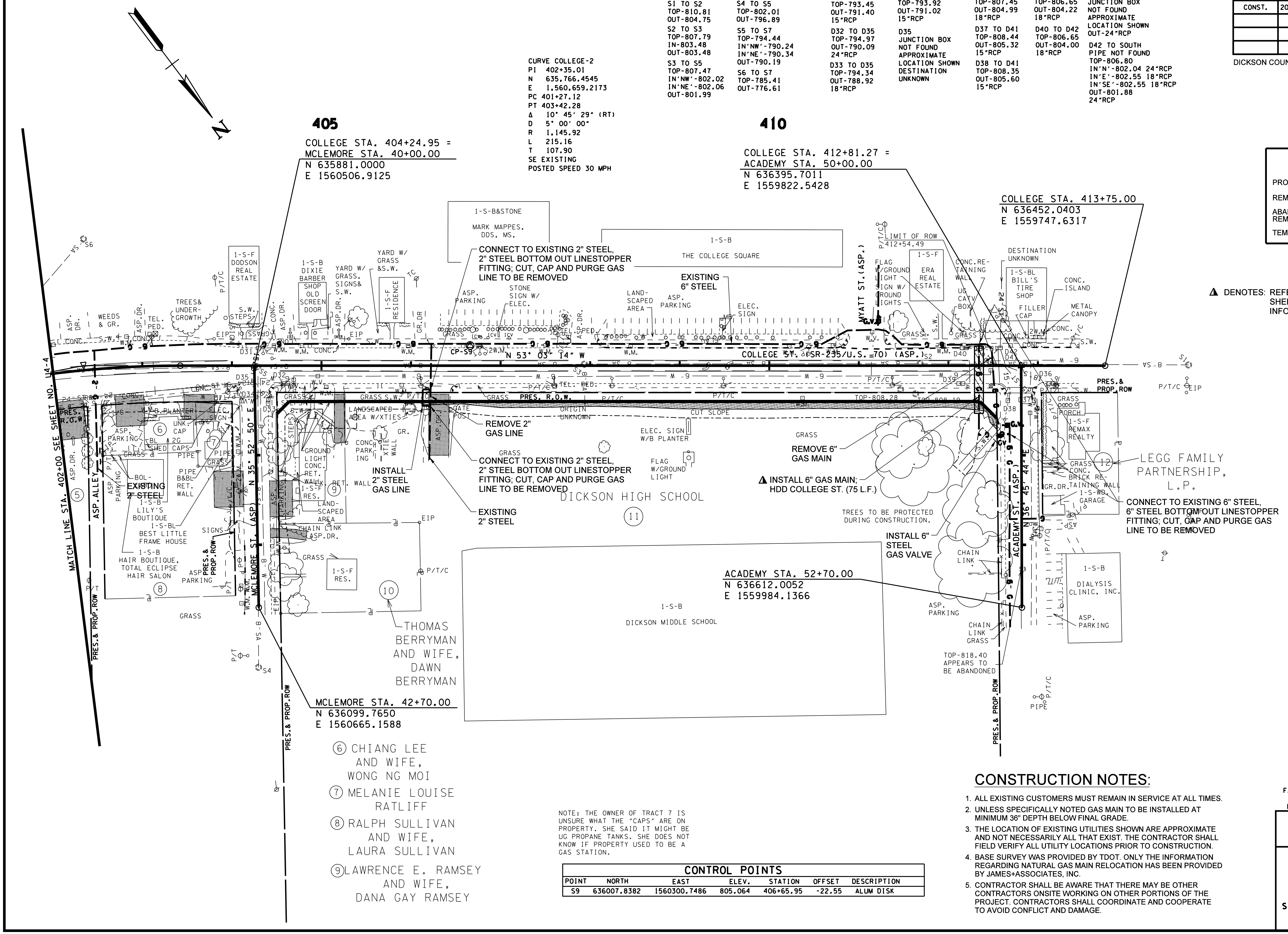

(6) CHIANG LEE AND WIFE, WONG NG MOI

(7) MELANIE LOUISE RATLIFF

(8) RALPH SULLIVAN AND WIFE, LAURA SULLIVAN

(9) LAWRENCE E. RAMSEY AND WIFE, DANA GAY RAMSEY

LEGEND

PROPOSED	——X" G——
REMAIN	– –X" G– –
ABANDON OR REMOVE	– –X" G– –
TEMPORARY	—TEMP/G—

▲ DENOTES: REFER TO CROSS-SECTIONS SHEET U2-17 FOR ADDITIONAL INFORMATION

NOTE: THE OWNER OF TRACT 7 IS UNSURE WHAT THE "CAPS" ARE ON PROPERTY. SHE SAID IT MIGHT BE UG PROPANE TANKS. SHE DOES NOT KNOW IF PROPERTY USED TO BE A GAS STATION.

CONTROL POINTS

POINT	NORTH	EAST	ELEV.	STATION	OFFSET	DESCRIPTION
S9	636007.8382	1560300.7486	805.064	406+65.95	-22.55	ALUM DISK

CONSTRUCTION NOTES:

1. ALL EXISTING CUSTOMERS MUST REMAIN IN SERVICE AT ALL TIMES.
2. UNLESS SPECIFICALLY NOTED GAS MAIN TO BE INSTALLED AT MINIMUM 36" DEPTH BELOW FINAL GRADE.
3. THE LOCATION OF EXISTING UTILITIES SHOWN ARE APPROXIMATE AND NOT NECESSARILY ALL THAT EXIST. THE CONTRACTOR SHALL FIELD VERIFY ALL UTILITY LOCATIONS PRIOR TO CONSTRUCTION.
4. BASE SURVEY WAS PROVIDED BY TDOT. ONLY THE INFORMATION REGARDING NATURAL GAS MAIN RELOCATION HAS BEEN PROVIDED BY JAMES+ASSOCIATES, INC.
5. CONTRACTOR SHALL BE AWARE THAT THERE MAY BE OTHER CONTRACTORS ONSITE WORKING ON OTHER PORTIONS OF THE PROJECT. CONTRACTORS SHALL COORDINATE AND COOPERATE TO AVOID CONFLICT AND DAMAGE.

JAMES R. GILLESPIE JR. REGISTERED PROFESSIONAL ENGINEER NO. 102690 STATE OF TENNESSEE

08-15-14

COORDINATES ARE NAD/83(1995), ARE DATUM ADJUSTED BY THE FACTOR OF 1.000083 AND TIED TO THE TGRN. ALL ELEVATIONS ARE REFERENCED TO THE NAVD 1988.

GREATER DICKSON GAS AUTHORITY

UTILITY LAYOUT

INTERSECTION NO. 2
STA.402+00 TO STA.413+00

SCALE: 1"= 50'

$$$$SYTIME$$$$$$
$$$$DGNSPEC$$$

TYPE	YEAR	PROJECT NO.	SHEET NO.
CONST.	2014	22004-3246-14	U2-6

DICKSON COUNTY

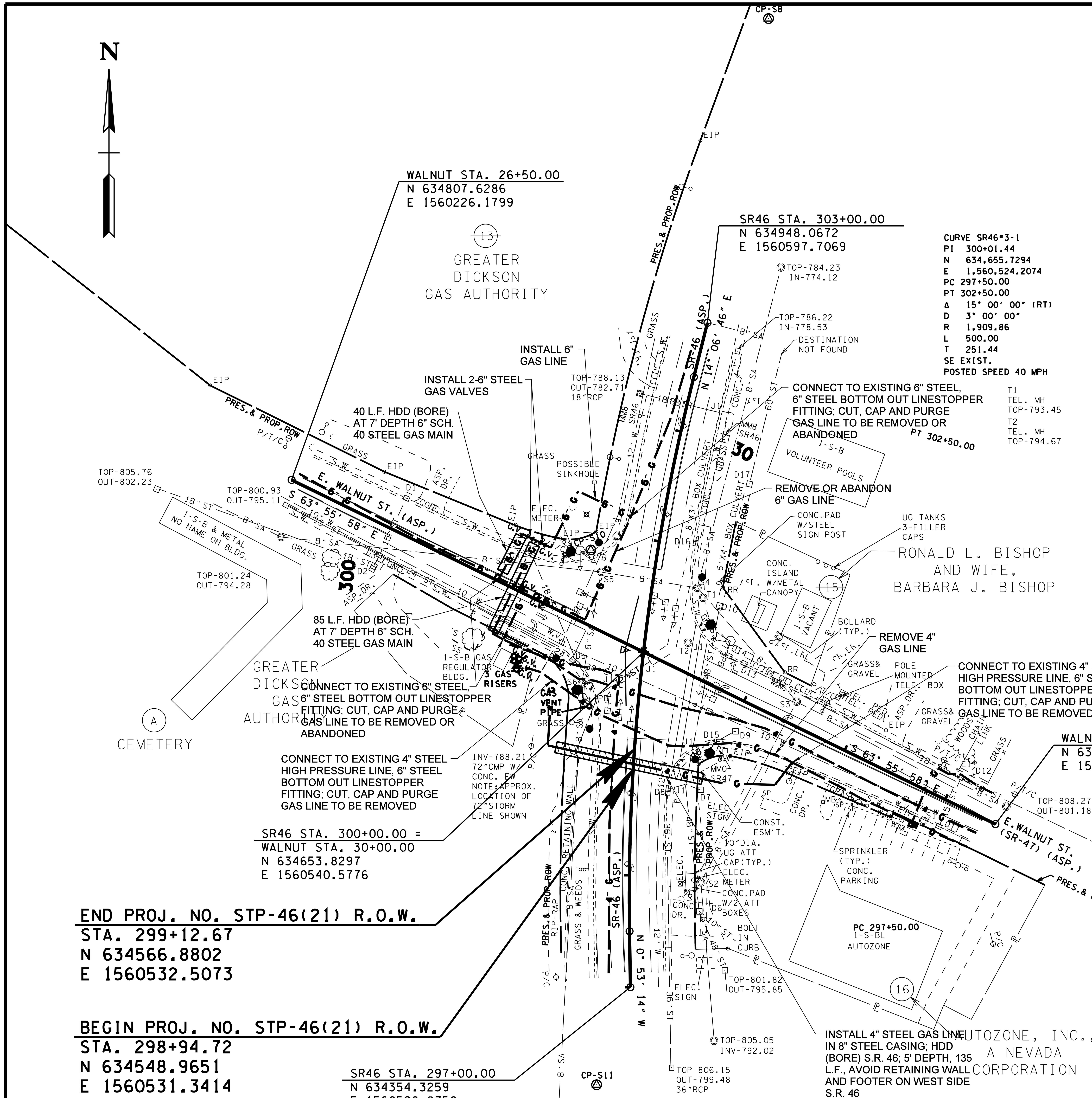

LEGEND

PROPOSED	—X" G—
REMAIN	– –X" G– –
ABANDON OR REMOVE	– –X" G– –
TEMPORARY	—TEMP/G—

SANITARY SEWER MANHOLES

S1
TOP-805.48
NO FLOW. ABOUT 1′ OF STANDING WATER W/DEBRIS. APPEARS TO NOT BE IN USE.

S2
TOP-801.01
IN-790.57
BOT-790.57
OUT-790.57

S3
TOP-797.07
IN′E′-789.09
IN′S′-789.48
BOT-788.97
OUT-788.85

S4
TOP-793.63
IN′SE′-779.19
IN′W′-779.14
BOT-779.12
OUT-779.10

S5
TOP-793.60
IN′S′-783.66
IN′W′-783.59
BOT-783.40
OUT-783.20

S6
TOP-796.20
IN-785.60
BOT-785.50
OUT-785.40

STORM DRAINAGE STRUCTURES

J1
NOTE: ALL UNDERGROUND STORM DRAINAGE LINE LOCATIONS @ BLIND PIPE INTERSECTIONS AND JUNCTION BOXES ALONG WITH JUNCTION BOX LOCATIONS SHOWN HEREON WERE INTERPOLATED FROM PLANS OR ASSUMED.

D1
TOP-797.44
OUT-793.68
15"RCP

D2
TOP-797.46
IN-793.78 18"RCP
BOT-793.39
OUT-793.37 24"RCP

D3
TOP-797.60
IN′S′-793.14 24"RCP
IN′W′-793.53 15"RCP
IN′N′-793.05 15"RCP
BOT-792.98
OUT-792.90

D4
TOP-794.87
OUT-791.72
18"RCP

D5
TOP-794.80
IN′W′-788.48 24"RCP
IN′N′-788.47 18"RCP
BOT-788.42
OUT-788.22 30"RCP

D6
TOP-801.31
IN-799.62 10"PVC
ORIGIN UNKNOWN
IN-792.65 48"RCP
BOT-792.56
OUT-792.51

D7
TOP-797.07
OUT-794.17
18"RCP

D8
TOP-799.05
IN-792.48 36"RCP
BOT-792.36
OUT-792.35 36"RCP

D9
TOP-796.94
IN-794.68 12"RCP
BOT-792.39
OUT-792.15

D10
TOP-792.91
IN-785.59 48"RCP
BOTTOM 785.19
OUT-785.15
4.8X4.8 BOX CULV. (MEASURED)
5′X4′(PLAN; SEE D16)

D11
TOP-805.69
OUT-803.61

D12
TOP-805.32
IN′E′-799.21 18"RCP
IN′S′-802.42 15"RCP
BOT-799.30
OUT-799.09 18"RCP

D13
TOP-795.19
IN-790.01 18"RCP
BOT-789.90 18"RCP
OUT-789.77

D14
TOP-794.96
IN-789.53
BOT-789.53
OUT-789.48

D15
TOP-796.50
OUT-794.68
12"RCP TO D9

D16
TOP-791.48
IN-784.03
OUT-783.94
8′X3′ BOX ACCORDING TO PLAN SHT. 9A CONST. PROJ. # 22004-3228-04

D17
TOP-789.14
IN-782.73
OUT-782.82
60"RCP

JAMES R. GILLESPIE JR. REGISTERED ENGINEER NO. 102690 STATE OF TENNESSEE

08-15-14

CONSTRUCTION NOTES:

1. ALL EXISTING CUSTOMERS MUST REMAIN IN SERVICE AT ALL TIMES.
2. UNLESS SPECIFICALLY NOTED GAS MAIN TO BE INSTALLED AT MINIMUM 36" DEPTH BELOW FINAL GRADE.
3. THE LOCATION OF EXISTING UTILITIES SHOWN ARE APPROXIMATE AND NOT NECESSARILY ALL THAT EXIST. THE CONTRACTOR SHALL FIELD VERIFY ALL UTILITY LOCATIONS PRIOR TO CONSTRUCTION.
4. BASE SURVEY WAS PROVIDED BY TDOT. ONLY THE INFORMATION REGARDING NATURAL GAS MAIN RELOCATION HAS BEEN PROVIDED BY JAMES+ASSOCIATES, INC.
5. CONTRACTOR SHALL BE AWARE THAT THERE MAY BE OTHER CONTRACTORS ONSITE WORKING ON OTHER PORTIONS OF THE PROJECT. CONTRACTORS SHALL COORDINATE AND COOPERATE TO AVOID CONFLICT AND DAMAGE.

COORDINATES ARE NAD/83(1995), ARE DATUM ADJUSTED BY THE FACTOR OF 1.000083 AND TIED TO THE TGRN. ALL ELEVATIONS ARE REFERENCED TO THE NAVD 1988.

CONTROL POINTS

POINT	NORTH	EAST	ELEV.	STATION	OFFSET	DESCRIPTION
S8	635219.9261	1560652.2717	781.292	OffChain	OffChain	ALUM DISK
S10	634744.9899	1560493.4745	794.209	300+82.60	-59.13	ALUM DISK
S11	634267.0911	1560498.6707	809.271	OffChain	OffChain	ALUM DISK

GREATER DICKSON GAS AUTHORITY

UTILITY LAYOUT

INTERSECTION NO.3

SCALE: 1"= 50′

$$$$SYTIME$$$$$$ $$$$DGNSPEC$$$

TYPE	YEAR	PROJECT NO.	SHEET NO.
CONST.	2014	22004-3246-14	U2-7

DICKSON COUNTY

STORM DRAINAGE STRUCTURES

D1
TOP-851.57
OUT-849.08
15"RCP

D2
TOP-851.27
IN-848.07
15"RCP
BOT-847.62
OUT-847.53
18"RCP

D3 (TO BE REMOVED)
TOP-854.97
IN-'SW'-844.66
18"RCP
IN'NW'-851.17
18"RCP
BOT-840.77
OUT-840.76
18"RCP

D4
INV-852.34
8"PVC W/
STONE EW

D5
INV-851.18
18"RCP
W/CONC. EW

D6
INV-854.22
W/CONC. EW

D7
INV-852.77
W/CONC. EW

D8
INV-858.58
W/CONC. EW

D9
INV-859.25
W/CONC. EW

D10
TOP-854.35
OUT-840.54
18"RCP

D11
TOP-863.19
OUT-859.88
18"RCP

D12
INV-875.83
18"CMP

D13
INV-872.76
18"CPP

D14
INV-869.54

D15
INV-867.57

D16
INV-868.79

D17
NOT FOUND
APPROX.
LOC. SHOWN

D18
INV-864.90
W/CONC. EW
22"X14" RCP

D19
INV-863.66
W/CONC. EW
22"X14" RCP

D20 (TO BE REMOVED)
TOP-863.39
OUT-862.78
3-4" CPP

D21
INV-860.61
3-4" CPP

D22 (TO BE REMOVED)
INV-860.39
18"RCP
W/CONC. EW

D23
TOP-861.84
OUT-857.93
18"RCP

J1
NOTE: ALL UNDERGROUND STORM DRAINAGE LINE LOCATIONS @ BLIND PIPE INTERSECTIONS AND JUNCTION BOXES ALONG WITH JUNCTION BOX LOCATIONS SHOWN HEREON WERE INTERPOLATED FROM PLANS OR ASSUMED.

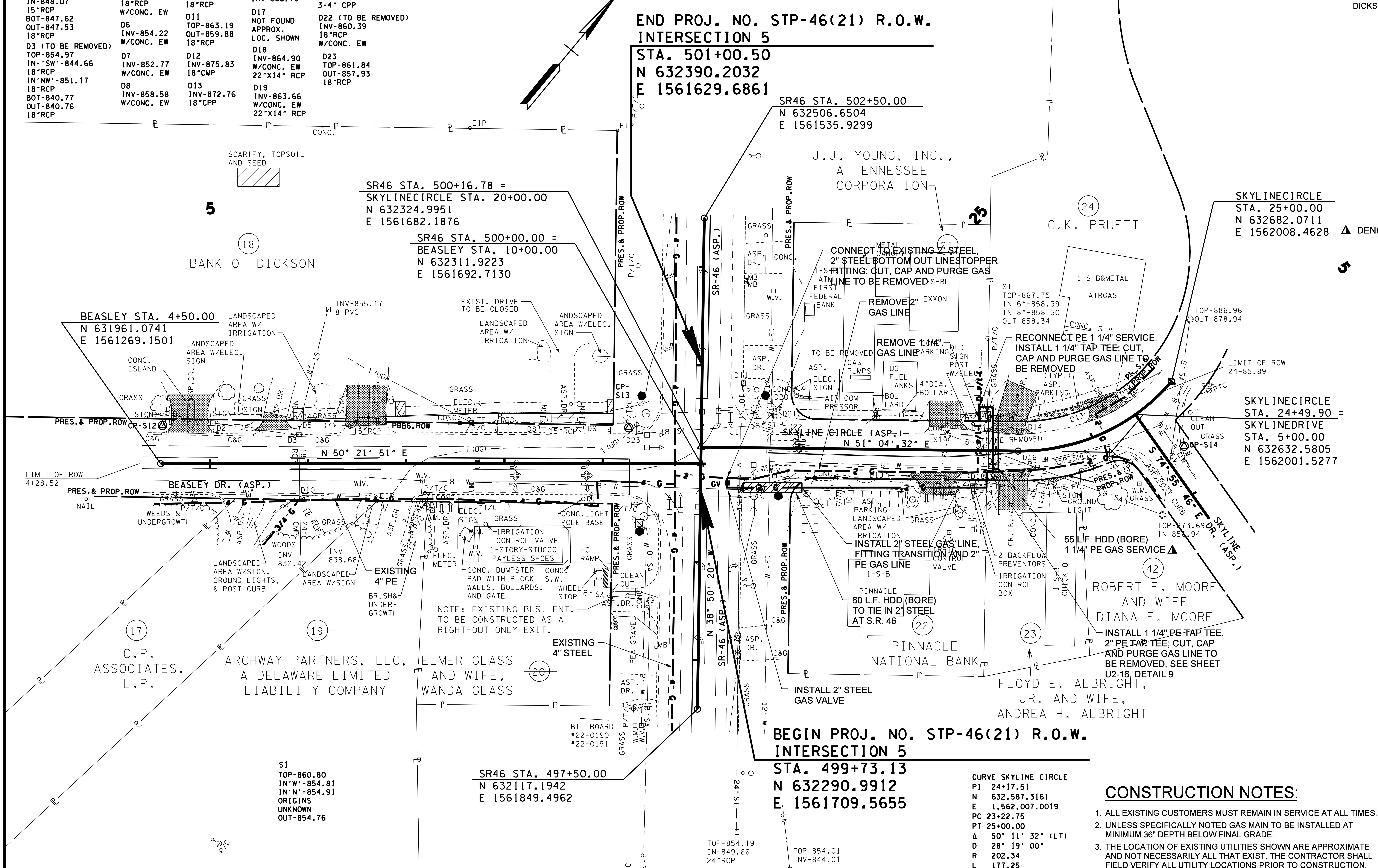

LEGEND

PROPOSED	—X" G—
REMAIN	- -X" G- -
ABANDON OR REMOVE	- -X" G- -
TEMPORARY	—TEMP/G—

▲ DENOTES: REFER TO CROSS-SECTIONS SHEET U2-17 FOR ADDITIONAL INFORMATION

CURVE SKYLINE CIRCLE
PI 24+17.51
N 632,587.3161
E 1,562,007.0019
PC 23+22.75
PT 25+00.00
Δ 50° 11' 32" (LT)
D 28° 19' 00"
R 202.34
L 177.25
T 94.77
SE EXISTING
POSTED SPEED 30 MPH

CONTROL POINTS

POINT	NORTH	EAST	ELEV.	STATION	OFFSET	DESCRIPTION
S12	631992.2161	1561245.7452	852.380	4+51.84	-38.91	ALUM DISK (BEASLEY)
S13	632293.2359	1561612.9534	862.598	9+26.66	-36.49	ALUM DISK (BEASLEY)
S14	632639.4348	1562060.2400	878.627	24+67.07	55.84	ALUM DISK (SKYLINE)

CONSTRUCTION NOTES:

1. ALL EXISTING CUSTOMERS MUST REMAIN IN SERVICE AT ALL TIMES.
2. UNLESS SPECIFICALLY NOTED GAS MAIN TO BE INSTALLED AT MINIMUM 36" DEPTH BELOW FINAL GRADE.
3. THE LOCATION OF EXISTING UTILITIES SHOWN ARE APPROXIMATE AND NOT NECESSARILY ALL THAT EXIST. THE CONTRACTOR SHALL FIELD VERIFY ALL UTILITY LOCATIONS PRIOR TO CONSTRUCTION.
4. BASE SURVEY WAS PROVIDED BY TDOT. ONLY THE INFORMATION REGARDING NATURAL GAS MAIN RELOCATION HAS BEEN PROVIDED BY JAMES+ASSOCIATES, INC.
5. CONTRACTOR SHALL BE AWARE THAT THERE MAY BE OTHER CONTRACTORS ONSITE WORKING ON OTHER PORTIONS OF THE PROJECT. CONTRACTORS SHALL COORDINATE AND COOPERATE TO AVOID CONFLICT AND DAMAGE.

JAMES R. GILLESPIE JR. REGISTERED ENGINEER NO. 102690 STATE OF TENNESSEE
08-15-14

COORDINATES ARE NAD/83(1995), ARE DATUM ADJUSTED BY THE FACTOR OF 1.000083 AND TIED TO THE TGRN. ALL ELEVATIONS ARE REFERENCED TO THE NAVD 1988.

GREATER DICKSON GAS AUTHORITY

UTILITY LAYOUT

INTERSECTION NO.5

SCALE: 1"= 50'

$$$$SYTIME$$$$$
$$$$DGNSPEC$$$$

TYPE	YEAR	PROJECT NO.	SHEET NO.
CONST.	2014	22004-3246-14	U2-8

DICKSON COUNTY

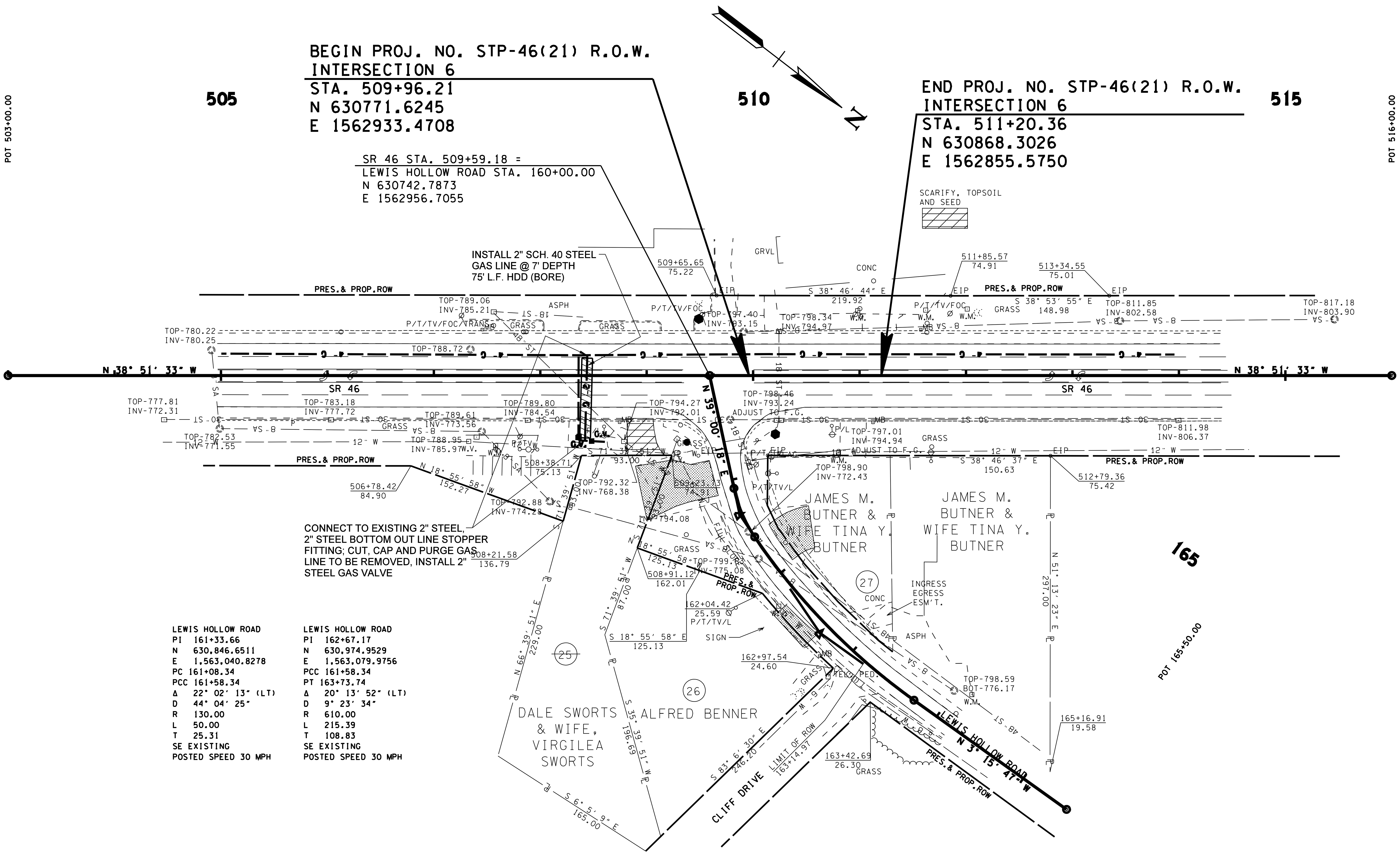

LEWIS HOLLOW ROAD	
PI	161+33.66
N	630,846.6511
E	1,563,040.8278
PC	161+08.34
PCC	161+58.34
Δ	22° 02' 13" (LT)
D	44° 04' 25"
R	130.00
L	50.00
T	25.31
SE EXISTING	
POSTED SPEED 30 MPH	

LEWIS HOLLOW ROAD	
PI	162+67.17
N	630,974.9529
E	1,563,079.9756
PCC	161+58.34
PT	163+73.74
Δ	20° 13' 52" (LT)
D	9° 23' 34"
R	610.00
L	215.39
T	108.83
SE EXISTING	
POSTED SPEED 30 MPH	

LEGEND

PROPOSED	—X" G—
REMAIN	– –X" G– –
ABANDON OR REMOVE	– –X" G– –
TEMPORARY	—TEMP/G—

JAMES R. GILLESPIE JR. REGISTERED ENGINEER NO. 102690 STATE OF TENNESSEE

08-15-14

COORDINATES ARE NAD/83(1995), ARE DATUM ADJUSTED BY THE FACTOR OF 1.000083 AND TIED TO THE TGRN. ALL ELEVATIONS ARE REFERENCED TO THE NAVD 1988.

GREATER DICKSON GAS AUTHORITY

UTILITY LAYOUT

INTERSECTION NO.6

SCALE: 1"= 50'

$$$$SYTIME$$$$$$

$$$$DGNSPEC$$$

TYPE	YEAR	PROJECT NO.	SHEET NO.
CONST.	2014	22004-3246-14	U2-9

DICKSON COUNTY

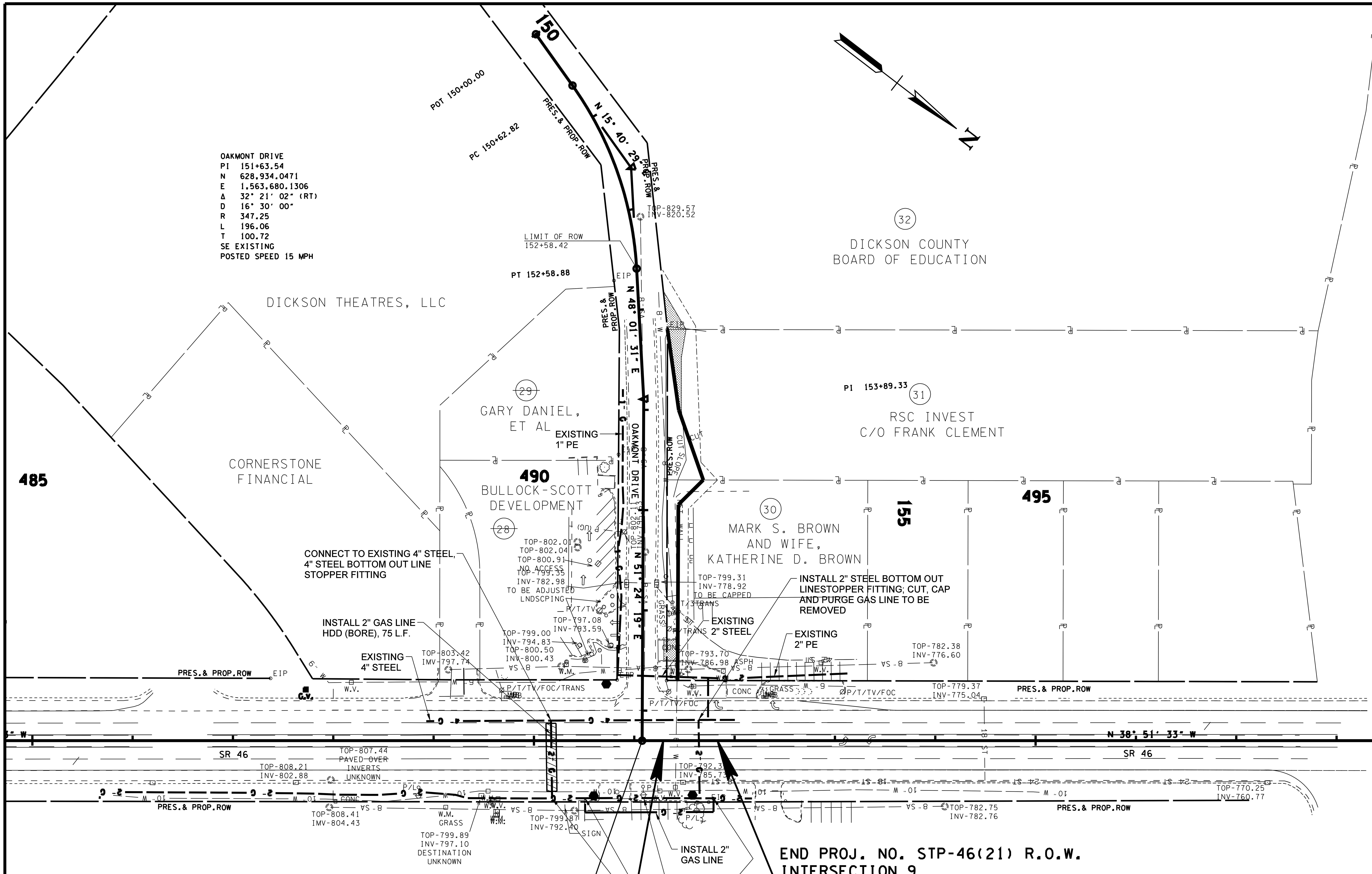

SR 46 STA. 491+07.84 =
OAKMONT DRIVE STA. 157+30.00
N 629301.1670
E 1564118.2521

BEGIN PROJ. NO. STP-46(21) R.O.W.
INTERSECTION 9
STA. 491+28.90
N 629317.5654
E 1564105.0395

CONNECT TO EXISTING 2" STEEL,
2" STEEL BOTTOM OUT LINE STOPPER
FITTING; CUT, CAP AND PURGE
EXISTING GAS LINE TO BE REMOVED

END PROJ. NO. STP-46(21) R.O.W.
INTERSECTION 9
STA. 491+82.92
N 629359.6298
E 1564071.1473

B
WESTERN 46
PROPERTIES, LLC

LEGEND

PROPOSED	—X" G—
REMAIN	– –X" G– –
ABANDON OR REMOVE	– –X" G– –
TEMPORARY	—TEMP/G—

CONSTRUCTION NOTES:

1. ALL EXISTING CUSTOMERS MUST REMAIN IN SERVICE AT ALL TIMES.
2. UNLESS SPECIFICALLY NOTED GAS MAIN TO BE INSTALLED AT MINIMUM 36" DEPTH BELOW FINAL GRADE.
3. THE LOCATION OF EXISTING UTILITIES SHOWN ARE APPROXIMATE AND NOT NECESSARILY ALL THAT EXIST. THE CONTRACTOR SHALL FIELD VERIFY ALL UTILITY LOCATIONS PRIOR TO CONSTRUCTION.
4. BASE SURVEY WAS PROVIDED BY TDOT. ONLY THE INFORMATION REGARDING NATURAL GAS MAIN RELOCATION HAS BEEN PROVIDED BY JAMES+ASSOCIATES, INC.
5. CONTRACTOR SHALL BE AWARE THAT THERE MAY BE OTHER CONTRACTORS ONSITE WORKING ON OTHER PORTIONS OF THE PROJECT. CONTRACTORS SHALL COORDINATE AND COOPERATE TO AVOID CONFLICT AND DAMAGE.

JAMES R. GILLESPIE JR. REGISTERED ENGINEER NO. 102690 STATE OF TENNESSEE
08-15-14

COORDINATES ARE NAD/83(1995), ARE DATUM ADJUSTED BY THE FACTOR OF 1.000083 AND TIED TO THE TGRN. ALL ELEVATIONS ARE REFERENCED TO THE NAVD 1988.

GREATER DICKSON
GAS AUTHORITY

UTILITY LAYOUT

INTERSECTION NO.9

SCALE: 1"= 50′

$$$$SYTIME$$$$$
$$$$DGNSPEC$$

TYPE	YEAR	PROJECT NO.	SHEET NO.
CONST.	2014	22004-3246-14	U2-10

DICKSON COUNTY

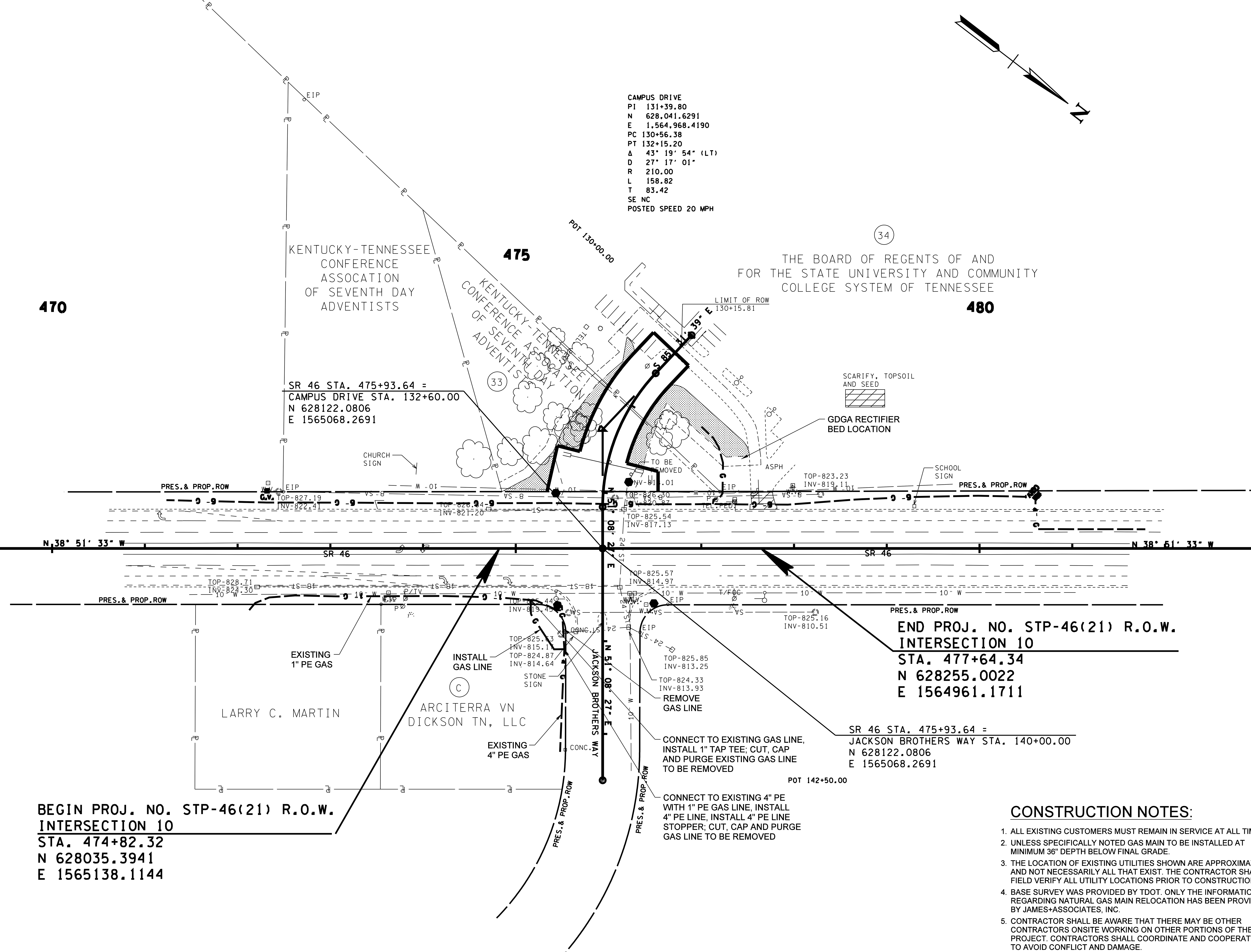

LEGEND

PROPOSED	—X" G—
REMAIN	– –X" G– –
ABANDON OR REMOVE	– –X" G– –
TEMPORARY	—TEMP/G—

CONSTRUCTION NOTES:

1. ALL EXISTING CUSTOMERS MUST REMAIN IN SERVICE AT ALL TIMES.
2. UNLESS SPECIFICALLY NOTED GAS MAIN TO BE INSTALLED AT MINIMUM 36" DEPTH BELOW FINAL GRADE.
3. THE LOCATION OF EXISTING UTILITIES SHOWN ARE APPROXIMATE AND NOT NECESSARILY ALL THAT EXIST. THE CONTRACTOR SHALL FIELD VERIFY ALL UTILITY LOCATIONS PRIOR TO CONSTRUCTION.
4. BASE SURVEY WAS PROVIDED BY TDOT. ONLY THE INFORMATION REGARDING NATURAL GAS MAIN RELOCATION HAS BEEN PROVIDED BY JAMES+ASSOCIATES, INC.
5. CONTRACTOR SHALL BE AWARE THAT THERE MAY BE OTHER CONTRACTORS ONSITE WORKING ON OTHER PORTIONS OF THE PROJECT. CONTRACTORS SHALL COORDINATE AND COOPERATE TO AVOID CONFLICT AND DAMAGE.

JAMES R. GILLESPIE JR. REGISTERED ENGINEER NO. 102690 STATE OF TENNESSEE

08-15-14

COORDINATES ARE NAD/83(1995), ARE DATUM ADJUSTED BY THE FACTOR OF 1.000083 AND TIED TO THE TGRN. ALL ELEVATIONS ARE REFERENCED TO THE NAVD 1988.

GREATER DICKSON GAS AUTHORITY

UTILITY LAYOUT

INTERSECTION NO. 10

SCALE: 1"= 50′

$$$$SYTIME$$$$$$ $$$$DGNSPEC$$$$

TYPE	YEAR	PROJECT NO.	SHEET NO.
CONST.	2014	22004-3246-14	U2-11

DICKSON COUNTY

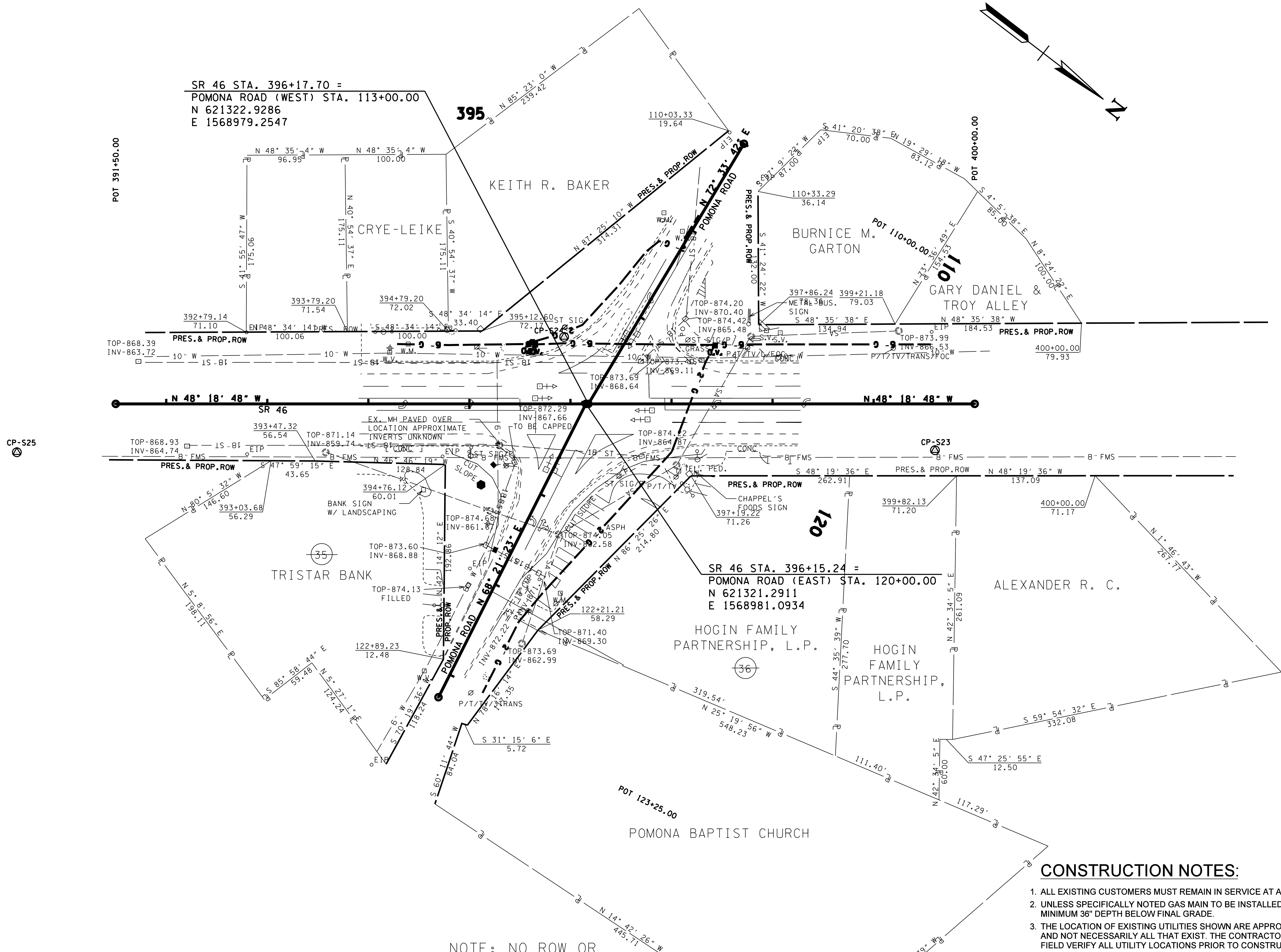

NOTE: NO ROW OR
EASEMENTS
REQUIRED.

CONTROL POINTS					
POINT	NORTH	EAST	ELEV.	STATION	OFFSET
S23	621585.2820	1568753.6448	873.44	399+60.67	45.88' (RT)
S24	621257.4832	1568953.1085	873.68	395+93.70	66.26' (LT)

LEGEND

PROPOSED	—X" G—
REMAIN	– –X" G– –
ABANDON OR REMOVE	– –X" G– –
TEMPORARY	—TEMP/G—

NO NATURAL GAS UTILITY RELOCATION REQUIRED

CONSTRUCTION NOTES:

1. ALL EXISTING CUSTOMERS MUST REMAIN IN SERVICE AT ALL TIMES.
2. UNLESS SPECIFICALLY NOTED GAS MAIN TO BE INSTALLED AT MINIMUM 36" DEPTH BELOW FINAL GRADE.
3. THE LOCATION OF EXISTING UTILITIES SHOWN ARE APPROXIMATE AND NOT NECESSARILY ALL THAT EXIST. THE CONTRACTOR SHALL FIELD VERIFY ALL UTILITY LOCATIONS PRIOR TO CONSTRUCTION.
4. BASE SURVEY WAS PROVIDED BY TDOT. ONLY THE INFORMATION REGARDING NATURAL GAS MAIN RELOCATION HAS BEEN PROVIDED BY JAMES+ASSOCIATES, INC.
5. CONTRACTOR SHALL BE AWARE THAT THERE MAY BE OTHER CONTRACTORS ONSITE WORKING ON OTHER PORTIONS OF THE PROJECT. CONTRACTORS SHALL COORDINATE AND COOPERATE TO AVOID CONFLICT AND DAMAGE.

JAMES R. GILLESPIE JR. REGISTERED ENGINEER NO. 102690 STATE OF TENNESSEE

08-15-14

COORDINATES ARE NAD/83(1995), ARE DATUM ADJUSTED BY THE FACTOR OF 1.000083 AND TIED TO THE TGRN. ALL ELEVATIONS ARE REFERENCED TO THE NAVD 1988.

GREATER DICKSON GAS AUTHORITY

UTILITY LAYOUT

INTERSECTION NO. 11

SCALE: 1"= 50'

$$$$SYTIME$$$$$$
$$$$DGNSPEC$$

TYPE	YEAR	PROJECT NO.	SHEET NO.
CONST.	2014	22004-3246-14	U2-12

DICKSON COUNTY

REV. 04-30-14: ADDED BUILDING TO TRACT NO. 39.

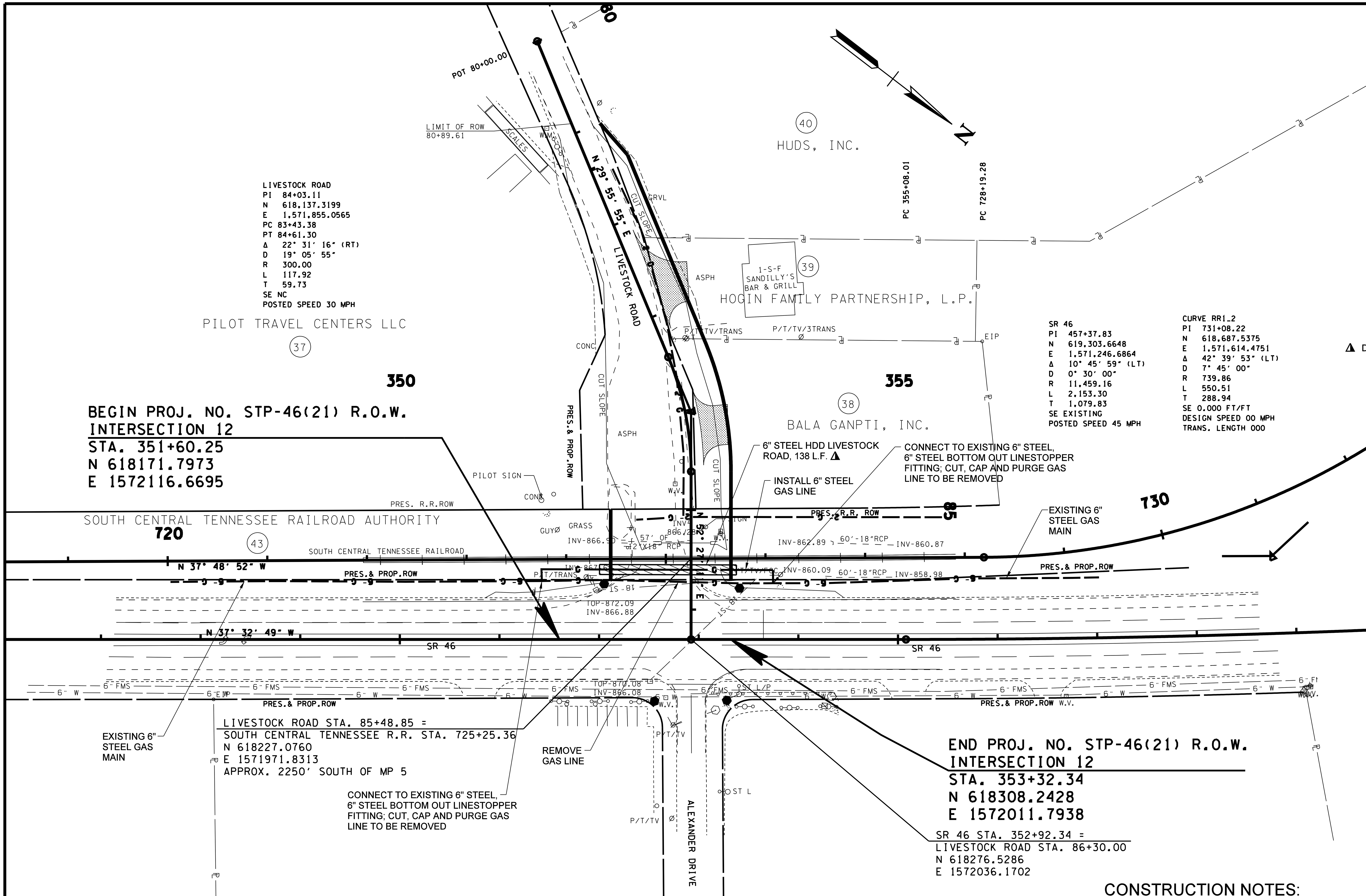

LEGEND

PROPOSED	—X" G—
REMAIN	- -X" G- -
ABANDON OR REMOVE	- -X" G- -
TEMPORARY	—TEMP/G—

▲ DENOTES: REFER TO CROSS-SECTIONS SHEET U2-17 FOR ADDITIONAL INFORMATION

EASEMENT NOTE:
EASEMENT REQUIRED FOR THE RAILROAD CROSSING IS TO BE OBTAINED BY THE UTILITIES ENGINEER BY PROVISIONS CONTAINED IN THE CROSSING AGREEMENT NEGOTIATED WITH THE RAILROAD

CONSTRUCTION NOTES:

1. ALL EXISTING CUSTOMERS MUST REMAIN IN SERVICE AT ALL TIMES.
2. UNLESS SPECIFICALLY NOTED GAS MAIN TO BE INSTALLED AT MINIMUM 36" DEPTH BELOW FINAL GRADE.
3. THE LOCATION OF EXISTING UTILITIES SHOWN ARE APPROXIMATE AND NOT NECESSARILY ALL THAT EXIST. THE CONTRACTOR SHALL FIELD VERIFY ALL UTILITY LOCATIONS PRIOR TO CONSTRUCTION.
4. BASE SURVEY WAS PROVIDED BY TDOT. ONLY THE INFORMATION REGARDING NATURAL GAS MAIN RELOCATION HAS BEEN PROVIDED BY JAMES+ASSOCIATES, INC.
5. CONTRACTOR SHALL BE AWARE THAT THERE MAY BE OTHER CONTRACTORS ONSITE WORKING ON OTHER PORTIONS OF THE PROJECT. CONTRACTORS SHALL COORDINATE AND COOPERATE TO AVOID CONFLICT AND DAMAGE.

JAMES R. GILLESPIE JR. REGISTERED ENGINEER NO. 102690 STATE OF TENNESSEE

08-15-14

COORDINATES ARE NAD/83(1995), ARE DATUM ADJUSTED BY THE FACTOR OF 1.000083 AND TIED TO THE TGRN. ALL ELEVATIONS ARE REFERENCED TO THE NAVD 1988.

GREATER DICKSON GAS AUTHORITY

UTILITY LAYOUT

INTERSECTION NO. 12

SCALE: 1"= 50'

$$$$SYTIME$$$$$$
$$$$DGNSPEC$$$

TYPE	YEAR	PROJECT NO.	SHEET NO.
CONST.	2014	22004-3246-14	U2-13

DICKSON COUNTY

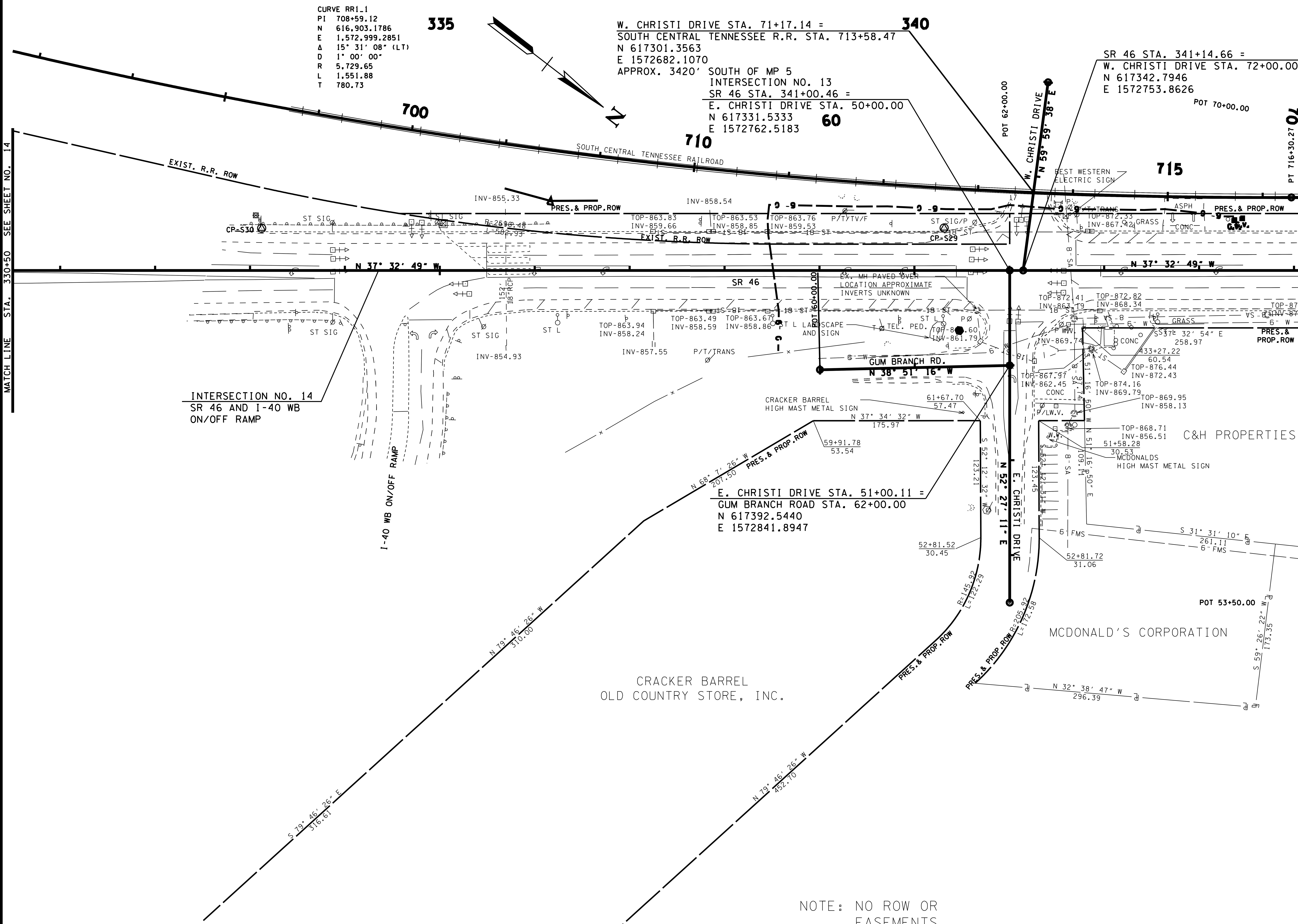

LEGEND

PROPOSED	——X" G——
REMAIN	– –X" G– –
ABANDON OR REMOVE	– –X" G– –
TEMPORARY	—TEMP/G—

NO NATURAL GAS UTILITY RELOCATION REQUIRED

CONTROL POINTS					
POINT	NORTH	EAST	ELEV.	STATION	OFFSET
S30	616679.5319	1573207.5594	872.31	333+12.30	44.48′ (LT)
S29	617249.4968	1572769.1776	867.69	340+31.35	44.71′ (LT)

JAMES R. GILLESPIE JR. REGISTERED ENGINEER STATE OF TENNESSEE NO. 102690

08-15-14

COORDINATES ARE NAD/83(1995), ARE DATUM ADJUSTED BY THE FACTOR OF 1.000083 AND TIED TO THE TGRN. ALL ELEVATIONS ARE REFERENCED TO THE NAVD 1988.

GREATER DICKSON GAS AUTHORITY

UTILITY LAYOUT

INTERSECTION NO. 13 & 14

SCALE: 1″= 50′

$$$$SYTIME$$$$$$ $$$$DGNSPEC$$$$$$

TYPE	YEAR	PROJECT NO.	SHEET NO.
CONST.	2014	22004-3246-14	U2-14

DICKSON COUNTY

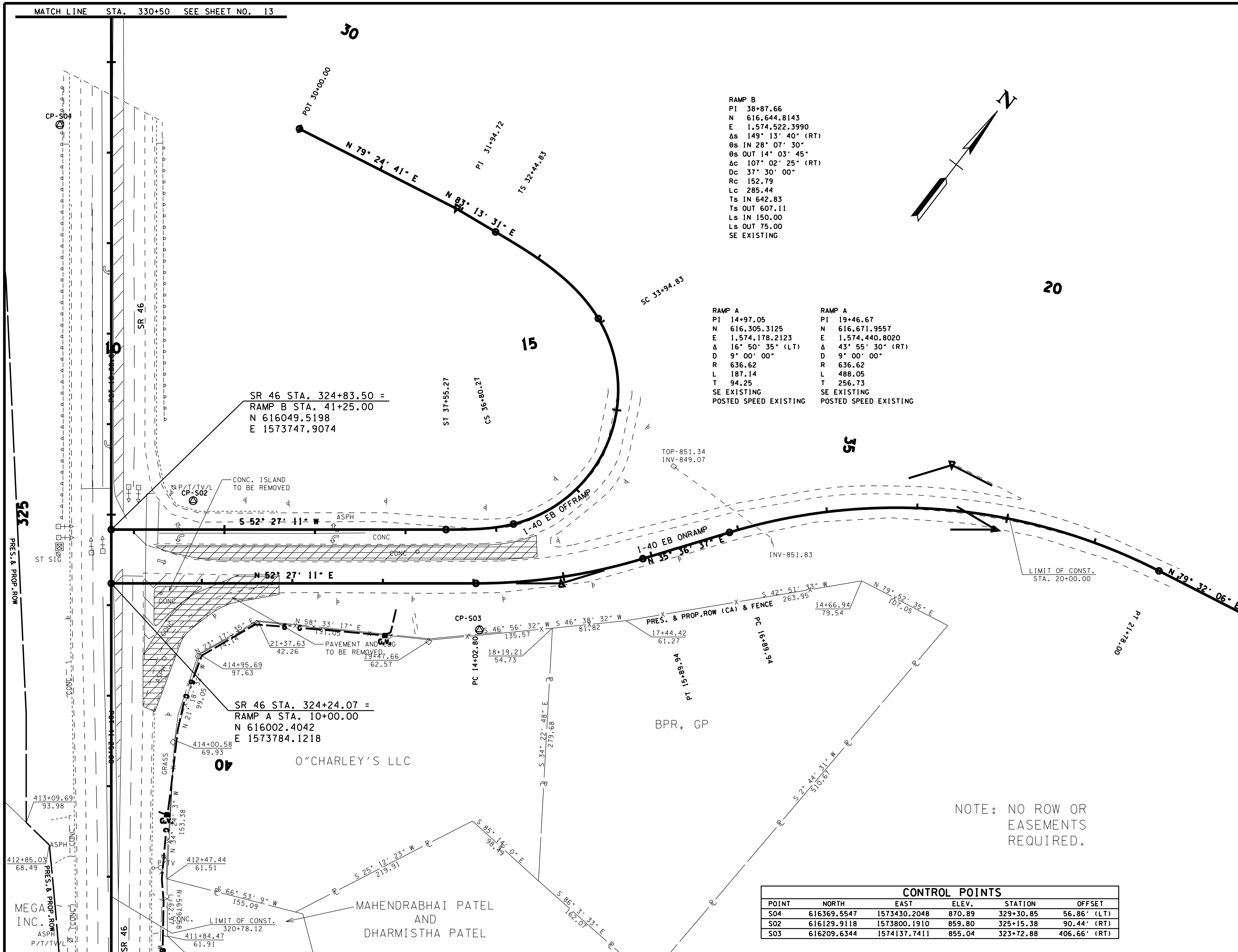

LEGEND

PROPOSED	—X" G—
REMAIN	- -X" G- -
ABANDON OR REMOVE	- -X" G- -
TEMPORARY	—TEMP/G—

NO NATURAL GAS UTILITY RELOCATION REQUIRED

CONTROL POINTS					
POINT	NORTH	EAST	ELEV.	STATION	OFFSET
S04	616369.5547	1573430.2048	870.89	329+30.85	56.86' (LT)
S02	616129.9118	1573800.1910	859.80	325+15.38	90.44' (RT)
S03	616209.6344	1574137.7411	855.04	323+72.88	406.66' (RT)

JAMES R. GILLESPIE JR. REGISTERED ENGINEER NO. 102690 STATE OF TENNESSEE

08-15-14

COORDINATES ARE NAD/83(1995), ARE DATUM ADJUSTED BY THE FACTOR OF 1.000083 AND TIED TO THE TGRN. ALL ELEVATIONS ARE REFERENCED TO THE NAVD 1988.

GREATER DICKSON GAS AUTHORITY

UTILITY LAYOUT

INTERSECTION NO. 15

SCALE: 1"= 50'

TYPE	YEAR	PROJECT NO.	SHEET NO.
CONST.	2014	22004-3246-14	U2-15

DICKSON COUNTY

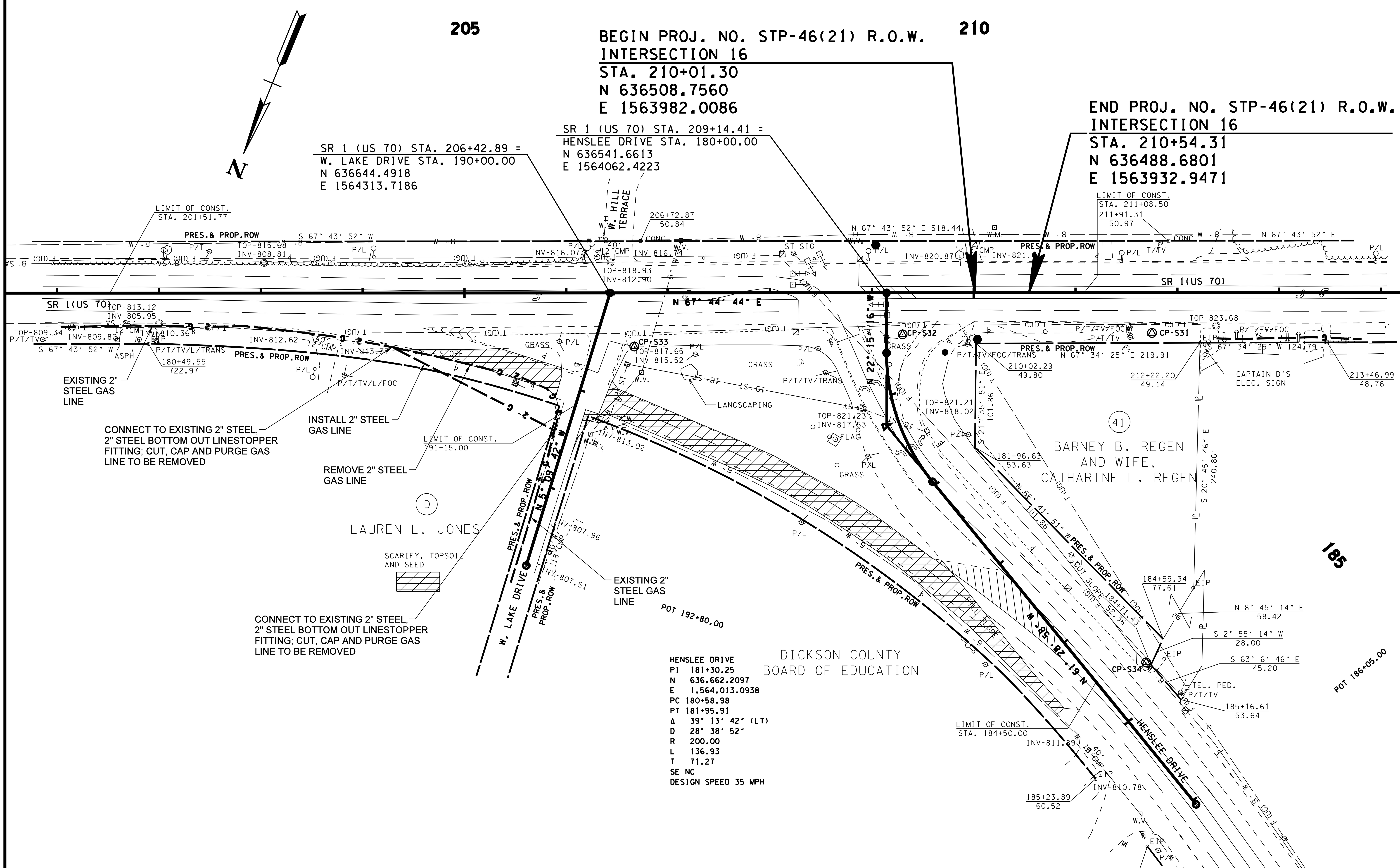

HENSLEE DRIVE
PI 181+30.25
N 636,662.2097
E 1,564,013.0938
PC 180+58.98
PT 181+95.91
Δ 39° 13′ 42″ (LT)
D 28° 38′ 52″
R 200.00
L 136.93
T 71.27
SE NC
DESIGN SPEED 35 MPH

LEGEND

PROPOSED	—X" G—
REMAIN	– –X" G– –
ABANDON OR REMOVE	– –X" G– –
TEMPORARY	—TEMP/G—

CONSTRUCTION NOTES:

1. ALL EXISTING CUSTOMERS MUST REMAIN IN SERVICE AT ALL TIMES.
2. UNLESS SPECIFICALLY NOTED GAS MAIN TO BE INSTALLED AT MINIMUM 36" DEPTH BELOW FINAL GRADE.
3. THE LOCATION OF EXISTING UTILITIES SHOWN ARE APPROXIMATE AND NOT NECESSARILY ALL THAT EXIST. THE CONTRACTOR SHALL FIELD VERIFY ALL UTILITY LOCATIONS PRIOR TO CONSTRUCTION.
4. BASE SURVEY WAS PROVIDED BY TDOT. ONLY THE INFORMATION REGARDING NATURAL GAS MAIN RELOCATION HAS BEEN PROVIDED BY JAMES+ASSOCIATES, INC.
5. CONTRACTOR SHALL BE AWARE THAT THERE MAY BE OTHER CONTRACTORS ONSITE WORKING ON OTHER PORTIONS OF THE PROJECT. CONTRACTORS SHALL COORDINATE AND COOPERATE TO AVOID CONFLICT AND DAMAGE.

CONTROL POINTS

POINT	NORTH	EAST	ELEV.	STATION	OFFSET
S31	636479.4592	1563806.2357	822.78	211+75.07	39.45′ (RT)
S32	636573.4501	1564032.3999	822.25	209+30.16	40.79′ (RT)
S33	636684.1865	1564271.7042	818.80	206+66.74	52.65′ (RT)
S34	636781.0830	1563689.2167	818.30	184+65.97	50.18′ (LT)

JAMES R. GILLESPIE JR. REGISTERED ENGINEER STATE OF TENNESSEE NO. 102690

08-15-14

COORDINATES ARE NAD/83(1995), ARE DATUM ADJUSTED BY THE FACTOR OF 1.000083 AND TIED TO THE TGRN. ALL ELEVATIONS ARE REFERENCED TO THE NAVD 1988.

GREATER DICKSON GAS AUTHORITY

UTILITY LAYOUT

INTERSECTION NO. 16

SCALE: 1"= 50′

$$$$SYTIME$$$$$
$$$$DGNSPEC$$$$

TYPE	YEAR	PROJECT NO.	SHEET NO.
CONST.	2014	22004-3246-14	U2-16

DICKSON COUNTY

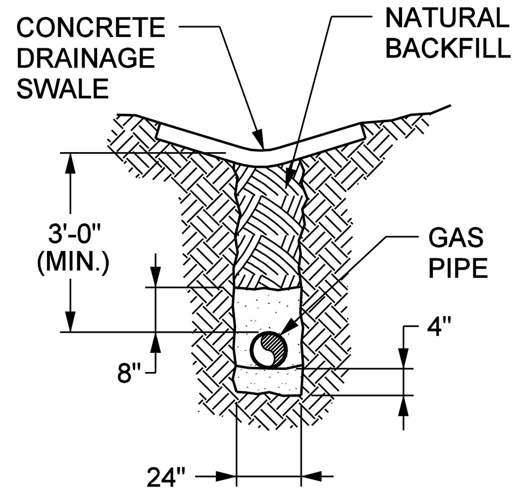

ELEVATION VIEW

NOTE:

1. MINIMUM DEPTH SHALL BE 46". MINIMUM DEPTH SHALL BE MEASURED FROM THE LOWEST SIDE OF THE DITCH. MIN. OF 36" COVER OVER PIPE.
2. IN CONSOLIDATED ROCK THE MINIMUM DEPTH MAY BE 32". MIN. OF 22" COVER OVER PIPE.
3. 4" OF DIRT, LIMESTONE DUST OR SAND SHALL BE PLACED IN THE TRENCH AND COMPACTED PRIOR TO LOWERING IN THE PIPE.
4. AFTER THE PIPE HAS BEEN LOWERED IN THE TRENCH AND INSPECTED, CONTRACTOR SHALL PROVIDE COMPACTED DIRT, LIMESTONE DUST OR SAND AROUND THE PIPE AND 8" OVER THE PIPE BEFORE BACKFILLING THE TRENCH.

PIPE TRENCH UNDER DITCH DETAIL

NOT TO SCALE

1

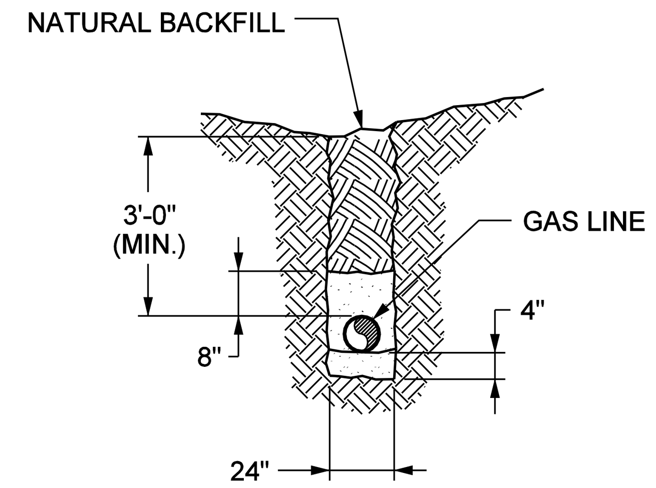

ELEVATION VIEW

NOTE:

1. MINIMUM DEPTH SHALL BE 46". MINIMUM DEPTH SHALL BE MEASURED FROM THE LOWEST SIDE OF THE DITCH. MIN. OF 36" COVER OVER PIPE.
2. IN CONSOLIDATED ROCK THE MINIMUM DEPTH MAY BE 40". MIN. OF 30" COVER OVER PIPE.
3. 4" OF DIRT, LIMESTONE DUST OR SAND SHALL BE PLACED IN THE TRENCH AND COMPACTED PRIOR TO LOWERING IN THE PIPE.
4. AFTER THE PIPE HAS BEEN LOWERED IN THE TRENCH AND INSPECTED, CONTRACTOR SHALL PROVIDE COMPACTED DIRT, LIMESTONE DUST OR SAND AROUND THE PIPE AND 8" OVER THE PIPE BEFORE BACKFILLING THE TRENCH.

PIPE TRENCH DETAIL

NOT TO SCALE

2

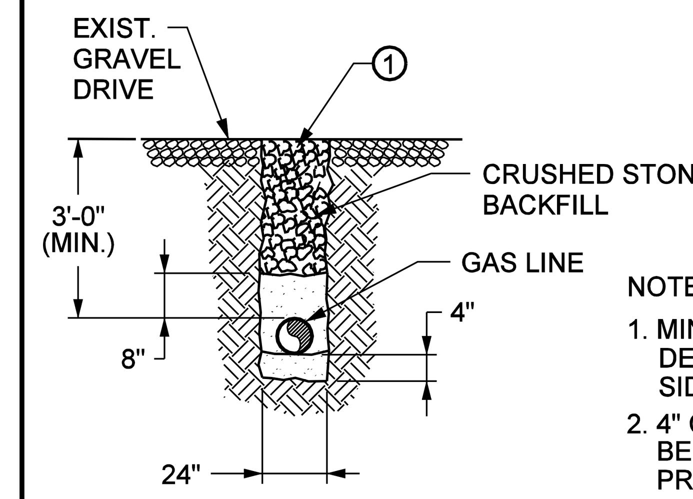

ELEVATION VIEW

(1) MINERAL AGGREGATE BASE (THICKNESS VARIES) 303-01 MINERAL AGGREGATE TYPE "A" BASE, GRADING "D"

NOTES:

1. MINIMUM DEPTH SHALL BE 36". MINIMUM DEPTH SHALL BE MEASURED FROM THE LOWEST SIDE OF THE DITCH.
2. 4" OF DIRT, LIMESTONE DUST OR SAND SHALL BE PLACED IN THE TRENCH AND COMPACTED PRIOR TO LOWERING IN THE PIPE.
3. AFTER THE PIPE HAS BEEN LOWERED IN THE TRENCH AND INSPECTED, CONTRACTOR SHALL PROVIDE COMPACTED DIRT, LIMESTONE DUST OR SAND AROUND THE PIPE AND 8" OVER THE PIPE BEFORE BACKFILLING THE TRENCH.

GRAVEL DRIVE TRENCH DETAIL

NOT TO SCALE

3

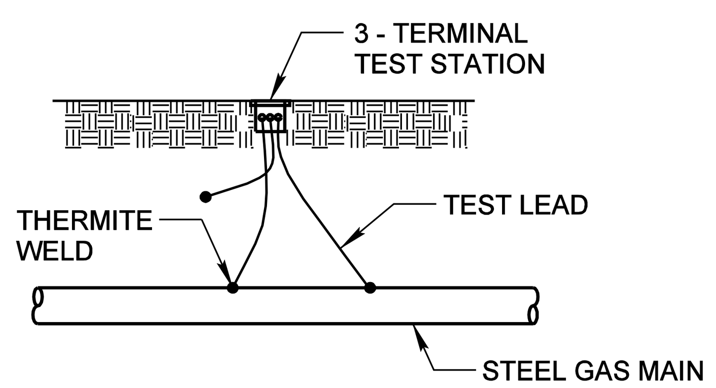

NOTES:
1. 3 - TERMINALTEST STATION (FLUSH MOUNTED).
2. WIRES TO BE THERMITE WELDED & WELD COATED.
3. 10 GAGE WIRE.

3 - TERMINAL TEST STATION (FLUSH MOUNTED)

NOT TO SCALE

4

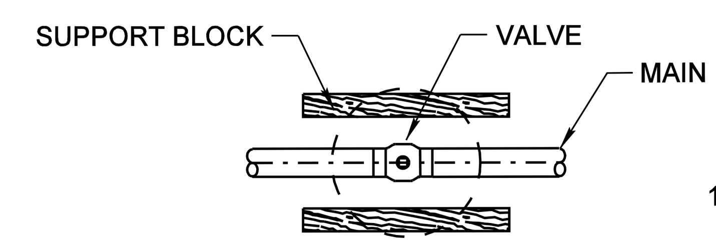

TOP VIEW

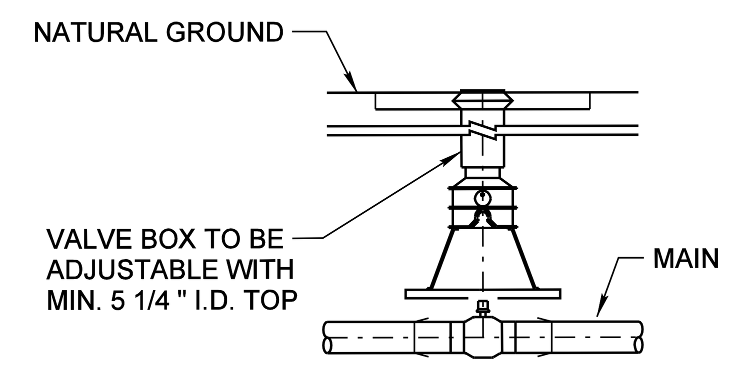

ELEVATION VIEW

NOTES:

1. COMPACT FILL
2. LAY BRICKS OR CREOSOTED WOODEN SUPPORT BLOCKS ASTRIDE VALVE, TAMP INTO PLACE.
3. PLACE VALVE BOX BASE ON SUPPORT BLOCKS TAKING CARE NOT TO CONTACT MAIN OR VALVE. ENSURE THAT THE ENTIRE WEIGHT OF BOX IS BORNE BY SUPPORT BLOCKS.
4. SPRAY INSIDE OF VALVE BOX COVER AND TOP SECTION WITH YELLOW PAINT FOR INDENTIFICATION. TOP TO BE MARKED "GAS".
5. 2' X 2' X 6" CONCRETE PAD POURED AROUND TOP OF BOX.

VALVE BOX DETAIL

NOT TO SCALE

5

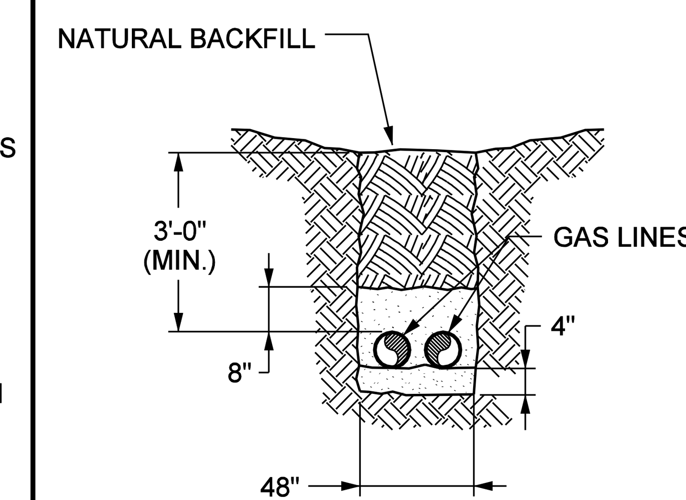

ELEVATION VIEW

NOTE:

1. MINIMUM DEPTH SHALL BE 46". MINIMUM DEPTH SHALL BE MEASURED FROM THE LOWEST SIDE OF THE DITCH. MIN. OF 36" COVER OVER PIPE.
2. IN CONSOLIDATED ROCK THE MINIMUM DEPTH MAY BE 40". MIN. OF 30" COVER OVER PIPE.
3. 4" OF DIRT, LIMESTONE DUST OR SAND SHALL BE PLACED IN THE TRENCH AND COMPACTED PRIOR TO LOWERING IN THE PIPE.
4. AFTER THE PIPE HAS BEEN LOWERED IN THE TRENCH AND INSPECTED, CONTRACTOR SHALL PROVIDE COMPACTED DIRT, LIMESTONE DUST OR SAND AROUND THE PIPE AND 8" OVER THE PIPE BEFORE BACKFILLING THE TRENCH.

PIPE TRENCH DETAIL

NOT TO SCALE

6

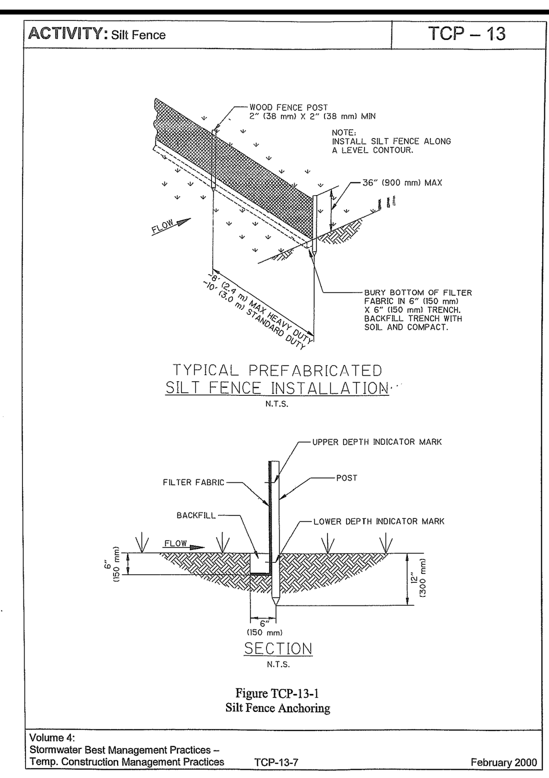

SILT FENCE ANCHORING DETAIL

NOT TO SCALE

7

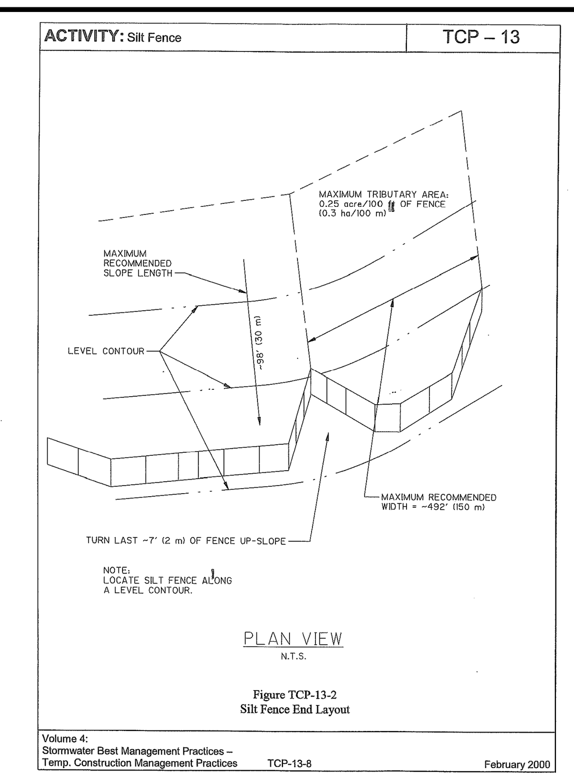

SILT FENCE END LAYOUT

NOT TO SCALE

8

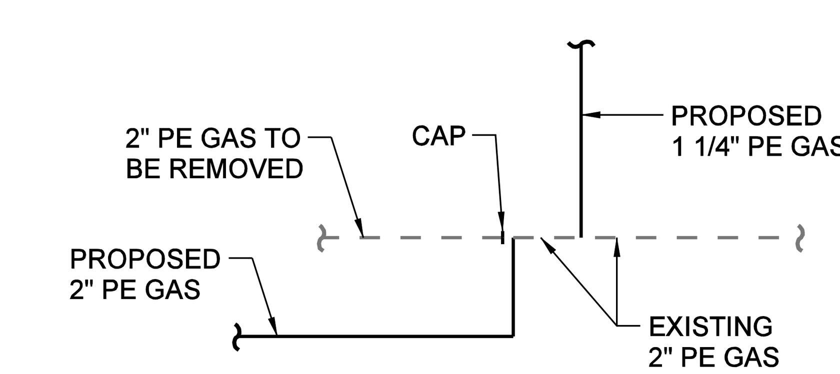

RECONNECTION - SKYLINE CIRCLE

(STA. 23+00)

NOT TO SCALE

9

10

11

12

08-15-14

COORDINATES ARE NAD/83(1995), ARE DATUM ADJUSTED BY THE FACTOR OF 1.000083 AND TIED TO THE TGRN. ALL ELEVATIONS ARE REFERENCED TO THE NAVD 1988.

GREATER DICKSON GAS AUTHORITY

CONSTRUCTION DETAILS

$$$$SYTIME$$$$$$ $$$$DGNSPEC$$

TYPE	YEAR	PROJECT NO.	SHEET NO.
CONST.	2014	22004-3246-14	U2-17

TENNESSEE D.O.T. DESIGN DIVISION

FILE NO.

JAMES R. GILLESPIE STATE OF TENNESSEE
08-15-14

SCALE: 1"= 10' HORIZ. & VERT.

GREATER DICKSON GAS AUTHORITY

NATURAL GAS RELOCATION

CROSS SECTIONS

$$$$SYTIME$$$$$$
$$$$DGNSPEC$$$$