TENNESSEE D.O.T.
DESIGN DIVISION
FILE NO.

TENN.	YEAR	SHEET NO.
	2013	
FED. AID PROJ. NO.	-	
STATE PROJ. NO.	16003-4241-04	

Index Of Sheets

SHEET NO. DESCRIPTION
SEE SHEET 1A FOR INDEX

STATE OF TENNESSEE
DEPARTMENT OF TRANSPORTATION
BUREAU OF ENGINEERING

COFFEE COUNTY

STATE ROUTE 2 OVER LITTLE DUCK RIVER

BRIDGE REPAIR

STATE HIGHWAY NO. 2 F.A.H.S. NO. NA

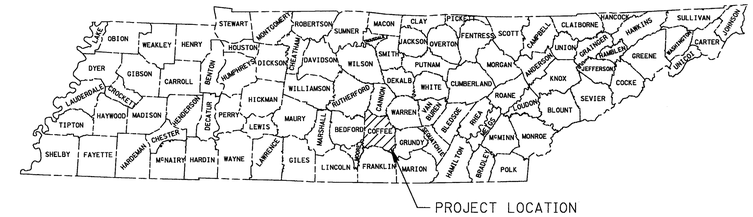

STATE ROUTE 2 OVER LITTLE DUCK RIVER
BRIDGE NO. 16-SR002-13.68 RIGHT & LEFT

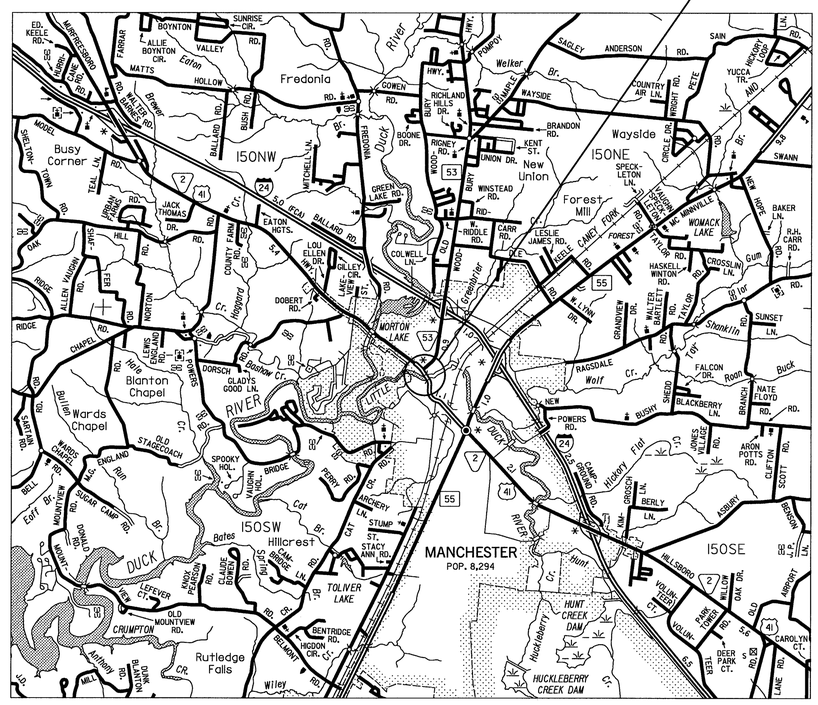

UNOFFICIAL SET

NOT FOR BIDDING

APPROVED: Paul D. Degges
PAUL D. DEGGES, DIRECTOR DESIGN DIVISION

DATE

JOHN SCHROER, COMMISSIONER

U.S. DEPARTMENT OF TRANSPORTATION
FEDERAL HIGHWAY ADMINISTRATION

APPROVED:

DIVISION ADMINISTRATOR DATE

SPECIAL NOTES

PROPOSALS MAY BE REJECTED BY THE COMMISSIONER IF ANY OF THE UNIT PRICES CONTAINED THEREIN ARE OBVIOUSLY UNBALANCED, EITHER EXCESSIVE OR BELOW THE REASONABLE COST ANALYSIS VALUE.

THIS PROJECT TO BE CONSTRUCTED UNDER THE STANDARD SPECIFICATIONS OF THE TENNESSEE DEPARTMENT OF TRANSPORTATION DATED MARCH 1, 2006 AND ADDITIONAL SPECIFICATIONS AND SPECIAL PROVISIONS CONTAINED IN THE PLANS AND IN THE PROPOSAL CONTRACT.

TDOT STRUCTURAL SPECIALIST 2 VALERIE NEWBERRY

DESIGNER TRCWW, INC. CHECKED BY W. PETRONE

P.E. NO. 16003-4241-04
PIN NO. 117839.00

NOT TO SCALE

ROUTE	ADT	YEAR	POSTED SPEED LIMIT
STATE ROUTE 2	11978	2013	40 MPH

WILFORD A. PETRONE
REGISTERED ENGINEER
AGRICULTURE
NO. 13774
STATE OF TENNESSEE
11-5-01

TENNESSEE D.O.T. | DESIGN DIVISION | FILE NO.

TYPE	YEAR	PROJECT NO.	SHEET NO.
CONST.	2014	16003-4241-04	1A

1 UTILITY SHEETS ADDED 04-24-14

Index Of Sheets

SHEET NO.	DESCRIPTION
1	TITLE SHEET
1A	INDEX SHEET
1B	PROJECT COMMITMENTS
2	BRIDGE ESTIMATED QUANTITIES
2A	BRIDGE GENERAL NOTES
2B	ESTIMATED ROADWAY QUANTITIES
2C	ROADWAY NOTES AND DETAILS
2D	TRAFFIC CONTROL PLAN
2E	TRAFFIC CONTROL PLAN
2F	EROSION CONTROL DETAILS AND NOTES
U1-1	UTILITIES
1 U1-2	UTILITIES

DRAWING NO.	CURRENT REVISION DATE	DESCRIPTION
		STANDARD ROADWAY DRAWINGS
RD-A-1	12-18-99	STANDARD ABBREVIATIONS
RD-L-1	10-26-94	STANDARD LEGEND
RD-L-3	4-15-04	STANDARD LEGEND FOR SIGNALIZATION AND LIGHTING
RD-L-4	4-15-04	STANDARD LEGEND FOR SIGNALIZATION AND LIGHTING
		SAFETY APPURTENANCES AND FENCE
S-GR-11	11-26-07	W-BEAM AND THRIE BEAM BARRIER RAIL AND RUB RAIL ALTERNATES
S-GR-12	5-27-03	W-BEAM BARRIER POST DETAILS AND SPECIFICATIONS
S-GR-13	5-27-03	BARRIER RAIL MOUNTING POST BLOCK-OUTS WITH VERTICAL ADJUSTMENT HOLES
S-GR-13A		BARRIER RAIL MOUNTING POST FOR PLASTIC BLOCK-OUTS WITH HORIZONTAL ADJUSTMENT HOLES
S-GR-14	4-17-12	W-BEAM BARRIER FASTENING HARDWARE AND BRIDGE APPROACH DELINEATORS
S-GR-15	6-30-05	W-BEAM BARRIER TERMINAL ELEMENT DETAILS
S-GR-23	9-11-02	GUARDRAIL ATTACHMENT TO STRUCTURES AND PROTECTIVE GUARDRAIL AT BRIDGE END DETAILS
S-GR-24	5-15-08	GUARDRAIL END TERMINALS AT BRIDGE ENDS
S-GR-38	6-30-09	DETAILS FOR CONSTRUCTION OF EARTH PAD FOR TYPE 38 GUARDRAIL END TERMINALS
S-GR-43		TANGENTIAL GUARDRAIL TERMINAL ANCHOR (TYPE 38) POST LAYOUT AND ERECTION DETAILS
S-GR-44		TANGENTIAL GUARDRAIL TERMINAL ANCHOR (TYPE 38)(2 TUBE) GUARDRAIL ELEMENT POST AND ASSEMBLY DETAILS
		TRAFFIC CONTROL APPURTENANCES
T-M-1	11-01-11	DETAILS OF PAVEMENT MARKINGS FOR CONVENTIONAL ROADS AND MARKING ABBREVIATIONS
T-M-2	1-12-12	DETAILS OF PAVEMENT MARKINGS FOR CONVENTIONAL ROADS
T-PBR-1	6-30-09	INTERCONNECTED PORTABLE BARRIER RAIL
T-PBR-2	11-01-11	DETAIL FOR VERTICAL PANELS AND FLEXIBLE DELINEATORS
T-SG-1	11-01-11	WOODEN POLE DETAILS FOR SPAN MOUNTED SIGNALS
T-SG-2	7-29-04	LOOP LEAD-INS CONDUIT AND PULL BOXES
T-SG-3	11-11-04	STANDARD NOTES AND DETAILS OF INDUCTIVE LOOPS
T-SG-3A		ALTERNATE DETECTION DETAILS
T-SG-4		SPAN WIRE AND MESSENGER CABLE DETAILS
T-SG-5	7-29-04	CONTROLLER CABINET DETAILS
T-SG-7	1-11-11	SIGNAL HEAD ASSEMBLIES AND PEDESTRIAN PUSH BUTTON DETAILS
T-SG-7A	11-01-11	TYPICAL SIGN HEAD PLACEMENT
T-WZ-10	4-02-12	ADVANCE ROAD WORK SIGNING ON HIGHWAYS AND FREEWAYS
T-WZ-32	3-03-06	TRAFFIC CONTROL PLAN SIGNAL LAYOUT FOR TRAFFIC SIGNAL AT TWO LANE BRIDGE RECONSTRUCTION SITE
T-WZ-34	9-01-05	TRAFFIC CONTROL PLAN GENERAL NOTES FOR TRAFFIC SIGNAL AT TWO LANE BRIDGE RECONSTRUCTION SITE
T-WZ-35	4-02-12	TRAFFIC CONTROL PLAN PAY ITEM AND SIGN DETAILS FOR TRAFFIC SIGNAL AT TWO LANE BRIDGE RECONSTRUCTION SITE
		ROADWAY AND PAVEMENT APPURTENANCES
RP-NMC-11	2-28-02	STANDARD VERTICAL (NONMOUNTABLE) CONCRETE CURBS AND CONCRETE CURBS AND GUTTERS
RP-S-7	7-29-96	DETAILS FOR STANDARD SIDEWALKS
		EROSION PREVENTION & SEDIMENT CONTROL
EC-STR-3C	4-01-08	SILT FENCE WITH WIRE BACKING
EC-STR-3E	4-01-08	SILT FENCE FABRIC JOINING DETAILS
		SPECIAL PROVISIONS
SP202ACM		REMOVAL OF ASBESTOS CONTAINING MATERIAL (ACM)

LIST OF BRIDGE DRAWINGS

DWG. NO.	DESCRIPTION
BR-114-59	GENERAL ELEVATIONS
BR-114-60	LAYOUT OF BRIDGE
BR-114-61	BRIDGE ESTIMATED QUANTITIES
BR-114-62	BRIDGE GENERAL NOTES
BR-114-63	PHASED CONSTRUCTION
BR-114-64	DEMOLITION PLANS & DETAILS
BR-114-65	SUPERSTRUCTURE CROSS SECTION LEFT LANE BRIDGE
BR-114-66	SLAB PLAN LEFT LANE BRIDGE
BR-114-66A	SLAB PLAN DETAILS LEFT LANE BRIDGE
BR-114-67	FRAMING PLAN LEFT LANE BRIDGE
BR-114-67A	FRAMING PLAN DETAILS LEFT LANE BRIDGE
BR-114-68	BILL OF STEEL LEFT LANE
BR-114-69	PRESTRESSED BEAMS LEFT LANE BRIDGE
BR-114-70	LEFT LANE ABUTMENT DETAILS
BR-114-70A	LEFT LANE PIER DETAILS
BR-114-71	SUPERSTRUCTURE CROSS SECTION RIGHT LANE BRIDGE
BR-114-72	SLAB PLAN RIGHT LANE BRIDGE
BR-114-72A	SLAB PLAN DETAILS RIGHT LANE BRIDGE
BR-114-73	FRAMING PLAN AND DETAILS RIGHT LANE BRIDGE
BR-114-73A	FRAMING PLAN DETAILS RIGHT LANE BRIDGE
BR-114-74	BILL OF STEEL RIGHT LANE
BR-114-75	PRESTRESSED BEAM BM1R RIGHT LANE BRIDGE
BR-114-76	PRESTRESSED BEAMS BM2R-BM6 RIGHT LANE BRIDGE
BR-114-77	RIGHT LANE ABUTMENT DETAILS
BR-114-77A	RIGHT LANE PIER DETAILS
BR-114-78	GIRDER REPAIR DETAILS
BR-114-79	ABUTMENTS/PIERS REPAIR DETAILS
BR-114-80	STRIP SEAL EXPANSION JOINT DETAILS
BR-114-81	REPAIR DETAILS
BR-114-82	EMBANKMENT AND SIDEWALK DETAILS

STANDARD BRIDGE DRAWINGS

STD-1-1SS	06-01-11	BRIDGE RAILING SINGLE SLOPE CONCRETE PARAPET
STD-1-2SS		STEEL SLIDER PLATE ASSEMBLIES FOR SINGLE SLOPE CONCRETE AND BRIDGE DECK DRAIN DETAILS - 2007
STD-2-1	11-01-10	BRIDGE MOUNTED INTERCONNECTED PORTABLE BARRIER RAIL
STD-4-1	4-08-05	STD. PRECAST PRESTRESSED BRIDGE DECK PANELS GENERAL DETAILS
STD-4-2	4-08-05	STD. PRECAST PRESTRESSED BRIDGE DECK PANELS DESIGN CRITERIA
STD-4-3	3-02-05	STD. PRECAST PRESTRESSED BRIDGE DECK PANELS GENERAL DETAILS
STD-4-4	6-10-96	STD. PRECAST PRESTRESSED BRIDGE DECK PANELS CONSTRUCTION DETAILS
STD-9-1	10-07-08	REINFORCING BAR SUPPORT DETAILS FOR CONCRETE SLABS
STD-11-1	8-13-02	BRIDGE RAILING WITH STRUCTURAL TUBING
STD-14-2	11-01-10	STANDARD DETAILS AND INTERIOR DIAPHRAGMS FOR I-BEAMS
SBR-2-115	1-04-96	GENERAL NOTES AND DETAILS FOR EXPANSION JOINT REPLACEMENT CONSTRUCTION TYPES "A" THRU "J" - 1991
SBR-2-116	1-04-96	GENERAL NOTES AND DETAILS FOR EXPANSION JOINT REPLACEMENT TYPES "A" THRU "J"- 1991
SBR-2-120	5-30-96	STRIP SEAL EXPANSION JOINTS - REPLACEMENT CONSTRUCTION DETAILS TYPES "G" AND "H" - 1991

UNOFFICIAL SET

NOT FOR BIDDING

LIST OF REFERENCE DRAWINGS

(TO BE PRINTED WITH PLANS)

LEFT LANE BRIDGE

DWG. NO.	DESCRIPTION
A-14-66	DECK GIRDER TYPE
B-1-126	LAYOUT OF BRIDGE
B-1-127	ABUTMENT NO. 1
B-1-128	DETAILS OF PIERS 1-5
B-1-129	ABUTMENT NO. 2
B-2-29	SLAB DETAIL
G-8-107	LAYOUT OF BRIDGE WIDENING
G-8-108 - G-8-112	DETAILS OF BRIDGE WIDENING

RIGHT LANE BRIDGE

F-9-148	LAYOUT OF BRIDGE
F-9-149	SPANS 1-6
F-9-150	ABUTMENT NO. 1
F-9-151	PIER 1
F-9-152	PIERS 2-5
F-9-153	ABUTMENT NO. 2
F-9-154	MISCELLANEOUS DETAILS

STATE OF TENNESSEE
DEPARTMENT OF TRANSPORTATION

INDEX SHEET

BR. NO. 16-SR002-13.68

TENNESSEE D.O.T.
DESIGN DIVISION
FILE NO.

TYPE	YEAR	PROJECT NO.	SHEET NO.
CONST.	2013	16003-4241-04	1B

PROJECT COMMITMENTS

COMMITMENT ID	SOURCE DIVISION	DESCRIPTION	STA./LOCATION
EDHZ001	ENVIRONMENTAL DIVISION, HAZARDOUS MATERIALS	TO MINIMIZE THE RISK TO CONSTRUCTION WORKERS, TDOT IS REQUIRED TO ENDSURE THE REMOVAL OF ASBESTOS CONTAINING MATERIALS (ACM) FROM BRIDGES THAT ARE BEING DEMOLISHED OR REHABILITATED. IF THE ACM WILL BE DISTURBED DURING REPAIR ACTIVITIES, ASBESTOS ABATEMENT MUST BE COMPLETED PRIOR TO ANY DEMOLITION ACTIVITIES. ABATEMENT SHOULD BE ACCOMPLISHED PER SP202ACM SPECIAL PROVISION REGARDING REMOVAL OF ASBESTOS CONTAINING MATERIALS. BRIDGE# 16SR0020013 AND BR# 16SR0020014 HAVE ACM IN THE DECK DRAINS.	ALL BRIDGE DECK DRAIN LOCATIONS (SEE SHEET BR-114-60 FOR LOCATIONS)
		ABATEMENT OF THESE MATERIALS WILL REQUIRE TRAINED WORKERS AND A COMPETENT PERSON TO OVERSEE THE WORK (AN ASBESTOS SUPERVISOR). ADDITIONALLY, STATE OF TENNESSEE ASBESTOS ACCREDITATION REQUIREMENTS (TCA 1200-01-20) MANDATE THAT SUCH WORK BE PERFORMED BY AN ACCREDITED FIRM (CONTRACTOR) USING ACCREDITED ABATEMENT WORKERS AND SUPERVISORS. IF ABATEMENT ACTIVITIES ARE NEEDED, A 10-DAY NOTIFICATION TO THE DEPARTMENT OF AIR POLLUTION CONTROL MAY BE REQUIRED.	

UNOFFICIAL SET

NOT FOR BIDDING

STATE OF TENNESSEE
DEPARTMENT OF TRANSPORTATION

PROJECT COMMITMENTS

BR. NO. 16-SR002-13.68

PROJECT NO.	YEAR	SHEET NO.
16003-4241-04	2013	2

REVISIONS

NO.	DATE	BY	BRIEF DESCRIPTION

ESTIMATED BRIDGE QUANTITIES

	ITEM NO.	DESCRIPTION	UNIT	LEFT LANE BRIDGE	RIGHT LANE BRIDGE	TOTAL
17	202-01.02	REMOVAL OF ASBESTOS	L.S.	.5	.5	1
1	202-04.01	REMOVAL OF STRUCTURES (EXISTING BRIDGE)	L.S.	.5	.5	1
14 2	303-01.02	GRANULAR BACKFILL (BRIDGES)	TON	225	225	450
15	603-02.01	REPAINTING STEEL STRUCTURES (BR. NO. 16-SR002-13.86 LT. & RT)	LS	.5	.5	1
16	603-05.20	CONTAINMENT & DISPOSAL OF WASTE (EXISTING PAINT)	L.S.	.5	.5	1
	604-02.03	EPOXY COATED REINFORCING STEEL	LBS.	60725	61720	122445
8	604-03.01	CLASS "A" CONCRETE (BRIDGES)	C.Y.	7	8	15
	604-03.02	STEEL BAR REINFORCEMENT (BRIDGES)	LBS.	3415	3635	7050
9	604-03.09	CLASS "D" CONCRETE (BRIDGE DECK)	C.Y.	334	342	676
	604-04.01	APPLIED TEXTURE FINISH (NEW STRUCTURES)	S.Y.	847	900	1747
	604-04.02	APPLIED TEXTURE FINISH (EXISTING STRUCTURES)	S.Y.	987	1399	2386
	604-05.31	BRIDGE DECK GROOVING (MECHANICAL)	S.Y.	1012	1008	2020
14 10	604-10.05	CONCRETE	S.F.	805	123	928
6	604-10.14	REMOVE EXISTING WEARING SURFACE	L.S.	.5	.5	1
5	604-10.17	NON-PENETRATING CONCRETE SEAL	S.Y.	40	20	60
14	604-10.30	BRIDGE DECK REPAIR (FULL DEPTH OF SLAB)	S.Y.	50	10	60
4	604-10.47	EXPANSION JOINT REPAIRS (TYPE H)	L.F.	60	60	120
14	604-10.50	BRIDGE DECK REPAIR (PARTIAL DEPTH OF SLAB)	S.Y.	100	100	200
14 11	604-10.54	CONCRETE REPAIRS	S.F.	69	161	230
14	604-10.58	EPOXY INJECTION (INJECTION)	GAL.	8	4	12
14	604-10.62	EPOXY INJECTION REPAIR (COMPLETE AND IN PLACE)	L.F.	408	157	565
	604-36	SCARIFYING	S.Y.	956	895	1851
3	615-01.02	PRESTRESSED CONCRETE I-BEAM (TYPE II)	L.F.	310	309	619
7	620-05	CONCRETE PARAPET WITH STRUCTURAL TUBING	L.F.	642	639	1281
12	617-02	BRIDGE DECK CRACK SEALING	L.F.	967	963	1930
13	617-05	SEALANT (HMWM)	GAL.	13	13	26
	709-05.08	MACHINED RIP-RAP (CLASS "B")	TON	-	-	3110

FOOTNOTES:

1. COMPLETE REMOVAL OF CONCRETE CANTILEVERS, SIDEWALK, PARAPET, GIRDER SUPPORTING SIDEWALK, AND THE PORTION OF DECK SUPPORTING SIDEWALK (EXIST CONCRETE DECK AND GIRDERS SHALL REMAIN) APPROX. 11.58' X 319.5 (LEFT LANE BRIDGE) AND 13.17' X 318' (RIGHT LANE BRIDGE). ALSO PARTIAL REMOVAL OF ABUTMENTS AND PIER CAPS ARE INCLUDED IN THIS ITEM. THE CONTRACTOR SHALL BE RESPONSIBLE FOR REMOVAL AND DISPOSAL OF ALL MATERIALS FROM THE SITE.

2. GRANULAR BACKFILL SHALL BE CLASS "A" GRADING, "D" MATERIAL AND INCLUDES ALL COST TO REPAIR SETTLEMENT AREAS AT ABUTMENTS AS SHOWN ON DWG BR-114-82.

3. INCLUDES ALL COST NECESSARY FOR LABOR AND MATERIALS TO INSTALL PRESTRESSED CONCRETE I-BEAM AS WELL AS ELASTOMERIC PADS AND RUBBER BONDING CEMENT.

4. THE EXPANSION JOINT AT LEFT LANE BRIDGE PIER NO. 3 AND RIGHT LANE BRIDGE PIER NO. 1 SHALL BE IN ACCORDANCE WITH SECTION 623.03 OF THE STANDARD SPECIFICATIONS. THE TOTAL REQUIRED MOVEMENT IS 4 INCHES. SHOP DRAWINGS SHALL BE SUBMITTED TO THE ENGINEER OF STRUCTURES FOR APPROVAL. INCLUDES ALL COSTS TO INSTALL TYPE "H" EXPANSION JOINTS AT BOTH LOCATIONS.

5. THE COST OF ALL MATERIALS AND LABOR TO APPLY NON-PENETRATING CONCRETE SEAL AS DESCRIDED IN GENERAL NOTES.

6. INCLUDES ALL COST FOR REMOVING EXISTING ASPHALT OVERLAY FROM BEGINNING OF BRIDGE TO END OF BRIDGE. AVERAGE THICKNESS OF OVERLAY IS 3".

7. COST OF 18 BRIDGE DECK DRAINS TO BE INCLUDED IN THE UNIT PRICE BID FOR THE PARAPET. SEE BR-114-60 FOR LOCATION AND INFORMATION FOR TYPE OF DRAINS TO CONSTRUCTED IN ACCORDANCE WITH STD. DWG. STD-1-2.

8. COST OF MATERIALS AND LABOR NECESSARY FOR THE CONSTRUCTION AND MODIFCATION OF RISER BLOCKS AND MODIFICATION TO ABUTMENTS AND PIERS AS SHOWN ON DWGS. BR-114-70, BR-114-70A, BR-114-77 AND BR-114-77A ARE INCLUDED IN THE UNIT PRICE BID FOR CLASS "A" CONCRETE (BRIDGES).

9. INCLUDES COST OF ALL LABOR, MATERIALS AND EQUIPMENT REQUIRED TO PLACE NEW 8¼" CONCRETE SLAB, 4½" CONCRETE OVERLAY, DIAPHRAGMS, BACKWALLS AND BEAM FILLET.

10. INCLUDES ALL COST TO REPAIR DESIGNATED DELAMINATED AREAS ON SUBSTRUCTURES AND EXIST. BEAMS WITH HIGH EARLY STRENGTH CONCRETE.

11. INCLUDES ALL COST TO REPAIR DESIGNATED DELAMINATED AREAS ON SUBSTRUCTURES AND EXIST. BEAMS WITH QUICK-SET PACTHING MATERIAL.

12. INCLUDES ALL COST TO INSTALL BRIDGE DECK CRACK SEALER (HMWM) AT CONSTRUCTION JOINTS. COST SHALL INCLUDE DECK SURFACE PREPARATION, CLEANING, LABOR, AND ALL MISC. MATERIALS REQ'D TO SEAL THE JOINTS ACCORDING TO SPECIAL PROVISION 604CR AND MANUFACTURERS SPECIFICATIONS. THIS ITEM DOES NOT INCLUDE THE COST OF FURNISHING THE BRIDGE DECK SEALER (HMWM) FOR SEALING THE CONSTRUCTION JOINTS.

13. INCLUDES ALL COST TO FURNISH THE SEALER MATERIAL (HMWM) FOR SEALING THE CONSTRUCTION JOINTS. THE SEALER SHALL BE IN ACCORDANCE WITH SPECIAL PROVISION 604CR.

14. ITEM SHALL BE BID AS A CONTIGENCY AND MAY BE INCREASED, DECREASED OR ELIMINATED AS DIRECTED BY THE ENGINEER.

15. INCLUDES ALL COST TO BLAST CLEAN AND TO PAINT EXISTING BEARING DEVICES.

16. THE COST OF ALL MATERIALS AND LABOR TO CONTAIN AND DISPOSE OF EXISTING PAINT SYSTEM. SEE NOTES ON DWG. BR-114-62.

17. NOTE: EXISTING DRAINS CONTAIN ASBESTOS MATERIALS. SEE SPECIAL PROVISION SP202ACM & NOTE ON SHEET NO. BR-114-62.

UNOFFICIAL SET

NOT FOR BIDDING

WAYNOR A. PETRONE
REGISTERED ENGINEER
AGRICULTURE
05-01-13
NO. 13174
STATE OF TENNESSEE

STATE OF TENNESSEE
DEPARTMENT OF TRANSPORTATION
BUREAU OF HIGHWAYS

BRIDGE ESTIMATED QUANTITIES
STATE ROUTE 2
OVER
LITTLE DUCK RIVER
BRIDGE NO. 16-SR002-13.68
COFFEE COUNTY
2013

DESIGNED BY	WAP	DATE	7-12
DRAWN BY	MLP	DATE	7-12
SUPERVISED BY	WAP	DATE	7-12
CHECKED BY	JCP	DATE	8-12

PROJECT NO.	YEAR	SHEET NO.
16003-4241-04	2013	2A

REVISIONS

NO.	DATE	BY	BRIEF DESCRIPTION

GENERAL NOTES

SPECIFICATIONS: STANDARD ROAD AND BRIDGE SPECIFICATIONS OF THE TENNESSEE DEPARTMENT OF TRANSPORTATION (MARCH 1, 2006 EDITION).

LOADING: HL-93 (DEAD LOADS TO INCLUDE 35 PSF FOR FUTURE OVERLAY).

DESIGN SPECIFICATIONS: AASHTO 2007 EDITION W/ ADDENDA.

CONCRETE: EXCEPT AS NOTED OTHERWISE, SHALL BE:
CLASS "A" (CAST-IN-PLACE) SHALL BE IN ACCORDANCE WITH THE STANDARD SPECIFICATIONS.
CLASS "D" CONCRETE FOR BRIDGE DECK SHALL BE IN ACCORDANCE WITH THE STANDARD SPECIFICATIONS.

HIGH EARLY STRENGTH CONCRETE (10 DAYS): THE MIX TO MEET THE REQUIREMENTS OF THE STANDARD SPECIFICATIONS, CLASS "A", EXCEPT THE CEMENT CONTENT SHALL BE A MINIMUM OF 714 LBS., THE WATER CEMENT RATIO SHALL BE A MAXIMUM OF 0.40, NO FLY ASH REPLACEMENT WILL BE PERMITTED, AND THE MINIMUM 28 DAY COMPRESSIVE STRENGTH SHALL BE 3,500 PSI. TRAFFIC SHALL NOT BE PERMITTED ON ANY OF THE REPAIR AREAS UNTIL TEST SPECIMENS ATTAIN A COMPRESSIVE STRENGTH OF 3,000 PSI MINIMUM AND THE CONCRETE HAS BEEN IN PLACE A MINIMUM OF TEN (10) DAYS.

BRIDGE RAIL SYSTEM: BUILD BRIDGE RAILING ACCORDING TO STANDARD DRAWING NO. STD-11-1. THE RAILING SHALL BE FORMED AND CAST PLUMB, NOT PERPENDICULAR TO THE SLAB. THE DIMENSIONS AT THE TRAFFIC FACE SHALL BE KEPT CONSTANT, WITH VARIATION DUE TO CROSS SLOPE ACCOMMODATED AT THE REAR FACE.

BRIDGE DECK SURFACE FINISH: TO BE IN ACCORDANCE WITH NOTE "C", SECTION 604.22 OF THE STANDARD SPECIFICATIONS. THE LIMITS OF THE GROOVING SHALL BE WITHIN ONE FOOT OF RAIL FACE FOR THE FULL LENGTH OF THE BRIDGE.

NOTE: THE CONTRACTOR SHALL PROVIDE 100% CONVENTIONAL FALL PROTECTION FOR WORKERS INSTALLING DECKING ABOVE 15 FEET.

CONCRETE CURING: ALL CONCRETE IN REPAIR AREA SHALL BE CURED ACCORDING TO THE STANDARD SPECIFICATIONS.

MECHANICAL BAR SPLICERS: MUST BE ON THE APPROVED LIST MAINTAINED BY THE DIVISION OF MATERIALS AND TESTS. THE BAR SPLICER SHALL MEET AASHTO STANDARD SPECIFICATIONS FOR MECHANICAL CONNECTION. WHEN EPOXY COATING IS REQUIRED, THE EXPOSED THREADS SHALL BE REPAIRED AFTER SPLICING ACCORDING TO THE STD. SPECIFICAITION SECTION 907. THE COST OF FURNISHING THE BAR SPLICERS, (AND EXPOXY COATING WHEN REQUIRED) INCLUDING ALL LABOR AND MATERIALS NECESSARY FOR COMPLETE INSTALLATION, SHALL BE INCLUDED IN THE UNIT PRICE BID FOR ITEM NO. 604-02.03, LBS.

FORMS AND FALSEWORK: CONCRETE FORM WORK, FALSEWORK, AND TEMPORARY SUPPORTS SHALL BE REMOVED FROM THE JOB SITE AFTER WORK IS COMPLETED. COST OF FORMS, FALSEWORK, AND TEMPORARY SUPPORT REMOVAL SHALL BE INCLUDED IN ITEMS BID ON. THIS WORK SHALL BE COMPLETED BEFORE FINAL PAYMENT IS APPROVED.

REINFORCING STEEL: SHALL BE ASTM A615, GRADE 60 UNLESS NOTED OTHERWISE. SEE SECTIONS 604 AND 907 OF THE STANDARD SPECIFICATIONS.

BEARING DEVICES: SHALL BE IN ACCORDANCE WITH THE DETAILS, DIMENSIONS AND NOTES SHOWN ON DRAWINGS BR-114-69, BR-114-70, BR-114-70A, BR-114-75, BR-114-76, BR-114-77 AND BR-114-77A.

GROUTED BARS IN DRILLED HOLES: HORIZONTALLY DRILLED HOLES SHALL BE DRILLED 1/2" IN DIAMETER LARGER THAN THE BAR, CLEANED PACKED WITH NON-SHRINK GROUT, AND THE BAR ROTATED (NOT DRIVEN) TO ITS SEAT. VERTICALLY DRILLED HOLES SHALL BE DRILLED 1/4" IN DIAMETER LARGER THAN THE BAR, CLEANED, PACKED WITH EPOXY GROUT AND THE BAR SHALL BE DRIVEN TO ITS SEAT. ALL GROUTING MATERIAL SHALL BE APPROVED BY T.D.O.T. MATERIALS AND TESTS.

REQUIREMENTS AND RESTRICTIONS FOR PHASE CONSTRUCTION: THE LOCATION OF LONGITUDINAL CONSTRUCTION JOINTS SHALL NOT BE CHANGED TO ACCOMMODATE REMAIN-IN-PLACE DECK FORMS. ONE 10 FOOT MINIMUM WIDE TRAFFIC LANE SHALL BE MAINTAINED AT ALL TIMES.

SPECIAL NOTE TO CONTRACTOR: CONTRACTOR SHALL USE EXTREME CARE AND TAKE ANY MEASURE NECESSARY TO INSURE THAT NO DEBRIS IS DROPPED INTO THE STREAM. THIS SHALL BE ACCOMPLISHED BY THE USE OF BASKETS, NETTING, WRAPPING, WORK PLATFORM, OR SIMILARLY EFFECTIVE MEANS. ANY DEBRIS WHICH IS ALLOWED TO DROP ON THE BANKS BELOW THE BRIDGE SHALL NOT BE ALLOWED TO ENTER THE STREAM AND SHALL BE REMOVED AND DISPOSED OF BY THE CONTRACTOR. COST OF REMOVING AND DISPOSING OF DEBRIS SHALL BE INCLUDED IN ITEMS BID. ANY CONSTRUCTION WITHIN THE STREAM CHANNEL SHALL BE SEPARATED FROM FLOWING WATER, AND ACCOMPLISHED DURING LOW FLOW CONDITIONS. THIS SHALL BE ACCOMPLISHED BY THE USE OF FLUMES, DIVERSION, CHANNEL WITH SAND BAG BERM, DIVERSION PIPE OR IN SOME CASES COFFERDAMS.

DEMOLITION: THE CONTRACTOR SHALL TAKE SPECIAL CARE TO PROTECT ANY PARTS OF THE STRUCTURE THAT ARE NOT TO BE REMOVED SPECIFICALLY. THE CONTRACTOR IS NOT ALLOWED TO USE A HYDRAULIC RAM MOUNTED ON A BACKHOE (COMMONLY CALLED A HOE RAM) OR OTHER SIMILARLY HEAVY EQUIPMENT FOR CONCRETE REMOVAL. PNEUMATIC HAMMERS MAY BE USED TO REMOVE UNSOUND CONCRETE. FOR FULL DEPTH OF CONCRETE SLAB REMOVAL EXCEPT OVER BEAMS, THE MAXIMUM HAMMER SIZE IS 90 POUND CLASS. FOR PARTIAL DEPTH OF CONCRETE SLAB REMOVAL AND ANY WORK OVER BEAMS, THE MAXIMUM HAMMER SIZE IS 60 POUND CLASS. SAWING OR CUTTING OF THE CONCRETE IS ACCEPTABLE SO LONG AS ANY SPECIFIED PROJECTION OF THE EXISTING REINFORCING STEEL IS MAINTAINED. ALL DEVICES PROPOSED FOR CONCRETE DEMOLITION SHALL MEET THE APPROVAL OF THE ENGINEER.

SPECIAL NOTE FOR UTILITIES: CARE SHALL BE TAKEN WHILE REMOVING AND REPLACING BRIDGE COMPONENTS SO AS NOT TO DISTURB OR DAMAGE ANY UTILITIES.

RIP-RAP: MACHINED RIP-RAP SHALL BE CLASS "B" IN ACCORDANCE WITH SECTION 709 OF THE STANDARD SPECIFICATIONS AND SHALL BE MEASURED AND PAID FOR UNDER ITEM NO. 709-05.08 (TON)

FINISHING CONCRETE SURFACES: CONCRETE FINISHING SHALL BE IN ACCORDANCE WITH SECTION 604.21 OF THE TENNESSEE STANDARD SPECIFICATIONS WITH THE CONTRACTOR HAVING THE OPTION OF USING EITHER A CLASS II FINISH OR A CLASS I FINISH FOLLOWED BY AN APPLIED TEXTURE FINISH. THE COST OF FINISHING CONCRETE SHALL BE INCLUDED IN THE UNIT PRICE BID FOR ITEM NO. 604-03.01, CLASS "A" CONCRETE, C.Y.

NOTE: THE CONTRACTOR SHALL CUT ONE (1) INCH DEEP INTO THE SLAB BEFORE REMOVING CONCRETE. ALL TRANSVERSE REINFORCING STEEL SHALL REMAIN IN PLACE AND BE SPLICED WITH NEW REINFORCING. THE CONTRACTOR IS RESPONSIBLE FOR AND TAKE ALL PRECAUTIONS TO ENSURE STABILITY OF THE STRUCTURE DURING REPAIRS.

NOTE: THE CONTRACTOR SHALL FIELD VERIFY ALL DIMENSIONS AND QUANTITIES BEFORE ORDERING ANY MATERIALS.

QUICK SET PATCHING MATERIALS: QUICK-SET PATCHING MATERIAL SHALL BE A POLYMER MODIFIED CEMENTIOUS PATCHING MATERIAL. SEE TDOT QUALIFIED PRODUCTS LIST 13, SECTION B.6 FOR ACCEPTABLE PATCHING MATERIALS.

EXPANSION JOINTS: FOR ADDITIONAL GENERAL NOTES APPLICABLE TO STRIP SEAL EXPANSION JOINTS, SEE STANDARD DRAWING NOS. SBR-2-115, SBR-2-116 AND SBR-2-120.

BRIDGE DECK FORMS: BRIDGE DECK FORMS FOR CONCRETE DECKS SHALL BE CONSTRUCTED USING EITHER REMOVABLE FORMS OR PERMANENT FORMS. PERMANENT FORMS MAY BE EITHER REMAIN-IN-PLACE STEEL OR PRECAST, PRESTRESSED CONCRETE PANELS. IN EITHER CASE, FORMS SHALL BE ATTACHED BY MEANS OTHER THAN WELDING TO MAIN STRUCTURAL MEMBERS OR REINFORCING STEEL. TEMPORARY ERECTION DIAPHRAGMS MUST BE USED AT THE ENDS OF PRECAST CONCRETE GIRDERS WHERE END DIAPHRAGMS, SUPPORT DIAPHRAGMS, OR ABUTMENT BACKWALLS ARE TO BE POURED CONCURRENTLY WITH THE DECK AND SHALL BE PROVIDED ELSEWHERE IN ACCORDANCE WITH THE SPECIFICATIONS TO PREVENT GIRDER ROTATION. SEE STANDARD DRAWINGS STD-4-1 THRU STD-4-4, STD-14-3, AND SECTION 604.05 OF THE STANDARD SPECIFICATIONS.

SHOP DRAWINGS: SHALL BE SUBMITTED ACCORDING TO TDOT STANDARD SPECIFICATIONS SECTION 105. SHOP DRAWINGS SHALL BE SUBMITTED TO THE DIVISION OF STRUCTURES OFFICE, OFFICE OF BRIDGE INSPECTION AND REPAIR.

CONCRETE SEALER: CONCRETE SEALER SHALL BE APPLIED TO SUBSTRUCTURES COINCIDING WITH EXPANSION JOINT LOCATIONS BEFORE PLACEMENT OF BEARING DEVICES AND APPLYING TEXTURE COATING. CONCRETE SEALER SHALL BE APPLIED TO THE TOP AND VERTICAL SURFACES OF THE THE BENT OR PIER CAP. CONCRETE SURFACES SHALL BE CLEAN AND DRY BEFORE APPLYING THE SEALER. THE THICKNESS SHALL BE AS RECOMMENDED BY THE SEALANT MANUFACTURER. ACCEPTABLE CONCRETE SEALERS ARE INCLUDED IN THE QUALIFIED PRODUCTS LIST FOR NON-PENETRATING CONCRETE SEALS MAINTAINED BY THE DIVISION OF MATERAILS AND TESTS. THE SEALER SHALL BE CLEAR OR SIMILAR TO THE COLOR OF THE EXISTING CONCRETE SURFACES TO BE SEALED. THE COST OF THE SEALER, COMPLETE AND IN PLACE, SHALL BE INCLUDED IN THE UNIT PRICE OF NON-PENETRATING CONCRETE SEAL, ITEM NO. 604-10.17.

BRIGDE RAILING END POST: ENDPOSTS AS SHOWN ON STD-11-1 SHALL BE LOCATED ON THE BRIDGE SUPERSTRUCTURE AND MODIFIED TO BE INTEGRAL WITH SLAB. BARS A570E PER STD-11-1 SHALL BE BENT OR CUT TO MAINTAIN REQUIRED CLEARANCES AND SPLICED WITH BARS B570E FOR THE SPACING SHOWN FOR THE END POST.

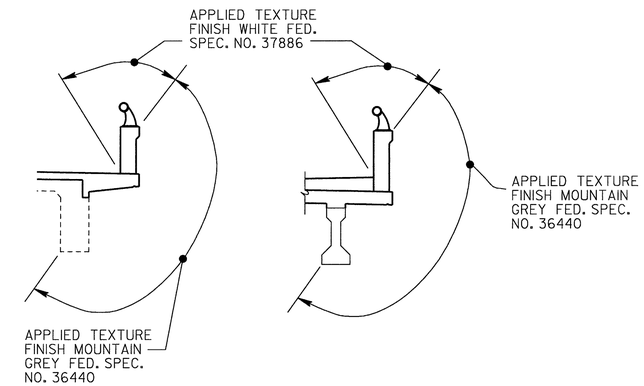

APPLIED TEXTURE FINISH SKETCHES

IN ADDITION TO THE SURFACES SHOWN IN THE APPLIED TEXTURE FINISH SKETCH, ALL EXPOSED SURFACES OF THE PIERS, BENTS, WINGWALLS, ABUTMENT BEAMS AND EXTERIOR PORTIONS OF THE ENDWALL SHALL RECEIVE AN APPLIED TEXTURE FINISH, MOUNTAIN GREY, FED. SPEC. NO. 36440.
COST OF CLEANING, FURNISHING AND APPLYING TEXTURE COATING INCLUDING LABOR AND NECESSARY MATERIALS SHALL BE INCLUDED IN ITEM NO. 604-04.01 AND 604-04.02, APPLIED TEXTURE FINISH (NEW STRUCTURES), S.Y. AND APPLIED TEXTURE FINISH (EXISTING STRUCTURES), S.Y.
THE CONTRACTOR SHALL USE CONTAINMENT SCREENS OR OTHER MEASURES AS NECESSARY TO PREVENT ANY TEXTURE COATING FROM ENTERING THE ENVIRONMENT.
CONTAINMENT MEASURES SHALL BE APPROVED BY THE ENGINEER AND COST INCLUDED IN BID ITEMS.
THE EXISTING SURFACES THAT ARE TO RECEIVE A TEXTURE FINISH SHALL BE FREE OF ALL FLAKING TEXTURE COATING, RUST , DIRT, OIL, AND OTHER FOREIGN SUBSTANCES PRIOR TO THE APPLICATION OF THE TEXTURE FINISH. THE SURFACE SHALL BE CLEANED TO THE COMPLETE SATISFACTION OF THE ENGINEER. COST TO BE INCLUDED IN BID ITEMS.
THE WASH WATER IS TO BE FILTERED AND PAINT CHIPS AND DEBRIS COLLECTED PRIOR TO RELEASE OF THE WATER.
A LIST OF APPROVED TEXTURE COATINGS MAY BE OBTAINED FROM THE TDOT DIVISION OF MATERIALS AND TESTS.
NO TEXTURE FINISH SHALL BE APPLIED PRIOR TO COMPLETION OF PAVING AND HAULING OPERATIONS AT BRIDGE SITE.

SPECIAL NOTE FOR DEMOLITION

OUR EXISTING BRIDGE DRAWINGS OR INSPECTION REPORTS INDICATE THIS BRIDGE WAS ORIGINALLY CONSTRUCTED WITH TRANSITE (ASBESTOS AND CEMENT) DRAINS AND/OR PIPES. TO MINIMIZE THE AMOUNT OF HAZARDOUS MATERIAL WASTE, THE DRAINS AND/OR PIPE SHALL BE REMOVED PRIOR TO DEMOLITION OF THE STRUCTURE. THE CONTRACTOR IS REQUIRED TO TAKE ALL MANDATORY SAFEGUARDS PRESCRIBED BY STATE AND FEDERAL LAW FOR BOTH WORKER PROTECTION AND HAZARDOUS MATERIAL DISPOSAL.

NOTE: ALL DUST, WASH, AND PAINT SHALL BE CONTAINED AND NOT ALLOWED TO ENTER THE STREAM.

NOTE: ALL CONCRETE OR DEBRIS ENTERING THE STREAM IS TO BE LIFTED OUT WITHOUT DISTURBANCE OF STREAM BOTTOM.

NOTE: THIS STREAM IS ON THE 303(d) LIST FOR E. COLI AND HAS BEEN ISSUED A WATER CONTACT ADVISORY FROM TDEC.

UNOFFICIAL SET

NOT FOR BIDDING

STATE OF TENNESSEE
DEPARTMENT OF TRANSPORTATION
BUREAU OF HIGHWAYS

BRIDGE GENERAL NOTES
STATE ROUTE 2
OVER
LITTLE DUCK RIVER
BRIDGE NO. 16-SR002-13.68
COFFEE COUNTY
2013

DESIGNED BY	WAP	DATE	7-12
DRAWN BY	MLP	DATE	7-12
SUPERVISED BY	WAP	DATE	7-12
CHECKED BY	JCP	DATE	8-12

BR-114-62

TENNESSEE D.O.T.
DESIGN DIVISION
FILE NO.

TYPE	YEAR	PROJECT NO.	SHEET NO.
CONST.	2013	16003-4241-04	2B

ESTIMATED ROADWAY QUANTITIES

	ITEM NO.	DESCRIPTION	UNIT	QUANTITY
②	209-05	SEDIMENT REMOVAL	C.Y	24
②①	209-08.02	TEMPORARY SILT FENCE (WITH BACKING)	LF	640
	209-09.04	SEDIMENT FILTER BAG (15'X10')	EA.	1
	303-01	MINERAL AGGREGATE, TYPE A BASE, GRADING D	TON	40
	307-01.08	ASPHALT CONCRETE MIX (PG64-22) (BPMB-HM) GRADING B-M2	TON	50
	402-01	BITUMINOUS MATERIAL FOR PRIME COAT (PC)	TON	1
	402-02	AGGREGATE FOR COVER MATERIAL (PC)	TON	2
	403-01	BITUMINOUS MATERIAL FOR TACK COAT (TC)	TON	1
	411-01.10	ASPHALT CONCRETE MIX (PG64-22) GRADING D	TON	380
	415-01.02	COLD PLANING OF BITUMINOUS PAVEMENT	SY	6300
	701-01.01	CONCRETE SIDEWALK (4")	S.F.	400
	702-03	CONCRETE COMBINED CURB AND GUTTER	C.Y.	5
	705-01.01	GUARDRAIL AT END OF BRIDGE	LF	206
	705-04.07	TAN ENERGY ABSORBING TERM (NCHRP 350, TL3)	EA.	8
③	705-04.50	PORTABLE BARRIER RAIL DELINEATOR	EA.	76
	705-08.51	PORTABLE IMPACT ATTENUATOR NCHRP350 TL-3	EA.	4
	706-01	GUARDRAIL REMOVAL	LF	320
	712-01	TRAFFIC CONTROL	LS	1
	712-02.02	INTERCONNECTED PORTABLE BARRIER RAIL	LF	480
	712-02.47	BRIDGE MOUNTED INTERCONNECTED PORTABLE BARRIER RAIL	LF	640
	712-04.01	FLEXIBLE DRUMS (CHANNELIZING)	EA.	42
	712-05.01	WARNING LIGHTS (TYPE A)	EA.	2
	712-06	SIGNS (CONSTRUCTION)	SF	318
	712-08.03	CHANGEABLE MESSAGE SIGN	EA.	2
	712-09.01	REMOVABLE PAVEMENT MARKING LINE	LF	1654
	716-05.01	PAINTED PAVEMENT MARKING (4 IN LINE)	LM	1
	716-13.06	SPRAY THERMO PAVEMENT MARKING (40 MIL) (4 IN LINE)	LM	.5
	717-01	MOBILIZATION	LS	1

FOOTNOTES

① INCLUDES THE COST OF ALL LABOR AND MATERAILS FOR FURNISHING AND INSTALLING THE TEMPORARY FILTER BARRIER WHERE LOCATED BY THE ENGINEER AND REMOVAL UPON PROJECT COMPLETION. SEE STD. DWG. EC-STR-3C. THE ENGINEER MAY INCREASE OR DECREASE OR ELIMINATE THE QUANTITY FOR THIS ITEM.

② ITEM MAY BE INCREASED OR DECREASED AS DIRECTED BY THE ENGINEER.

③ THIS ITEM SHALL BE A PORTABLE ENERGY ABSORBING TERMINAL MEETING THE REQUIREMENTS OF NCHRP 350 FOR TEST LEVEL 3. EXAMPLES WOULD BE A QUAD-GUARD, A REACT 350 OR A TRACC. THE PAY ITEM WILL INCLUDE FURNISHING AND INSTALLING ALL COMPONENTS AS SHOWN ON THE MANUFACTURER'S DRAWING.

MISCELLANEOUS NOTES

1. NOTHING IN THE GENERAL NOTES OR SPECIAL PROVISIONS SHALL RELIEVE THE CONTRACTOR FROM HIS RESPONSIBILITIES TOWARD THE SAFETY AND CONVENIENCE OF THE GENERAL PUBLIC AND THE RESIDENTS ALONG THE PROPOSED CONSTRUCTION AREA.
2. TRAFFIC CONTROL PLAN - SEE SHEET 2D, SHEET 2E AND STD. DWG. NOS. T-WZ-32, T-WZ-34, AND T-WZ-35.
3. THE CONTRACTOR SHALL BE RESPONSIBLE FOR ANY DAMAGE OR LOSS OF EXISTING SIGNS DURING CONSTRUCTION. EXISTING SIGNS SHALL BE REMOVED AND REPLACED AS NECESSARY.

GUARDRAIL NOTES

1. THE CONTRACTOR SHALL NOT REMOVE REWORK SHOULDERS OR FLATTEN SLOPES UNTIL THE APPROPRIATE WARNING DEVICES ARE INSTALLED.
2. THE PROPOSED GUARDRAIL, INCLUDING ANY ANCHOR SYSTEM, SHALL BE INSTALLED QUICKLY TO MINIMIZE TRAFFIC EXPOSURE TO ANY HAZARD. NO PAYMENT WILL BE MADE FOR A SECTION OF PROPOSED GUARDRAIL, INCLUDING ANCHORS, UNTIL IT IS COMPLETE IN PLACE.
3. IF ANY APPROACH END OF A SECTION OF GUARDRAIL OR BRIDGE RAIL MUST TEMPORARILY BE LEFT INCOMPLETE AND EXPOSED TO TRAFFIC, THE CONTRACTOR SHALL USE TWO (2) TEMPORARY BARRICADES OR DRUMS WITH TYPE A LIGHTS AND ROUNDED END ELEMENTS AS MINIMUM MEASURES TO PROTECT TRAFFIC FROM THE HAZARD OF AN EXPOSED END. ALL COST OF FURNISHING AND INSTALLING A TEMPORARY ROUNDED END ELEMENT SHALL BE INCLUDED IN THE COST OF THE PROPOSED GUARDRAIL.
4. GUARDRAIL IS TO BE COMPLETE IN PLACE BEFORE THE MAINLINE ROADWAY IS OPENED TO TRAFFIC.

UTILITY NOTES

1. THE LOCATIONS OF UTILITIES SHOWN WITHIN THESE PLANS ARE APPROXIMATE ONLY. EXACT LOCATIONS SHALL BE DETERMINED IN THE FIELD BY CONTACTING THE UTILITY COMPANIES INVOLVED. NOTIFICATION BY CALLING THE TENNESSEE ONE CALL SYSTEM, INC., AT 1-800-351-1111 AS REQUIRED BY TCA 65-31-106 WILL BE REQUIRED.
2. UNLESS OTHERWISE NOTED, ALL UTILITY ADJUSTMENTS WILL BE PERFORMED BY THE UTILITY OR IT'S REPRESENTATIVE. THE CONTRACTOR AND UTILITY OWNERS WILL BE REQUIRED TO COOPERATE WITH EACH OTHER IN ORDER TO EXPEDITE THE WORK REQUIRED BY THIS CONTRACT. ON CONTRACTS WHERE CONSTRUCTION STAKES, LINES, AND GRADES ARE CONTRACT ITEMS, THE CONTRACTOR WILL BE REQUIRED TO PROVIDE RIGHT-OF-WAY OR SLOPE STAKES, DITCH OR STREAM BED GRADES, OR OTHER ESSENTIAL SURVEY STAKING TO PREVENT CONFLICTS WITH THE HIGHWAY CONSTRUCTION. FREQUENTLY, THIS WILL BE REQUIRED AS THE FIRST ITEM OF WORK AND AT ANY LOCATION ON THE PROJECT DIRECTED BY THE ENGINEER.
3. THE CONTRACTOR WILL PROVIDE ALL NECESSARY PROTECTIVE MEASURES TO SAFEGUARD EXISITING UTILITIES FROM DAMAGE DURING CONSTRUCTION OF THIS PROJECT. IN THE EVENT THAT SPECIAL EQUIPMENT IS REQUIRED TO WORK OVER AND AROUND THE UTILITIES, THE CONTRACTOR WILL BE REQUIRED TO FURNISH SUCH EQUIPMENT. THE COST OF PROTECTING UTILITIES FROM DAMAGE AND FURNISHING SPECIAL EQUIPMENT WILL BE INCLUDED IN THE BID PRICE FOR OTHER ITEMS OF CONSTRUCTION.
4. PRIOR TO SUBMITTING HIS BID, THE CONTRACTOR WILL BE SOLELY RESPONSIBLE FOR CONTACTING OWNERS OF ALL AFFECTED UTILITIES IN ORDER TO DETERMINE THE EXTENT TO WHICH RELOCATIONS AND/OR ADJUSTMENTS WILL HAVE UPON THE SCHEDULE OF WORK FOR THE PROJECT. WHILE SOME WORK MAY BE REQUIRED "AROUND" UTILITY FACILITIES THAT WILL REMAIN IN PLACE. OTHER UTILITY FACILITIES MAY NEED TO BE ADJUSTED CONCURRENTLY WITH THE CONTRACTOR'S OPERATIONS. ADVANCE CLEAR CUTTING MAY BE REQUIRED BY THE ENGINEER AT ANY LOCATION WHERE CLEARING IS CALLED FOR IN THE SPECIFICATIONS AND CLEAR CUTTING IS NECESSARY FOR A UTILITY RELOCATION. ANY ADDITIONAL COST WILL BE INCLUDED IN THE UNIT PRICE BID FOR THE CLEARING ITEM SPECIFIED IN THE PLANS.
5. THE CONTRACTOR SHALL NOTIFY EACH INDIVIDUAL UTILITY OWNER OF HIS PLAN OF OPERATION IN THE AREA OF THE UTILITIES. PRIOR TO COMMENCING WORK, THE CONTRACTOR SHALL CONTACT THE UTILITY OWNERS AND REQUEST THEM TO PROPERLY LOCATE THEIR RESPECTIVE UTILITY ON THE GROUND. THIS NOTIFICATION SHALL BE GIVEN AT LEAST THREE (3) BUSINESS DAYS PRIOR TO COMMENCEMENT OF OPERATIONS AROUND THE UTILITY IN ACCORDANCE WITH TCA 65-31-106.

UNOFFICIAL SET

NOT FOR BIDDING

GRADING NOTE

1. ANY AREA THAT IS DISTURBED OUTSIDE LIMITS OF CONSTRUCTION DURING THE LIFE OF THIS PROJECT SHALL BE REPAIRED BY THE CONTRACTOR AT HIS EXPENSE.

WINFORD A. PENNINGTON
REGISTERED ENGINEER
AGRICULTURE
NO. 13774
STATE OF TENNESSEE
05-01-13

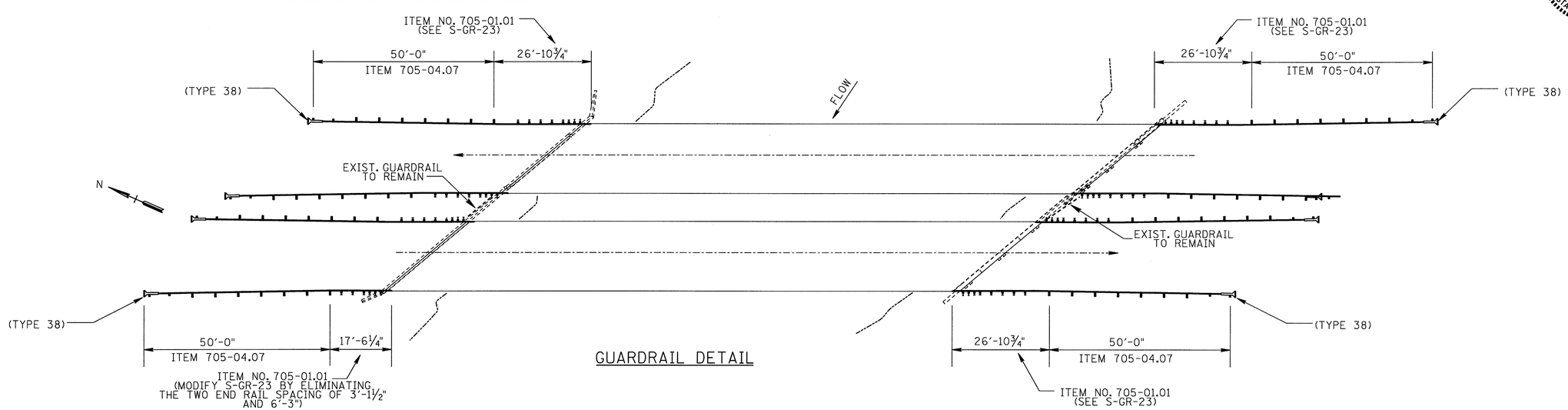

GUARDRAIL DETAIL

STATE OF TENNESSEE
DEPARTMENT OF TRANSPORTATION

ESTIMATED ROADWAY QUANTITIES

BR. NO. 16-SR002-13.68

TENNESSEE D.O.T.	DESIGN DIVISION	FILE NO.

TYPE	YEAR	PROJECT NO.	SHEET NO.
CONST.	2013	16003-4241-04	2C

PAVEMENT EDGE DROP-OFF TRAFFIC CONTROL NOTES

A. DIFFERENCES IN ELEVATION BETWEEN ADJACENT TRAFFIC LANES OR TRAFFIC LANE AND SHOULDER WHERE THE TRAFFIC LANE IS BEING USED BY TRAFFIC, CAUSED BY BASE, PAVING OR RESURFACING:

1. DIFFERENCES IN ELEVATION BETWEEN ADJACENT ROADWAY ELEMENTS GREATER THAN 0.75 INCH AND NOT EXCEEDING 2 INCHES:

   a. WARNING SIGNS, UNEVEN PAVEMENT (W8-11) AND/OR SHOULDER DROP-OFF (W8-9A), SHALL BE PLACED IN ADVANCE OF AND THROUGHOUT THE EXPOSED AREA. MAXIMUM SPACING BETWEEN SIGNS SHALL BE 2,000 FEET WITH A MINIMUM OF 2 SIGNS PER EXPOSED AREA. WHERE UNEVEN PAVEMENT IS ENCOUNTERED, SIGNS SHALL BE PLACED ON EACH SIDE OF THE ROADWAY.

   b. DIFFERENCES IN ELEVATION BETWEEN ADJACENT TRAFFIC LANES BEING UTILIZED BY TRAFFIC CAUSED BY ADDED PAVEMENT SHALL BE ELIMINATED WITHIN THREE WORKDAYS.

   c. DIFFERENCES IN ELEVATION BETWEEN ADJACENT TRAFFIC LANES BEING UTILIZED BY TRAFFIC CAUSED BY COLD PLANING SHALL BE ELIMINATED WITHIN THREE WORKDAYS.

   d. WHEN THE DIFFERENCE IN ELEVATION IS BETWEEN THE TRAFFIC LANE BEING UTILIZED BY TRAFFIC AND SHOULDER THE DIFFERENCE IN ELEVATION SHALL BE ELIMINATED WITHIN SEVEN WORKDAYS AFTER THE CONDITION IS CREATED.

2. DIFFERENCES IN ELEVATION BETWEEN ADJACENT ROADWAY ELEMENTS GREATER THAN 2 INCHES AND NOT EXCEEDING 6 INCHES. TRAFFIC IS NOT TO BE ALLOWED TO TRAVERSE THIS DIFFERENCE IN ELEVATION.

   a. SEPARATION SHALL BE ACCOMPLISHED BY DRUMS, BARRICADES OR OTHER APPROVED DEVICES IN ACCORDANCE WITH THE FOLLOWING:

      (1) WHERE POSTED SPEEDS ARE 50 MPH OR GREATER, SPACING OF THE PROTECTIVE DEVICES SHALL NOT EXCEED 100 FEET.

      (2) WHERE POSTED SPEEDS ARE LESS THAN 50 MPH, THE MAXIMUM SPACING OF THE PROTECTIVE DEVICES IN FEET SHALL NOT EXCEED TWICE THE POSTED SPEED IN MILES PER HOUR OR 50 FEET, WHICHEVER SPACING IS GREATER.

   b. IF THE DIFFERENCE IN ELEVATION IS ELIMINATED OR DECREASED TO 2 INCHES OR LESS BY THE END OF EACH WORKDAY, CONES MAY BE USED DURING DAYLIGHT HOURS IN LIEU OF DRUMS, BARRICADES OR OTHER APPROVED PROTECTIVE DEVICES MENTIONED IN PARAGRAPH A, PROVIDED WARNING SIGNS ARE ERECTED. WARNING SIGNS (UNEVEN PAVEMENT AND/OR LOW SHOULDER) SHALL BE PLACED IN ADVANCE OF AND THROUGHOUT THE EXPOSED AREA. MAXIMUM SPACING BETWEEN SIGNS SHALL BE 2,000 FEET WITH A MINIMUM OF 2 SIGNS PER EXPOSED AREA. WHERE UNEVEN PAVEMENT IS ENCOUNTERED, SIGNS SHALL BE PLACED ON EACH SIDE OF THE ROADWAY.

   c. WHEN THE DIFFERENCE IN ELEVATION IS BETWEEN THE THROUGH TRAFFIC LANE AND THE SHOULDER AND THE ELEVATION DIFFERENCE IS LESS THAN 3.5 INCHES, THE CONTRACTOR MAY USE WARNING SIGNS AND/OR PROTECTIVE DEVICES AS APPLICABLE AND APPROVED BY THE ENGINEER. SEE PARAGRAPH A REGARDING USE OF DRUMS, BARRICADES OR OTHER APPROVED PROTECTIVE DEVICES. WARNING SIGNS (UNEVEN PAVEMENT AND/OR LOW SHOULDER) WILL BE PLACED IN ADVANCE OF AND THROUGHOUT THE EXPOSED AREA. MAXIMUM SPACING BETWEEN SIGNS SHALL BE 2,000 FEET WITH A MINIMUM OF 2 SIGNS PER EXPOSED AREA. WHERE UNEVEN PAVEMENT IS ENCOUNTERED, SIGNS SHALL BE PLACED ON EACH SIDE OF THE ROADWAY. IN THESE SITUATIONS, THE CONTRACTOR SHALL LIMIT HIS OPERATIONS TO ONE WORK ZONE NOT EXCEEDING 2 MILES IN LENGTH UNLESS OTHERWISE NOTED ON THE PLANS OR APPROVED BY THE ENGINEER. ONCE THE CONTRACTOR BEGINS WORK IN A WORK ZONE, A CONTINUOUS OPERATION SHALL BE MAINTAINED UNTIL THE DIFFERENCE IN ELEVATION IS ELIMINATED. SIMULTANEOUS WORK ON SEPARATE ROADWAYS OF DIVIDED HIGHWAYS WILL BE CONSIDERED INDEPENDENTLY IN REGARD TO RESTRICTION OF WORK ZONE ACTIVITY.

B. THE DIFFERENCE IN ELEVATION IS FARTHER THAN 8 FEET FROM THE NEAREST TRAFFIC LANE BUT NOT MORE THAN 30 FEET FROM THE NEAREST TRAFFIC LANE: SEPARATION SHALL BE ACCOMPLISHED BY DRUMS, BARRICADES OR OTHER APPROVED DEVICES IN ACCORDANCE WITH THE FOLLOWING:

1. WHERE POSTED SPEEDS ARE 50 MPH OR GREATER, SPACING OF THE PROTECTIVE DEVICES SHALL NOT EXCEED 100 FEET.

2. WHERE POSTED SPEEDS ARE LESS THAN 50 MPH, THE MAXIMUM SPACING OF THE PROTECTIVE DEVICES IN FEET SHALL NOT EXCEED TWICE THE POSTED SPEED IN MILES PER HOUR OR 50 FEET, WHICHEVER SPACING IS GREATER. THE CONTRACTOR SHALL SCHEDULE THE WORK SO AS TO MINIMIZE THE TIME TRAFFIC IS EXPOSED TO AN ELEVATION DIFFERENCE. ONCE THE CONTRACTOR BEGINS AN ACTIVITY THAT CREATES AN ELEVATION DIFFERENCE, THE ACTIVITY SHALL BE PURSUED AS A CONTINUOUS OPERATION UNTIL THE ELEVATION DIFFERENCE IS ELIMINATED.

PAVING RESURFACING NOTE

1. THE CONTRACTOR SHALL BE REQUIRED TO COLD PLANE AND PAVE IN THE DIRECTION OF TRAFFIC.

2. IN ALL CASES FOR THE LENGTH OF THE PAVEMENT TRANSITION THE THICKNESS AND WIDTH OF THE RESURFACING AND ANY ADDTIONAL PAVEMENT MATERIALS SHALL BE AS DIRECTED BY THE TDOT ENGINEER.

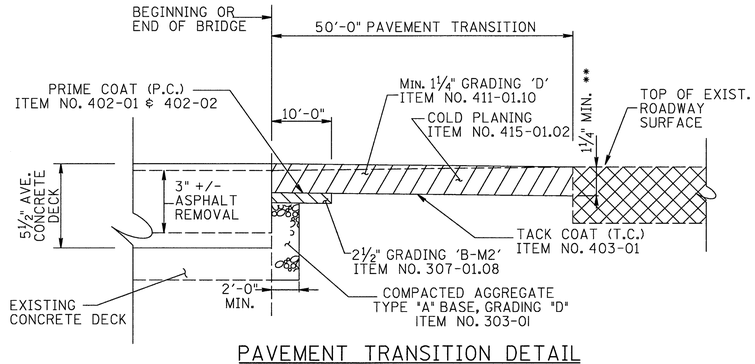

PAVEMENT TRANSITION DETAIL

NOTES:

PAVEMENT AT EACH END OF BRIDGE TO BE REPAIRED AFTER COMPLETION OF BRIDGE REPAIRS TO PROVIDE A SMOOTH RIDING SURFACE FROM EXISTING ASPHALT TO NEW CONCRETE OVERLAY.

** DENOTES: 1" VERTICAL SAWCUT TO ENSURE SMOOTH EDGE AT END OF ASPHALT TRANSITION. SAWCUT TO BE INCLUDED IN BID ITEMS.

SEE SECTION 617 AND 906.04 OF THE TENNESSEE STANDARD SPECIFICATIONS FOR ROAD AND BRIDGE CONSTRUCTION.

REMOVAL OF EXISTING ASPHALT FROM THE BRIDGE FOR FULL WIDTH AND LENGTH TO BE PAID UNDER ITEM NO. 604-10.14.

REMOVAL OF 50' EXISTING ASPHALT TRANSITION FOR FULL WIDTH OF APPROACHES (TWO 12' LANES) TO BE PAID FOR UNDER ITEM NO. 415-01.02.

ASPHALT TO BE SLOPED OR FEATHERED AS NECESSARY TO OBTAIN DESIRED SURFACE SLOPE.

PAVEMENT MARKING NOTES

1. TEMPORARY PAVEMENT LINE MARKINGS ON INTERMEDIATE LAYERS OF PAVEMENT SHALL BE REFLECTIVE TAPE OR REFLECTORIZED PAINT INSTALLED TO PERMANENT STANDARDS AT THE END OF EACH DAY'S WORK. SHORT, UNMARKED SECTIONS WILL NOT BE ALLOWED. THESE MARKINGS WILL BE MEASURED AND PAID FOR UNDER ITEM NO. 712-09.01 REMOVABLE PAVEMENT MARKING LINE PER LINEAR FOOT.

2. PERMANENT PAVEMENT LINE MARKING SHALL BE 4" SPRAY THERMOPLASTIC (40 MIL) INSTALLED TO PERMANENT STANDARDS AT THE END OF EACH DAY'S WORK. SHORT UNMARKED SECTIONS SHALL NOT BE ALLOWED. PAVEMENT MARKINGS WILL BE MEASURED AND PAID FOR UNDER ITEM NO. 716-13.06 , SPRAY THERMO PVMT MRKNG (40 MIL) (4 IN LINE), L.M. THE CONTRACTOR SHALL HAVE THE OPTION OF USING REFLECTORIZED PAINT INSTALLED TO PERMANENT STANDARDS AT THE END OF EACH DAY'S WORK AND THEN INSTALLING THE PERMANENT MARKINGS AFTER THE PAVING OPERATION IS COMPLETED. THE TEMPORARY MARKINGS FOR THE FINAL SURFACE WILL NOT BE MEASURED AND PAID FOR DIRECTLY, BUT THE COSTS ARE TO BE INCLUDED IN THE PRICE BID FOR THE PERMANENT MARKINGS.

3. BEFORE OPENING THE LANE SHIFT TO TRAFFIC, THE TRANSITIONAL MARKINGS ON THE EXISTING ROADWAY MUST BE IN PLACE. THESE MARKINGS WILL BE MEASURED AND PAID FOR UNDER ITEM NO. 712-09.01 REMOVABLE PAVEMENT MARKING LINE, L.F. ALL EXISTING MARKINGS SHALL BE OBLITERATED AND ALL EXISTING RAISED PAVEMENT MARKERS SHALL BE REMOVED TO ELIMINATE CONFLICTING MARKINGS. REMOVAL OF THE EXISTING MARKINGS AND RAISED PAVEMENT MARKERS WILL NOT BE MEASURED AND PAID FOR DIRECTLY, BUT THE COST WILL BE INCLUDED IN ITEM NO. 712-01 TRAFFIC CONTROL, LUMP SUM.

UNOFFICIAL SET

NOT FOR BIDDING

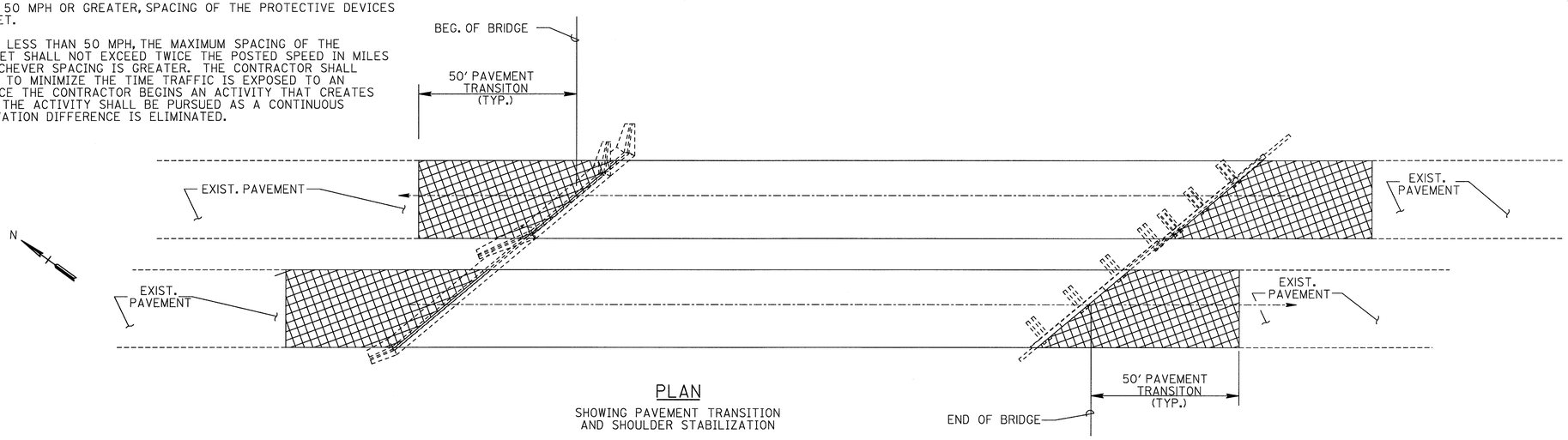

PLAN

SHOWING PAVEMENT TRANSITION AND SHOULDER STABILIZATION

STATE OF TENNESSEE
DEPARTMENT OF TRANSPORTATION

ROADWAY NOTES AND DETAILS

BR. NO. 16-SR002-13.68

TENNESSEE D.O.T.	
DESIGN DIVISION	
FILE NO.	

TYPE	YEAR	PROJECT NO.	SHEET NO.
CONST.	2013	16003-4241-04	2D

TRAFFIC CONTROL LEGEND

- FLEXIBLE DRUMS (CHANNELIZING) SPACED @ 30' +/- IN TAPERS AND 60'+/- IN TANGENTS
- PORTABLE BARRIER RAIL WITH RAIL DELINEATORS @ 20 +/-
- SIGN
- SSWL SINGLE SOLID WHITE LINE
- ATTENUATOR
- DENOTES : WORK ZONE

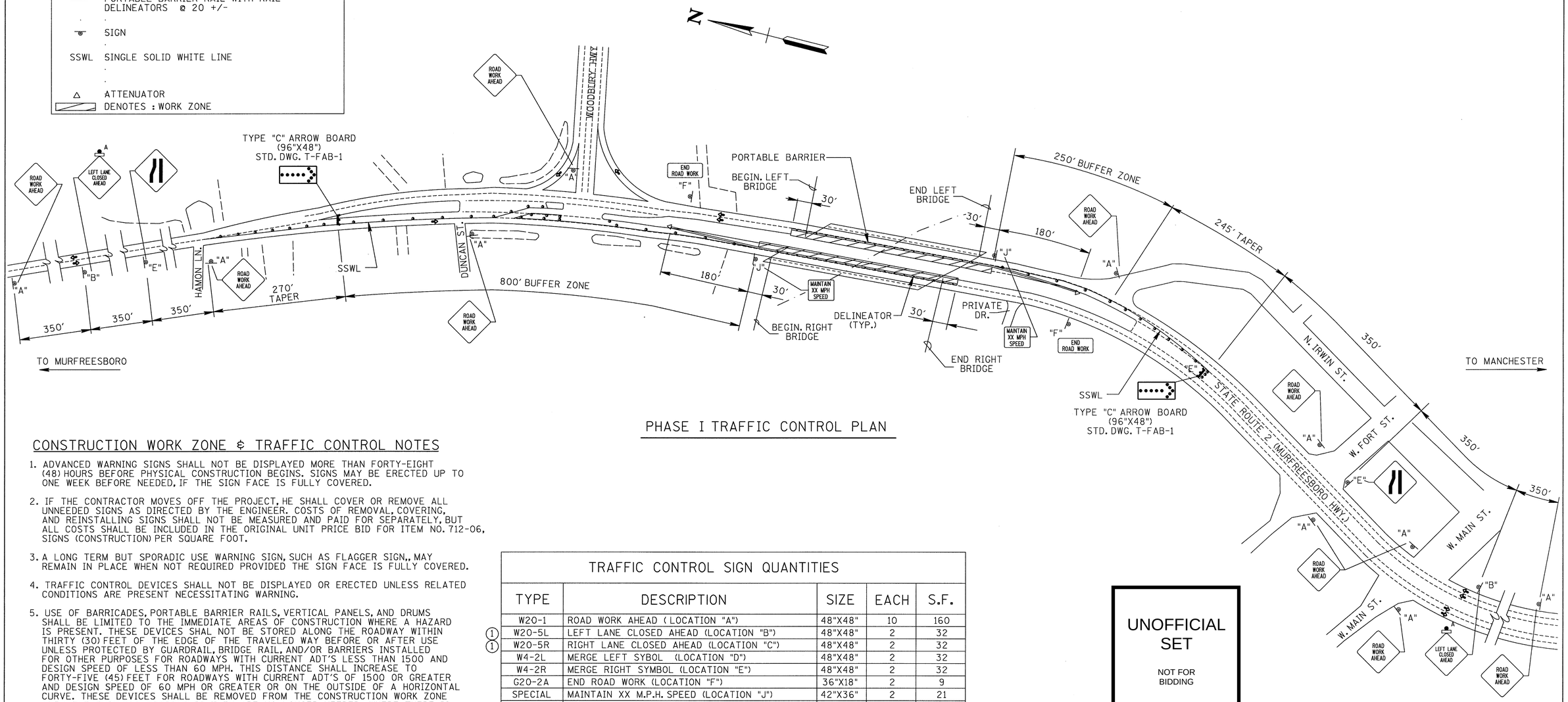

PHASE I TRAFFIC CONTROL PLAN

CONSTRUCTION WORK ZONE & TRAFFIC CONTROL NOTES

1. ADVANCED WARNING SIGNS SHALL NOT BE DISPLAYED MORE THAN FORTY-EIGHT (48) HOURS BEFORE PHYSICAL CONSTRUCTION BEGINS. SIGNS MAY BE ERECTED UP TO ONE WEEK BEFORE NEEDED, IF THE SIGN FACE IS FULLY COVERED.

2. IF THE CONTRACTOR MOVES OFF THE PROJECT, HE SHALL COVER OR REMOVE ALL UNNEEDED SIGNS AS DIRECTED BY THE ENGINEER. COSTS OF REMOVAL, COVERING, AND REINSTALLING SIGNS SHALL NOT BE MEASURED AND PAID FOR SEPARATELY, BUT ALL COSTS SHALL BE INCLUDED IN THE ORIGINAL UNIT PRICE BID FOR ITEM NO. 712-06, SIGNS (CONSTRUCTION) PER SQUARE FOOT.

3. A LONG TERM BUT SPORADIC USE WARNING SIGN, SUCH AS FLAGGER SIGN,, MAY REMAIN IN PLACE WHEN NOT REQUIRED PROVIDED THE SIGN FACE IS FULLY COVERED.

4. TRAFFIC CONTROL DEVICES SHALL NOT BE DISPLAYED OR ERECTED UNLESS RELATED CONDITIONS ARE PRESENT NECESSITATING WARNING.

5. USE OF BARRICADES, PORTABLE BARRIER RAILS, VERTICAL PANELS, AND DRUMS SHALL BE LIMITED TO THE IMMEDIATE AREAS OF CONSTRUCTION WHERE A HAZARD IS PRESENT. THESE DEVICES SHAL NOT BE STORED ALONG THE ROADWAY WITHIN THIRTY (30) FEET OF THE EDGE OF THE TRAVELED WAY BEFORE OR AFTER USE UNLESS PROTECTED BY GUARDRAIL, BRIDGE RAIL, AND/OR BARRIERS INSTALLED FOR OTHER PURPOSES FOR ROADWAYS WITH CURRENT ADT'S LESS THAN 1500 AND DESIGN SPEED OF LESS THAN 60 MPH. THIS DISTANCE SHALL INCREASE TO FORTY-FIVE (45) FEET FOR ROADWAYS WITH CURRENT ADT'S OF 1500 OR GREATER AND DESIGN SPEED OF 60 MPH OR GREATER OR ON THE OUTSIDE OF A HORIZONTAL CURVE. THESE DEVICES SHALL BE REMOVED FROM THE CONSTRUCTION WORK ZONE WHEN THE ENGINEER DETERMINES THEY ARE NO LONGER NEEDED. WHERE THERE IS INSUFFICIENT RIGHT-OF-WAY TO PROVIDE FOR THIS REQUIRED SETBACK, THE CONTRACTOR SHALL DETERMINE THE ALTERNATE LOCATIONS AND REQUEST THE ENGINEER'S APPROVAL TO USE THEM.

6. THE CONTRACTOR SHALL NOT BE PERMITTED TO PARK ANY VEHICLES OR CONSTRUCTION EQUIPMENT DURING PERIODS OF INACTIVITY, WITHIN THIRTY (30) FEET OF THE EDGE OF PAVEMENT WHEN THE LANE IS OPEN TO TRAFFIC UNLESS PROTECTED BY GUARDRAIL, BRIDGE RAIL, AND/OR BARRIERS INSTALLED FOR OTHER PURPOSES FOR ROADWAYS WITH CURRENT ADT'S LESS THAN 1500 AND DESIGN SPEED OF LESS THAN 60 MPH. THIS DISTANCE SHALL BE INCREASED TO FORT-FIVE (45) FEET FOR ROADWAYS WITH CURRENT ADT'S OF 1500 OR GREATER AND DESIGN SPEED OF 60 MPH OR GREATER OR ON THE OUTSIDE OF A HORIZONTAL CURVE. PRIVATELY OWNED VEHICLES SHALL NOT BE ALLOWED TO PARK WITHIN THIRTY (30) FEET OF A OPEN TRAFFIC LANE AT ANY TIME UNLESS PROTECTED AS DESCRIBED ABOVE FOR ROADWAYS WITH CURRENT ADT'S LESS THAN 1500 AND DESIGN SPEED OF LESS THAN 60 MPH. THIS DISTANCE SHALL BE INCREASED TO FORTY-FIVE (45) FEET FOR ROADWAYS WITH CURRENT ADT'S OF 1500 OR GREATER AND DESIGN SPEED OF 60 MPH OR GREATER OR ON THE OUTSIDE OF A HORIZONTAL CURVE. WHERE THERE IS INSUFFICIENT RIGHT-OF-WAY TO PROVIDE FOR THIS REQUIRED SETBACK, THE CONTRACTOR SHAL DETERMINE THE ALTERNATE LOCATIONS AND REQUEST THE ENGINEER'S APPROVAL TO USE THEM.

7. ALL DETOUR AND CONSTRUCTION SIGNING SHALL BE IN STRICT ACCORDANCE WITH THE MANUAL ON UNIFORM TRAFFIC CONTROL DEVICES.

TRAFFIC CONTROL SIGN QUANTITIES

	TYPE	DESCRIPTION	SIZE	EACH	S.F.
	W20-1	ROAD WORK AHEAD (LOCATION "A")	48"X48"	10	160
1	W20-5L	LEFT LANE CLOSED AHEAD (LOCATION "B")	48"X48"	2	32
1	W20-5R	RIGHT LANE CLOSED AHEAD (LOCATION "C")	48"X48"	2	32
	W4-2L	MERGE LEFT SYBOL (LOCATION "D")	48"X48"	2	32
	W4-2R	MERGE RIGHT SYMBOL (LOCATION "E")	48"X48"	2	32
	G20-2A	END ROAD WORK (LOCATION "F")	36"X18"	2	9
	SPECIAL	MAINTAIN XX M.P.H. SPEED (LOCATION "J")	42"X36"	2	21
	TOTAL	ITEM NO. 712-06 SIGNS (CONSTRUCTION)			318

1 DENOTES SIGN WITH TYPE "A" WARNING LIGHTS"

UNOFFICIAL SET

NOT FOR BIDDING

STATE OF TENNESSEE
DEPARTMENT OF TRANSPORTATION

TRAFFIC CONTROL PLAN

PHASE I CONSTRUCTION
BR. NO. 16-SR002-13.68

TENNESSEE D.O.T.	
DESIGN DIVISION	
FILE NO.	

TYPE	YEAR	PROJECT NO.	SHEET NO.
CONST.	2013	16003-4241-04	2E

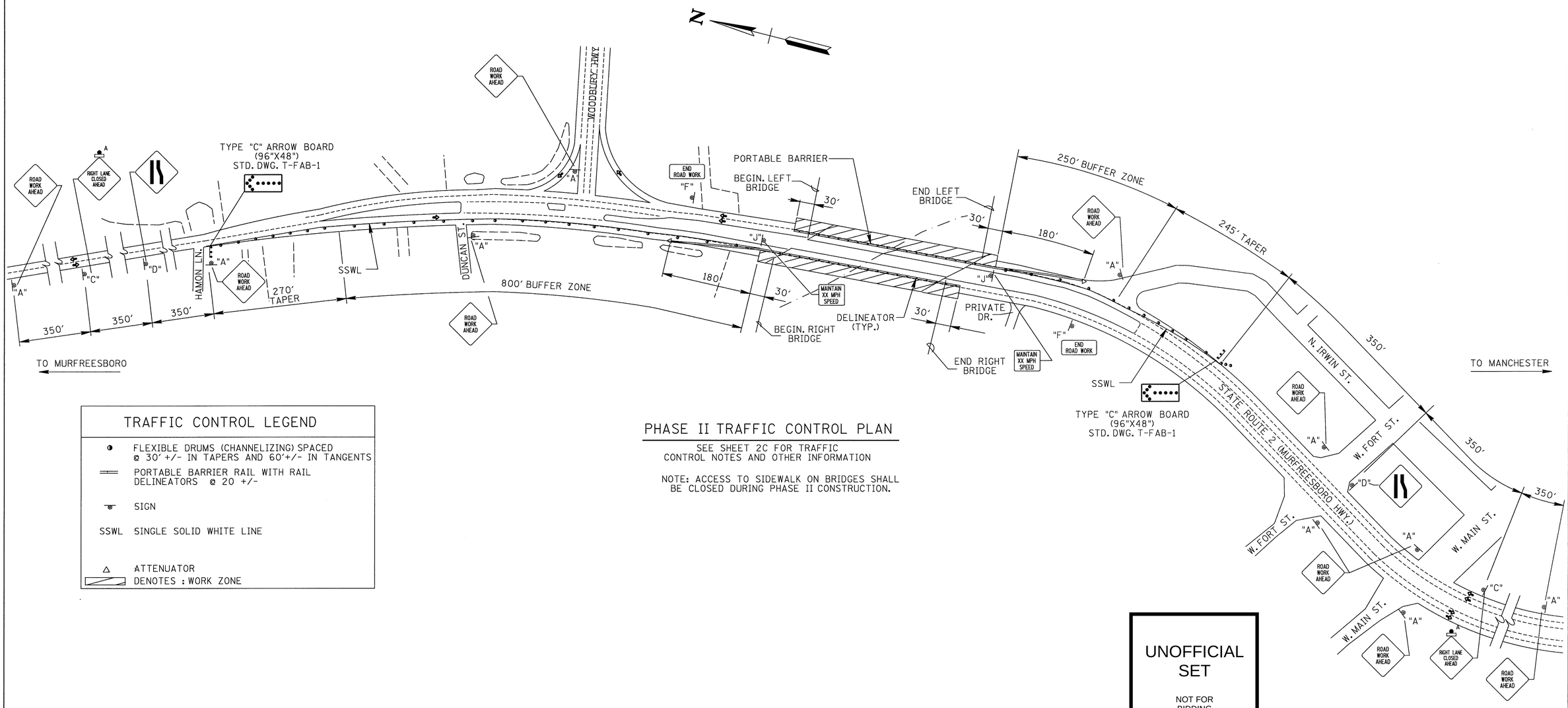

TRAFFIC CONTROL LEGEND

- FLEXIBLE DRUMS (CHANNELIZING) SPACED @ 30' +/- IN TAPERS AND 60'+/- IN TANGENTS
- PORTABLE BARRIER RAIL WITH RAIL DELINEATORS @ 20 +/-
- SIGN
- SSWL SINGLE SOLID WHITE LINE
- ATTENUATOR
- DENOTES : WORK ZONE

PHASE II TRAFFIC CONTROL PLAN

SEE SHEET 2C FOR TRAFFIC CONTROL NOTES AND OTHER INFORMATION

NOTE: ACCESS TO SIDEWALK ON BRIDGES SHALL BE CLOSED DURING PHASE II CONSTRUCTION.

UNOFFICIAL SET

NOT FOR BIDDING

WINFORD A. PETRONE
AGRICULTURE
NO. 13714
STATE OF TENNESSEE
05-01-13

STATE OF TENNESSEE
DEPARTMENT OF TRANSPORTATION

TRAFFIC CONTROL PLAN

PHASE II CONSTRUCTION
BR. NO. 16-SR002-13.68

TENNESSEE D.O.T.	DESIGN DIVISION	FILE NO.

TYPE	YEAR	PROJECT NO.	SHEET NO.
CONST.	2013	16003-4241-04	2F

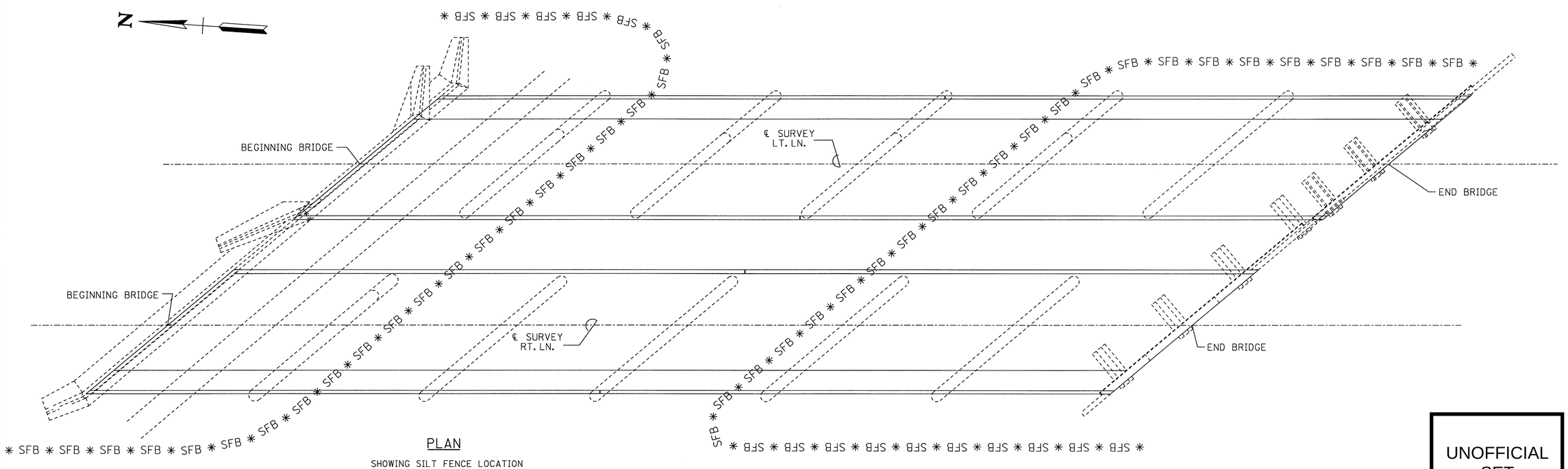

PLAN

SHOWING SILT FENCE LOCATION

NOTE: CONTRACTOR SHALL BE RESPONSIBLE FOR ANY DAMAGE TO EXISTING GUARDRAIL AND POST DURING EXCAVATION AND PAVING.

UNOFFICIAL SET

NOT FOR BIDDING

EROSION PREVENTION AND SEDIMENT CONTROL NOTES

1. CONTRACTOR SHALL USE EXTREME CARE AND TAKE ANY MEASURE NECESSARY TO INSURE THAT NO DEBRIS IS DROPPED INTO THE STREAM. THIS SHALL BE ACCOMPLISHED BY THE USE OF BASKETS, NETTING, WRAPPING, WORK PLATFORM, OR OTHER SIMILARLY EFFECTIVE MEANS. ANY DEBRIS WHICH IS ALLOWED TO DROP ON THE BANKS BELOW THE BRIDGE SHALL NOT BE ALLOWED TO ENTER THE STREAM AND SHALL BE REMOVED AND DISPOSED OF BY THE CONTRACTOR. COST OF REMOVING AND DISPOSING OF DEBRIS SHALL BE INCLUDED IN ITEMS BID ON.

2. ANY WORK WITHIN THE STREAM CHANNEL AREA (E.G. FOR PIER FOOTING, RIP-RAP PLACEMENT, MULTI-BARREL CULVERT/BRIDGE CONSTRUCTION, ETC.) SHALL BE SEPARATED FROM FLOWING WATER OR EXPECTED FLOW PATH AND PERFORMED DURING LOW FLOW CONDITIONS. ALL ITEMS USED WITHIN THE STREAM CHANNEL AREA FOR DIVERSION OF FLOW (OR EXPECTED FLOW), UNLESS SPECIFIED IN PLANS, SHALL NOT BE PAID FOR DIRECTLY BUT SHALL BE INCLUDED IN THE COST OF OTHER ITEMS. THIS NOTE EXCLUDES ANY ITEMS SPECIFIED IN THE PLANS FOR THE TEMPORARY DIVERSION CHANNELS, EC-STR-31 AND TEMPORARY DIVERSION CULVERTS, EC-STR-32 FOR SINGLE BARREL CULVERT CONSTRUCTION.

3. INSPECTION, REPAIR, AND MAINTENANCE OF EPSC MEASURES/STRUCTURES IS TO BE PERFORMED ON A REGULAR BASIS. SEDIMENT SHALL BE REMOVED FROM SEDIMENT CONTROL STRUCTURES WHEN THE DESIGN CAPACITY HAS BEEN REDUCED BY FIFTY PERCENT (50%). DURING SEDIMENT REMOVAL, THE CONTRACTOR SHALL TAKE CARE TO ENSURE THAT STRUCTURAL COMPONENTS OF EPSC MEASURES ARE NOT DAMAGED AND THUS MADE INEFFECTIVE. IF DAMAGE DOES OCCUR, THE CONTRACTOR SHALL REPAIR THE STRUCTURES AT THE CONTRACTOR'S OWN EXPENSE.

4. SEIMENT REMOVED FROM SEDIMENT CONTROL STRUCTURES SHALL BE PLACED AND BE TREATED IN A MANNER SO THAT THE SEDIMENT IS CONTAINED WITHIN THE PROJECT LIMITS AND DOES NOT MIGRATE INTO WATERS OF THE STATE/U.S. COST FOR THIS TREATMENT IS TO BE INCLUDED IN PRICE BID FOR ITEM NO. 209-05 SEDIMENT REMOVAL, C.Y.

5. THE CONTRATOR SHALL INSTALL A RAIN GAUGE EVERY LINEAR MILE AT ALL SITES WHERE CLEARING, GRUBBING, EXCAVATION, GRADING, CUTTING OR FILLING IS BEING ACTIVELY PERFORMED, OR EXPOSED SOIL HAS NOT YET BEEN PERMANENTLY STABILIZED. IF THE PROJECT LENGTH IS LESS THAN ONE LINEAR MILE, ONE RAIN GAUGE SHALL BE INSTALLED AT THE CENTER OF THE PROJECT OR AS INDICATED BY THE TDOT EPSC INSPECTOR. THE CONTRACTOR SHALL ENSURE THAT EACH GAUGE IS MAINTAINED IN GOOD WORKING CONDITION. TDOT AND/OR THE CONTRACTOR SHALL RECORD DAILY PRECIPITATION AND FORECASTED PERCENTAGE OF PRECIPITATION IN DETAILED RECORDS OF RAINFALL EVENTS INCLUDING DATES, AMOUNTS OR RAINFALL PER GAUGE, THE ESTIMATED DURATION (OR STARTING AND ENDING TIMES), AND FORECASTED PERCENTAGE OF PRECIPITATION FOR THE PROJECT. THIS INFORMATION SHALL BE PROVIDED TO THE ENGINEER ON A MONTHLY BASIS. THE COST FOR THE RAIN GAUGES IS TO BE INCLUDED IN THE UNIT BID PRICES FOR OTHER ITEMS. RAIN GAUGES SHALL BE AS SPECIFIED IN THE APPROVED TDOT RAINFALL MONITORING PLAN.

6. INSPECTION OF EPSC MEASURES SHALL BE DONE AT LEAST TWICE PER CALENDAR WEEK AT LEAST 72 HOURS APART. A CALENDAR WEEK IS DEFINED AS SUNDAY THROUGH SATURDAY.

7. OUTFALL POINTS SHALL BE INSPECTED TO ASCERTAIN WHETHER EPSC MEASURES ARE EFFECTIVE IN PREVENTING SIGNIFICANT IMPACTS TO SURROUDING WATERS. WHERE DISCHARGE LOCACTIONS ARE INACCESSIBLE, NEARBY DOWNSTREAM LOCATIONS SHALL BE INSPECTED. LOCATIONS WHERE VEHICLES ENTER AND EXIT THE SITE SHALL BE INSPECTED FOR EVIDENCE OF OFF-SITE ROADWAY SEDIMENT TRACKING.

8. UPON CONCLUSION OF THE INSPECTIONS, EPSC MEASURES FOUND TO BE INEFFECTIVE SHALL BE REPAIRED, REPLACED OR MODIFIED BEFORE THE NEXT RAIN EVENT, IF POSSIBLE, BUT IN NO CASE MORE THAN 24 HOURS AFTER THE INSPECTION OR WHEN THE CONDITION IS IDENTIFIED. IF THE REPAIR, REPLACEMENT OR MODIFICAITON IS NOT PRACTICAL WITHIN THE TIMEFRAME, WRITTEN DOCUMENTATION MUST BE PROVIDED IN THE FIELD BOOK AND AN ESTIMATED REPAIR, REPLACEMENT OR MODIFICATION SCHEDULE SHALL BE DOCUMENTED WITHIN 24 HOURS AFTER IDENTIFICATION.

9. THE CONTRACTOR SHALL ESTABLISH AND MAINTAIN A PROACTIVE METHOD TO PREVENT LITTER, CONSTRUCTION DEBRIS, AND CONSTRUCTION WASTES FROM ENTERING WATERS OF THE STATE/U.S.

10. THE CONTRACTOR SHALL TAKE APPROPRIATE STEPS TO ENSURE THAT PETROLEUM PRODUCTS OR OTHER CHEMICAL POLLUTANTS ARE PREVENTED FROM ENTERING WATERS OF THE STATE/U.S. ALL EQUIPMENT REFUELING, SERVICING, AND STAGING AREAS SHALL COMPLY WITH AL LOCAL, STATE, AND FEDERAL LAWS, RULES, REGULATIONS, AND ORDINANCES, INCLUDING THOSE OF THE NATIONAL FIRE PROTECITON ASSOCIATION (NFPA). APPROPRIATE CONTAINMENT MEASURES FOR THESE AREAS SHALL BE USED. ALL SPILLS MUST BE REPORTED TO THE APPROPRIATE AGENCY, AND MEASURES SHALL BE TAKEN IMMEDIATELY TO PREVENT THE POLLUTION OF WATERS OF THE STATE/U.S., INCLUDING GROUNDWATER, SHOULD A SPILL OCCUR.

STATE OF TENNESSEE
DEPARTMENT OF TRANSPORTATION

EROSION CONTROL DETAILS & NOTES

BR. NO. 16-SR002-13.68

PROJECT NO.	YEAR	SHEET NO.
16003-4241-04	2013	

REVISIONS

NO.	DATE	BY	BRIEF DESCRIPTION

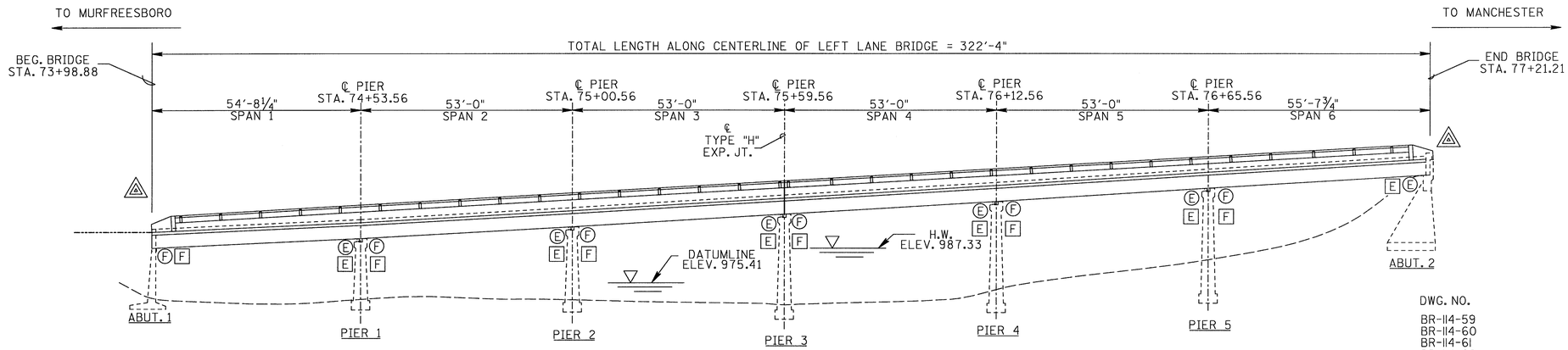

ELEVATION LEFT LANE BRIDGE

E: DENOTES EXPANSION SUPPORT
F: DENOTES FIXED SUPPORT

○ : DENOTES EXISTING SUPPORT CONDITION

□ : DENOTES PROPOSED SUPPORT CONDITION

△ : PROVIDE GUARDRAIL ATTACHMENT TO PARAPET IN ACCORDANCE WITH TDOT STD. DWG. S-GR-23, AND PROVIDE APPROACH GUARDRAIL IN IN ACCORDANCE WITH TDOT STD. DWG. S-GR-38.

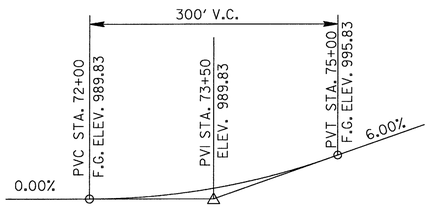

GRADE SKETCH FOR LEFT LANE BRIDGE

NOTE: CONTRACTOR TO FIELD VERIFY EXISTING SUBSTRUCTURE ELEVATIONS. ELEVATIONS BASED ON EXISTING PLANS. NOTIFY ENGINEER IF ELEVATIONS ARE NOT WITHIN 0.04 FT OF EXISTING PLANS ELEVATIONS. THIS GRADE SKETCH TO BE USED ONLY FOR LEFT LANE BRIDGE CONSTRUCTION ONLY.

LIST OF BRIDGE DRAWINGS

DWG. NO.	DESCRIPTION
BR-114-59	GENERAL ELEVATIONS
BR-114-60	LAYOUT OF BRIDGE
BR-114-61	BRIDGE ESTIMATED QUANTITIES
BR-114-62	BRIDGE GENERAL NOTES
BR-114-63	PHASED CONSTRUCTION
BR-114-64	DEMOLITION PLANS & DETAILS
BR-114-65	SUPERSTRUCTURE CROSS SECTION LEFT LANE BRIDGE
BR-114-66	SLAB PLAN LEFT LANE BRIDGE
BR-114-66A	SLAB PLAN DETAILS LEFT LANE BRIDGE
BR-114-67	FRAMING PLAN LEFT LANE BRIDGE
BR-114-67A	FRAMING PLAN DETAILS LEFT LANE BRIDGE
BR-114-68	BILL OF STEEL LEFT LANE
BR-114-69	PRESTRESSED BEAMS LEFT LANE BRIDGE
BR-114-70	LEFT LANE ABUTMENT DETAILS
BR-114-70A	LEFT LANE PIER DETAILS
BR-114-71	SUPERSTRUCTURE CROSS SECTION RIGHT LANE BRIDGE
BR-114-72	SLAB PLAN RIGHT LANE BRIDGE
BR-114-72A	SLAB PLAN DETAILS RIGHT LANE BRIDGE
BR-114-73	FRAMING PLAN AND DETAILS RIGHT LANE BRIDGE
BR-114-73A	FRAMING PLAN DETAILS RIGHT LANE BRIDGE
BR-114-74	BILL OF STEEL RIGHT LANE
BR-114-75	PRESTRESSED BEAM BMIR RIGHT LANE BRIDGE
BR-114-76	PRESTRESSED BEAMS BM2R-BM6 RIGHT LANE BRIDGE
BR-114-77	RIGHT LANE ABUTMENT DETAILS
BR-114-77A	RIGHT LANE PIER DETAILS
BR-114-78	GIRDER REPAIR DETAILS
BR-114-79	ABUTMENTS/PIERS REPAIR DETAILS
BR-114-80	STRIP SEAL EXPANSION JOINT DETAILS
BR-114-81	REPAIR DETAILS
BR-114-82	EMBANKMENT AND SIDEWALK DETAILS

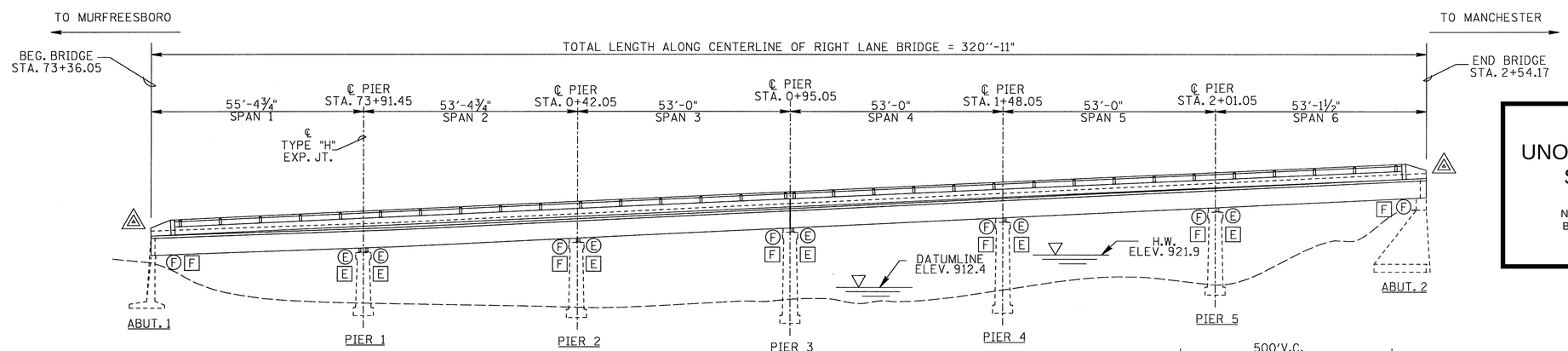

FOR RIGHT LANE ONLY ROADWAY EQUATION STA. 74+02.80 BACK = 0+00 FORWARD

ELEVATION RIGHT LANE BRIDGE

E: DENOTES EXPANSION SUPPORT
F: DENOTES FIXED SUPPORT

○ : DENOTES EXISTING SUPPORT CONDITION

□ : DENOTES PROPOSED SUPPORT CONDITION

△ : PROVIDE GUARDRAIL ATTACHMENT TO PARAPET IN ACCORDANCE WITH TDOT STD. DWG. S-GR-23, AND PROVIDE APPROACH GUARDRAIL IN IN ACCORDANCE WITH TDOT STD. DWG. S-GR-38.

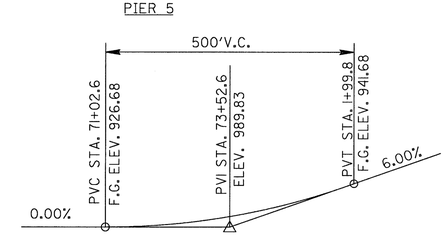

GRADE SKETCH FOR RIGHT LANE BRIDGE

NOTE: CONTRACTOR TO FIELD VERIFY EXISTING SUBSTRUCTURE ELEVATIONS. ELEVATIONS BASED ON EXISTING PLANS. NOTIFY ENGINEER IF ELEVATIONS ARE NOT WITHIN 0.04 FT OF EXISTING PLANS ELEVATIONS. THIS GRADE SKETCH TO BE USED ONLY FOR RIGHT LANE BRIDGE CONSTRUCTION ONLY.

UNOFFICIAL SET

NOT FOR BIDDING

STATE OF TENNESSEE
DEPARTMENT OF TRANSPORTATION
BUREAU OF HIGHWAYS

GENERAL ELEVATIONS
STATE ROUTE 2
OVER
LITTLE DUCK RIVER
BRIDGE NO. 16-SR002-13.68 RT. & LT.
RT. & LT. LANES
COFFEE COUNTY
2013

DESIGNED BY	WAP	DATE	SEPT. 2012
DRAWN BY	MP	DATE	SEPT. 2012
SUPERVISED BY	WAP	DATE	SEPT. 2012
CHECKED BY	WAP	DATE	SEPT. 2012

BR-114-59

PROJECT NO.	YEAR	SHEET NO.
16003-4241-04	2013	

REVISIONS

NO.	DATE	BY	BRIEF DESCRIPTION

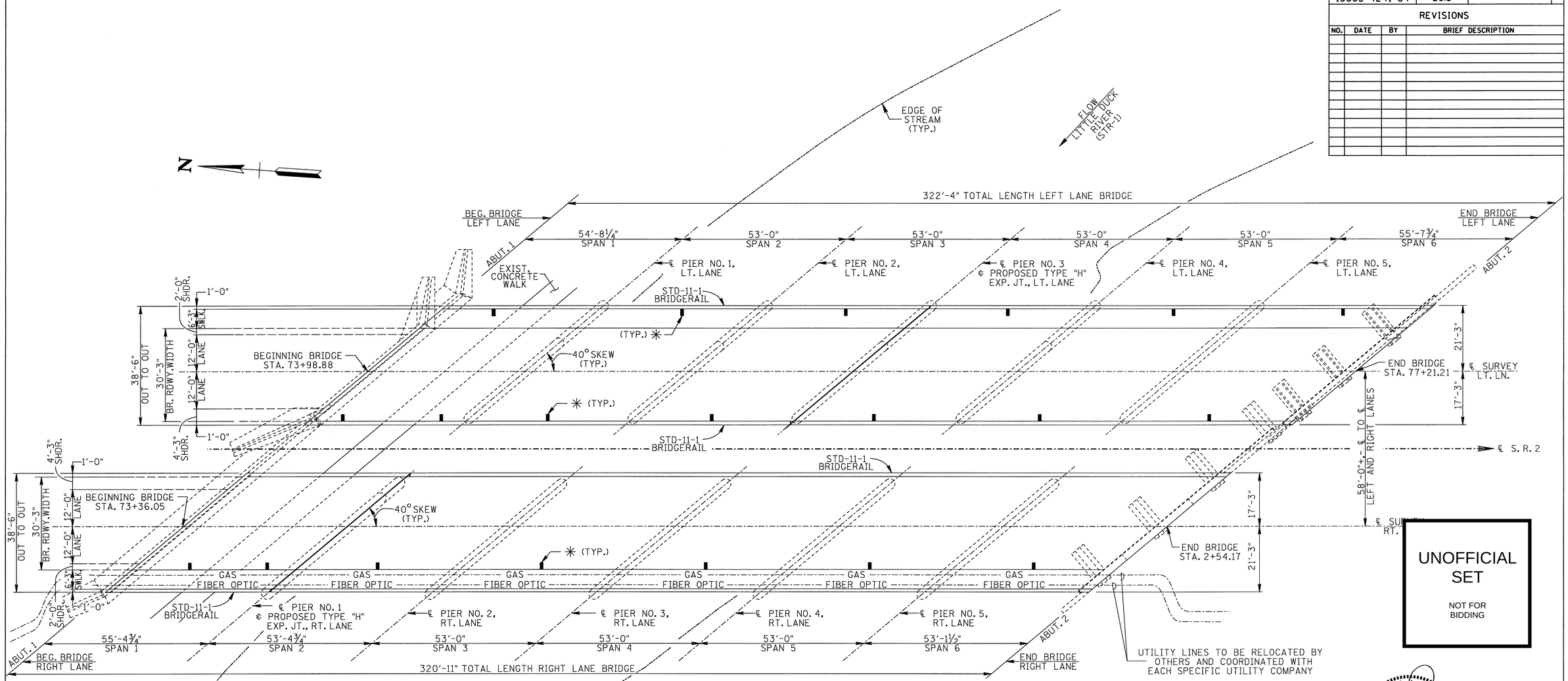

UNOFFICIAL SET

NOT FOR BIDDING

✳:INDICATES GRATED INLET DRAIN REQUIRED. SEE STANDARD DRAWING NO. STD-1-2SS FOR ADDITIONAL DETAILS.

LAYOUT

FOR RIGHT LANE ONLY ROADWAY EQUATION STA. 74+02.80 BACK = 0+00 FORWARD

NOTE: SEE SPECIAL NOTE DEMOLITION AND SPECIAL PROVISION NUMBER SP202ACM FOR REMOVAL OF TRANSITE DRAINS IN EXISTING BRIDGE DECK.

DRAIN LOCATION

	LEFT LANE BRIDGE		RIGHT LANE BRIDGE	
	LEFT SIDE	RIGHT SIDE	LEFT SIDE	RIGHT SIDE
SPAN 1	STA. 74+44.30	STA. 73+94.88	STA. 73+65.40	N/A
SPAN 1	N/A	STA. 74+29.58	STA. 73+98.88	N/A
SPAN 2	STA. 75+00.13	STA. 74+64.08	STA. 00+34.72	N/A
SPAN 3	STA. 75+53.13	STA. 75+17.08	STA. 00+87.72	N/A
SPAN 4	STA. 76+06.13	STA. 75+70.08	STA. 01+40.72	N/A
SPAN 5	STA. 76+59.13	STA. 76+23.08	STA. 01+93.72	N/A
SPAN 6	STA. 77+12.13	STA. 76+76.08	STA. 02+46.72	N/A

GENERAL SCOPE OF WORK

REMOVE & REPLACE OVERHANGS.

REMOVE & REPLACE BEAM "A" ON LEFT LANE & BEAM "E" ON RIGHT LANE.

RECONSTRUCT SIDEWALKS.

INSTALL PEDESTRIAN RAILS (STD-11-1).

ADD 4½" CONCRETE OVERLAY.

INSTALL NEW TYPE "H" EXPANSION JOINT AT PIER NO. 3 FOR LEFT AND RIGHT LANE BRIDGES.

MODIFY EXISTING PIER CAPS AND ABUTMENT BEAM TO ACCOMODATE NEW TYPE II PRESTRESSED CONCRETE BEAM.

REPAIR DELAMINATED AND/OR SPALLED CONCRETE THROUGHOUT STRUCTURE USING EITHER HIGH-EARLY STRENGTH CONCRETE OR PATCHING MATERIAL.

REMOVE & REPLACE GUARDRAIL.

PERFORM FULL & PARTIAL DEPTH DECK REPAIR.

TEXTURE COAT ALL EXPOSED CONCRETE SURFACES.

WINFORD A. PERRYMAN REGISTERED ENGINEER AGRICULTURE COMMERCE NO. 13774 STATE OF TENNESSEE 11-25-01 13

STATE OF TENNESSEE
DEPARTMENT OF TRANSPORTATION
BUREAU OF HIGHWAYS

LAYOUT OF BRIDGE
STATE ROUTE 2
OVER
LITTLE DUCK RIVER
BRIDGE NO. 16-SR002-13.68
RT. & LT. LANES
COFFEE COUNTY
2013

DESIGNED BY	WAP	DATE	SEPT. 2012
DRAWN BY	MP	DATE	SEPT. 2012
SUPERVISED BY	WAP	DATE	SEPT. 2012
CHECKED BY	WAP	DATE	SEPT. 2012

BR-114-60

PROJECT NO.	YEAR	SHEET NO.
16003-4241-04	2013	

REVISIONS

NO.	DATE	BY	BRIEF DESCRIPTION

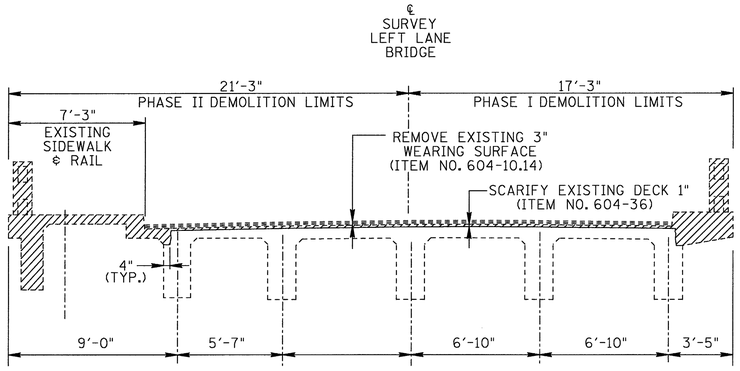

PHASE I & II DEMOLITION LEFT LANE BRIDGE

LOOKING FORWARD

DENOTES AREAS OF CONCRETE DECK, CURB & RAILING REMOVAL

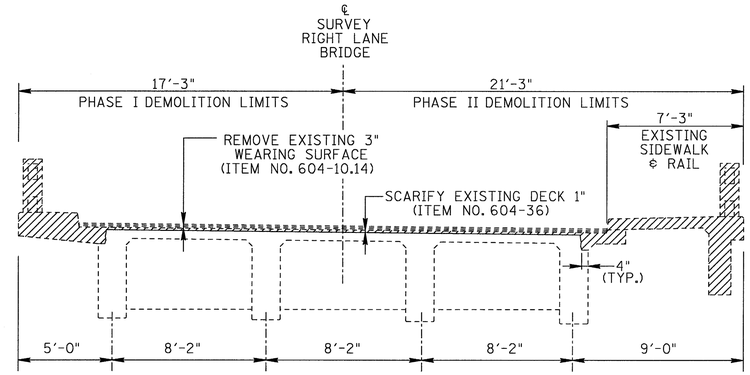

PHASE I & II DEMOLITION RIGHT LANE BRIDGE

LOOKING FORWARD

DENOTES AREAS OF CONCRETE DECK, CURB & RAILING REMOVAL

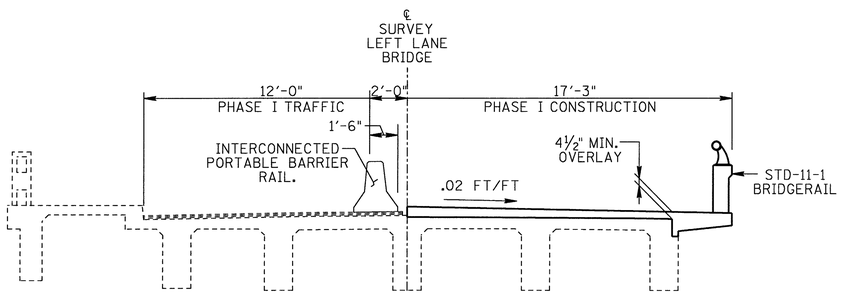

PHASE I CONSTRUCTION LEFT LANE BRIDGE

LOOKING FORWARD

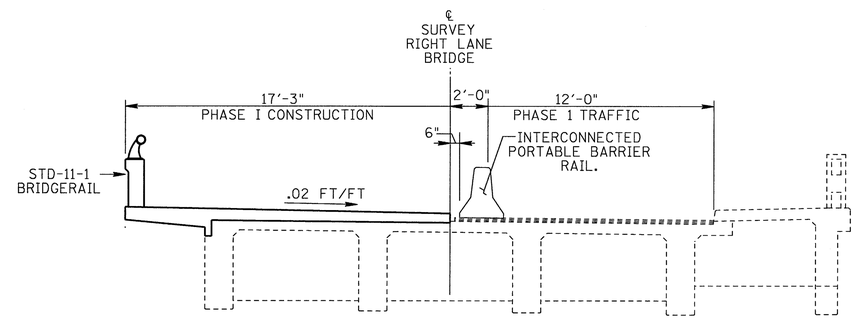

PHASE I CONSTRUCTION RIGHT LANE BRIDGE

LOOKING FORWARD

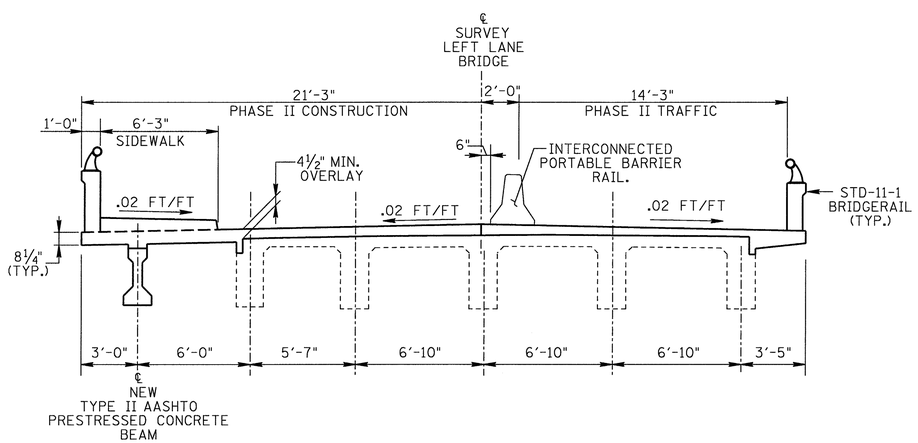

PHASE II CONSTRUCTION LEFT LANE BRIDGE

LOOKING FORWARD

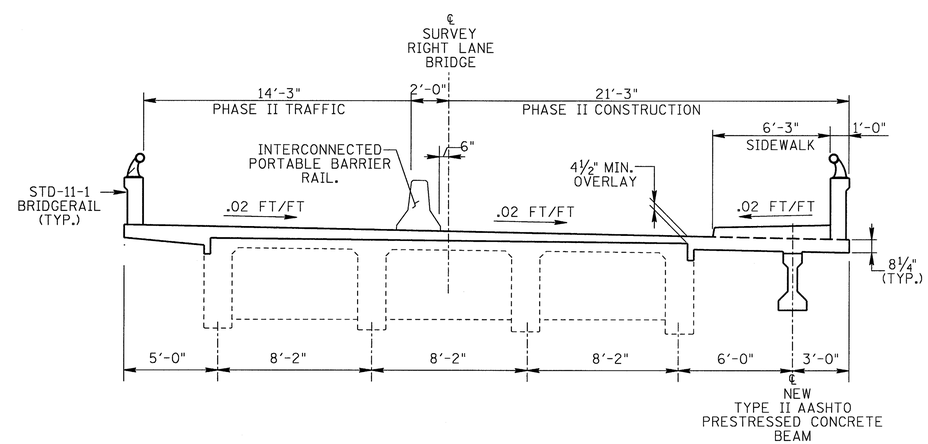

PHASE II CONSTRUCTION RIGHT LANE BRIDGE

LOOKING FORWARD

UNOFFICIAL SET

NOT FOR BIDDING

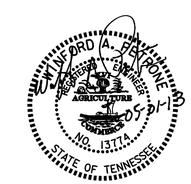

STATE OF TENNESSEE
DEPARTMENT OF TRANSPORTATION
BUREAU OF HIGHWAYS

PHASED CONSTRUCTION
STATE ROUTE 2
OVER
LITTLE DUCK RIVER
BRIDGE NO. 16-SR002-13.68
RT. & LT. LANES
COFFEE COUNTY
2013

DESIGNED BY	WAP	DATE	SEPT. 2012
DRAWN BY	MP	DATE	SEPT. 2012
SUPERVISED BY	WAP	DATE	SEPT. 2012
CHECKED BY	WAP	DATE	SEPT. 2012

BR-114-63

PROJECT NO.	YEAR	SHEET NO.
16003-4241-04	2013	

REVISIONS

NO.	DATE	BY	BRIEF DESCRIPTION

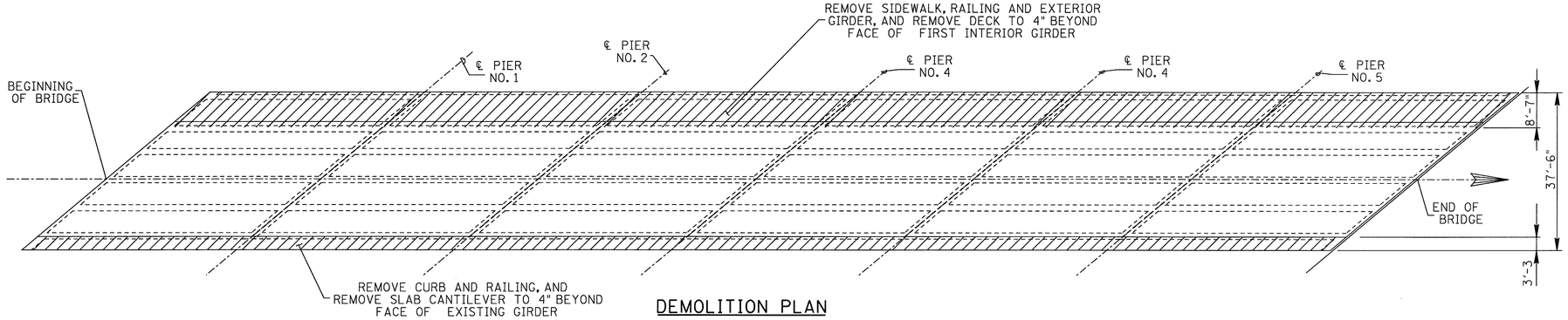

DEMOLITION PLAN

SHOWING LEFT LANE BRIDGE
(RIGHT LANE BRIDGE SIMILAR)

DENOTES REMOVAL OF EXISTING BRIDGE ELEMENTS

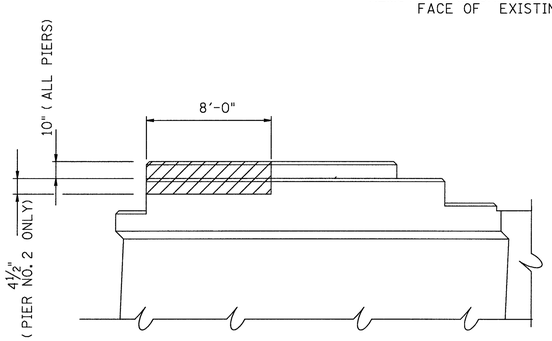

TYPICAL LEFT LANE PIER PART-ELEVATION

SHOWING DEMOLITION
LOOKING FORWARD

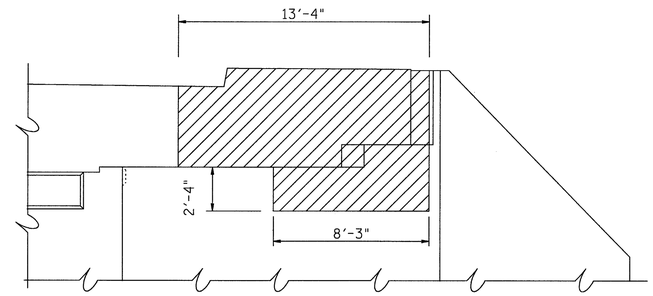

LEFT LANE ABUT. NO. 1 PART-ELEVATION

SHOWING DEMOLITION
LOOKING BACK

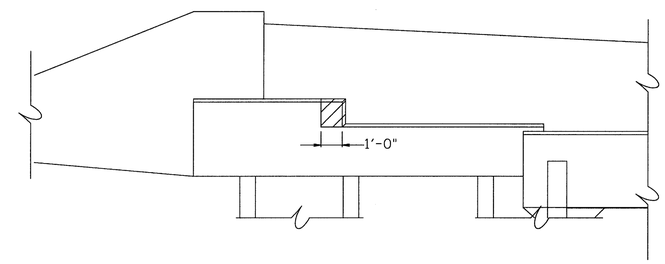

LEFT LANE ABUT. NO. 2 PART-ELEVATION

SHOWING DEMOLITION
LOOKING FORWARD

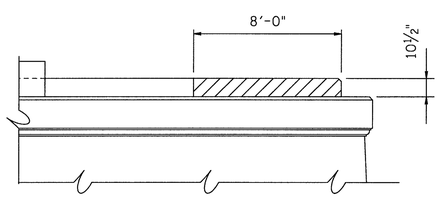

TYPICAL RIGHT LANE PIER PART-ELEVATION

SHOWING DEMOLITION
LOOKING FORWARD

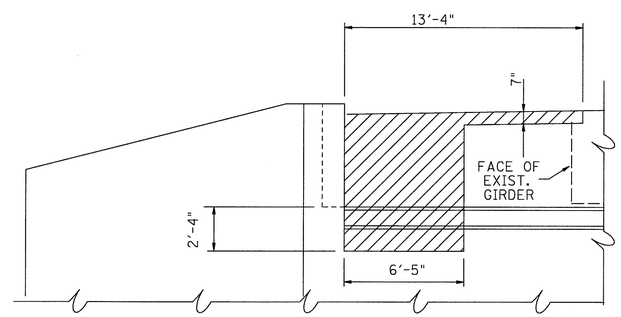

RIGHT LANE ABUT. NO. 1 PART-ELEVATION

SHOWING DEMOLITION
LOOKING BACK

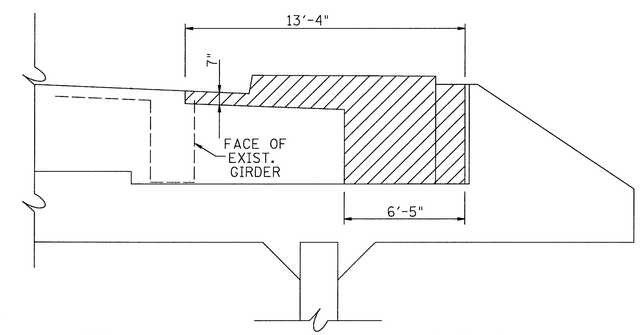

RIGHT LANE ABUT. NO. 2 PART-ELEVATION

SHOWING DEMOLITION
LOOKING FORWARD

NOTE: ALL DIMENSIONS SHOWN ON THIS SHEET ARE APPROXIMATE AND REQUIRES FIELD LOCATION. SEE DRAWING NO. BR-114-70 BR-114-70A, BR-114-77 & BR-114-77A FOR ELEVATIONS AND OTHER DETAILS.

UNOFFICIAL SET

NOT FOR BIDDING

WAFORD A. PETTIGREW
REGISTERED ENGINEER
AGRICULTURE
NO. 13714
STATE OF TENNESSEE
05-01-13

STATE OF TENNESSEE
DEPARTMENT OF TRANSPORTATION
BUREAU OF HIGHWAYS

DEMOLITION PLANS AND DETAILS
STATE ROUTE 2
OVER
LITTLE DUCK RIVER
BRIDGE NO. 16-SR002-13.68 RT. & LT.
RT. & LT. LANES
COFFEE COUNTY
2013

DESIGNED BY	JCP	DATE	SEPT. 2012
DRAWN BY	MP	DATE	SEPT. 2012
SUPERVISED BY	WAP	DATE	SEPT. 2012
CHECKED BY	WAP	DATE	SEPT. 2012

BR-114-64

PROJECT NO.	YEAR	SHEET NO.
16003-4241-04	2013	

REVISIONS

NO.	DATE	BY	BRIEF DESCRIPTION

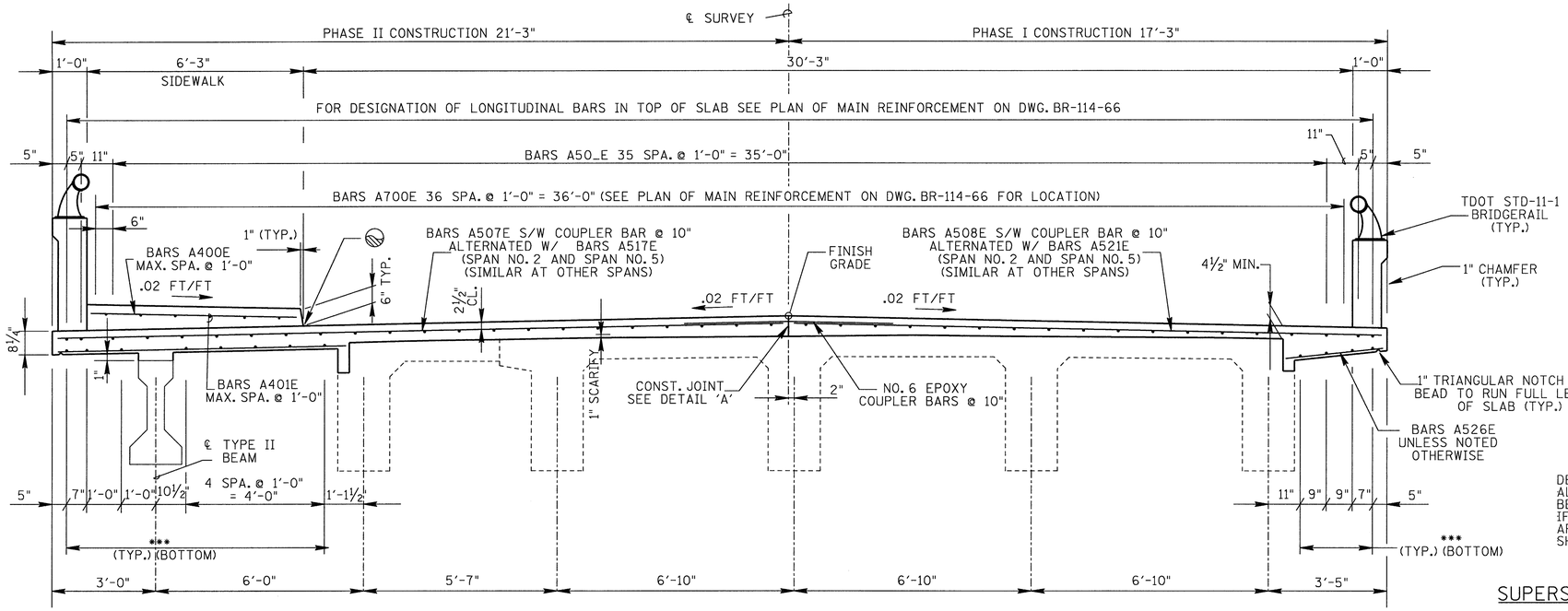

TYPICAL PROPOSED CROSS SECTION

LOOKING FORWARD ON SURVEY

*** BARS A500E S/W BARS A500E S/W BARS A500E S/W BARS A500E S/W BARS A500E S/W BARS A501E OR BARS A502E OR BARS A503E OR BARS A504E OR BARS A505E OR BARS A506E SIMILAR AS SHOWN ON DWG. BR-114-66 MAIN REINFOCEMENT PLAN

DENOTES: SEAL CONSTRUCTION JOINTS WITH CRACK SEALER AND PAID FOR UNDER ITEM NO. 617-02 AND 617-05

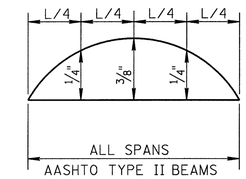

DEAD LOAD CORRECTION CURVE

DEAD LOAD CORRECTION CURVE: THIS CURVE IS FOR DEAD LOAD SLAB AND ALL DEAD LOADS THAT ARE APPLIED AFTER SLAB IS IN PLACE AND SHOULD BE CORRECTED TO COMPENSATE FOR EFFECTS DUE TO VERTICAL CURVE. IF PRESTRESSED DECK PANELS ARE USED AND THE BEAMS ARE PROFILED AFTER PANELS ARE IN PLACE, REDUCE THE DEAD LOAD CORRECTION VALUES SHOWN BY 25%.

SUPERSTRUCTURE NOTES:

NOTE: NO PORTION OF THE PARAPET SHALL BE POURED UNTIL THE ENTIRE DECK SLAB HAS BEEN POURED AND ALL SUPERSTUCTURE FALSEWORK HAS BEEN REMOVED.

NOTE: THE CONTRACTOR IS SOLELY RESPONSIBLE FOR SUPPORTING THE BEAMS TO PREVENT DAMAGE DUE TO TWISTING OR OVERTURNING DURING ALL PHASES OF CONSTRUCTION. IT IS STRONGLY RECOMMENDED THAT TEMPORARY ERECTION DIAPHRAGMS MUST BE INSTALLED PRIOR TO PLACING ANY LOADS ON THE BEAMS, HOWEVER, ERECTION DIAPHRAGMS MUST BE IN PLACE IN THE SPAN AT THE TIME THE SLAB IS POURED IN SAID SPAN.

NOTE: WHEN POURING SLAB, PROVISIONS SHALL BE MADE FOR SETTING REINFORCING STEEL FOR PARAPET. THE PARAPET SHALL NOT BE POURED UNTIL THE SLAB IS POURED AND CURED. SEE STANDARD DRAWING NO. STD-11-1 FOR PARAPET.

NOTE: THE SUPPORT DIAPHRAGMS AT THE PIER SHALL BE FORMED AND THE BOTTOM 15 INCHES POURED AS SOON AS POSSIBLE AFTER THE BEAMS HAVE BEEN SET. THE REMAINDER OF THE DIAPHRAGM SHALL BE POURED CONCURRENTLY WITH THE DECK SLAB. ALL DIAPHRAGM CONCRETE SHALL BE INCLUDED IN THE QUANTITY FOR ITEM NO. 604-03.09, CLASS "D" CONCRETE (BRIDGE DECK), C.Y.

NOTE: EXISTING REINFORCING STEEL PROTRUDING FROM DEMOLITION LIMITS OF REMAINING SLAB AND BEAM SHALL BE THOROUGHLY INSPECTED, COMPLETELY CLEANED AND INCORPORATED INTO NEW SLAB CONSTRUCTION. MINIMUM CONCRETE COVER OF 2" SHALL BE MAINTAINED ON ALL EXISTING REINFORCING STEEL INCORPORATED INTO NEW CONSTRUCTION.

NOTE: ALL COSTS ASSOCIATED WITH THE NEW 8¼" CONCRETE DECK SLAB, NEW CONCRETE CANTILEVERS AND PLACING THE CONCRETE FOR 4½" MIN. CONCRETE OVERLAY SHALL BE PAID FOR UNDER ITEM NO. 604-03.09, CLASS "D" CONCRETE (BRIDGE DECK), CY.

NOTE : COST OF EPOXY COATED REINFORCING STEEL INCLUDING MECHANICAL THREADED CONNECTORS SHALL BE PAID FOR UNDER ITEM NO. 604-02.03, EPOXY COATED REINFORCING STEEL, LBS. SEE BILL OF STEEL AND BAR BENDS ON DWG NO. BR-114-68.

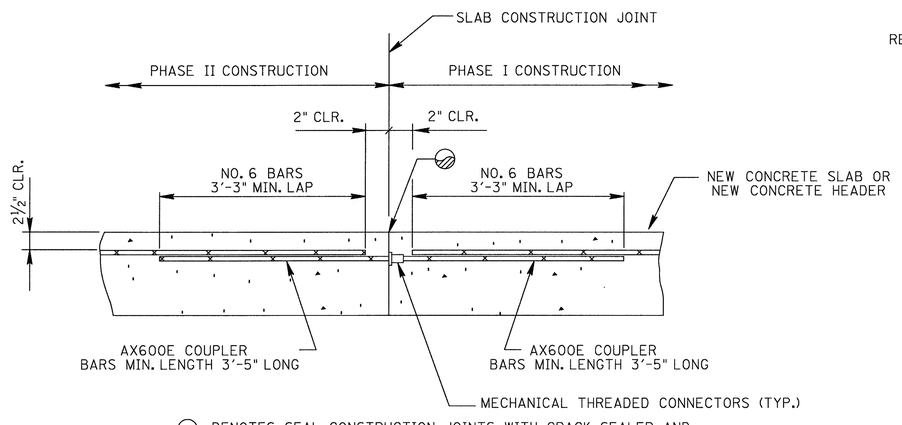

DENOTES: SEAL CONSTRUCTION JOINTS WITH CRACK SEALER AND PAID FOR UNDER ITEM NO. 617-02 AND 617-05

DETAIL 'A'

SHOWING TRANSVERSE REINFORCING STEEL SPLICING WITH MECHANICAL THREADED CONNECTORS

COST OF MECHANICAL THREADED CONNECTORS WITH COUPLER BARS WITHIN THE NEW CONCRETE SLAB SHALL BE PAID FOR IN ITEM NO. 604-02.03, EPOXY COATED REINFORCING STEEL.

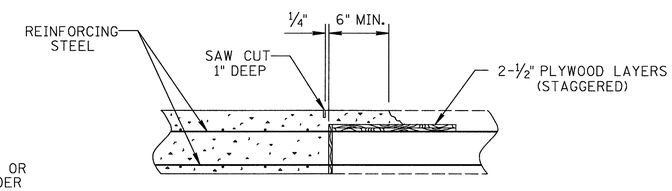

SLAB CONSTRUCTION JOINT DETAIL

NOTE: SLAB CONSTRUCTION JOINTS MAY BE LOCATED AT THE CONTRACTOR'S OPTION EXCEPT NO JOINT MAY BE LOCATED CLOSER THAN 1/5 SPAN LENGTH FROM AN INTERIOR SUPPORT. THE CONTRACTOR SHALL MAKE ADEQUATE PROVISIONS DURING PLACEMENT OF SLAB TO PREVENT THE EXTERIOR BEAM FROM TWISTING. NO EQUIPMENT SHALL BE PERMITTED ON THE BRIDGE UNTIL ALL POURS ARE MADE AND THE CONCRETE IS PROPERLY CURED. ALL SLAB CONSTRUCTION JOINTS SHALL BE IN ACCORDANCE WITH THE SLAB CONSTRUCTION JOINT DETAIL SHOWN ABOVE.

UNOFFICIAL SET

NOT FOR BIDDING

ESTIMATED QUANTITIES- LEFT LANE BRIDGE			
ITEM NO. 604-03.09	ITEM NO. 604-03.01	ITEM NO. 604-02.03	ITEM NO. 604-03.0
CLASS "D" CONCRETE C.Y.	CLASS "A" CONCRETE C.Y.	EPOXY COATED REINFORCING STEEL LBS.	REINFORCING STEEL LBS.
334	7	60725	3415

WINFORD A. PETRONE
REGISTERED ENGINEER
AGRICULTURA
NO. 13774
STATE OF TENNESSEE
05-01-13

STATE OF TENNESSEE
DEPARTMENT OF TRANSPORTATION
BUREAU OF HIGHWAYS

SUPERSTRUCTURE CROSS SECTION
LEFT LANE BRIDGE
STATE ROUTE 2
OVER
LITTLE DUCK RIVER
BRIDGE NO. 16-SR002-13.68
COFFEE COUNTY
2013

DESIGNED BY	JCP	DATE	JULY 2012
DRAWN BY	MP	DATE	JULY 2012
SUPERVISED BY	WAP	DATE	JULY 2012
CHECKED BY	WAP	DATE	JULY 2012

BR-114-65

PROJECT NO.	YEAR	SHEET NO.
16003-4241-04	2013	

REVISIONS

DATE	BY	BRIEF DESCRIPTION

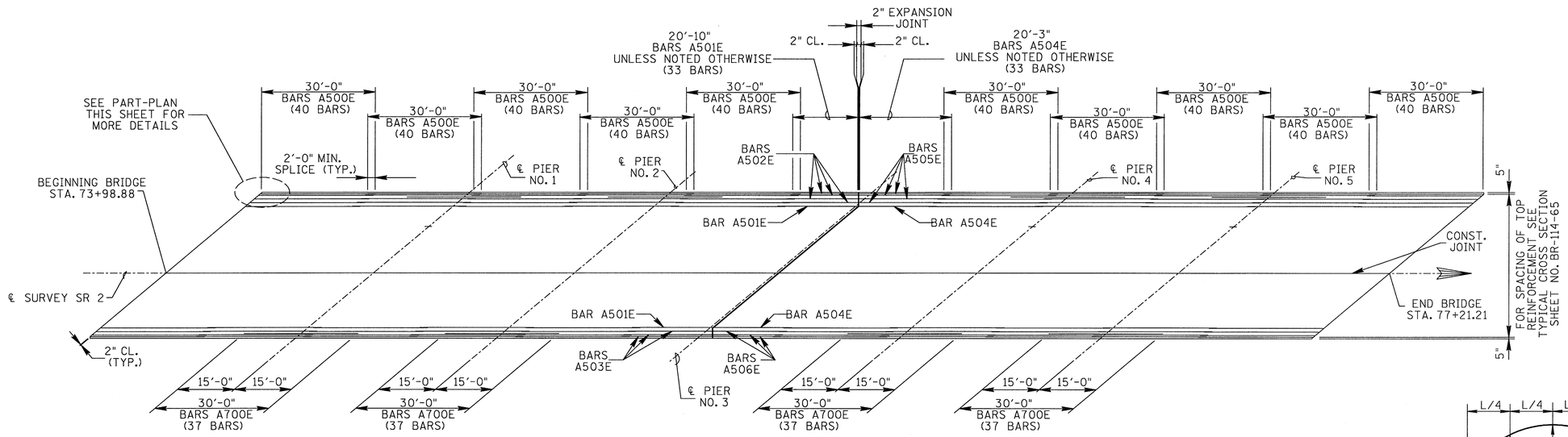

PLAN OF MAIN REINFORCEMENT

TOP OF SLAB

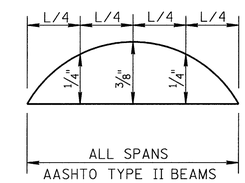

DEAD LOAD CORRECTION CURVE

DEAD LOAD CORRECTION CURVE: THIS CURVE IS FOR DEAD LOAD SLAB AND ALL DEAD LOADS THAT ARE APPLIED AFTER SLAB IS IN PLACE AND SHOULD BE CORRECTED TO COMPENSATE FOR EFFECTS DUE TO VERTICAL CURVE. IF PRESTRESSED DECK PANELS ARE USED AND THE BEAMS ARE PROFILED AFTER PANELS ARE IN PLACE, REDUCE THE DEAD LOAD CORRECTION VALUES SHOWN BY 25%.

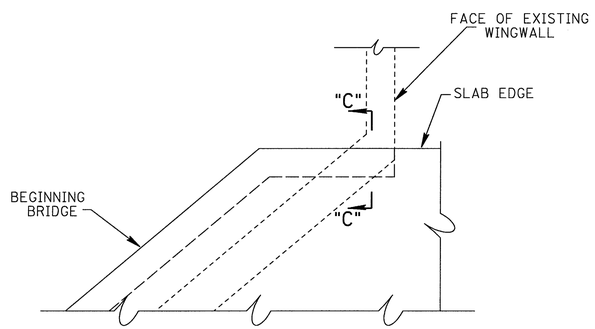

PART- PLAN OF BRIDGE DECK

SHOWING DECK SLAB TURNDOWN

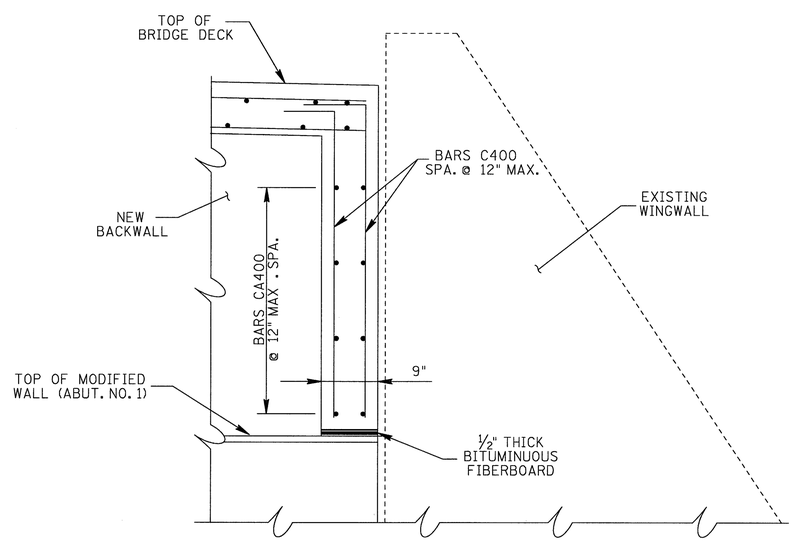

SECTION "C"-"C"

SHOWING REINFORCEMENT FOR SLAB TURNDOWN ONLY

UNOFFICIAL SET

NOT FOR BIDDING

WAYNE A. PETTIGREW REGISTERED ENGINEER DEPARTMENT OF AGRICULTURE NO. 13774 STATE OF TENNESSEE 05-01-13

STATE OF TENNESSEE
DEPARTMENT OF TRANSPORTATION
BUREAU OF HIGHWAYS

SLAB PLAN
LEFT LANE BRIDGE
STATE ROUTE 2
OVER
LITTLE DUCK RIVER
BRIDGE NO. 16-SR002-13.68
COFFEE COUNTY
2013

DESIGNED BY	JCP	DATE	JULY 2012
DRAWN BY	MP	DATE	JULY 2012
SUPERVISED BY	WAP	DATE	JULY 2012
CHECKED BY	WAP	DATE	JULY 2012

BR-114-66

PROJECT NO.	YEAR	SHEET NO.
16003-4241-04	2013	

REVISIONS

DATE	BY	BRIEF DESCRIPTION

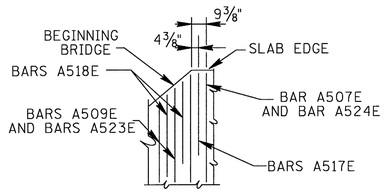

DETAIL "D1"

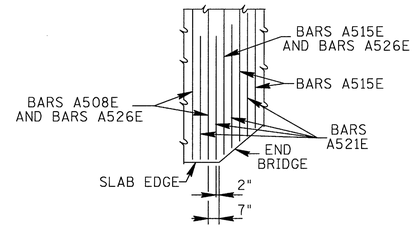

DETAIL "E1"

Ⓐ DENOTES: BARS A507 S/W COUPLER S/W SERIES BARS A510E
14 SPA. @ 10" = 11'-8"

Ⓑ DENOTES: SERIES BARS A507E S/W COUPLER*
5 SPA. @ 10" = 4'-2"

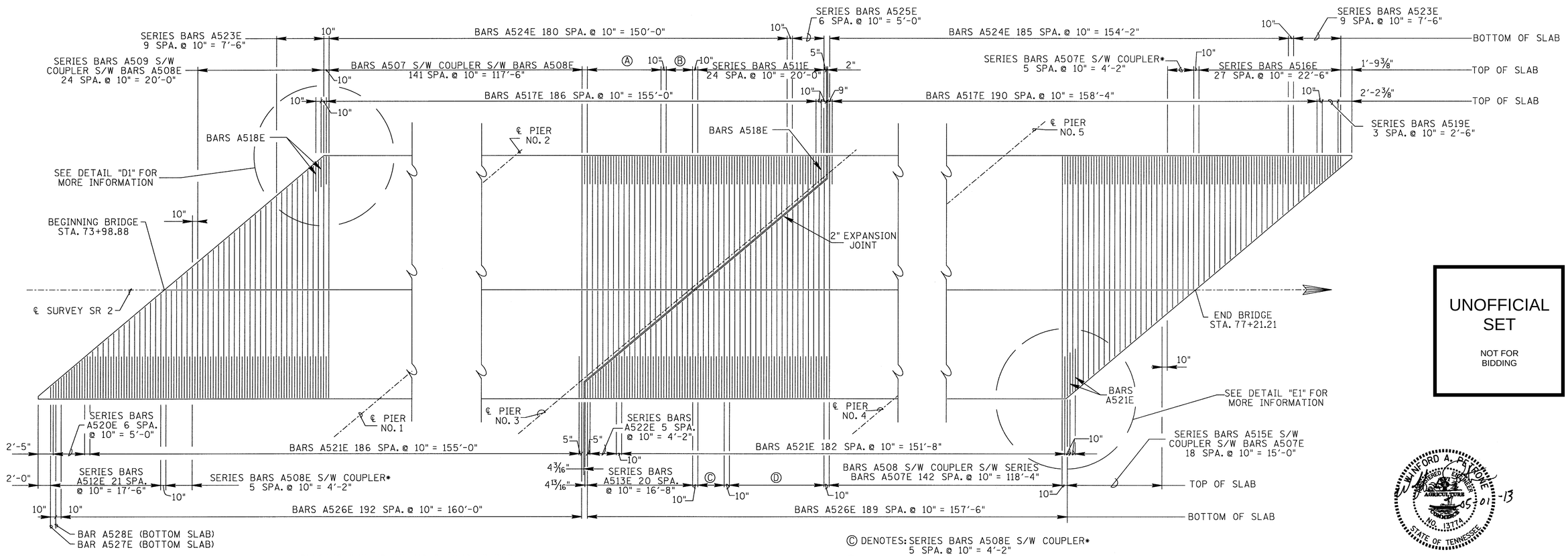

* DENOTES CUT TO FIT NO. 6 COUPLER BAR

Ⓒ DENOTES: SERIES BARS A508E S/W COUPLER*
5 SPA. @ 10" = 4'-2"

Ⓓ DENOTES: BARS A508 S/W COUPLER S/W SERIES BARS A514E
18 SPA. @ 10" = 15'-0"

SLAB PLAN

SHOWING TRANSVERSE REINFORCEMENT

UNOFFICIAL SET

NOT FOR BIDDING

STATE OF TENNESSEE
DEPARTMENT OF TRANSPORTATION
BUREAU OF HIGHWAYS

SLAB PLAN DETAILS
LEFT LANE BRIDGE
STATE ROUTE 2
OVER
LITTLE DUCK RIVER
BRIDGE NO. 16-SR002-13.68
COFFEE COUNTY
2013

DESIGNED BY	JCP	DATE	JULY 2012
DRAWN BY	MP	DATE	JULY 2012
SUPERVISED BY	WAP	DATE	JULY 2012
CHECKED BY	WAP	DATE	JULY 2012

BR-114-66A

PROJECT NO.	YEAR	SHEET NO.
16003-4241-04	2013	

REVISIONS

DATE	BY	BRIEF DESCRIPTION

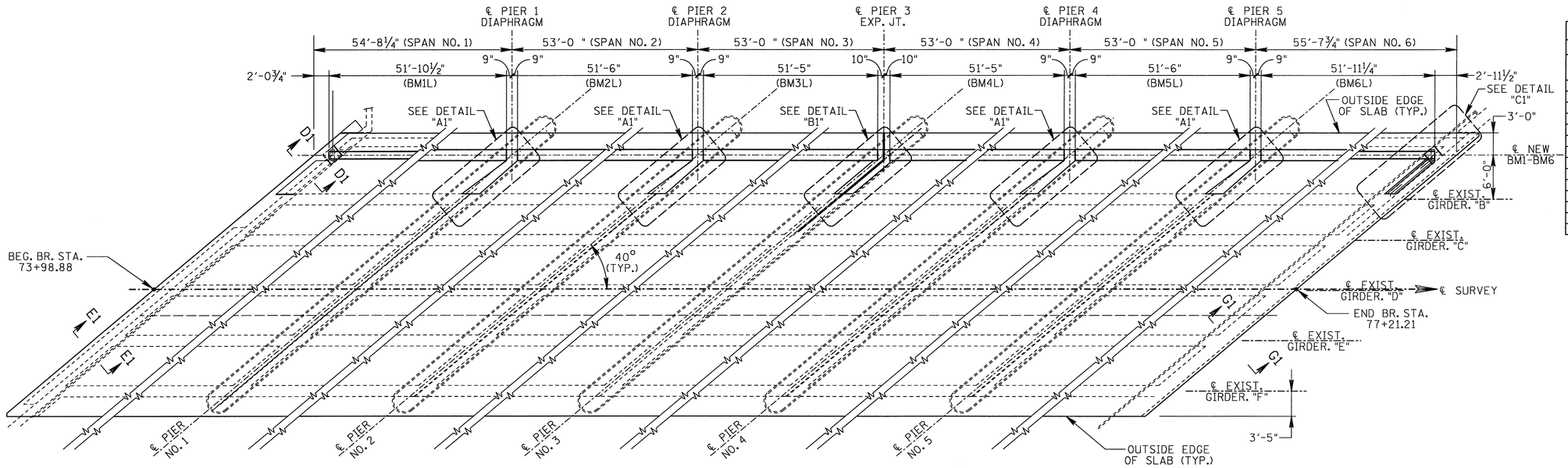

FRAMING PLAN: LEFT LANE BRIDGE

NOTE: REMOVE TOP OF EXISTING ABUTMENT AS SHOWN. CLEAN AND STRAIGHTEN EXISTING REINFORCEMENT AND INCORPORATE INTO NEW CONSTRUCTION.

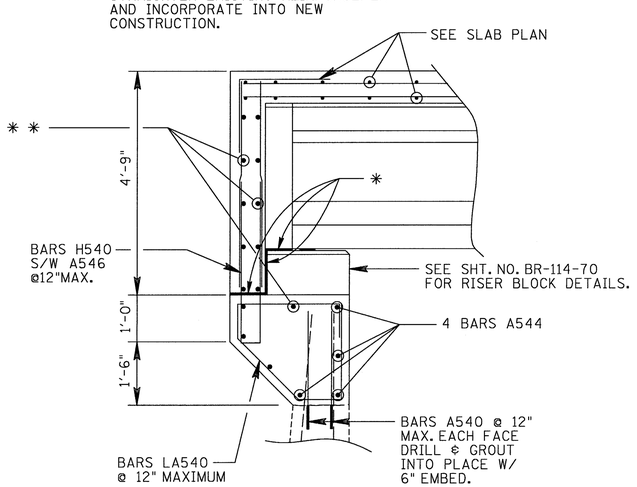

SECTION "D1-D1"

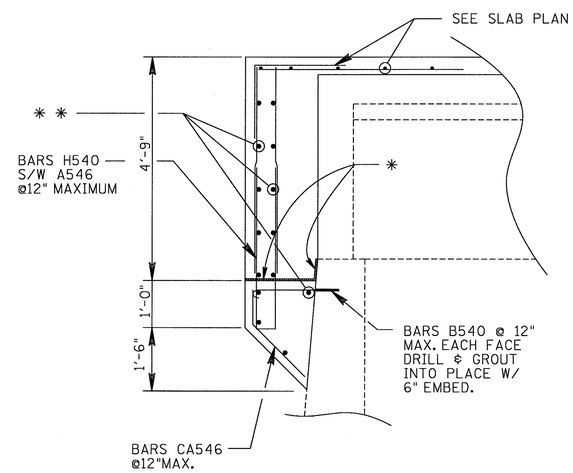

SECTION "E1-E1"

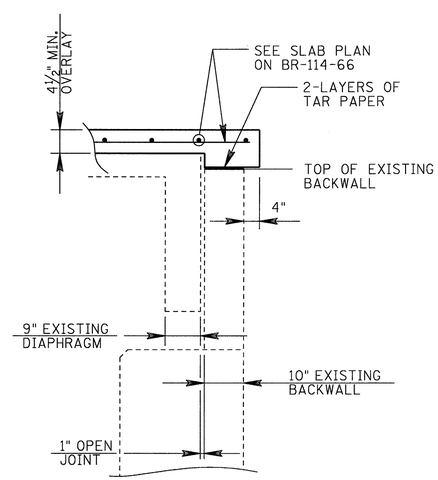

SECTION "G1-G1"

* : INDICATES ½" THK. BIT. FIBERBOARD

* * : INDICATES BARS A542 (PHASE 1) S/W NO. 6 COUPLER BARS S/W BARS A543 (PHASE 2) @ 12" MAX. (TYP.)

UNOFFICIAL SET

NOT FOR BIDDING

STATE OF TENNESSEE
DEPARTMENT OF TRANSPORTATION
BUREAU OF HIGHWAYS

FRAMING PLAN
LEFT LANE BRIDGE
STATE ROUTE 2
OVER
LITTLE DUCK RIVER
BRIDGE NO. 16-SR002-13.68
COFFEE COUNTY
2013

DESIGNED BY	WAP	DATE	JULY 2012
DRAWN BY	MP	DATE	JULY 2012
SUPERVISED BY	WAP	DATE	JULY 2012
CHECKED BY	WAP	DATE	JULY 2012

BR-114-67

PROJECT NO.	YEAR	SHEET NO.
16003-4241-04	2013	

REVISIONS

DATE	BY	BRIEF DESCRIPTION

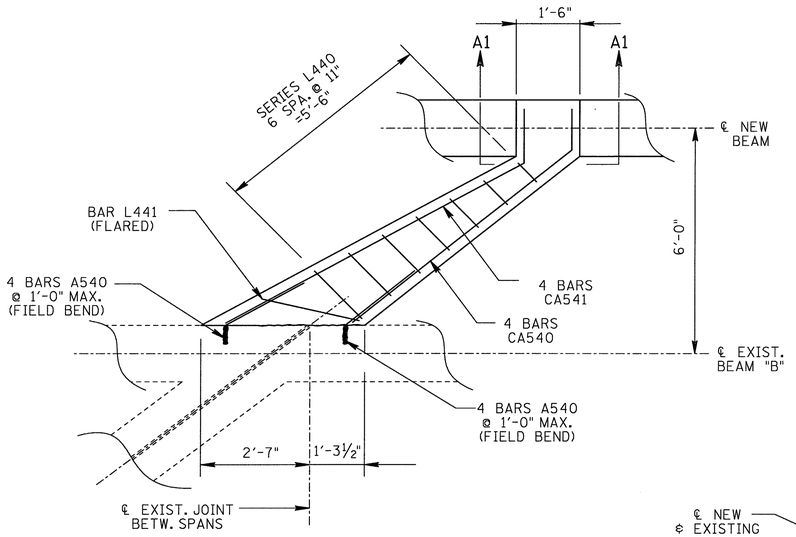

DETAIL "A1"

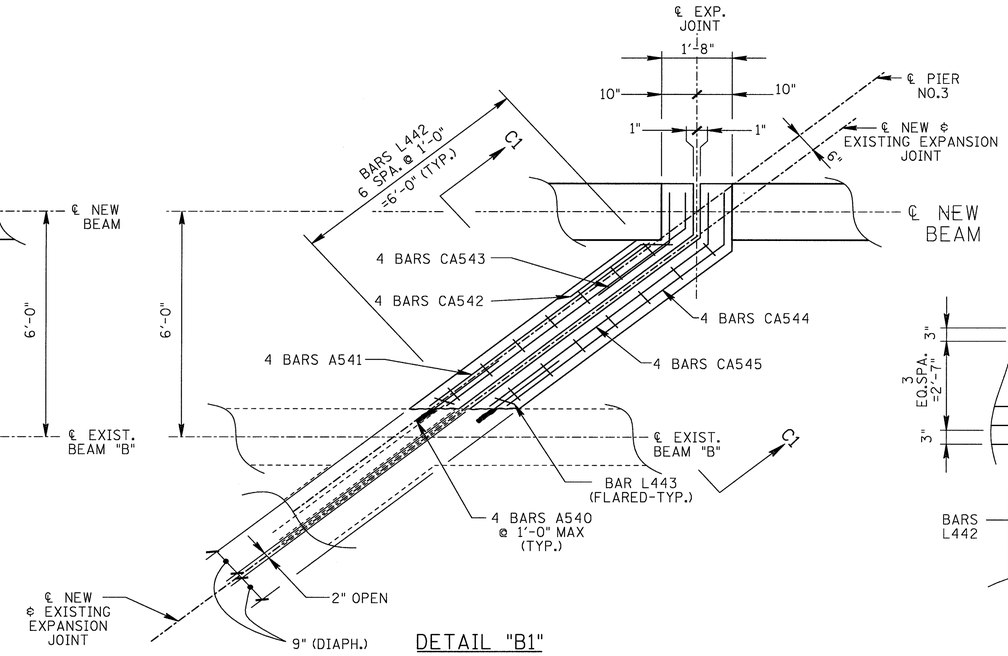

DETAIL "B1"

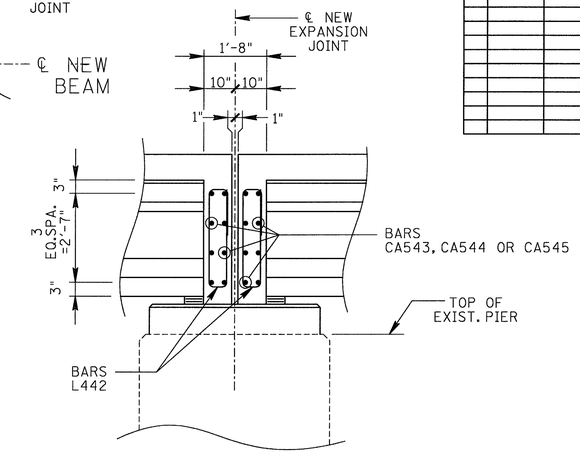

SECTION "C1-C1"

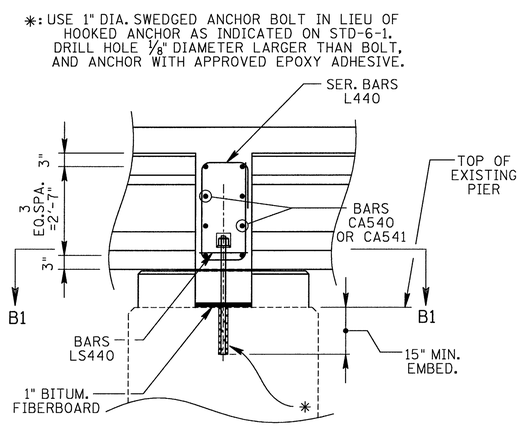

SECTION "A1-A1"

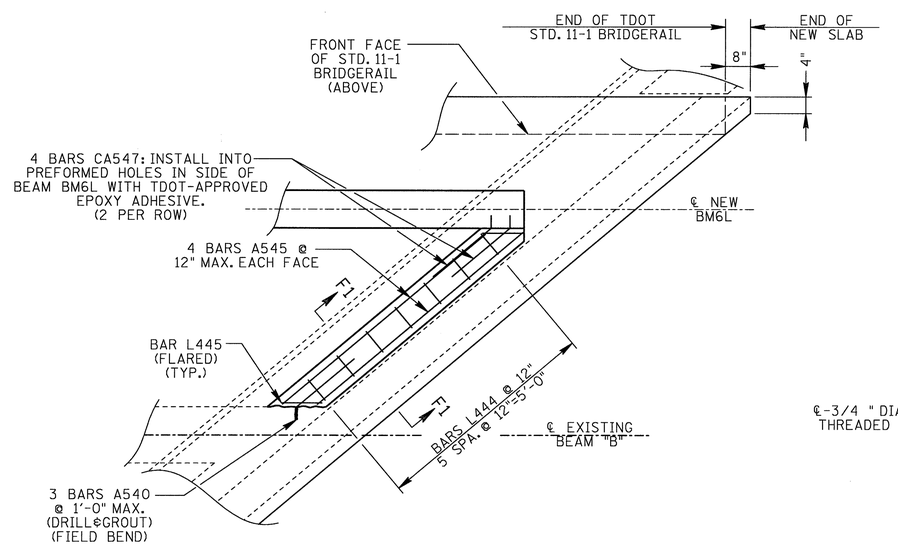

DETAIL "C1"

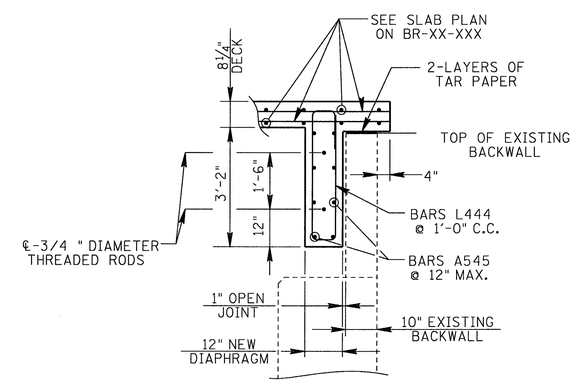

SECTION "F1-F1"

UNOFFICIAL SET

NOT FOR BIDDING

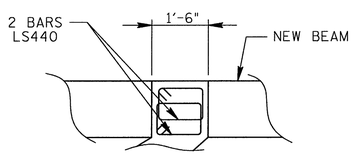

SECTION "B1-B1"

DESIGNED BY	WAP	DATE	JULY 2012
DRAWN BY	MP	DATE	JULY 2012
SUPERVISED BY	WAP	DATE	JULY 2012
CHECKED BY	WAP	DATE	JULY 2012

STATE OF TENNESSEE
DEPARTMENT OF TRANSPORTATION
BUREAU OF HIGHWAYS

FRAMING PLAN DETAILS
LEFT LANE BRIDGE
STATE ROUTE 2
OVER
LITTLE DUCK RIVER
BRIDGE NO. 16-SR002-13.68
COFFEE COUNTY
2013

BR-114-67A

BILL OF STEEL

BAR	LOCATION	SIZE	NO. REQ'D	BENDING DIMENSIONS A	B	C	D	LENGTH
A400E	SIDEWALK	4	324					5'-11"
A401E	SIDEWALK	4	84					30'-0"
A500E	SLAB	5	520					30'-0"
A501E	SLAB	5	39					20'-10"
A502E	SLAB	5	7					19'-11"
A503E	SLAB	5	6					23'-7"
A504E	SLAB	5	39					20'-3"
A505E	SLAB	5	7					24'-3"
A506E	SLAB	5	6					19'-4"
A507E	SLAB	5	332					20'-11"
A508E	SLAB	5	341					16'-11"
SERIES								
A509E	SLAB	5	1	*				310'-11"
				* DIM. VARIES FROM 4'-0¾" TO 20'-9¾" BY INC. OF 8⅜" (25 BARS TOTAL)				
SERIES								
A510E	SLAB	5	1	*				133'-3"
				* DIM. VARIES FROM 4'-0" TO 13'-9¼" BY INC. OF 8⅜" (15 BARS TOTAL)				
SERIES								
A511E	SLAB	5	1	*				299'-0"
				* DIM. VARIES FROM 3'-7" TO 20'-4" BY INC. OF 8⅜" (25 BARS TOTAL)				
SERIES								
A512E	SLAB	5	1	*				199'-3"
				* DIM. VARIES FROM 1'-8¾" TO 16'-4⅝" BY INC. OF 8⅜" (22 BARS TOTAL)				
SERIES								
A513E	SLAB	5	1	*				199'-11"
				* DIM. VARIES FROM 2'-6½" TO 16'-6" BY INC. OF 8⅜" (21 BARS TOTAL)				
SERIES								
A514E	SLAB	5	1	*				198'-9"
				* DIM. VARIES FROM 4'-2¼" TO 16'-9" BY INC. OF 8⅜" (19 BARS TOTAL)				
SERIES								
A515E	SLAB	5	1	*				197'-4"
				* DIM. VARIES FROM 4'-1¼" TO 16'-8" BY INC. OF 8⅜" (19 BARS TOTAL)				
SERIES								
A516E	SLAB	5	1	*				307'-7"
				* DIM. VARIES FROM 1'-6⅝" TO 20'-5" BY INC. OF 8⅜" (28 BARS TOTAL)				
A517E	SLAB	5	378					4'-4"
A518E	SLAB	5	3					4'-0"

BAR	LOCATION	SIZE	NO. REQ'D	BENDING DIMENSIONS A	B	C	D	LENGTH
SERIES								
A519E	SLAB	5	1	*				11'-9"
				* DIM. VARIES FROM 1'-10⅝" TO 4'-0" BY INC. OF 8⅜" (4 BARS TOTAL)				
SERIES								
A520E	SLAB	5	1	*				29'-0"
				* DIM. VARIES FROM 2'-0⅝" TO 6'-2⅞" BY INC. OF 8⅜" (7 BARS TOTAL)				
A521E	SLAB	5	370					6'-6"
SERIES								
A522E	SLAB	5	1	*				27'-9"
				* DIM. VARIES FROM 2'-10⅝" TO 6'-4½" BY INC. OF 8⅜" (6 BARS TOTAL)				
SERIES								
A523E	SLAB	5	2	*				48'-7"
				* DIM. VARIES FROM 1'-8⅝" TO 8'-0" BY INC. OF 8⅜" (10 BARS TOTAL)				
A524E	SLAB	5	367					8'-1"
SERIES								
A525E	SLAB	5	1	*				39'-7"
				* DIM. VARIES FROM 3'-6¾" TO 7'-9" BY INC. OF 8⅜" (7 BARS TOTAL)				
A526E	SLAB	5	383					2'-6"
A527E	SLAB	5	1					1'-8"
A528E	SLAB	5	1					2'-4"
NO. 6 EPOXY COUPLER BAR		6	387					6'-10"
A700E	SLAB	7	148					30'-0"
A540	PIER DIAPH. & ABUT.	5	59					2'-6"
A541	PIER DIAPHRAGM	5	4					6'-8"
A542	ABUT./BACKWALL	5	14					26'-5"
A543	ABUT./BACKWALL	5	14					32'-7"
A544	ABUT./BACKWALL	5	4					7'-9"
A545	ABUT./BACKWALL	5	8					7'-0"
A546	ABUT./BACKWALL	5	118					4'-4"
A547	RISER	5	10					2'-4"
B540	ABUT./BACKWALL	5	53	1'-1"				1'-8"

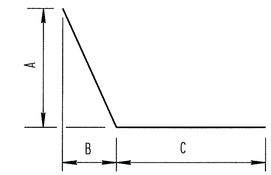

BARS VP

PROJECT NO.	YEAR	SHEET NO.
16003-4241-04	2013	

REVISIONS

DATE	BY	BRIEF DESCRIPTION

BAR	LOCATION	SIZE	NO. REQ'D	BENDING DIMENSIONS A	B	C	D	LENGTH
C400	SLAB	4	4	4'-2"				4'-8"
CA401	SLAB	4	8	3'-6"	6"	2⅞"	4⅝"	4'-0"
CA541	PIER DIAPHRAGM	5	16	8'-2"	1'-5"	1'-2½"	8¾"	9'-7"
CA542	PIER DIAPHRAGM	5	4	2'-2"	9"	5¾"	6⅞"	2'-11"
CA543	PIER DIAPHRAGM	5	4	2'-2"	1'-4"	1'-0¼"	10¼"	3'-6"
CA544	PIER DIAPHRAGM	5	4	6'-8"	1'-4½"	1'-0⅝"	10⅝"	8'-0½"
CA545	PIER DIAPHRAGM	5	4	6'-8½"	1'-4"	1'-0¼"	10¼"	8'-0½"
CA546	PIER DIAPHRAGM	5	53	1'-9"	9"	5⅞"	6¾"	2'-6"
CA547	ABUT./BACKWALL	5	4	2'-0"	5"	3"	2 9/16"	2'-5"
H540	ABUT./BACKWALL	5	59	5"	3'-9"			7'-11"
LA540	ABUT./BACKWALL	5	7	2'-2"	1'-0"	2'-2"	9"	8'-10½"
SERIES								
L440	PIER DIAPHRAGM	4	4	*	12"	2'-8"		60'-8"
				* DIM. A VARIES FROM 8" TO 1'-8" IN INCR. OF 2" (7 BARS TOTAL)				
L441	PIER DIAPHRAGM	4	4	2'-4½"	1'-0"	2'-8"		11'-1"
L442	PIER DIAPHRAGM	4	14	5"	1'-0"	2'-8"		7'-2"
L443	PIER DIAPHRAGM	4	2	5¾"	1'-0"	2'-8"		7'-3½"
L444	ABUT./BACKWALL	4	6	8"	1'-0"	3'-5"		9'-2"
L445	ABUT./BACKWALL	4	2	1'-0"	1'-0"	3'-5"		9'-10"
LS440	PIER DIAPHRAGM	4	8	1'-2"	1'-2"			5'-5"
NO. 6	COUPLER BAR (PLAIN)	6	14					6'-10"
LA441	RISER	4	4	1'-8"	6"	1'-7"	9"	4'-6"

UNOFFICIAL SET

NOT FOR BIDDING

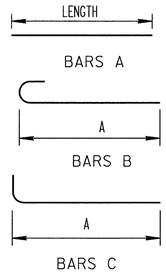

BARS A

BARS B

BARS C

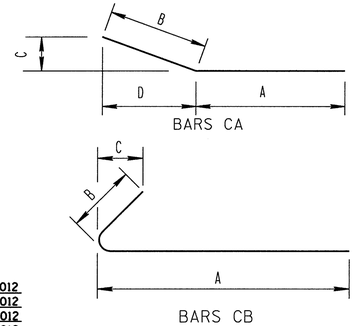

BARS CA

BARS CB

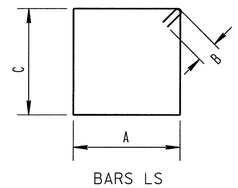

BARS LS

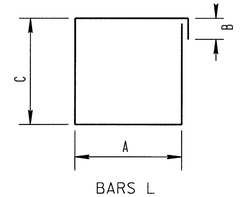

BARS L

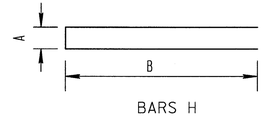

BARS H

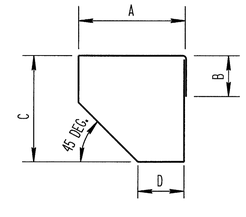

BARS LA

DESIGNED BY	JCP	DATE	JULY 2012
DRAWN BY	MP	DATE	JULY 2012
SUPERVISED BY	WAP	DATE	JULY 2012
CHECKED BY	WAP	DATE	JULY 2012

STATE OF TENNESSEE
DEPARTMENT OF TRANSPORTATION
BUREAU OF HIGHWAYS

BILL OF STEEL LEFT LANE
STATE ROUTE 2
OVER
LITTLE DUCK RIVER
BRIDGE NO. 16-SR002-13.68
COFFEE COUNTY
2013

BR-114-68

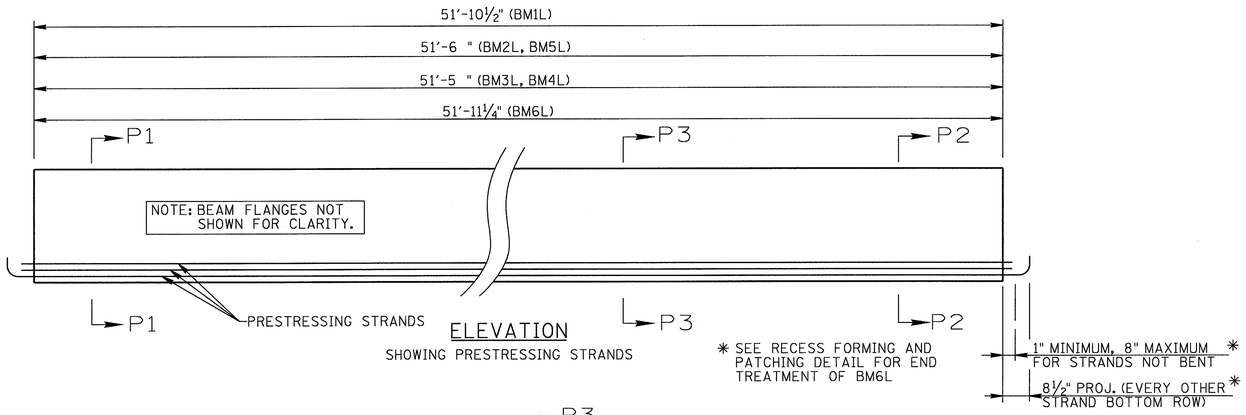

ELEVATION

SHOWING PRESTRESSING STRANDS

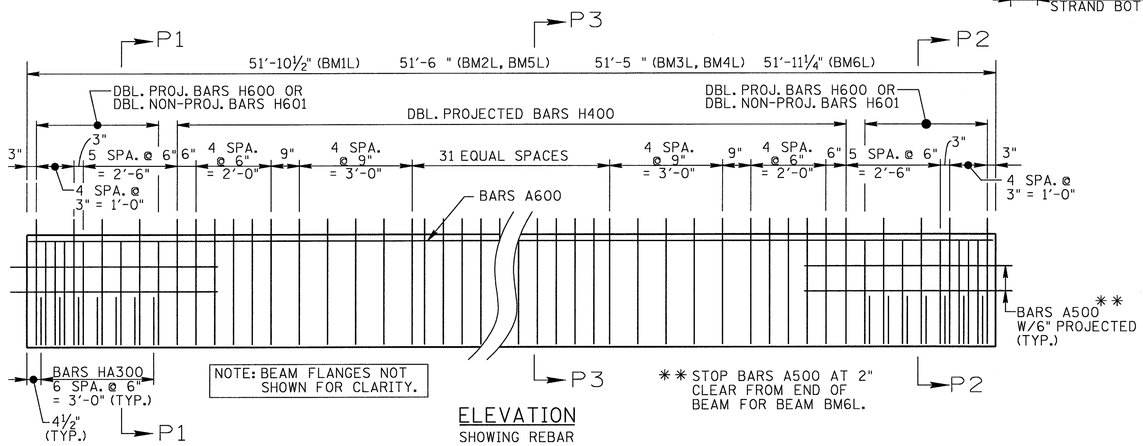

ELEVATION

SHOWING REBAR

BEAM NOTES:

NOTE: SEE STD-14-2 FOR I-BEAM STANDARD DETAILS, NOTES AND REINFORCING.
THE CONCRETE FOR THIS CONSTRUCTION SHALL BE OF SUCH PROPERTIES AS TO ATTAIN A COMPRESSIVE STRENGTH OF NOT LESS THAN 7.500 PSI AT THE AGE OF 28 DAYS AND STRESS TRANSFER SHALL NOT BE MADE TO THE BRIDGE MEMBER UNTIL THE TEST SPECIMENS INDICATE THAT THE CONCRETE HAS REACHED A COMPRESSIVE STRENGTH OF AT LEAST 6,000 PSI. SEE GENERAL NOTES FOR CONCRETE FINISHING NOTE.
ALL BEAMS ARE AASHTO - PCI STANDARD TYPE II.
ALL PRESTRESSING STRANDS TO BE ½" DIA. ASTM GRADE 270K, 7 WIRE UNCOATED STRESS RELIEVED LOW RELAXATION PRESTRESSING STRANDS.
AN INITIAL FORCE OF 31,000 LBS. SHALL BE APPLIED TO EACH STRAND IN ALL BEAMS. A=0.153 IN PER STRAND.
PRESTRESSED BEAM DESIGN DATA - PER BEAM

LIVE LOAD DISTRIBUTION FACTORS:
LLDF MOMENT=0.548 TRUCK/BEAM
LLDF SHEAR=0.716 TRUCK/BEAM
COMPOSITE DEAD LOADS:
DC=.431 LBS/FT PER BEAM
DW=.167 LBS/FT PER BEAM
COMPOSITE SLAB DESIGN STRENGTH:
f'c=3000 P.S.I.

NOTE: DOWNWARD DEFLECTION UNDER TOTAL DL IS NOT ALLOWED.

PROJECT NO.	YEAR	SHEET NO.
16003-4241-04	2013	

REVISIONS

NO.	DATE	BY	BRIEF DESCRIPTION

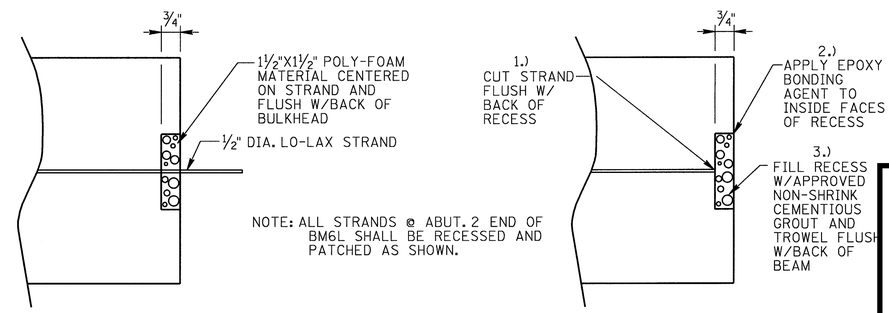

ELEVATION @ RECESS FORM

ELEVATION @ RECESS PATCH

RECESS FORMING & PATCHING DETAIL

@ ABUTMENT END OF BM6L ONLY

UNOFFICIAL SET

NOT FOR BIDDING

SPECIAL NOTE:

NOTE: IN ADDITION TO THE COST OF ELASTROMERIC BEARING PADS AND RUBBER BONDING CEMENT, THE COSTS OF RECESS FORMING AND PATCHING AND ¾" DIAMETER X 5" PREFORMED HOLES SHALL BE INCLUDED IN THE COST OF PRESTRESSED BEAMS.

BEARING PAD NOTES:

SEE TDOT STANDARD SHEET NO. STD-14-2 FOR ELASTOMERIC BEARING PAD DETAILS WITH THE FOLLOWING EXCEPTIONS:
PROVIDE 1" THICK X 6" X 18" ELASTOMERIC PADS AT THE FOLLOWING LOCATIONS.
BM3L - END OF BEAM
BM4L - BEGINNING OF BEAM
BM6L - END OF BEAM

BILL OF STEEL

(PER BEAM) BM1L

BAR	SIZE	NO. REQ'D.	LENGTH
A500	5	4	5'-6"
A600	6	3	51'-6"
H400	4	104	3'-7"
H600	6	16	3'-7"
H601	6	24	3'-0"
HA300	3	14	2'-11"

(PER BEAM) BM2L&BM5L

BAR	SIZE	NO. REQ'D.	LENGTH
A500	5	4	5'-6"
A600	6	3	51'-2"
H400	4	104	3'-7"
H600	6	16	3'-7"
H601	6	24	3'-0"
HA300	3	14	2'-11"

(PER BEAM) BM3L&BM4L

BAR	SIZE	NO. REQ'D.	LENGTH
A500	5	4	5'-6"
A600	6	3	51'-1"
H400	4	104	3'-7"
H600	6	16	3'-7"
H601	6	24	3'-0"
HA300	3	14	2'-11"

(PER BEAM) BM6L

BAR	SIZE	NO. REQ'D.	LENGTH
A500	5	4	5'-6"
A600	6	3	51'-7"
H400	4	104	3'-7"
H600	6	16	3'-7"
H601	6	24	3'-0"
HA300	3	14	2'-11"

ESTIMATED QUANTITIES PER BEAM

ITEM	NO. REQ'D.	CLASS 'A' CONCRETE C.Y.	STEEL BAR REINFORCING LB.	PRESTRESSING STRANDS (LOW RELAXATION) LB.
BM1L	1	4.9	713	335
BM2L	1	4.9	712	333
BM3L	1	4.9	712	332
BM4L	1	4.9	712	332
BM5L	1	4.9	712	333
BM6L	1	4.9	713	336

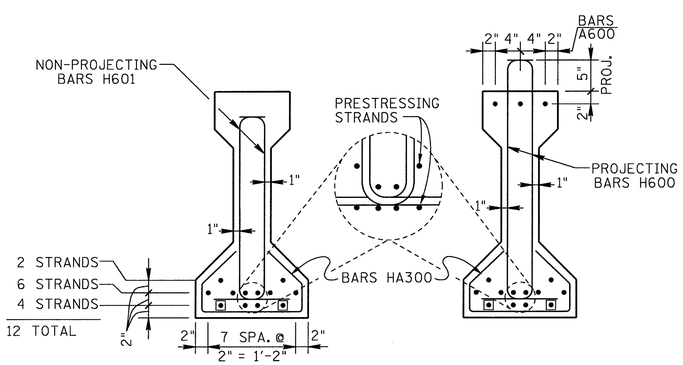

SECTION P1-P1

(SHOWING PRESTRESSING STRANDS)
12 STRANDS

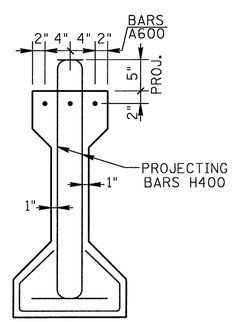

SECTION P2-P2

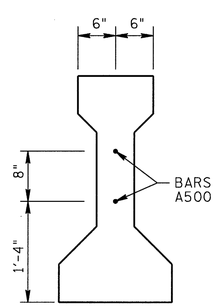

END SECTION

(SHOWING BARS A500)

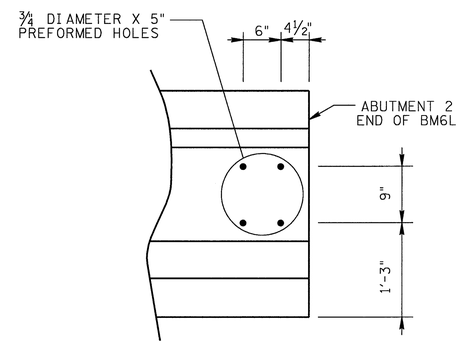

DETAIL "X"

(AT END OF BM6L ONLY)

SECTION P3-P3

▣ = DEBOND 6'-0"

DESIGNED BY	WAP	DATE	7-12
DRAWN BY	MLP	DATE	7-12
SUPERVISED BY	WAP	DATE	7-12
CHECKED BY	JCP	DATE	8-12

STATE OF TENNESSEE
DEPARTMENT OF TRANSPORTATION
BUREAU OF HIGHWAYS

PRESTRESSED BEAMS
LEFT LANE BRIDGE
STATE ROUTE 2
OVER
LITTLE DUCK RIVER
BRIDGE NO. 16-SR002-13.68
COFFEE COUNTY
2013

BR-114-69

PROJECT NO.	YEAR	SHEET NO.
16003-4241-04	2013	

REVISIONS

NO.	DATE	BY	BRIEF DESCRIPTION

NOTE: RISER BLOCKS TO BE POURED MONOLITHICALLY WITH ABUTMENT BEAM.

NOTE: ELASTOMERIC PADS SHALL BE IN PLACE A MINIMUM OF ONE DAY BEFORE BEING DISTURBED BY SETTING BEAMS. PLACE RUBBER BONDING CEMENT IN SUCH A WAY THAT VISIBLE CONCRETE SURFACES WILL NOT BE STAINED.

NOTE: ALL COST TO CONSTRUCT RISER BLOCKS SHALL BE INCLUDED IN ITEM NO. 604-03.01, CLASS "A" CONCRETE (BRIDGES), C.Y.

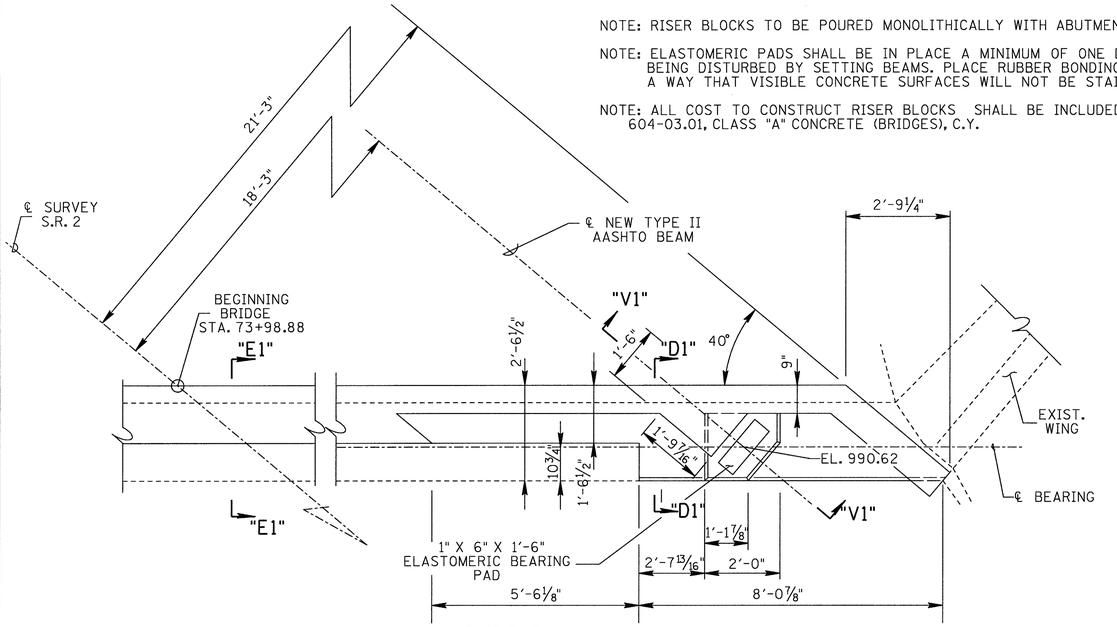

PART-PLAN

ABUTMENT NO. 1

FOR SECTION "D1"-"D1" & "E1"-"E1" SEE BR-114-67

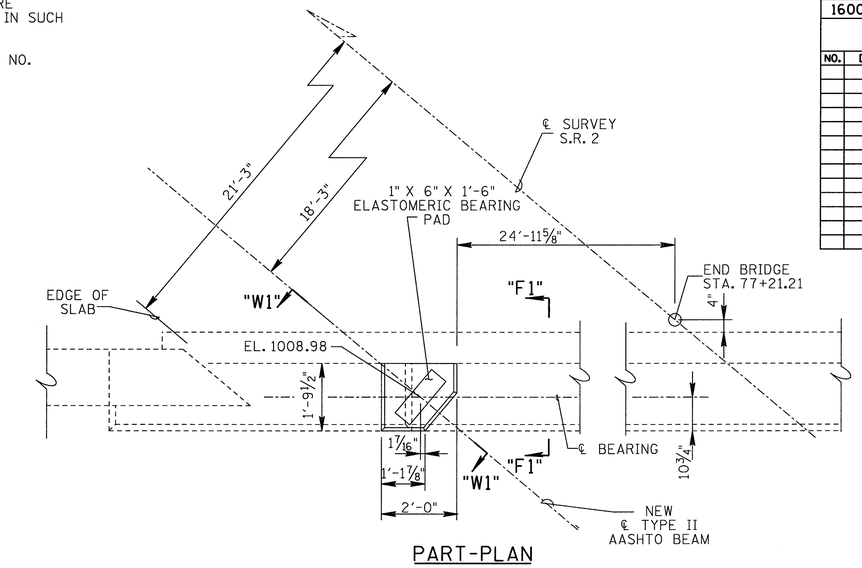

PART-PLAN

SHOWING RISER BLOCK ABUTMENT NO. 2

FOR SECTION "F"-"F" SEE BR-114-67A

NOTE: EXISTING REINFORCING STEEL PROTRUDING FROM DEMOLITION LIMITS OF REMAINING ABUTMENT SHALL BE THOROUGHLY INSPECTED, COMPLETELY CLEANED AND INCORPORATED INTO NEW SLAB CONSTRUCTION AS PRACTICABLE. MINIMUM CONCRETE COVER OF 2" SHALL BE MAINTAINED ON ALL EXISTING REINFORCING STEEL INCORPORATED INTO NEW CONSTRUCTION.

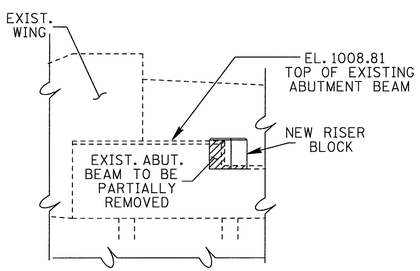

PART-ELEVATION

LOOKING FORWARD AT ABUTMENT NO. 2

SHOWING BENCH MARK

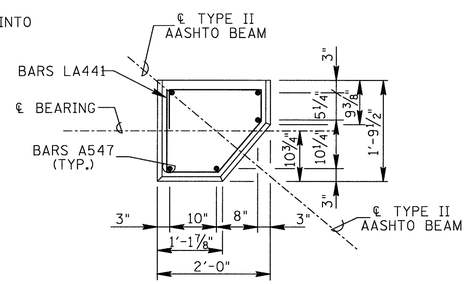

PLAN

SHOWING RISER BLOCK REINFORCEMENT

LEFT LANE ABUTMENT NO. 1 & NO. 2

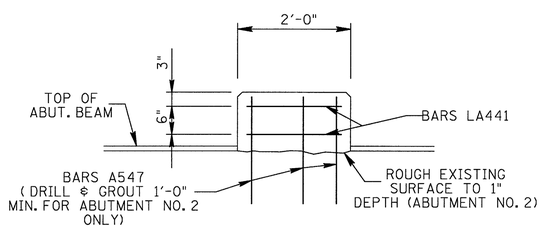

ELEVATION

SHOWING RISER BLOCK REINFORCEMENT

LEFT LANE ABUTMENT NO. 1 & NO. 2

NOTE: COST OF EPOXY GROUT TO BE INCLUDED IN BID ITEMS.

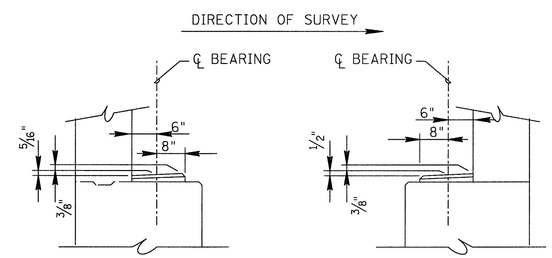

SECTION "V1-V1"

ABUTMENT NO. 1

SECTION "W1-W1"

ABUTMENT NO. 2

NOTE: RISER BLOCK BEARING SURFACE TO COMFORM TO BOTTOM OF BEAM GRADE.

UNOFFICIAL SET

NOT FOR BIDDING

STATE OF TENNESSEE
DEPARTMENT OF TRANSPORTATION
BUREAU OF HIGHWAYS

LEFT LANE ABUTMENT DETAILS
STATE ROUTE 2
OVER
LITTLE DUCK RIVER
BRIDGE NO. 16-SR002-13.68
COFFEE COUNTY
2013

DESIGNED BY	JCP	DATE	JULY 2012
DRAWN BY	MP	DATE	JULY 2012
SUPERVISED BY	WAP	DATE	JULY 2012
CHECKED BY	WAP	DATE	JULY 2012

BR-114-70

PROJECT NO.	YEAR	SHEET NO.
16003-4241-04	2013	

REVISIONS

NO.	DATE	BY	BRIEF DESCRIPTION

NOTE: RISER BLOCKS TO BE POURED MONOLITHICALLY WITH PIER CAP.

NOTE: ELASTOMERIC PADS SHALL BE IN PLACE A MINIMUM OF ONE DAY BEFORE BEING DISTURBED BY SETTING BEAMS. PLACE RUBBER BONDING CEMENT IN SUCH A WAY THAT VISIBLE CONCRETE SURFACES WILL NOT BE STAINED.

NOTE: ALL COST TO CONSTRUCT RISER BLOCKS SHALL BE INCLUDED IN ITEM NO. 604-03.01, CLASS "A" CONCRETE (BRIDGES), C.Y.

NOTE: EXISTING REINFORCING STEEL PROTRUDING FROM DEMOLITION LIMITS OF REMAINING PIER CAP SHALL BE THOROUGHLY INSPECTED, COMPLETELY CLEANED AND INCORPORATED INTO NEW SLAB CONSTRUCTION AS PRACTICABLE. MINIMUM CONCRETE COVER OF 2" SHALL BE MAINTAINED ON ALL EXISTING REINFORCING STEEL INCORPORATED INTO NEW CONSTRUCTION.

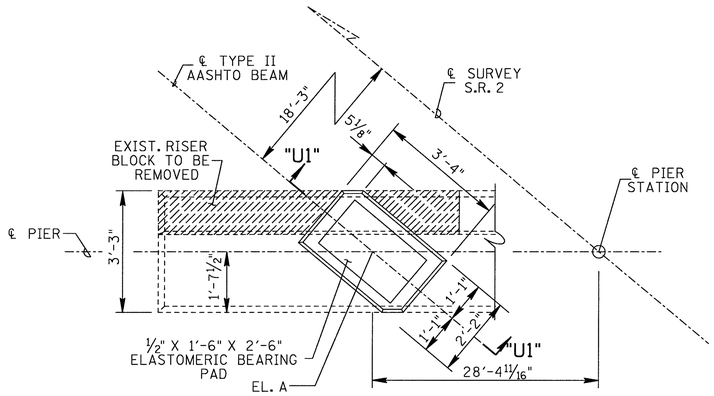

PART-PLAN

SHOWN TYP. AT PIERS NO. 1, 2, 4, & 5
SIMILAR AT PIER NO. 3 (SEE RISER BLOCK DETAIL THIS SHEET)

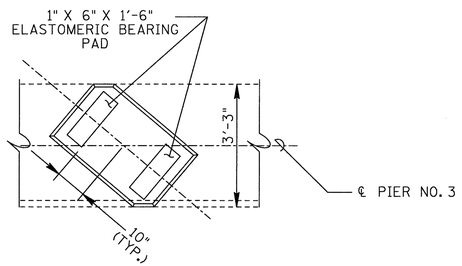

DETAIL

SHOWING RISER BLOCK PLAN
FOR AT PIER NO. 3

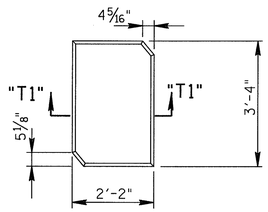

PLAN

SHOWING TYPICAL RISER BLOCK
FOR LEFT LANE PIERS

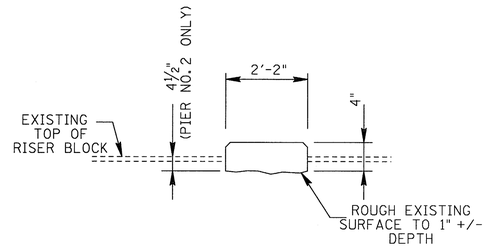

SECTION "T1"-"T1"

TYPICAL RISER BLOCK AS
SHOWN FOR EACH PIER

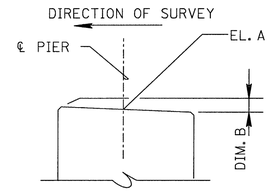

SECTION "U1-U1"

NOTE: RISER BLOCK BEARING SURFACE
TO COMFORM TO
BOTTOM OF BEAM GRADE.

RISER ELEVATION TABLE

PIER NO.	℄ PIER STA.	EL. A	DIM. B
1	STA. 74+53.56	993.23	1 13/16"
2	STA. 75+00.56	995.99	2 1/8"
3	STA. 75+59.56	999.49	2 5/16"
4	STA. 76+12.56	1002.71	2 3/16
5	STA. 76+65.56	1005.89	2 3/16"

UNOFFICIAL SET

NOT FOR BIDDING

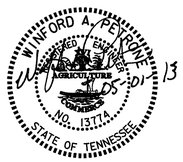

STATE OF TENNESSEE
DEPARTMENT OF TRANSPORTATION
BUREAU OF HIGHWAYS

LEFT LANE PIER DETAILS
STATE ROUTE 2
OVER
LITTLE DUCK RIVER
BRIDGE NO. 16-SR002-13.68
COFFEE COUNTY
2013

DESIGNED BY	JCP	DATE	JULY 2012
DRAWN BY	MP	DATE	JULY 2012
SUPERVISED BY	WAP	DATE	JULY 2012
CHECKED BY	WAP	DATE	JULY 2012

BR-114-70A

PROJECT NO.	YEAR	SHEET NO.
16003-4241-04	2013	

REVISIONS

DATE	BY	BRIEF DESCRIPTION

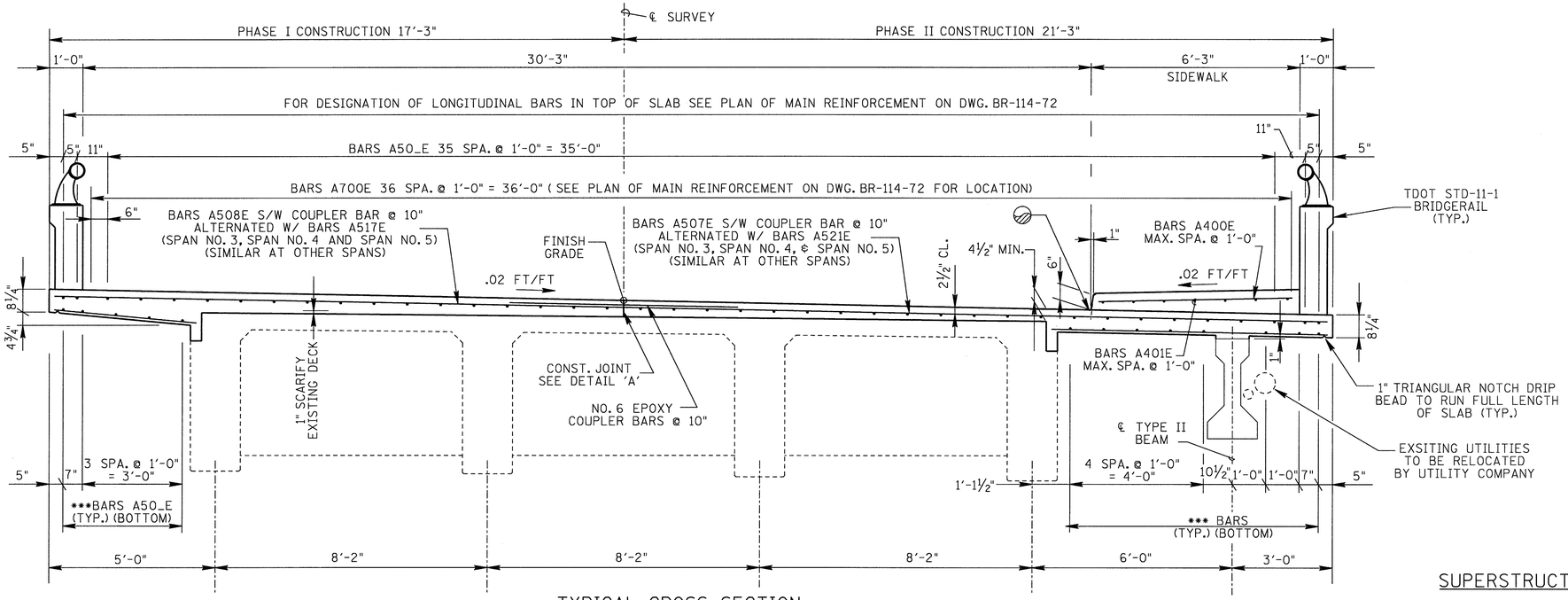

TYPICAL CROSS SECTION

LOOKING FORWARD ON SURVEY

*** BARS A500E S/W BARS A500E S/W BARS A500E S/W BARS A500E S/W BARS A500E S/W BARS A501E OR BARS A502E OR BARS A503E OR BARS A504E OR BARS A505E OR BARS A506E SIMILAR AS SHOWN ON DWG. BR-114-72 MAIN REINFOCEMENT PLAN

DENOTES: SEAL CONSTRUCTION JOINTS WITH CRACK SEALER AND PAID FOR UNDER ITEM NO. 617-02 AND 617-05

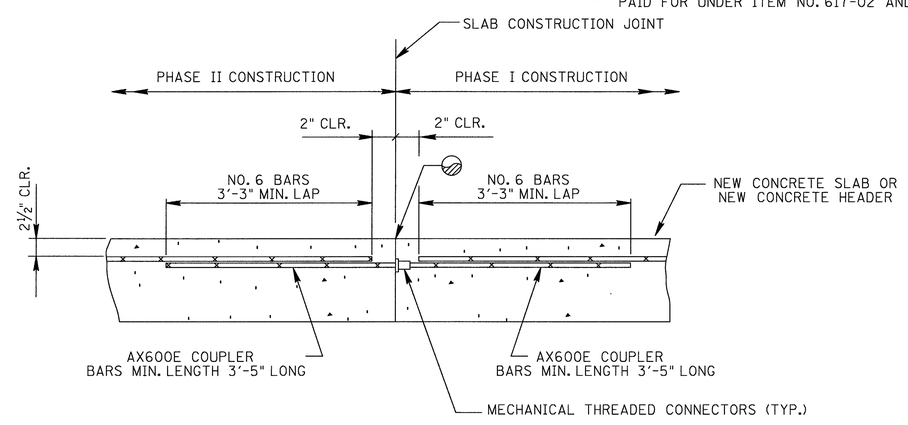

DENOTES: SEAL CONSTRUCTION JOINTS WITH CRACK SEALER AND PAID FOR UNDER ITEM NO. 617-02 AND 617-05

DETAIL 'A'

SHOWING TRANSVERSE REINFORCING STEEL SPLICING WITH MECHANICAL THREADED CONNECTORS

COST OF MECHANICAL THREADED CONNECTORS WITH COUPLER BARS WITHIN THE NEW CONCRETE SLAB SHALL BE PAID FOR IN ITEM NO. 604-02.03, EPOXY COATED REINFORCING STEEL.

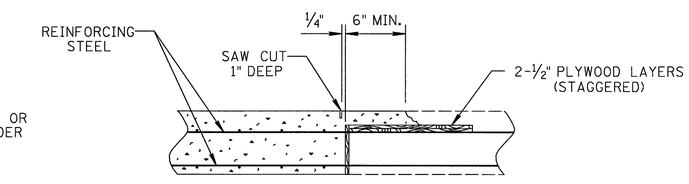

SLAB CONSTRUCTION JOINT DETAIL

NOTE: SLAB CONSTRUCTION JOINTS MAY BE LOCATED AT THE CONTRACTOR'S OPTION EXCEPT NO JOINT MAY BE LOCATED CLOSER THAN 1/5 SPAN LENGTH FROM AN INTERIOR SUPPORT. THE CONTRACTOR SHALL MAKE ADEQUATE PROVISIONS DURING PLACEMENT OF SLAB TO PREVENT THE EXTERIOR BEAM FROM TWISTING. NO EQUIPMENT SHALL BE PERMITTED ON THE BRIDGE UNTIL ALL POURS ARE MADE AND THE CONCRETE IS PROPERLY CURED. ALL SLAB CONSTRUCTION JOINTS SHALL BE IN ACCORDANCE WITH THE SLAB CONSTRUCTION JOINT DETAIL SHOWN ABOVE.

SUPERSTRUCTURE NOTES:

NOTE: NO PORTION OF THE PARAPET SHALL BE POURED UNTIL THE ENTIRE DECK SLAB HAS BEEN POURED AND ALL SUPERSTUCTURE FALSEWORK HAS BEEN REMOVED.

NOTE: THE CONTRACTOR IS SOLELY RESPONSIBLE FOR SUPPORTING THE BEAMS TO PREVENT DAMAGE DUE TO TWISTING OR OVERTURNING DURING ALL PHASES OF CONSTRUCTION. IT IS STRONGLY RECOMMENDED THAT TEMPORARY ERECTION DIAPHRAGMS MUST BE INSTALLED PRIOR TO PLACING ANY LOADS ON THE BEAMS, HOWEVER, ERECTION DIAPHRAGMS MUST BE IN PLACE IN THE SPAN AT THE TIME THE SLAB IS POURED IN SAID SPAN.

NOTE: WHEN POURING SLAB, PROVISIONS SHALL BE MADE FOR SETTING REINFORCING STEEL FOR PARAPET. THE PARAPET SHALL NOT BE POURED UNTIL THE SLAB IS POURED AND CURED. SEE STANDARD DRAWING NO. STD-11-1 FOR PARAPET.

NOTE: THE SUPPORT DIAPHRAGMS AT THE PIER SHALL BE FORMED AND THE BOTTOM 15 INCHES POURED AS SOON AS POSSIBLE AFTER THE BEAMS HAVE BEEN SET. THE REMAINDER OF THE DIAPHRAGM SHALL BE POURED CONCURRENTLY WITH THE DECK SLAB. ALL DIAPHRAGM CONCRETE SHALL BE INCLUDED IN THE QUANTITY FOR ITEM NO. 604-03.09, CLASS "D" CONCRETE (BRIDGE DECK), C.Y.

NOTE: EXISTING REINFORCING STEEL PROTRUDING FROM DEMOLITION LIMITS OF REMAINING SLAB AND BEAM SHALL BE THOROUGHLY INSPECTED, COMPLETELY CLEANED AND INCORPORATED INTO NEW SLAB CONSTRUCTION. MINIMUM CONCRETE COVER OF 2" SHALL BE MAINTAINED ON ALL EXISTING REINFORCING STEEL INCORPORATED INTO NEW CONSTRUCTION.

NOTE: ALL COSTS ASSOCIATED WITH THE NEW 8¼" CONCRETE DECK SLAB, NEW CONCRETE CANTILEVERS AND PLACING THE CONCRETE FOR 4½" MIN. CONCRETE OVERLAY SHALL BE PAID FOR UNDER ITEM NO. 604-03.09, CLASS "D" CONCRETE (BRIDGE DECK), CY.

NOTE : COST OF EPOXY COATED REINFORCING STEEL INCLUDING MECHANICAL THREADED CONNECTORS SHALL BE PAID FOR UNDER ITEM NO. 604-02.03, EPOXY COATED REINFORCING STEEL, LBS. SEE BILL OF STEEL AND BAR BENDS ON DWG NO. BR-XXX-XX.

UNOFFICIAL SET

NOT FOR BIDDING

ESTIMATED QUANTITIES- RIGHT LANE BRIDGE			
ITEM NO. 604-03.09	ITEM NO. 604-03.01	ITEM NO. 604-02.03	ITEM NO. 604-03.02
CLASS "D" CONCRETE C.Y.	CLASS "A" CONCRETE C.Y.	EPOXY COATED REINFORCING STEEL LBS.	REINFORCING STEEL LBS.
342	8	61720	3635

STATE OF TENNESSEE
DEPARTMENT OF TRANSPORTATION
BUREAU OF HIGHWAYS

SUPERSTRUCTURE CROSS SECTION
RIGHT LANE BRIDGE
STATE ROUTE 2
OVER
LITTLE DUCK RIVER
BRIDGE NO. 16-SR002-16.68
COFFEE COUNTY
2013

DESIGNED BY	JCP	DATE	JULY 2012
DRAWN BY	MP	DATE	JULY 2012
SUPERVISED BY	WAP	DATE	JULY 2012
CHECKED BY	WAP	DATE	JULY 2012

BR-114-71

PROJECT NO.	YEAR	SHEET NO.
16003-4241-04	2013	

REVISIONS

DATE	BY	BRIEF DESCRIPTION

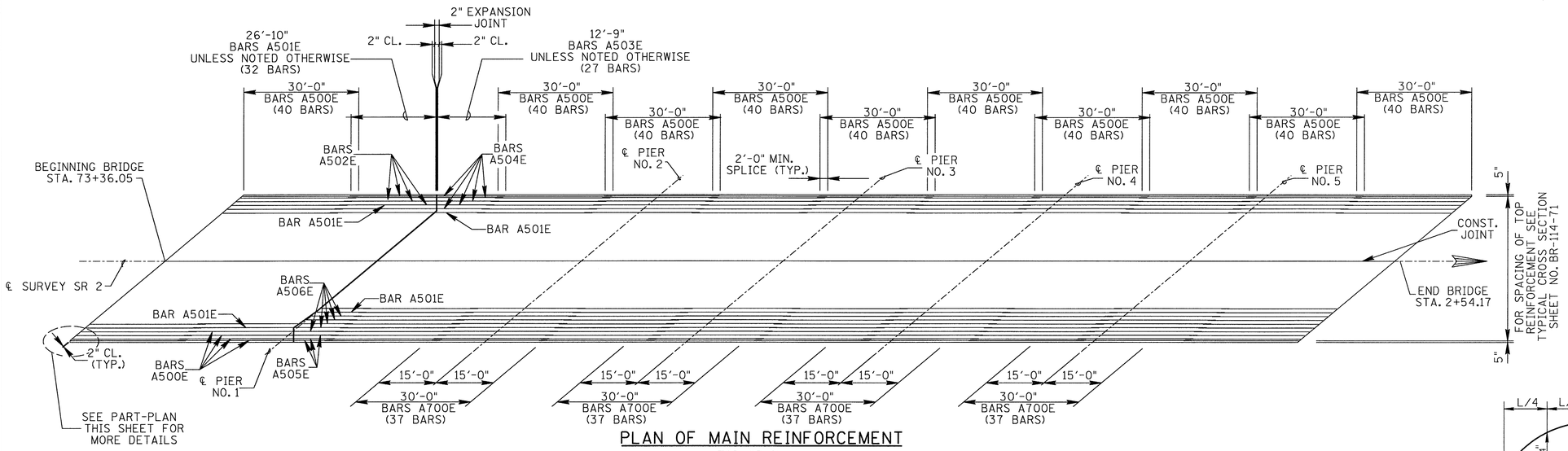

PLAN OF MAIN REINFORCEMENT

TOP OF SLAB

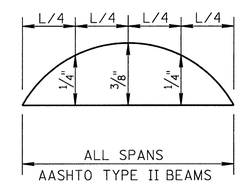

DEAD LOAD CORRECTION CURVE

DEAD LOAD CORRECTION CURVE: THIS CURVE IS FOR DEAD LOAD SLAB AND ALL DEAD LOADS THAT ARE APPLIED AFTER SLAB IS IN PLACE AND SHOULD BE CORRECTED TO COMPENSATE FOR EFFECTS DUE TO VERTICAL CURVE. IF PRESTRESSED DECK PANELS ARE USED AND THE BEAMS ARE PROFILED AFTER PANELS ARE IN PLACE, REDUCE THE DEAD LOAD CORRECTION VALUES SHOWN BY 25%.

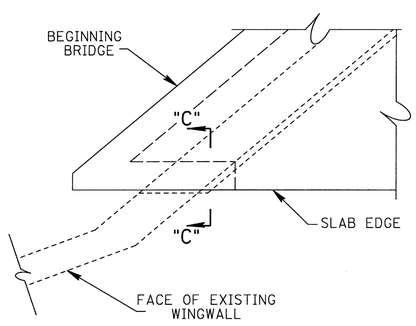

PART- PLAN OF BRIDGE DECK

SHOWING DECK SLAB TURNDOWN

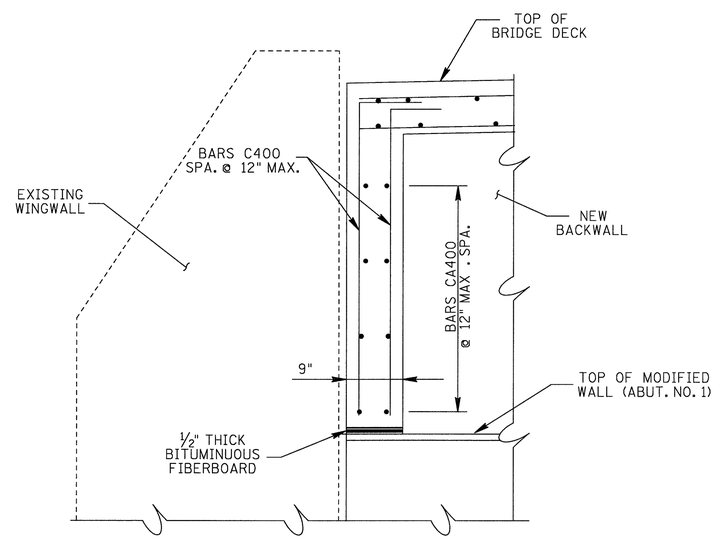

SECTION "C"-"C"

SHOWING REINFORCEMENT FOR SLAB TURNDOWN ONLY

UNOFFICIAL SET

NOT FOR BIDDING

STATE OF TENNESSEE
DEPARTMENT OF TRANSPORTATION
BUREAU OF HIGHWAYS

SLAB PLAN
RIGHT LANE BRIDGE
STATE ROUTE 2
OVER
LITTLE DUCK RIVER
BRIDGE NO. 16-SR002-13.68
COFFEE COUNTY
2013

DESIGNED BY	JCP	DATE	JULY 2012
DRAWN BY	MP	DATE	JULY 2012
SUPERVISED BY	WAP	DATE	JULY 2012
CHECKED BY	WAP	DATE	JULY 2012

PROJECT NO.	YEAR	SHEET NO.
16003-4241-04	2013	

REVISIONS

DATE	BY	BRIEF DESCRIPTION

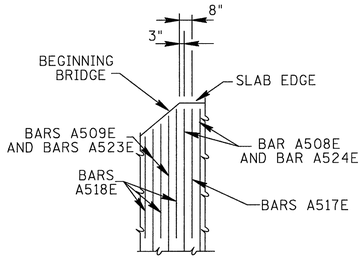

DETAIL "D2"

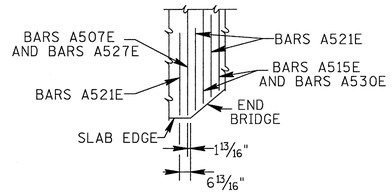

DETAIL "E2"

Ⓐ DENOTES: BARS A508 S/W COUPLER S/W SERIES BARS A510E 19 SPA. @ 10" = 15'-10"

Ⓑ DENOTES: SERIES BARS A508E S/W COUPLER* 5 SPA. @ 10" = 4'-2"

Ⓒ DENOTES: SERIES BARS A511E 17 SPA. @ 10" = 14'-2"

Ⓓ DENOTES: SERIES BARS A525E 3 SPA. @ 10" = 2'-6"

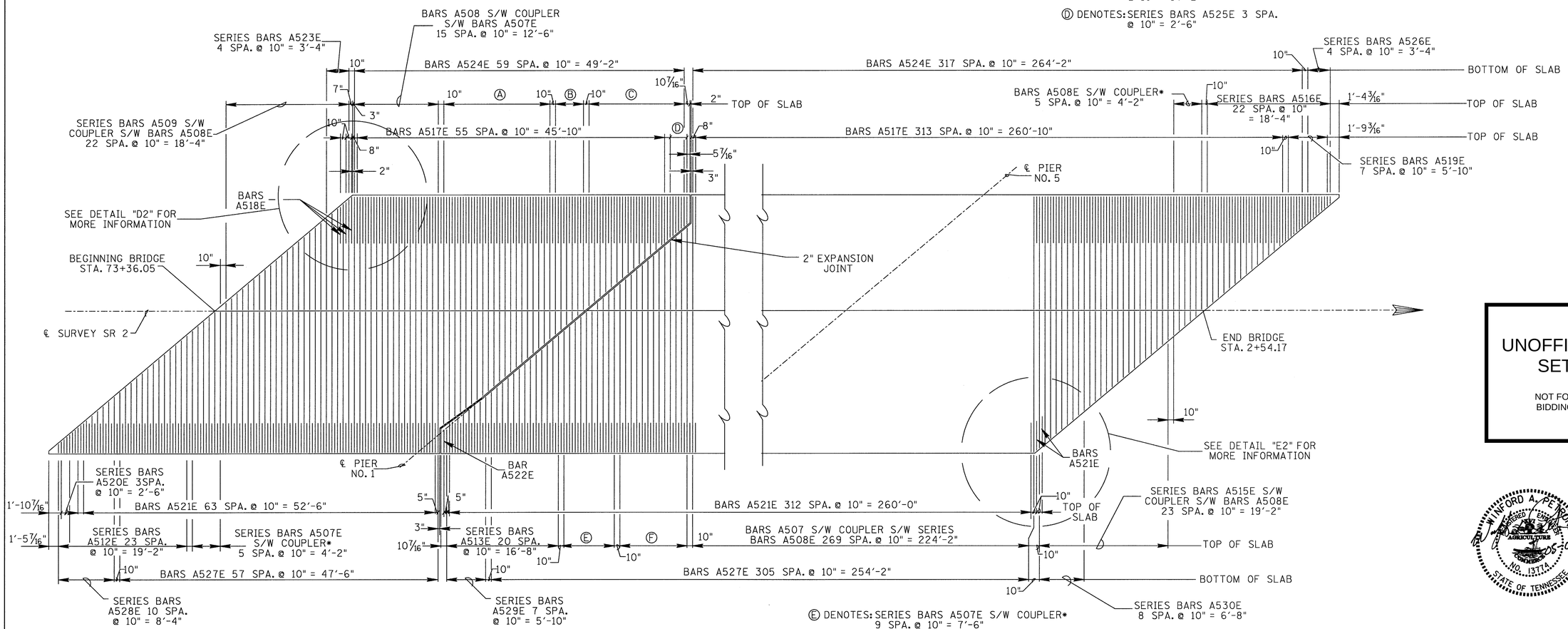

* DENOTES CUT TO FIT NO. 6 COUPLER BAR

Ⓔ DENOTES: SERIES BARS A507E S/W COUPLER* 9 SPA. @ 10" = 7'-6"

Ⓕ DENOTES: BARS A507 S/W COUPLER S/W SERIES BARS A514E 12 SPA. @ 10" = 10'-0"

SLAB PLAN

SHOWING TRANSVERSE REINFORCEMENT

UNOFFICIAL SET

NOT FOR BIDDING

STATE OF TENNESSEE
DEPARTMENT OF TRANSPORTATION
BUREAU OF HIGHWAYS

SLAB PLAN DETAILS
RIGHT LANE BRIDGE
STATE ROUTE 2
OVER
LITTLE DUCK RIVER
BRIDGE NO. 16-SR002-13.68
COFFEE COUNTY
2013

DESIGNED BY	JCP	DATE	JULY 2012
DRAWN BY	MP	DATE	JULY 2012
SUPERVISED BY	WAP	DATE	JULY 2012
CHECKED BY	WAP	DATE	JULY 2012

BR-114-72A

PROJECT NO.	YEAR	SHEET NO.
16003-4241-04	2013	

REVISIONS

DATE	BY	BRIEF DESCRIPTION

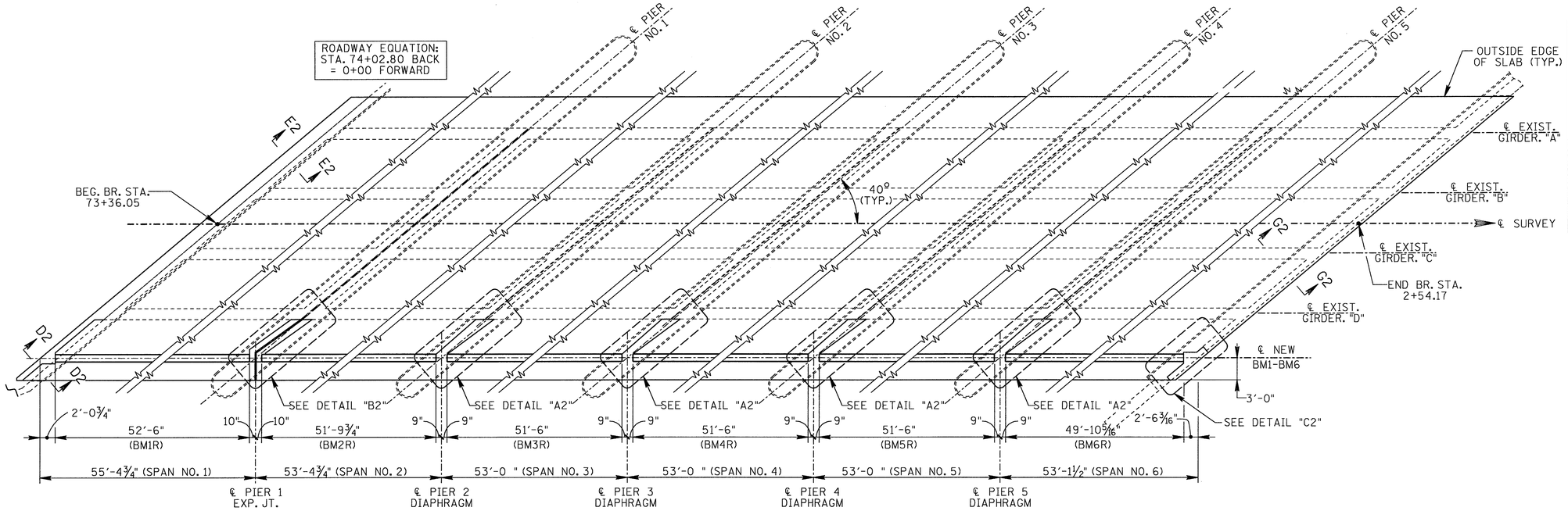

FRAMING PLAN: RIGHT LANE BRIDGE

NOTE: DEMOLISH TOP OF EXISTING ABUTMENT AS SHOWN. CLEAN AND STRAIGHTEN EXISTING REINFORCEMENT AND INCORPORATE INTO NEW CONSTRUCTION.

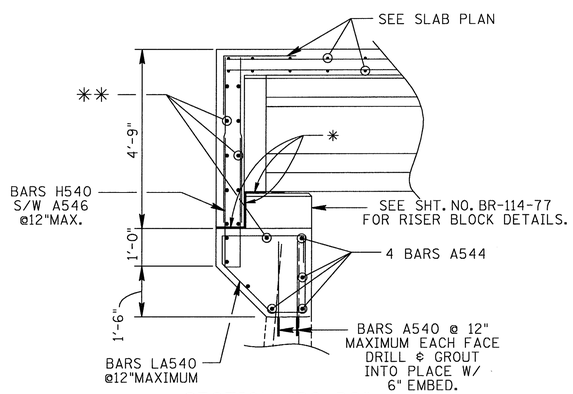

SECTION "D2-D2"

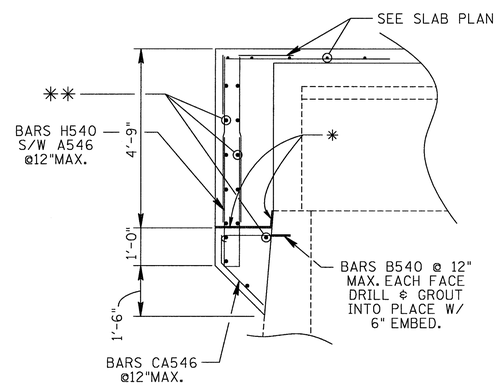

SECTION "E2-E2"

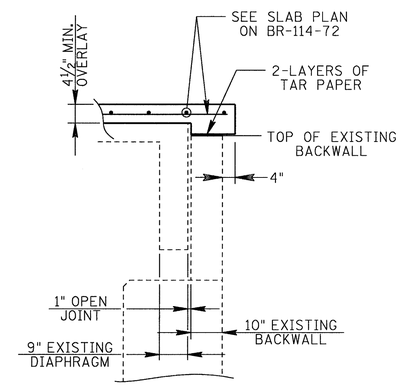

SECTION "G2-G2"

*: INDICATES ½" THK. BIT. FIBERBOARD

**: INDICATES BARS A542 (PHASE 1) S/W NO. 6 COUPLER BARS S/W BARS A543 (PHASE 2) @ 12" MAX. (TYP.)

UNOFFICIAL SET

NOT FOR BIDDING

STATE OF TENNESSEE
DEPARTMENT OF TRANSPORTATION
BUREAU OF HIGHWAYS

FRAMING PLAN AND DETAILS
RIGHT LANE BRIDGE
STATE ROUTE 2
OVER

BRIDGE NO. 16-SR002-13.68
COFFEE COUNTY
2013

DESIGNED BY	WAP	DATE	JULY 2012
DRAWN BY	MP	DATE	JULY 2012
SUPERVISED BY	WAP	DATE	JULY 2012
CHECKED BY	WAP	DATE	JULY 2012

BR-114-73

PROJECT NO.	YEAR	SHEET NO.
16003-4241-04	2013	

REVISIONS

DATE	BY	BRIEF DESCRIPTION

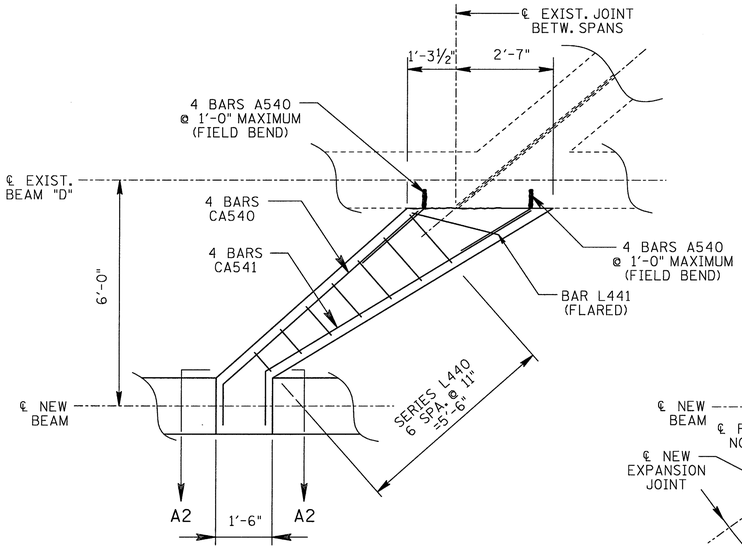

DETAIL "A2"

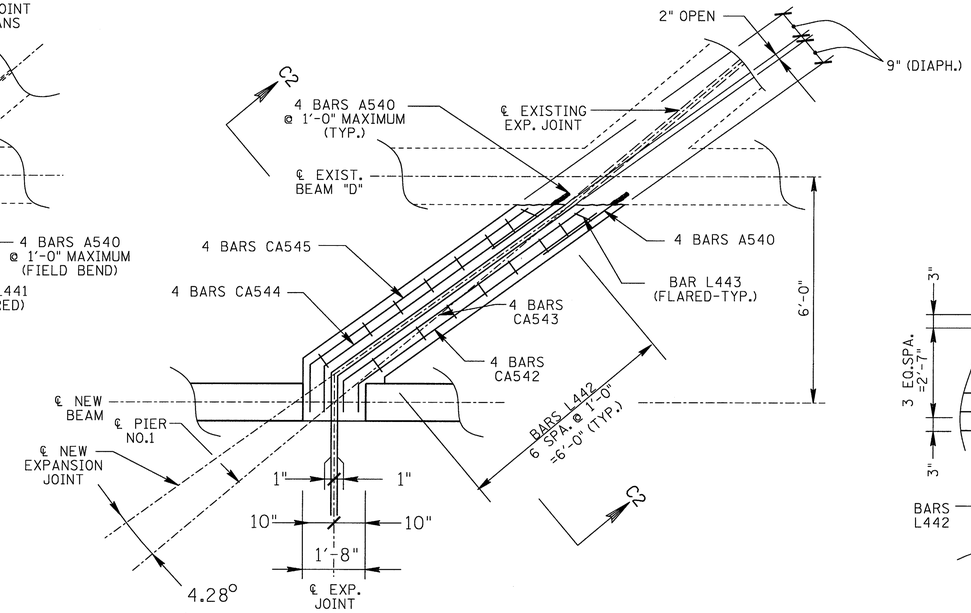

DETAIL "B2"

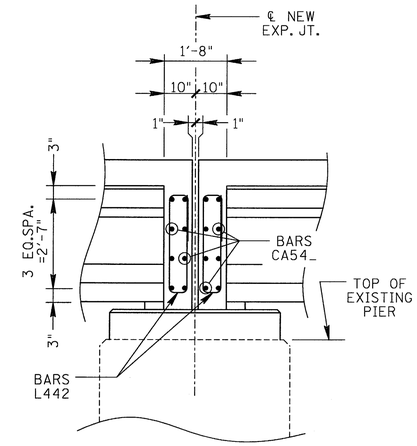

SECTION "C2-C2"

✱✱ : USE 1" DIA. SWEDGED ANCHOR BOLT IN LIEU OF HOOKED ANCHOR AS INDICATED ON STD-6-1. DRILL HOLE ⅛" DIAMETER LARGER THAN BOLT, AND ANCHOR WITH APPROVED EPOXY ADHESIVE FROM THE CURRENT STATE OF TENNESSEE QUALIFIED PRODUCTS LIST.

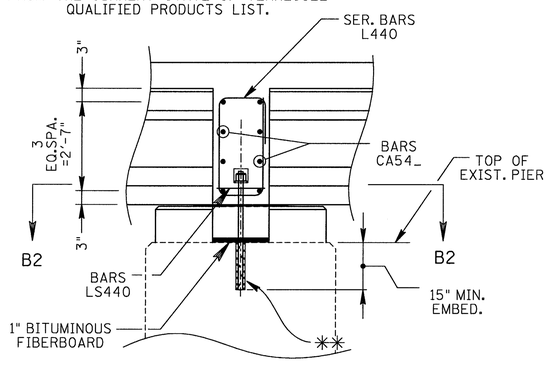

SECTION "A2-A2"

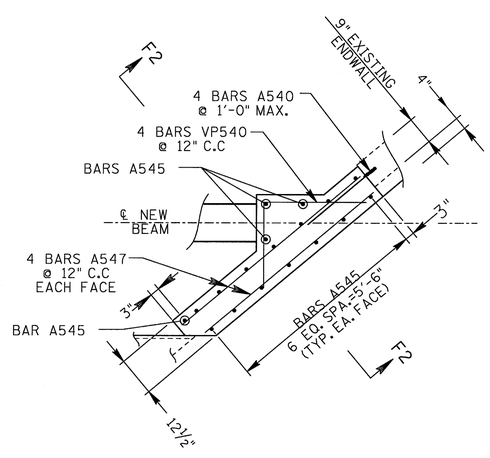

DETAIL "C2"

✱: INDICATES ½" THK. BIT. FIBERBOARD

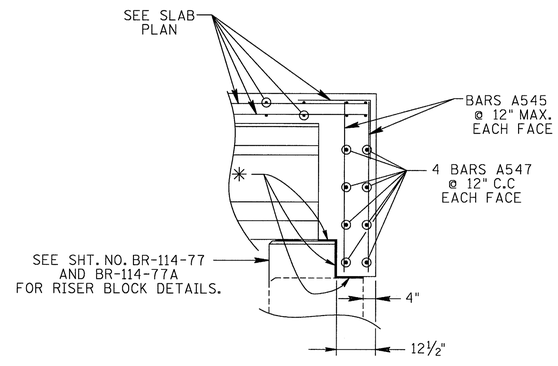

SECTION "F2-F2"

UNOFFICIAL SET

NOT FOR BIDDING

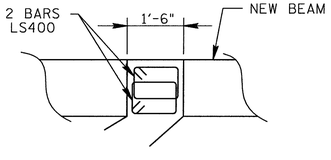

SECTION "B2-B2"

DESIGNED BY	WAP	DATE	JULY 2012
DRAWN BY	MP	DATE	JULY 2012
SUPERVISED BY	WAP	DATE	JULY 2012
CHECKED BY	WAP	DATE	JULY 2012

STATE OF TENNESSEE
DEPARTMENT OF TRANSPORTATION
BUREAU OF HIGHWAYS

FRAMING PLAN DETAILS
RIGHT LANE BRIDGE
STATE ROUTE 2
OVER

BRIDGE NO. 16-SR002-13.68
COFFEE COUNTY
2013

BR-114-73A

PROJECT NO.	YEAR	SHEET NO.
16003-4241-04	2013	

REVISIONS

DATE	BY	BRIEF DESCRIPTION

BILL OF STEEL

E DENOTES EPOXY BARS

BAR	LOCATION	SIZE	NO. REQ'D	BENDING DIMENSIONS A	B	C	D	LENGTH
A400E	SIDEWALK	4	321					5'-11"
A401E	SIDEWALK	4	84					30'-0"
A500E	SLAB	5	538					30'-0"
A501E	SLAB	5	37					26'-10"
A502E	SLAB	5	8					25'-2"
A503E	SLAB	5	27					12'-9"
A504E	SLAB	5	10					17'-6"
A505E	SLAB	5	6					11'-6"
A506E	SLAB	5	10					13'-5"
A507E	SLAB	5	338					20'-11"
A508E	SLAB	5	336					16'-11"
SERIES								
A509E	SLAB	5	1	*				210'-10"
				* DIM. VARIES FROM 1'-0 " TO 16'-4" BY INC. OF 8 3/8" (23 BARS TOTAL)				
SERIES								
A510E	SLAB	5	1	*				206'-8"
				* DIM. VARIES FROM 4'-0 " TO 16'-8" BY INC. OF 8" (20 BARS TOTAL)				
SERIES								
A511E	SLAB	5	1	*				185'-9"
				* DIM. VARIES FROM 4-4 5/8" TO16'-3" BY INC. OF 8 3/8" (18 BARS TOTAL)				
SERIES								
A512E	SLAB	5	1	*				223'-3"
				* DIM. VARIES FROM 1'-3 1/4" TO 17'-4" BY INC. OF 8 3/8" (24 BARS TOTAL)				
SERIES								
A513E	SLAB	5	1	*				216'-1"
				* DIM. VARIES FROM 3-4 " TO 17'-3" BY INC. OF 8 3/8" (21 BARS TOTAL)				
SERIES								
A514E	SLAB	5	1	*				103'-2"
				* DIM. VARIES FROM 3'-9" TO 12'-1 1/2" BY INC. OF 8 3/8" (13 BARS TOTAL)				
SERIES								
A515E	SLAB	5	1	*				295'-0"
				* DIM. VARIES FROM 4'-2 3/4" TO 20'-4" BY INC. OF 8 3/8" (24 BARS TOTAL)				
SERIES								
A516E	SLAB	5	1	*				199'-7"
				* DIM. VARIES FROM 1'-0" TO 16'-4 1/4" BY INC. OF 8 3/8" (23 BARS TOTAL)				
A517E	SLAB	5	370					6'-10"
A518E	SLAB	5	3					5'-8"

BAR	LOCATION	SIZE	NO. REQ'D	BENDING DIMENSIONS A	B	C	D	LENGTH
SERIES								
A519E	SLAB	5	1	*				30'-6"
				* DIM. VARIES FROM 1'-4 3/8" TO 6'-3" BY INC. OF 8 3/8" (8 BARS TOTAL)				
SERIES								
A520E	SLAB	5	1	*				10'-6"
				* DIM. VARIES FROM 1'-7 " TO 3'-8" BY INC. OF 8 3/8" (4 BARS TOTAL)				
A521E	SLAB	5	377					4'-4"
A522E	SLAB	5	1					3'-4"
SERIES								
A523E	SLAB	5	1	*				12'-0"
				* DIM. VARIES FROM 1'-0" TO 3'-9 1/2" BY INC. OF 8 3/8" (5 BARS TOTAL)				
A524E	SLAB	5	378					4'-3"
SERIES								
A525E	SLAB	5	1	*				19'-10"
				* DIM. VARIES FROM 3'-10 7/8" TO 6'-0" BY INC. OF 8 3/8" (4 BARS TOTAL)				
SERIES								
A526E	SLAB	5	1	*				12'-0"
				* DIM. VARIES FROM 1'-0 " TO 3'-9 1/2" BY INC. OF 8 3/8" (5 BARS TOTAL)				
A527E	SLAB	5	364					8'-3"
SERIES								
A528E	SLAB	5	1	*				52'-2"
				* DIM. VARIES FROM 1'-3 " TO 8'-2 3/4" BY INC. OF 8 3/8" (11 BARS TOTAL)				
SERIES								
A529E	SLAB	5	1	*				46'-0"
				* DIM. VARIES FROM 3'-4 " TO 8'-2 " BY INC. OF 8 5/16" (8 BARS TOTAL)				
SERIES								
A530E	SLAB	5	1	*				43'-2"
				* DIM. VARIES FROM 2'-0" TO 7'-7" BY INC. OF 8 3/8" (9 BARS TOTAL)				
NO. 6	EPOXY COUPLER BAR	6	389					6'-10"
A700E	SLAB	7	148					30'-0"
A540	PIER DIAPH. & ABUT.	5	60					2'-6"
A541	RISER	5	10					1'-10"
A542	ABUT./BACKWALL	5	14					26'-5"
A543	ABUT./BACKWALL	5	14					32'-7"
A544	ABUT./BACKWALL	5	4					7'-9"
A545	ABUT./BACKWALL	5	18					4'-4"
A546	ABUT./BACKWALL	5	118					4'-4"
A547	ABUT./BACKWALL	5	8					5'-11"
B540	ABUT./BACKWALL	5	53	1'-1"				1'-8"

NOTE: SEE SHEET BR-114-68 FOR BAR BENDING DETAILS

BAR	LOCATION	SIZE	NO. REQ'D	BENDING DIMENSIONS A	B	C	D	LENGTH
C400	SLAB	4	4	4'-2"				4'-8"
CA540	PIER DIAPHRAGM	5	16	6'-11"	1'-1"	9 3/4"	8 5/8"	8'-0"
CA541	PIER DIAPHRAGM	5	16	8'-3"	1'-5"	1'-2 1/2"	8 3/4"	9'-8"
CA542	PIER DIAPHRAGM	5	4	7'-9"	9"	7 1/4"	5 1/4"	8'-6"
CA543	PIER DIAPHRAGM	5	4	7'-10"	10"	8 "	6 1/2"	8'-8"
CA544	PIER DIAPHRAGM	5	4	7'-2"	1'-2 1/2"	11 3/4"	8 1/2"	8'-4 1/2"
CA545	PIER DIAPHRAGM	5	4	7'-1 1/2"	1'-3"	1'-0 1/8"	8 3/4"	8'-4 1/2"
CA546	PIER DIAPHRAGM	5	53	1'-9"	9"	5 7/8"	6 3/4"	2'-6"
CB401	SLAB	4	8	3'-6"	6"	4 5/8"		4'-0"
H540	ABUT./BACKWALL	5	59	5"	3'-9"			7'-11"
LA540	ABUT./BACKWALL	5	7	2'-2"	1'-0"	2'-2"	9"	8'-10 1/2"
SERIES								
L440	PIER DIAPHRAGM	4	4	*	12"	2'-8"		60'-8"
				* DIM. A VARIES FROM 8" TO 1'-8" IN INCR. OF 2" (7 BARS TOTAL)				
L441	PIER DIAPHRAGM	4	4	2'-4 1/2"	1'-0"	2'-8"		11'-1"
L442	PIER DIAPHRAGM	4	14	5"	1'-0"	2'-8"		7'-2"
L443	PIER DIAPHRAGM	4	2	5 3/4"	1'-0"	2'-8"		7'-3 1/2"
LA441	RISER	4	4	1-8"	6"	1'-7"	9"	4'-6"
LS440	PIER DIAPHRAGM	4	8	1'-2"	1'-2"			5'-5"
VP540	ABUT./BACKWALL	5	4	2'-3"	0"	2'-8 1/2"		4'-11 1/2"
NO. 6	COUPLER BAR (PLAIN)	6	14					6'-10"
H550	RISER	5	16	1'-10"	1'-10"			5'-6"
H551	RISER	5	12	3'-0"	1'-10"			6'-8"

UNOFFICIAL SET

NOT FOR BIDDING

WINFORD A. PERRONE REGISTERED ENGINEER AGRICULTURE NO. 19774 STATE OF TENNESSEE 05-01-13

STATE OF TENNESSEE
DEPARTMENT OF TRANSPORTATION
BUREAU OF HIGHWAYS

BILL OF STEEL RIGHT LANE
STATE ROUTE 2
OVER
LITTLE DUCK RIVER
BRIDGE NO. 16-SR002-13.68
COFFEE COUNTY
2013

DESIGNED BY	JCP	DATE	JULY 2012
DRAWN BY	MP	DATE	JULY 2012
SUPERVISED BY	WAP	DATE	JULY 2012
CHECKED BY	WAP	DATE	JULY 2012

PROJECT NO.	YEAR	SHEET NO.
16003-4241-04	2013	

REVISIONS

NO.	DATE	BY	BRIEF DESCRIPTION

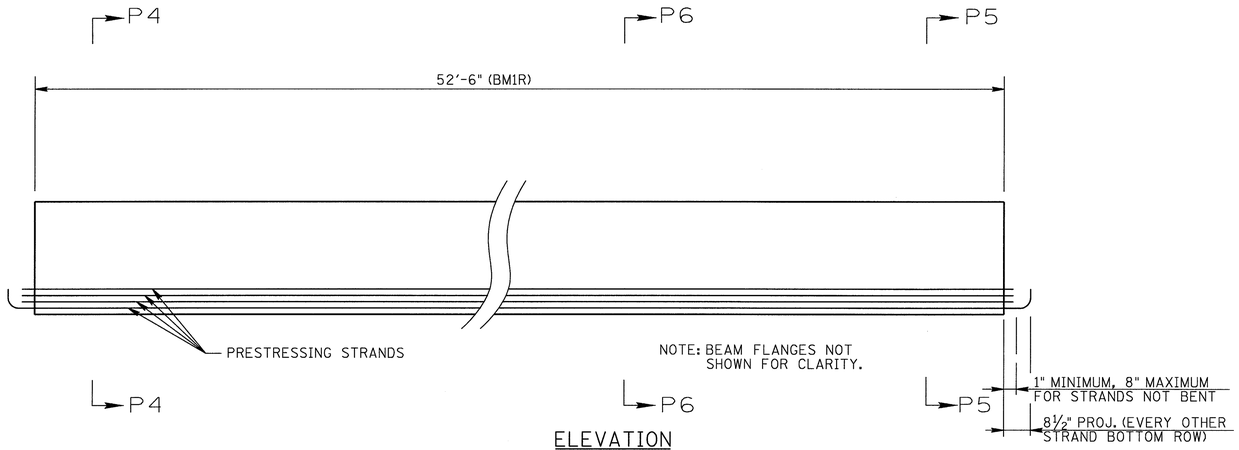

ELEVATION
SHOWING PRESTRESSING STRANDS

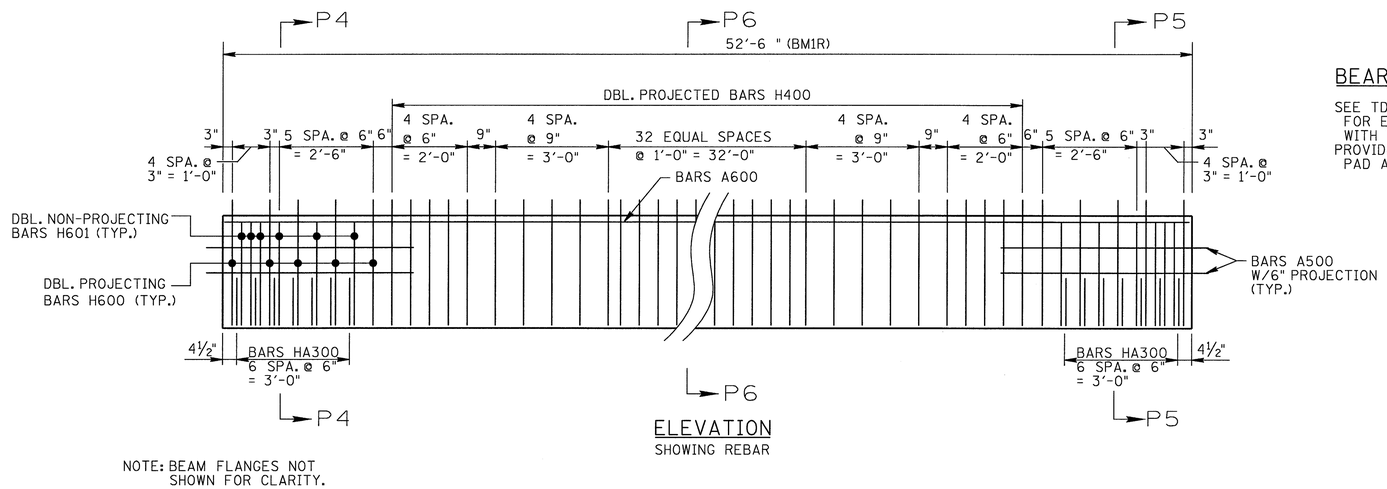

ELEVATION
SHOWING REBAR

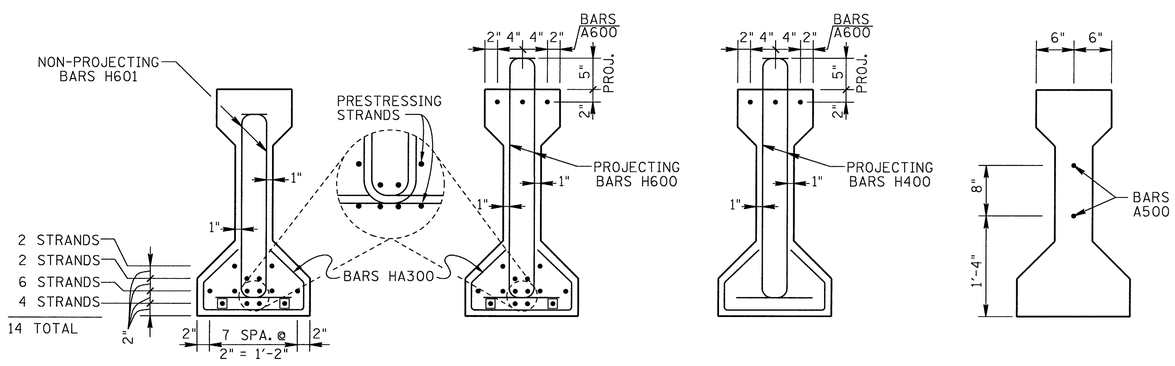

SECTION P4-P4
(SHOWING PRESTRESSING STRANDS)
14 STRANDS

SECTION P5-P5

SECTION P6-P6

▣ = DEBOND 6'-0"

END SECTION
(SHOWING BARS A500)

BEARING PAD NOTES:

SEE TDOT STANDARD SHEET NO. STD-14-2 FOR ELASTOMERIC BEARING PAD DETAILS WITH THE FOLLOWING EXCEPTION:
PROVIDE 1" THICK X 6" X 18" ELASTOMERIC PAD AT THE THE PIER NO. 1 END OF BEAM

BEAM NOTES:

NOTE: SEE STD-14-2 FOR I-BEAM STANDARD DETAILS, NOTES AND REINFORCING.
THE CONCRETE FOR THIS CONSTRUCTION SHALL BE OF SUCH PROPERTIES AS TO ATTAIN A COMPRESSIVE STRENGTH OF NOT LESS THAN 7.500 PSI AT THE AGE OF 28 DAYS AND STRESS TRANSFER SHALL NOT BE MADE TO THE BRIDGE MEMBER UNTIL THE TEST SPECIMENS INDICATE THAT THE CONCRETE HAS REACHED A COMPRESSIVE STRENGTH OF AT LEAST 6,000 PSI. SEE GENERAL NOTES FOR CONCRETE FINISHING NOTE.
ALL BEAMS ARE AASHTO - PCI STANDARD TYPE II.
ALL PRESTRESSING STRANDS TO BE ½" DIA. ASTM GRADE 270K, 7 WIRE UNCOATED STRESS RELIEVED LOW RELAXATION PRESTRESSING STRANDS.
AN INITIAL FORCE OF 31,000 LBS. SHALL BE APPLIED TO EACH STRAND IN ALL BEAMS. A=0.153 IN PER STRAND.
PRESTRESSED BEAM DESIGN DATA - PER BEAM

LIVE LOAD DISTRIBUTION FACTORS:
LLDF MOMENT=0.548 TRUCK/BEAM
LLDF SHEAR=0.716 TRUCK/BEAM
COMPOSITE DEAD LOADS:
DC=.431 LBS/FT PER BEAM
DW=.167 LBS/FT PER BEAM
COMPOSITE SLAB DESIGN STRENGTH:
f'c=3000 P.S.I.

NOTE: DOWNWARD DEFLECTION UNDER TOTAL DL IS NOT ALLOWED.

UNOFFICIAL SET
NOT FOR BIDDING

BILL OF STEEL
(PER BEAM) BM1R

BAR	SIZE	NO. REQ'D.	LENGTH
A500	5	4	5'-6"
A600	6	3	52'-2"
H400	4	102	3'-7"
H600	6	20	3'-7"
H601	6	24	3'-0"
HA300	3	14	2'-11"

ESTIMATED QUANTITIES PER BEAM

ITEM	NO. REQ'D.	CLASS 'A' CONCRETE C.Y.	STEEL BAR REINFORCING LB.	PRESTRESSING STRANDS (LOW RELAXATION) LB.
BM1R	1	4.9	751	396

STATE OF TENNESSEE
DEPARTMENT OF TRANSPORTATION
BUREAU OF HIGHWAYS

PRESTRESSED BEAM BM1R
RIGHT LANE BRIDGE
STATE ROUTE 2
OVER
LITTLE DUCK RIVER
BRIDGE NO. 16-SR002-13.68
COFFEE COUNTY
2013

DESIGNED BY	WAP	DATE	7-12
DRAWN BY	MLP	DATE	7-12
SUPERVISED BY	WAP	DATE	7-12
CHECKED BY	JCP	DATE	8-12

BR-114-75

PROJECT NO.	YEAR	SHEET NO.
16003-4241-04	2013	

REVISIONS

NO.	DATE	BY	BRIEF DESCRIPTION

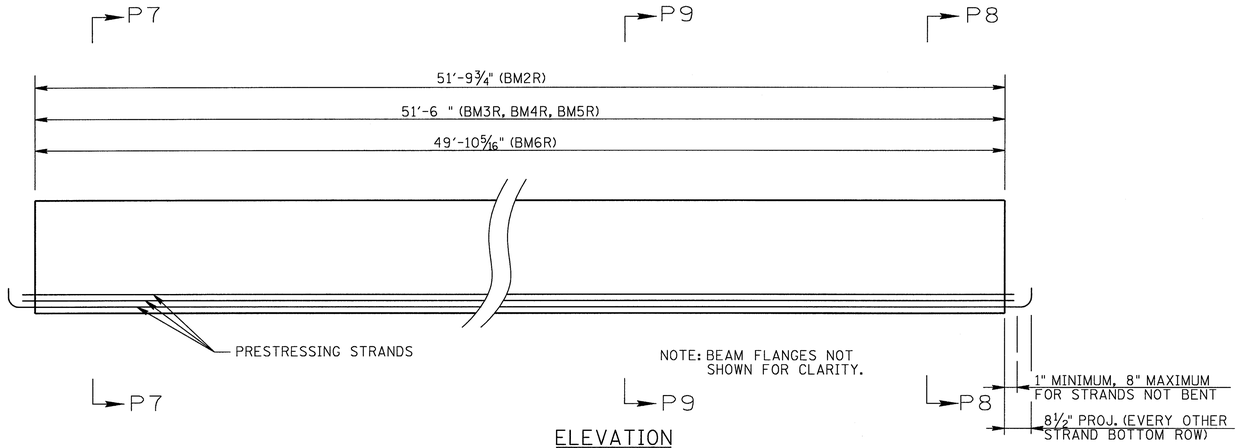

ELEVATION
SHOWING PRESTRESSING STRANDS

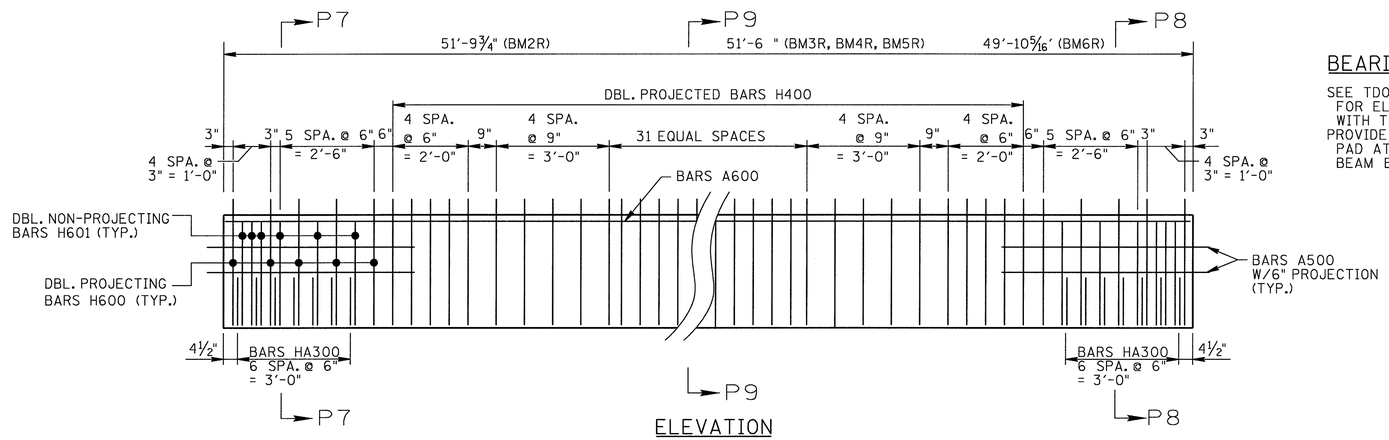

ELEVATION
SHOWING REBAR

NOTE: BEAM FLANGES NOT SHOWN FOR CLARITY.

BEARING PAD NOTES:

SEE TDOT STANDARD SHEET NO. STD-14-2 FOR ELASTOMERIC BEARING PAD DETAILS WITH THE FOLLOWING EXCEPTION:
PROVIDE 1" THICK X 6" X 18" ELASTOMERIC PAD AT THE THE PIER NO. 1 END OF BEAM BM2R.

BEAM NOTES:

NOTE: SEE STD-14-2 FOR I-BEAM STANDARD DETAILS, NOTES AND REINFORCING.
THE CONCRETE FOR THIS CONSTRUCTION SHALL BE OF SUCH PROPERTIES AS TO ATTAIN A COMPRESSIVE STRENGTH OF NOT LESS THAN 7.500 PSI AT THE AGE OF 28 DAYS AND STRESS TRANSFER SHALL NOT BE MADE TO THE BRIDGE MEMBER UNTIL THE TEST SPECIMENS INDICATE THAT THE CONCRETE HAS REACHED A COMPRESSIVE STRENGTH OF AT LEAST 6.000 PSI. SEE GENERAL NOTES FOR CONCRETE FINISHING NOTE.
ALL BEAMS ARE AASHTO - PCI STANDARD TYPE II.
ALL PRESTRESSING STRANDS TO BE ½" DIA. ASTM GRADE 270K, 7 WIRE UNCOATED STRESS RELIEVED LOW RELAXATION PRESTRESSING STRANDS.
AN INITIAL FORCE OF 31,000 LBS. SHALL BE APPLIED TO EACH STRAND IN ALL BEAMS. A=0.153 IN PER STRAND.
PRESTRESSED BEAM DESIGN DATA - PER BEAM

LIVE LOAD DISTRIBUTION FACTORS:
LLDF MOMENT=0.548 TRUCK/BEAM
LLDF SHEAR=0.716 TRUCK/BEAM
COMPOSITE DEAD LOADS:
DC=.431 LBS/FT PER BEAM
DW=.167 LBS/FT PER BEAM
COMPOSITE SLAB DESIGN STRENGTH:
f'c=3000 P.S.I.

NOTE: DOWNWARD DEFLECTION UNDER TOTAL DL IS NOT ALLOWED.

BILL OF STEEL

(PER BEAM) BM2R

BAR	SIZE	NO. REQ'D.	LENGTH
A500	5	4	5'-6"
A600	6	3	51'-5"
H400	4	100	3'-7"
H600	6	20	3'-7"
H601	6	24	3'-0"
HA300	3	14	2'-11"

(PER BEAM) BM3R, BM4R, BM5R

BAR	SIZE	NO. REQ'D.	LENGTH
A500	5	4	5'-6"
A600	6	3	51'-2"
H400	4	100	3'-7"
H600	6	20	3'-7"
H601	6	24	3'-0"
HA300	3	14	2'-11"

(PER BEAM) BM6R

BAR	SIZE	NO. REQ'D.	LENGTH
A500	5	4	5'-6"
A600	6	3	49'-6"
H400	4	100	3'-7"
H600	6	20	3'-7"
H601	6	24	3'-0"
HA300	3	14	2'-11"

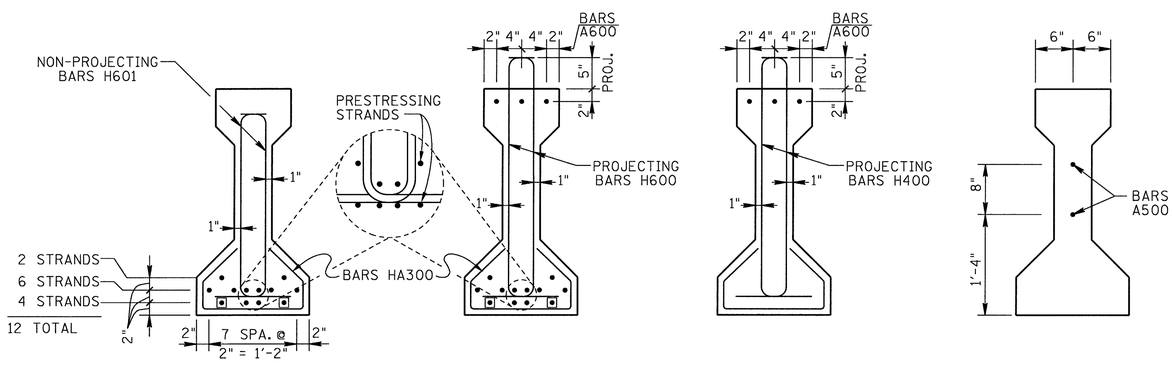

SECTION P7-P7
(SHOWING PRESTRESSING STRANDS)
12 STRANDS

SECTION P8-P8

SECTION P9-P9

END SECTION
(SHOWING BARS A500)

▣ = DEBOND 6'-0"

UNOFFICIAL SET

NOT FOR BIDDING

ESTIMATED QUANTITIES PER BEAM

ITEM	NO. REQ'D.	CLASS 'A' CONCRETE C.Y.	STEEL BAR REINFORCING LB.	PRESTRESSING STRANDS (LOW RELAXATION) LB.
BM2R	1	4.9	725	335
BM3R	1	4.9	724	333
BM4R	1	4.9	724	333
BM5R	1	4.9	724	333
BM6R	1	4.7	725	323

STATE OF TENNESSEE
DEPARTMENT OF TRANSPORTATION
BUREAU OF HIGHWAYS

PRESTRESSED BEAMS BM2R-BM6R
RIGHT LANE BRIDGE
STATE ROUTE 2
OVER
LITTLE DUCK RIVER
BRIDGE NO. 16-SR002-13.68
COFFEE COUNTY
2013

DESIGNED BY	WAP	DATE	7-12
DRAWN BY	MLP	DATE	7-12
SUPERVISED BY	WAP	DATE	7-12
CHECKED BY	JCP	DATE	8-12

BR-114-76

NOTE: RISER BLOCKS TO BE POURED MONOLITHICALLY WITH ABUTMENT BEAM.

NOTE: ELASTOMERIC PADS SHALL BE IN PLACE A MINIMUM OF ONE DAY BEFORE BEING DISTURBED BY SETTING BEAMS. PLACE RUBBER BONDING CEMENT IN SUCH A WAY THAT VISIBLE CONCRETE SURFACES WILL NOT BE STAINED.

NOTE: ALL COST TO CONSTRUCT RISER BLOCKS SHALL BE INCLUDED IN ITEM NO. 604-03.01, CLASS "A" CONCRETE (BRIDGES), C.Y.

PROJECT NO.	YEAR	SHEET NO.
16003-4241-04	2013	

REVISIONS

NO.	DATE	BY	BRIEF DESCRIPTION

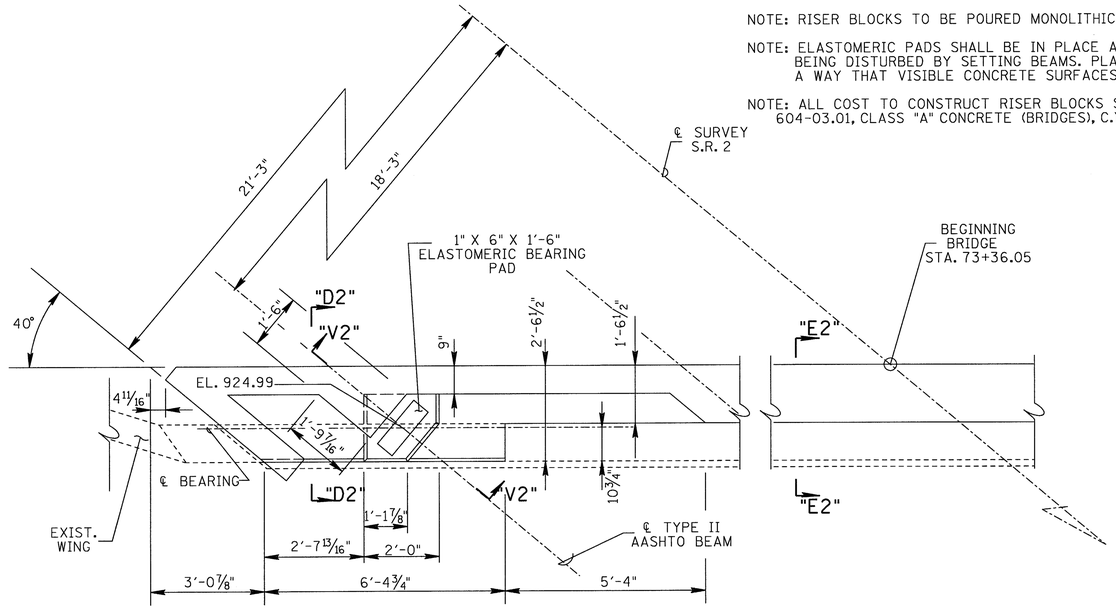

PART-PLAN

ABUTMENT NO. 1

FOR SECTION "D2"-"D2" & "E2"-"E2" SEE BR-114-73

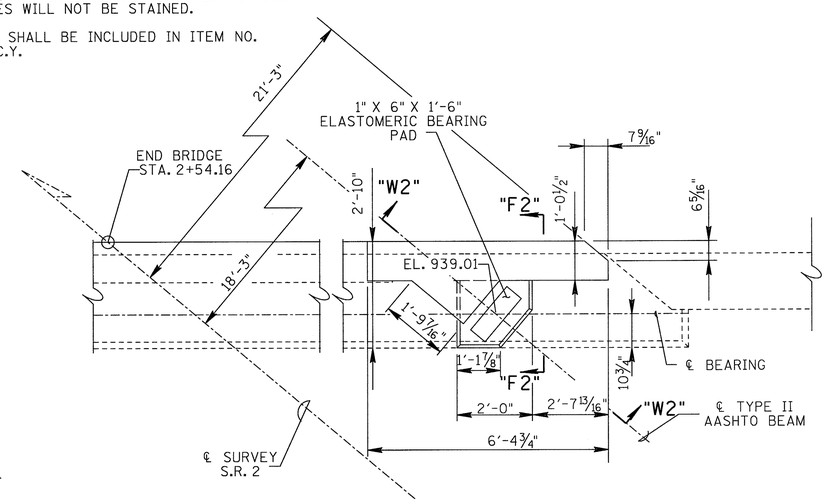

PART-PLAN

ABUTMENT NO. 2

FOR SECTION "F"-"F" SEE BR-114-73A

NOTE: EXISTING REINFORCING STEEL PROTRUDING FROM DEMOLITION LIMITS OF REMAINING ABUTMENT SHALL BE THOROUGHLY INSPECTED, COMPLETELY CLEANED AND INCORPORATED INTO NEW SLAB CONSTRUCTION AS PRACTICABLE. MINIMUM CONCRETE COVER OF 2" SHALL BE MAINTAINED ON ALL EXISTING REINFORCING STEEL INCORPORATED INTO NEW CONSTRUCTION.

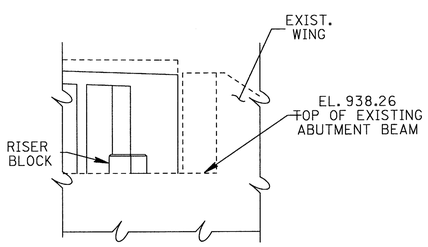

PART-ELEVATION

LOOKING FORWARD AT ABUTMENT NO. 2

SHOWING BENCH MARK

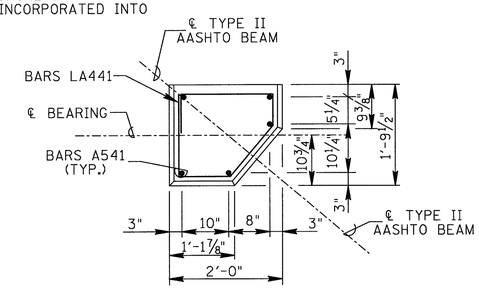

PLAN

SHOWING RISER BLOCK REINFORCEMENT

ABUT. NO. 1 & NO. 2

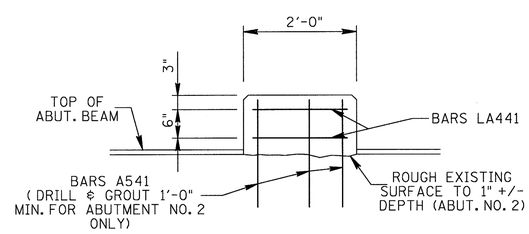

ELEVATION

SHOWING RISER BLOCK REINFORCEMENT

ABUTMENT NO. 1 & NO. 2

NOTE: COST OF EPOXY GROUT TO BE INCLUDED IN BID ITEMS.

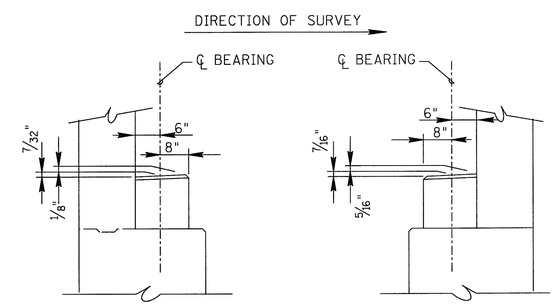

SECTION "V2-V2"

ABUTMENT NO. 1

SECTION "W2-W2"

ABUTMENT NO. 2

NOTE: RISER BLOCK BEARING SURFACE TO COMFORM TO BOTTOM OF BEAM GRADE.

UNOFFICIAL SET

NOT FOR BIDDING

STATE OF TENNESSEE
DEPARTMENT OF TRANSPORTATION
BUREAU OF HIGHWAYS

RIGHT LANE ABUTMENT DETAILS
STATE ROUTE 2
OVER
LITTLE DUCK RIVER
BRIDGE NO. 16-SR002-13.68
COFFEE COUNTY
2013

DESIGNED BY	JCP	DATE	JULY 2012
DRAWN BY	MP	DATE	JULY 2012
SUPERVISED BY	WAP	DATE	JULY 2012
CHECKED BY	WAP	DATE	JULY 2012

BR-114-77

PROJECT NO.	YEAR	SHEET NO.
16003-4241-04	2013	

REVISIONS

NO.	DATE	BY	BRIEF DESCRIPTION

NOTE: RISER BLOCKS TO BE POURED MONOLITHICALLY WITH PIER CAP.

NOTE: ELASTOMERIC PADS SHALL BE IN PLACE A MINIMUM OF ONE DAY BEFORE BEING DISTURBED BY SETTING BEAMS. PLACE RUBBER BONDING CEMENT IN SUCH A WAY THAT VISIBLE CONCRETE SURFACES WILL NOT BE STAINED.

NOTE: ALL COST TO CONSTRUCT RISER BLOCKS SHALL BE INCLUDED IN ITEM NO. 604-03.01, CLASS "A" CONCRETE (BRIDGES), C.Y.

NOTE: EXISTING REINFORCING STEEL PROTRUDING FROM DEMOLITION LIMITS OF REMAINING PIER CAP SHALL BE THOROUGHLY INSPECTED, COMPLETELY CLEANED AND INCORPORATED INTO NEW SLAB CONSTRUCTION AS PRACTICABLE. MINIMUM CONCRETE COVER OF 2" SHALL BE MAINTAINED ON ALL EXISTING REINFORCING STEEL INCORPORATED INTO NEW CONSTRUCTION.

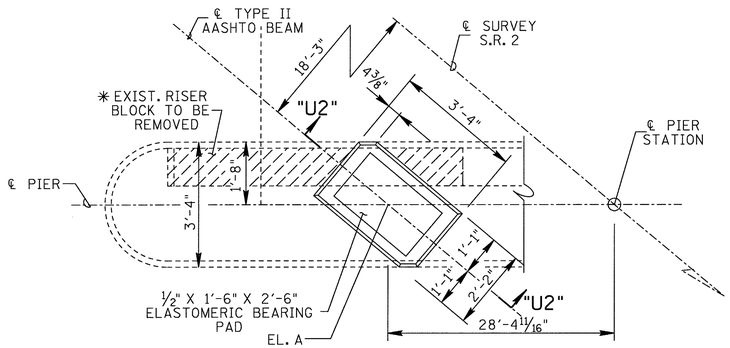

PART-PLAN

SHOWN TYP. AT PIERS NO. 2 THRU 5
SIMILAR AT PIER NO. 1 (SEE RISER BLOCK DETAIL THIS SHEET)

✱: FINISH EXISTING SURFACE WITH QUICK-SET PATCHING MATERIAL AND INCLUDE ALL COST IN ITEM 604-10.54 CONCRETE, S.F. REPAIR.

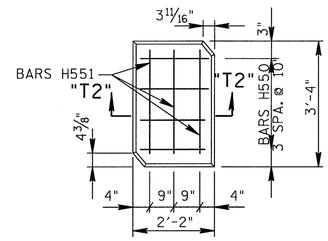

PLAN

SHOWING RISER BLOCK REINFORCEMENT
TYPICAL AT EACH PIER

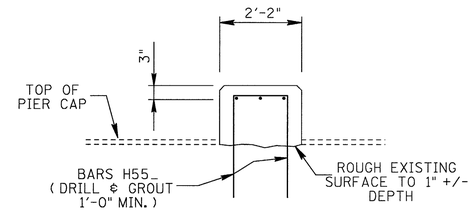

SECTION "T2"-"T2"

SHOWING RISER BLOCK REINFORCEMENT
TYPICAL AT EACH PIER

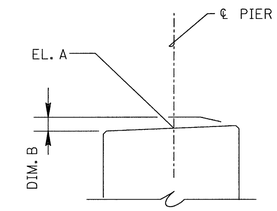

SECTION "U2-U2"

NOTE: RISER BLOCK BEARING SURFACE TO COMFORM TO BOTTOM OF BEAM GRADE.

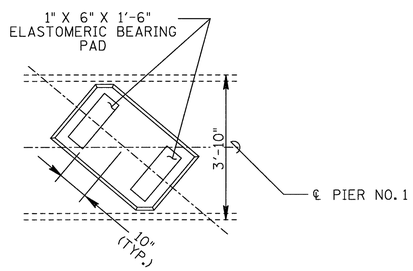

DETAIL

SHOWING RISER BLOCK PLAN
FOR AT PIER NO. 1

RISER ELEVATION TABLE

PIER NO.	℄ PIER STA.	EL. A	DIM. B
1	STA. 73+91.45	926.53	1 1/8"
2	STA. 0+42.05	928.42	1 5/16"
3	STA. 0+95.05	930.63	1 5/8"
4	STA. 1+48.05	933.17	1 13/16"
5	STA. 2+01.05	936.05	2"

UNOFFICIAL SET

NOT FOR BIDDING

STATE OF TENNESSEE
DEPARTMENT OF TRANSPORTATION
BUREAU OF HIGHWAYS

RIGHT LANE PIER DETAILS
STATE ROUTE 2
OVER
LITTLE DUCK RIVER
BRIDGE NO. 16-SR002-13.68
COFFEE COUNTY
2013

DESIGNED BY	JCP	DATE	JULY 2012
DRAWN BY	MP	DATE	JULY 2012
SUPERVISED BY	WAP	DATE	JULY 2012
CHECKED BY	WAP	DATE	JULY 2012

BR-114-77A

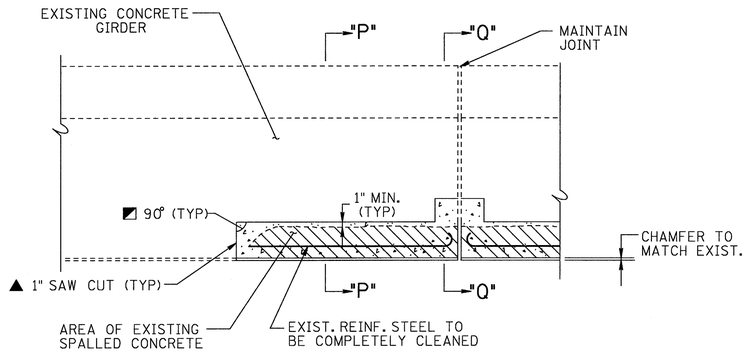

ELEVATION

TYPICAL GIRDER REPAIR

DENOTES: APPROXIMATE AREAS TO BE REPAIRED WITH HIGH EARLY STRENGTH CONCRETE, ITEM NO. 604-10.05. SEE DETAILS AND NOTE ON THIS DRAWING.

LEFT LANE
ESTIMATED SUPERSTRUCTURE REPAIRS

LOCATION OF REPAIR	ITEM NO. 604-10.54 S.F.	ITEM NO. 604-10.05 S.F.	ITEM NO. 604-10.62 L.F.
SPAN 1	10	10	33
SPAN 2	10	14	2
SPAN 3	10	52	25
SPAN 4	10	82	37
SPAN 5	10	2	21
SPAN 6	10	14	19
TOTAL	60	174	137

RIGHT LANE
ESTIMATED SUPERSTRUCTURE REPAIRS

LOCATION OF REPAIR	ITEM NO. 604-10.54 S.F.	ITEM NO. 604-10.05 S.F.	ITEM NO. 604-10.62 L.F.
SPAN 1	0	10	2
SPAN 2	1	8	1
SPAN 3	0	8	0
SPAN 4	0	3	0
SPAN 5	0	2	0
SPAN 6	0	10	1
TOTAL	1	41	3

PROJECT NO.	YEAR	SHEET NO.
16003-4241-04	2013	

REVISIONS

NO.	DATE	BY	BRIEF DESCRIPTION

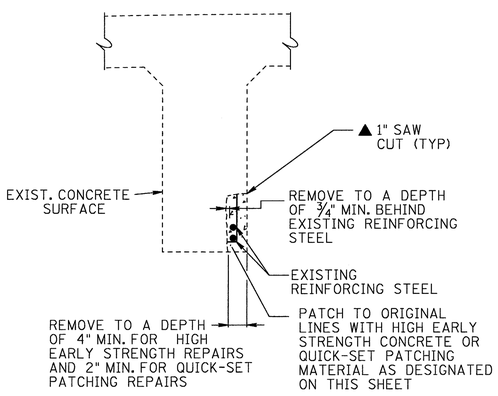

SECTION "Q" - "Q"

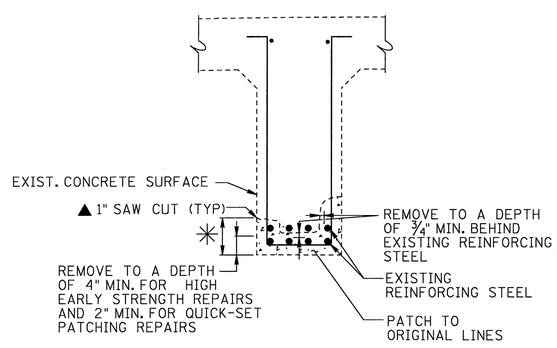

SECTION "P"-"P"

✳ DENOTES: LIMITS AND LOCATION OF REPAIRS TO BE DESIGNATED BY THE ENGINEER

▲ DENOTES: SAW CUTS IN BEAM STEMS SHALL BE ONE INCH. EXTREME CAUTION SHALL BE TAKEN TO PREVENT DAMAGE TO EXISTING REINFORCEMENT. APPROXIMATE CLEARANCE TO REINFORCEMENT SHALL BE DETERMINED IN THE FIELD BY THE CONTRACTOR PRIOR TO SAW CUTTING. ALL REINFORCING STEEL SHALL BE COMPLETELY CLEANED TO REMOVE ALL RUST. ALL EXIST. REINFORCING SHALL REMAIN IN PLACE. ALL WORK MUST MEET WITH FULL APPROVAL OF ENGINEER.

NOTE: THE COST OF REMOVING PORTIONS OF THE EXISTING CONCRETE WITHIN THE LIMITS SHOWN, SAW CUTTING, COMPLETELY CLEANING EXISTING REINFORCING STEEL, HIGH EARLY STRENGTH CONCRETE OR QUICK-SET PATHCING MATERIAL, FORMING, LABOR AND ALL MISCELLANEOUS MATERIAL NECESSARY TO COMPLETE THE REPAIRS AS SHOWN SHALL BE INCLUDED IN PRICE BID FOR ITEM NO. 604-10.54 AND NO. 604-10.05, CONCRETE REPAIRS, S.F.

NOTE: ITEM NO. 604-10.54 CONCRETE REPAIRS, S.F., AND ITEM NO. 604-10.05, CONCRETE, S.F. SHALL BE BID WITH THE CONTINGENCY THAT IT MAY BE INCREASED, DECREASED OR ELIMINATED AS DIRECTED BY THE ENGINEER.

NOTE: POWER DRIVEN HAND TOOLS USED FOR THE REMOVAL OF UNSOUND CONCRETE ARE SUBJECT TO THE FOLLOWING RESTRICTIONS:
1. PNEUMATIC HAMMERS HEAVIER THAN A 35 LB CLASS SHALL NOT BE USED.
2. CHIPPING HAMMERS OF THE 15 LB CLASS SHALL BE USED TO REMOVE CONCRETE FROM BEHIND THE REINFORCING STEEL.

NOTE: THE CONTRACTOR SHALL BE RESPONSIBLE FOR THE STABILITY OF THE STRUCTURE DURING CONCRETE BEAM REPAIRS. ANY TEMPORARY SUPPORT, IF REQUIRED, SHALL BE THE RESPONSIBILITY OF THE CONTRACTOR AND SHALL MEET WITH THE APPROVAL OF THE ENGINEER. COST OF ALL LABOR AND MATERIALS NECESSARY TO INSTALL, MAINTAIN AND REMOVE TEMPORARY SUPPORTS SHALL BE INCLUDED IN ITEM NO. 602-10.05, BRACING REPAIRS, L.S.

NOTE: PATCHING MATERIAL SHALL BE POLYMER-MODIFIED CEMENTITIOUS STRUCTURAL PATCHING MATERIAL FROM THE TDOT QUALIFIED PRODUCTS LIST 13, SECTION B.6.

NOTE: LIMITS AND LOCATION OF REPAIRS TO BE DESIGNATED BY THE ENGINEER. MIN. DEPTH FOR QUICK-SET PATCHING REPAIR AREAS IS 2" AND FOR HIGH EARLY STRENGTH REPAIR AREAS IS 4". DEPTH MAY BE INCREASED TO EXTEND INTO SOUND CONCRETE AS DIRECTED BY THE ENGINEER.

UNOFFICIAL SET

NOT FOR BIDDING

STATE OF TENNESSEE
DEPARTMENT OF TRANSPORTATION
BUREAU OF HIGHWAYS

GIRDER REPAIR DETAILS
STATE ROUTE 2
OVER
LITTLE DUCK RIVER
BRIDGE NO. 16-SR002-13.68 RT. & LT.
COFFEE COUNTY
2013

DESIGNED BY	WAP	DATE	7-12
DRAWN BY	MLP	DATE	7-12
SUPERVISED BY	WAP	DATE	7-12
CHECKED BY	JCP	DATE	8-12

BR-114-78

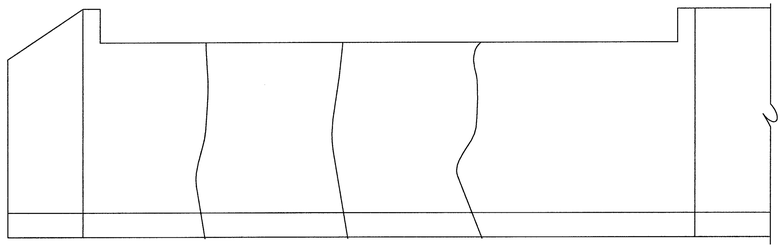

TYPICAL ABUT. #1 ELEVATION

LOOKING BACK ON SURVEY

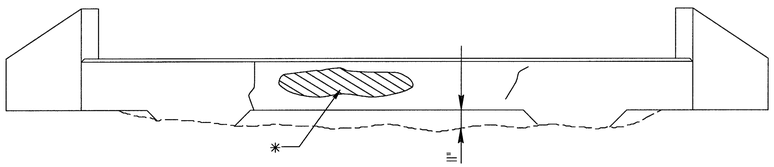

TYPICAL ABUT. #2 ELEVATION

LOOKING FORWARD ON SURVEY

* DENOTES: LIMITS OF FILL SETTLEMENT AT ABUTMENTS TO BE REPAIRED AS SHOWN ON TYPICAL SECTION @ ABUTMENT NO. 2 ON SHEET BR-114-82.

NOTE: FILL SETTLEMENT REPAIRS WILL BE PAID FOR UNDER ITEM NO. 303-01.02, GRANULAR BACKFILL, TON

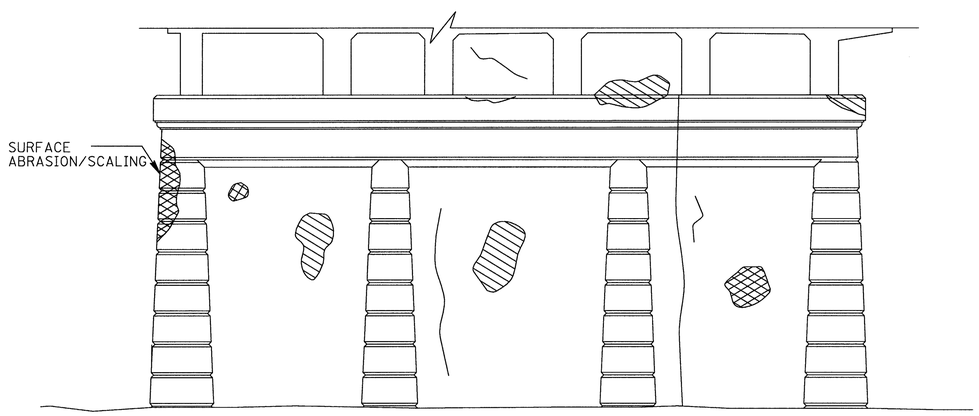

TYPICAL PIER ELEVATION

SHOWING SAMPLE OF REPAIR AREAS ON PIER NO. 1 THROUGH PIER NO. 5

DENOTES: APPROXIMATE AREAS TO BE REPAIRED WITH HIGH EARLY STRENGTH CONCRETE, ITEM NO. 604-10.05. SEE DETAILS AND NOTE ON THIS DRAWING.

DENOTES: APPROXIMATE AREAS TO BE REPAIRED WITH QUICK-SET PATCHING MATERIAL, ITEM NO. 604-10.54. SEE DETAILS AND NOTE ON THIS DRAWING.

DENOTES: CRACK TO BE REPAIRED BY EPOXY INJECTION, ITEM NO. 604-10.62. SEE NOTES ON DWG. NO. BR-114-81.

DESIGNED BY	WAP	DATE	7-12
DRAWN BY	MLP	DATE	7-12
SUPERVISED BY	WAP	DATE	7-12
CHECKED BY	JCP	DATE	8-12

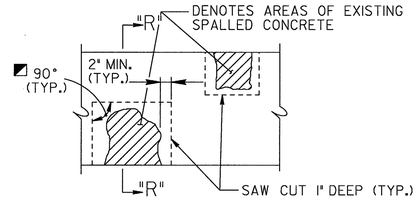

DETAIL SHOWING AREAS OF EXISTING SPALLED CONCRETE SURFACES TO BE REMOVED AND REPAIRED

◪ DENOTES: SAW CUT EXISTING CONCRETE SURFACES SO AS TO OBTAIN SQUARED CORNERS. EDGES SHALL NOT BE FEATHERED OR TAPERED.

▲ DENOTES: SAW CUTS IN SUBSTRUCTURE SHALL BE ONE INCH. EXTREME CAUTION SHALL BE TAKEN TO PREVENT DAMAGE TO EXISTING REINFORCEMENT. APPROXIMATE CLEARANCE TO REINFORCEMENT SHALL BE DETERMINED IN THE FIELD BY THE CONTRACTOR PRIOR TO SAW CUTTING. ALL REINFORCING STEEL SHALL BE COMPLETELY CLEANED TO REMOVE ALL RUST. ALL EXISTING REINFORCING SHALL REMAIN IN PLACE. ALL WORK MUST MEET WITH FULL APPROVAL OF ENGINEER.

NOTE: LIMITS AND LOCATION OF REPAIRS TO BE DESIGNATED BY THE ENGINEER. MIN. DEPTH FOR QUICK-SET PATCHING REPAIR AREAS IS 2" AND FOR HIGH EARLY STRENGTH REPAIR AREAS IS 4". DEPTH MAY BE INCREASED TO EXTEND INTO SOUND CONCRETE AS DIRECTED BY THE ENGINEER.

NOTE: SAW CUT EXISTING CONCRETE SURFACES SO AS TO OBTAIN SQUARED CORNERS.

NOTE: THE COST OF REMOVING PORTIONS OF THE EXISTING CONCRETE WITHIN THE LIMITS SHOWN, SAW CUTTING, COMPLETELY CLEANING EXISTING REINFORCING STEEL, QUICK-SET PATCHING MATERIAL, HIGH EARLY STRENGTH CONCRETE, FORMING, LABOR AND ALL MISCELLANEOUS MATERIAL NECESSARY TO COMPLETE THE REPAIRS AS SHOWN SHALL BE INCLUDED IN PRICE BID FOR ITEM NO. 604-10.54 AND 604-10.05, CONCRETE REPAIRS, S.F.

NOTE: POWER DRIVEN HAND TOOLS USED FOR THE REMOVAL OF UNSOUND CONCRETE ARE SUBJECT TO THE FOLLOWING RESTRICTIONS:
1. PNEUMATIC HAMMERS HEAVIER THAN A 35 LB CLASS SHALL NOT BE USED.
2. CHIPPING HAMMERS OF THE 15 LB CLASS SHALL BE USED TO REMOVE CONCRETE FROM BEHIND THE REINFORCING STEEL.

NOTE: PATCHING MATERIAL SHALL BE POLYMER-MODIFIED CEMENTITIOUS STRUCTURAL PATCHING MATERIAL FROM THE TDOT QUALIFIED PRODUCTS LIST 13, SECTION B.6.

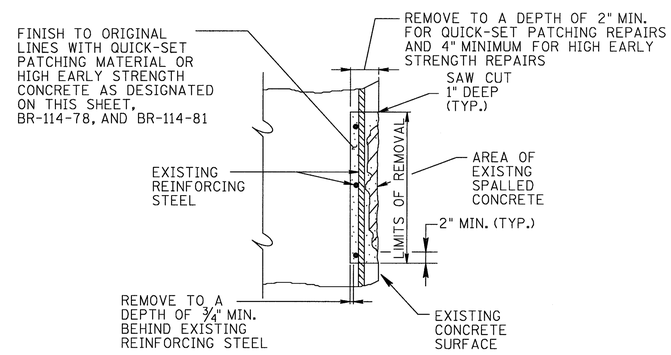

SECTION "R"-"R"

NOTE: REMOVE CONCRETE IN ALL DELAMINATED AREAS TO A DEPTH OF 3/4" BELOW THE TOP BAR OF THE TOP MAT OF REINFORCING STEEL. ALL REINFORCING STEEL IN AREAS OF DECK REPAIR SHALL BE COMPLETELY CLEANED. AREAS OF CONCRETE REMOVAL SHALL BE DESIGNATED BY PERSONNEL FROM THE BRIDGE INSPECTIONS AND REPAIR OFFICE. INSPECTIONS TO DETERMINE AREAS OF DECK REPAIR SHALL BE SCHEDULED WITH THE BRIDGE REPAIR OFFICE AT LEAST THREE (3) DAYS IN ADVANCE. DECK REPAIR WILL BE PAID FOR UNDER ITEM NO. 604-10.50, BRIDGE DECK REPAIR (PARTIAL DEPTH OF SLAB), AND ITEM NO. 604-10.30, BRIDGE DECK REPAIR (FULL DEPTH OF SLAB). DURING PARTIAL DEPTH REPAIRS, SHOULD DETERIORATED CONCRETE BE ENCOUNTERED WHICH APPEARS TO RUN FULL DEPTH IN THE SLAB, THE ENGINEER MAY DESIGNATE THESE AREAS TO BE REPAIRED UNDER ITEM NO. 604-10.30. POWER DRIVEN HAND TOOLS USED FOR REMOVAL OF UNSOUND CONCRETE IN MAKING PARTIAL AND FULL DEPTH REPAIRS ARE SUBJECT TO THE FOLLOWING RESTRICTIONS:

1) (PARTIAL DEPTH REPAIRS) PNEUMATIC HAMMERS HEAVIER THAN NOMINAL 60 POUND CLASS SHALL NOT BE USED.
2) (FULL DEPTH REPAIRS) PNEUMATIC HAMMERS HEAVIER THAN NOMINAL 90 POUND CLASS SHALL NOT BE USED. ALSO ALL DECK REPAIR OVER BEAMS WILL BE RESTRICTED TO 60 POUND PNEUMATIC HAMMERS. 3) CHIPPING HAMMERS OF THE 15 POUND CLASS SHALL BE USED TO REMOVE CONCRETE FROM BENEATH ANY REINFORCING STEEL.

NOTE: CARE SHALL BE TAKEN WHEN REMOVING ANY AREAS OF SLAB NEAR THE 1" SAW CUT LINE. A 1" MIN. VERTICAL DEPTH SAW CUT LINE IS REQUIRED AROUND THE FULL PERIMETER OF THE PATCH PRIOR TO PLACEMENT OF CONCRETE.

PROJECT NO.	YEAR	SHEET NO.
16003-4241-04	2013	

REVISIONS

NO.	DATE	BY	BRIEF DESCRIPTION

LEFT LANE
ESTIMATED REPAIR SUBSTRUCTURE QUANTITIES*

LOCATION OF REPAIR	ITEM NO. 604-10.54 S.F.	ITEM NO. 604-10.05 S.F.	ITEM NO. 604-10.62 L.F.
ABUT. 1	2	0	70
PIER 1	9	87	45
PIER 2	7	195	30
PIER 3	7	130	55
PIER 4	5	29	23
PIER 5	6	170	32
ABUT. 2	2	20	16
TOTAL	39	631	271

* INCLUDES DIAPHRAGM REPAIR QUANTITIES

RIGHT LANE
ESTIMATED REPAIR SUBSTRUCTURE QUANTITIES*

LOCATION OF REPAIR	ITEM NO. 604-10.54 S.F.	ITEM NO. 604-10.05 S.F.	ITEM NO. 604-10.62 L.F.
ABUT. 1	2	5	90
PIER 1	65	5	42
PIER 2	20	3	1
PIER 3	30	4	0
PIER 4	37	32	21
PIER 5	33	8	0
ABUT. 2	2	25	90
TOTAL	189	82	154

* INCLUDES DIAPHRAGM REPAIR QUANTITIES

UNOFFICIAL SET

NOT FOR BIDDING

STATE OF TENNESSEE
DEPARTMENT OF TRANSPORTATION
BUREAU OF HIGHWAYS

ABUTMENTS/PIERS
REPAIR DETAILS
STATE ROUTE 2
OVER
LITTLE DUCK RIVER
BRIDGE NO. 16-SR002-13.68 RT. & LT.
COFFEE COUNTY
2013

PROJECT NO.	YEAR	SHEET NO.
16003-4241-04	2013	

REVISIONS

NO.	DATE	BY	BRIEF DESCRIPTION

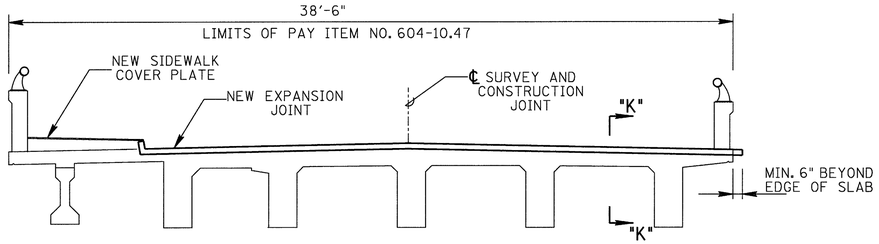

LOOKING FORWARD AT
AT PIER NO. 3 LEFT LANE BRIDGE

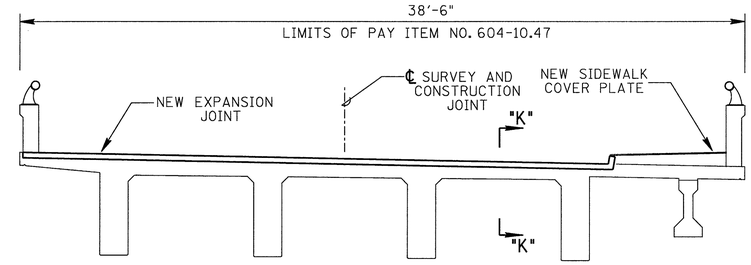

LOOKING FORWARD
AT PIER NO. 1 RIGHT LANE BRIDGE

EXPANSION JOINT ELEVATION

SHOWING TYPE "H" STRIP SEALS

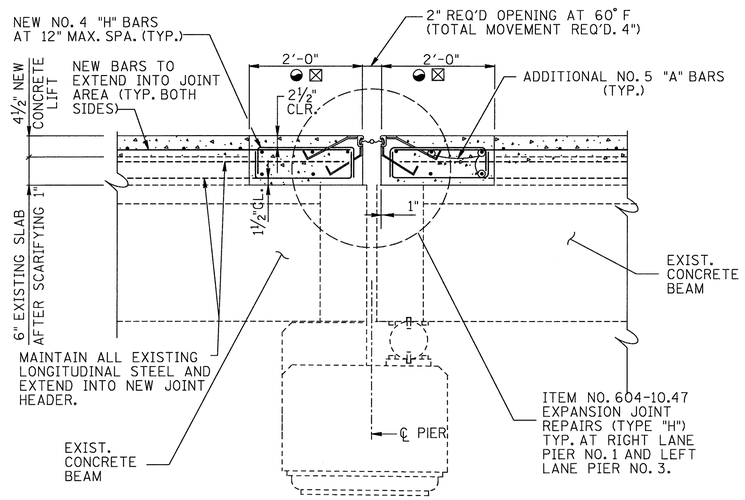

SECTION "K"-"K"

SHOWN ALONG ℄ CONCRETE BEAM
FOR LOCATION SEE FRAMING PLAN ON
DWG. NO. BR-114-60 AND BR-114-73

◒ DENOTES: LIMITS OF EXISTING CONCRETE REMOVAL AND RECONSTRUCTION. TO BE POURED SEPARATELY FROM 4½" OVERLAY.

☒ DENOTES: TO BE POURED AFTER ALL OTHER DECK CONCRETE IS POURED AND EXPANSION SET TO PROPER GRADE AND SLOPE.

EXPANSION JOINT NOTES:

1. EXPANSION JOINT REPLACEMENT DETAIL SHOWN THIS SHEET IS FOR GENERAL INFORMATION ONLY. FOR COMPLETE DETAILS AND NOTES, SEE REF. DWG. NOS. SBR-2-115, SBR-2-116, AND SBR-2-120.

2. EXPANSION JOINT REPLACEMENT SHALL BE CONSTRUCTED IN PHASES AS SHOWN ON DWG. NO. BR-114-63 THE STEEL PORTIONS OF THE EXPANSION DEVICE SHALL BE FABRICATED IN SECTIONS IN ORDER TO MAINTAIN ONE (1) 10' TRAFFIC LANE AT ALL TIMES. THE SECTIONS ARE TO BE CONNECTED WITH A FULL PENETRATION BUTT WELD. THE ELASTOMERIC SEAL SHALL BE ONE PIECE FOR FULL LENGTH OF EXPANSION JOINT INCLUDING PARAPET FACE PROJECTIONS.

3. EXPANSION JOINT OPENING SHALL BE SET ACCORDING TO TEMPERATURE CHART SHOWN ON APPROVED EXPANSION JOINT SHOP DRAWINGS.

4. PROVISIONS SHALL BE MADE BY THE CONTRACTOR TO ENSURE THAT THE VERTICAL ALIGNMENT OF THE NEW STEEL EXTRUSION AND CONCRETE SLAB END SURFACES CONFORM TO THE EXISTING ROADWAY PROFILE.

5. PROVISIONS SHALL BE MADE DURING SLAB REMOVAL TO PROTECT THE EXISTING LONGITUDINAL STEEL FROM DAMAGE. THE EXISTING REINFORCING STEEL SHALL BE COMPLETELY CLEANED, REALIGNED, AND INCORPORATED INTO THE NEW CONSTRUCTION.

6. THE COST OF REMOVING PORTIONS OF THE EXISTING SLAB AND CURBS WITHIN THE LIMITS SHOWN, COMPLETELY CLEANING EXISTING REINFORCING STEEL, CLASS "D" CONCRETE (BRIDGE DECK), FORMING, AND ALL MISCELLANEOUS MATERIAL NECESSARY FOR CONSTRUCTING THE NEW SECTIONS AS SHOWN SHALL BE INCLUDED IN PRICE BID FOR ITEM NO. 604-10.47, EXPANSION JOINT REPAIRS (TYPE "H"), L.F.

7. TRAFFIC LOADS SHALL NOT BE PERMITTED ON ANY OF THE REPAIRED AREAS UNTIL TEST CYLINDERS ATTAIN A MINIMUM COMPRESSIVE STRENGTH OF 4500 P.S.I. AND THE CONCRETE HAS BEEN IN PLACE A MINIMUM OF TEN (10) DAYS.

UNOFFICIAL SET

NOT FOR BIDDING

STATE OF TENNESSEE
DEPARTMENT OF TRANSPORTATION
BUREAU OF HIGHWAYS

STRIP SEAL EXPANSION JOINT
DETAILS
STATE ROUTE 2
OVER
LITTLE DUCK RIVER
BRIDGE NO. 16-SR002-13.68 RT. & LT.
RT. & LT. LANES
COFFEE COUNTY
2013

DESIGNED BY	JCP	DATE	SEPT. 2012
DRAWN BY	MP	DATE	SEPT. 2012
SUPERVISED BY	WAP	DATE	SEPT. 2012
CHECKED BY	WAP	DATE	SEPT. 2012

BR-114-80

PROJECT NO.	YEAR	SHEET NO.
16003-4241-04	2013	

REVISIONS

NO.	DATE	BY	BRIEF DESCRIPTION

EPOXY INJECTION NOTES

UNLESS OTHERWISE NOTED THE INTENT OF THIS SPECIFICATION IS FOR DESIGNATED CRACKS TO BE INJECTED THEIR FULL LENGTH AND DEPTH. DESIGNATED CRACKS SHALL BE INJECTED WITH AN APPROVED EPOXY RESIN ADHESIVE FILLING ALL VOIDS FOR THE CRACK DEPTH OR THICKNESS OF THE MEMBER. THE EPOXY RESIN ADHESIVE SHALL BE ON THE CURRENT QUALIFIED PRODUCTS LIST MAINTAINED BY THE DIVISION OF MATERIALS AND TEST. ALL CRACKS SHALL BE INJECTED USING AN ADHESIVE SUITABLE FOR THE FIELD CONDITIONS (CRACK WIDTH, TEMPERATURE, HUMIDITY, ETC.) RECOMMENDED BY THE ADHESIVE MANUFACTURER AS SHOWN ON MATERIAL DATA SHEETS. FOLLOWING INJECTION, ALL INJECTION PORTS AND CAPPING MATERIAL SHALL BE REMOVED FROM EXPOSED SURFACES LEAVING THE SURFACE SMOOTH AND FLUSH WITH THE SURROUNDING CONCRETE SURFACES.

THE CONTRACTOR SHALL HAVE SUFFICIENT EXPERIENCE AND TRAINING TO PERFORM THE EPOXY INJECTION IN ACCORDANCE WITH THESE PLANS. PRIOR TO PERFORMING ANY WORK, THE CONTRACTOR SHALL SUBMIT TO THE ENGINEER A WRITTEN PROCEDURE FOR PERFORMING THE EPOXY INJECTION. THE PROCEDURE SHALL DESCRIBE IN DETAIL HOW THE WORK WILL BE PERFORMED. THE PROCEDURE SHALL INCLUDE, BUT NOT BE LIMITED TO THE FOLLOWING INFORMATION:

1. DESCRIPTION OF EQUIPMENT
   A. THE INJECTION EQUIPMENT SHALL BE OF THE TYPE THAT MIXES ADHESIVE COMPONENTS AT THE INJECTION HEAD.
   B. THE INJECTION EQUIPMENT SHALL BE CAPABLE OF DISCHARGING MIXED ADHESIVE AT ANY PRESSURE UP TO 300 PSI. THE INJECTION EQUIPMENT SHALL BE EQUIPPED WITH GAUGES WHICH CAN MEASURE THE INJECTION PRESSURE AND VOLUME.
2. EQUIPMENT CALIBRATION PROCEDURES AND SCHEDULE.
3. MATERIALS TO BE USED (INCLUDING MANUFACTURER DATA SHEETS).
   A. CAPPING MATERIAL
   B. EPOXY ADHESIVE (TYPE TO BE APPROPRIATE FOR CRACK SIZES TO BE INJECTED).
4. PORT SPACING
   A. PORT SPACING SHALL NOT BE LESS THAN THE THICKNESS OF THE CONCRETE IN THAT LOCATION.
5. INJECTION SEQUENCE
   A. INJECTION SHALL PROCEED FROM LOWER END OF CRACK ALONG ADJACENT PARTS.
   B. SKIPPING OF PORTS DURING INJECTIONS SHALL NOT BE ALLOWED.

THE CONTRACTOR SHALL HAVE THE MANUFACTURER'S INSTRUCTIONS FOR PROPORTIONING AND MIXING AVAILABLE AT THE JOB SITE AT ALL TIMES AND SHALL ENSURE THAT THE EQUIPMENT IS SUPPLYING THE MIXED ADHESIVE IN THE CORRECT PROPORTIONS.

TO ENSURE PROPER MIXING AND PROPORITONING, SAMPLES SHALL BE TAKEN FROM THE INJECTOR HEAD. SAMPLES SHALL BE TAKEN AT THE START OF EACH WORKDAY AND EACH TIME THE ADHESIVE RESERVOIRS ARE REFILLED. THE SAMPLES SHALL BE IN A TEST CUP. THE SAMPLE SHALL BE MONITORED TO ENSURE THAT THE CURE TIME IS IN COMPLIANCE WITH THE MANUFACTURER'S DATA SHEET. IF THE SAMPLES DO NOT CURE IN THE SPECIFIED TIME THEN THE EQUIPMENT USED TO PRODUCE THE SAMPLE SHALL NOT BE USED UNTIL THE PROBLEM IS CORRECTED.

CORE SAMPLES SHALL BE TAKEN AS VERIFICATION OF THE QUALITY OF WORK. THE CONTRACTOR SHALL TAKE ONE (1) ONE (1) INCH DIAMETER (FULL DEPTH OF CONCRETE AT LOCATION CORED) CORE SAMPLE STARTING WITH THE FIRST REPAIR LOCATION THEN EVERY 3RD REPAIR LOCATION AFTERWARDS. WORK SHALL NOT PROCEED UNTIL THE CORE SAMPLE IS TAKEN AND ACCEPTED. ALL CORE SAMPLES AND HOLES SHALL BE INDEXED FOR FUTURE REFERENCE. THE ENGINEER SHALL DESIGNATE ALL LOCATIONS TO BE CORED. IF ANY CORES SHOW UNACCEPTABLE RESULTS, ALL WORK SHALL BE STOPPED UNTIL THE CONTRACTOR SUBMITS A PROPOSAL FOR CORRECTING UNACCEPTABLE WORK.

THE INITIAL CORE WILL ALSO SERVE TO QUALIFY THE FOREMAN OF THIS WORK. IF AT ANY TIME A NEW FOREMAN IS USED, HE SHALL BE QUALIFIED WITH A CORE SAMPLE.

THE CONTRACTOR, AT HIS EXPENSE, SHALL REPAIR ALL CORE HOLES WITH AN APPROVED CEMENTIIOUS PATCHING MATERIAL.

CORE SAMPLES SHALL BE VISUALLY INSPECTED TO CONFIRM THAT CRACKS ARE COMPLETELY FILLED WITH ADHESIVE. ANY CORE HAVING LESS THAN 95% OF THE CRACK FILLED WITH ADHESIVE SHALL BE CONSIDERED UNACCEPTABLE AND BE REJECTED.

CORE SAMPLES SHALL BE TESTED FOR BOND STRENGTH. SAMPLES MAY BE FRACTURED BY HAMMER BLOW TO CRACK AREA OR THROWN AT A HARD SURFACE. IF ADHESIVE FAILURE OCCURS BEFORE CONCRETE FAILURE, THE CORE SHALL BE CONSIDERED UNACCEPTABLE AND REJECTED.

PAYMENT FOR EPOXY INJECTION CRACK REPAIR SHALL BE MADE UNDER ITEM NO. 604-10.62, EPOXY INJECTION REPAIR (COMPLETE AND IN PLACE), LF AND ITEM NO. 604-10.58, EPOXY INJECTION (INJECTION), GAL.

PLACE BID FOR ITEM NO. 604-10.62, EPOXY INJECITON REPAIR (COMPLETE AND IN PLACE), LF, SHALL INCLUDE COST OF ALL LABOR AND MATERIALS (EXCEPT ADHESIVE) FOR GRINDING AND FOR SURFACE PREPARATION, CRACK PREPARATION, CAPPING, INJECTION OF ADHESIVE, ALL SAMPLING AND TESTING, REMOVAL OF CAPPING MATERIAL AND PORTS, AND OTHER INCIDENTALS. CRACKS SHALL BE MEASURED FOR PAVEMENT ALONG THE LENGTH OF THE VISIBLE SURFACE CRACK.

PRICE BID FOR ITEM NO. 604-10.58, EPOXY INJECTION (INJECTION), GAL, SHALL INCLUDE COST FOR ADHESIVE MATERIAL INJECTED ONLY.

NO PAYMENT SHALL BE MADE FOR REWORK DEEMED NECESSARY BY FAILURE OF ADHESIVE SAMPLES OR CORE SAMPLES.

ALL WORK INCLUDING SAMPLING AND TESTING SHALL BE IN THE PRESENCE OF THE ENGINEER OR HIS REPRESENTATIVE OR CONTRACT INSPECTORS. ANY WORK DONE WITHOUT INSPECTORS PRESENT SHALL NOT BE PAID FOR. THE CONTRACTOR SHALL PROVIDE THE ENGINEER WITH WEEKLY SCHEDULES OF WORK TO BE PERFORMED. SCHEDULES SHALL BE SUBMITTED AT LEAST THREE (3) DAYS IN ADVANCE OF WORK TO BE DONE. THE ENGINEER SHALL BE NOTIFIED OF ANY CHANGE IN THE SCHEDULE A MINIMUM OF TWENTY-FOUR (24) HOURS IN ADVANCE OF CHANGE.

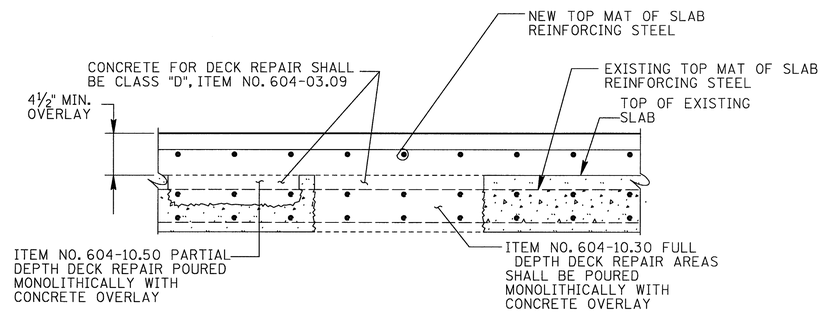

DETAIL SHOWING FULL AND PARTIAL DEPTH DECK REPAIR

NOTE: CONCRETE FOR DECK REPAIR SHALL BE POURED MONOLITHICALLY WITH NEW 4½" CONCRETE OVERLAY. THE COST OF THE CONCRETE BELOW THE SCARIFICATION LEVEL TO BE INCLUDED UNDER ITEM NO. 604-10.30 OR 604-10.50.

NOTE: ITEM NO. 604-10.30 AND 604-10.50 SHALL BE BID WITH THE CONTINGENCY THAT THESE ITEMS MAY BE INCREASED, DECREASED OR ELIMINATED AS DIRECTED BY THE ENGINEER.

UNOFFICIAL SET

NOT FOR BIDDING

STATE OF TENNESSEE
DEPARTMENT OF TRANSPORTATION
BUREAU OF HIGHWAYS

REPAIR DETAILS
STATE ROUTE 2
OVER
LITTLE DUCK RIVER
BRIDGE NO. 16-SR002-13.68 RT. & LT.
COFFEE COUNTY
2013

DESIGNED BY	WAP	DATE	7-12
DRAWN BY	MLP	DATE	7-12
SUPERVISED BY	WAP	DATE	7-12
CHECKED BY	JCP	DATE	8-12

BR-114-81

✳ 4'-0" +/- @ B.O.B. LEFT LANE
4'-0" +/- @ B.O.B. RIGHT LANE
5'-6" +/- @ E.O.B. LEFT LANE
6'-0" +/- @ E.O.B. RIGHT LANE

PROJECT NO.	YEAR	SHEET NO.
16003-4241-04	2013	

REVISIONS

NO.	DATE	BY	BRIEF DESCRIPTION

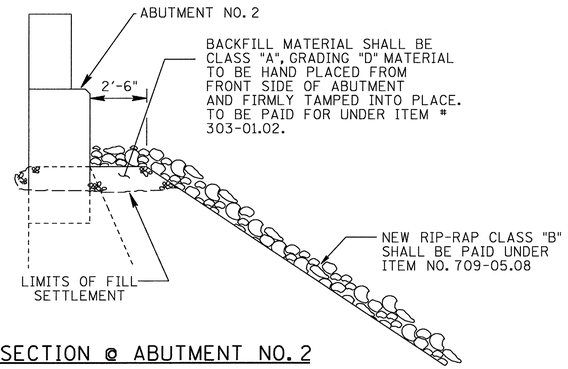

TYPICAL SECTION @ ABUTMENT NO. 2

(R.L. ℄ L.L. BRIDGE)

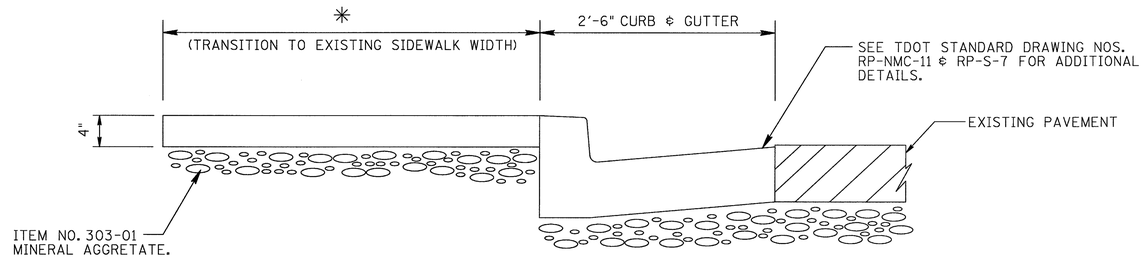

SECTION "SW1-SW1"

UNOFFICIAL SET

NOT FOR BIDDING

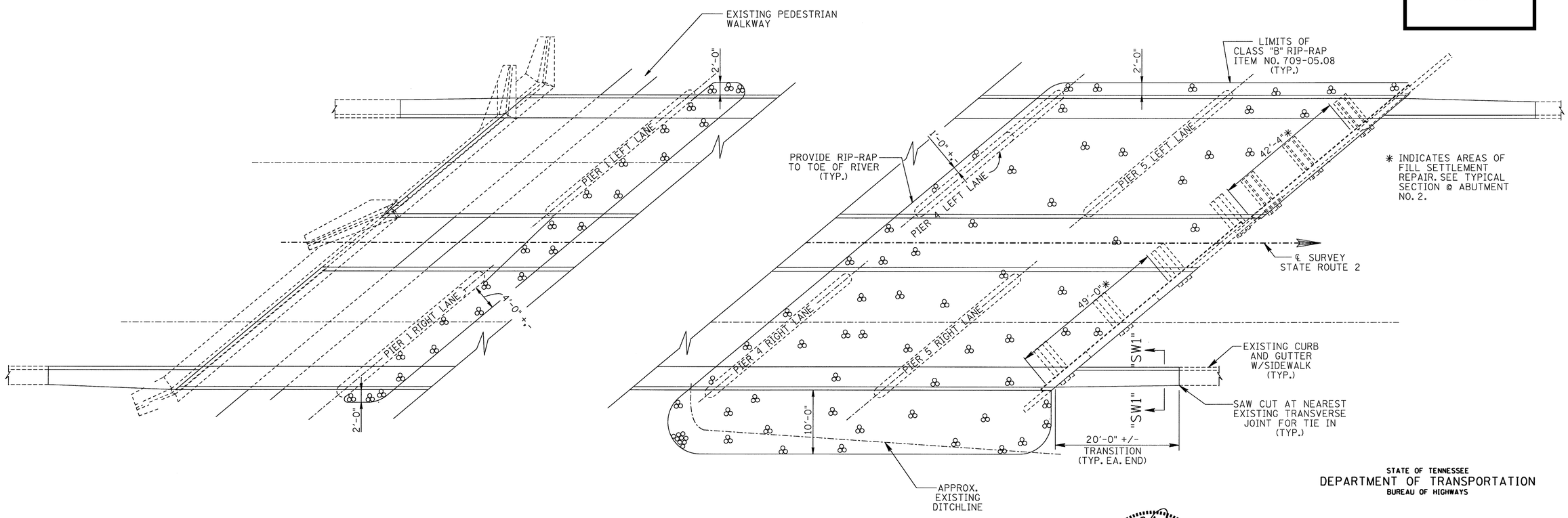

RIP-RAP PLACEMENT AND SIDEWALK TIE-IN

STATE OF TENNESSEE
DEPARTMENT OF TRANSPORTATION
BUREAU OF HIGHWAYS

LUTHER A. PETRONE
REGISTERED ENGINEER
AGRICULTURE
05-31-13
NO. 13774
STATE OF TENNESSEE

EMBANKMENT AND SIDEWALK DETAILS
STATE ROUTE 2
OVER
LITTLE DUCK RIVER
BRIDGE NO. 16-SR002-13.68
COFFEE COUNTY
2013

DESIGNED BY	WAP	DATE	7-12
DRAWN BY	MLP	DATE	7-12
SUPERVISED BY	WAP	DATE	7-12
CHECKED BY	JCP	DATE	8-12

BR-114-82