PROJECT NO.	YEAR	SHEET NO.
79005-4167-04	2014	

REVISIONS

NO.	DATE	BY	BRIEF DESCRIPTION

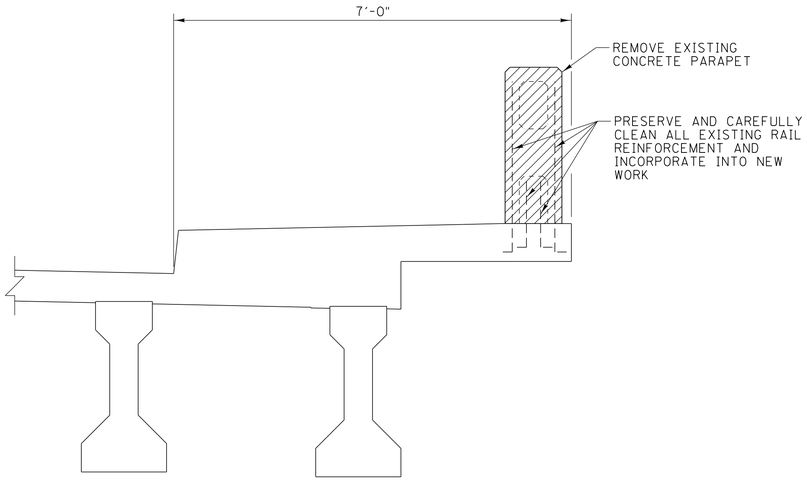

SIDEWALK DEMOLITION
(SHOWN FOR NORTH SIDE, TWO LOC.)
SCALE: ¾" = 1'-0"

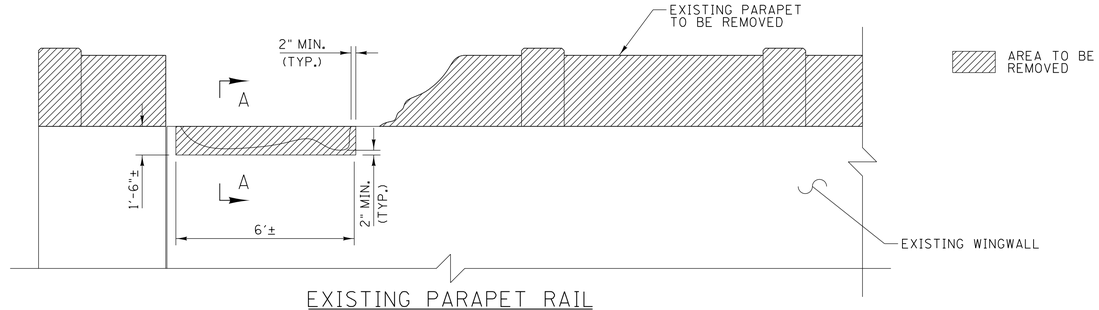

EXISTING PARAPET RAIL
(SHOWN AT WINGWALL LOCATION)
SCALE: ⅜" = 1'-0"

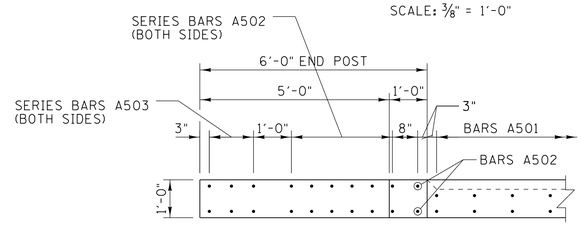

PLAN VIEW (END POST)
(SHOWN FOR SIDEWALK LOC., WINGWALL LOC. SIMILAR)
SCALE: ½" = 1'-0"

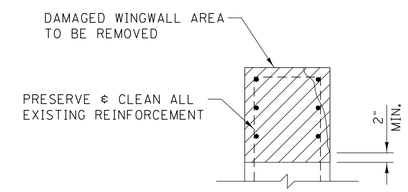

SECTION A-A (DEMOLITION)
(SHOWN FOR SOUTH SIDE, TWO LOC.)
SCALE: ¾" = 1'-0"

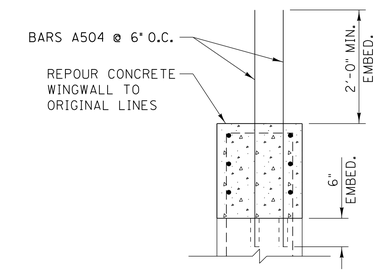

SECTION A-A (CONSTRUCTION)
(SHOWN FOR SOUTH SIDE, TWO LOC.)
SCALE: ¾" = 1'-0"

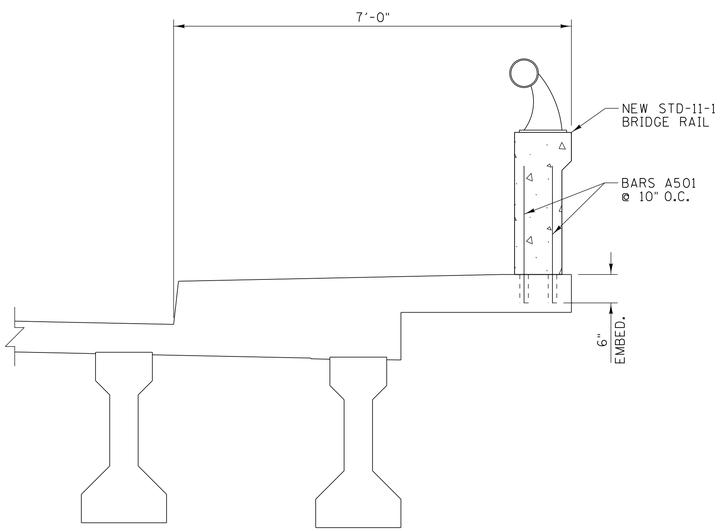

SIDEWALK CONSTRUCTION
(SHOWN FOR NORTH SIDE, TWO LOC.)
SCALE: ¾" = 1'-0"

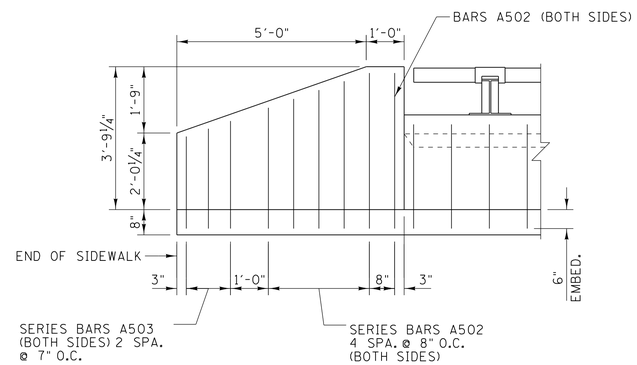

ELEVATION (END POST)
(SHOWN FOR SIDEWALK LOC., WINGWALL LOC. SIMILAR)
SCALE: ½" = 1'-0"

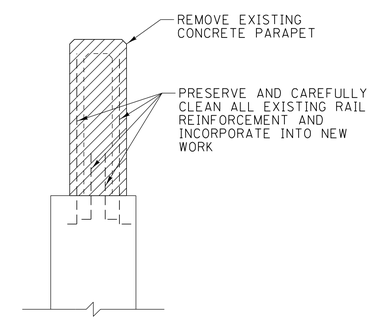

PARAPET DEMOLITION
(SHOWN FOR SOUTH SIDE, TWO LOC.)
SCALE: ¾" = 1'-0"

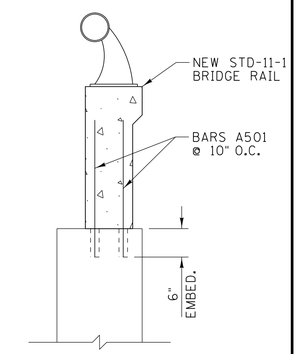

PARAPET CONSTRUCTION
(SHOWN FOR SOUTH SIDE, TWO LOC.)
SCALE: ¾" = 1'-0"

☞ FOR MORE DETAILS REGARDING END POST DIMENSIONS AND REINFORCEMENT, SEE STD. DWG. NO. STD-11-1.

☞ DOWEL BARS A501, A502 AND A503 TO REPLACE BARS A570E ON STD. DWG. NO. STD-11-1.

☞ BARS SHOWN TO BE EMBEDDED INTO EXISTING SIDEWALK SHALL BE SECURED USING HILTI HIT RE500 EPOXY ANCHOR OR APPROVED EQUAL. ALL BARS SHALL BE EMBEDDED TO DEPTH SHOWN ON DETAILS THIS SHEET AND EPOXY ANCHOR SHALL BE INSTALLED IN STRICT ACCORDANCE WITH MANUFACTURER'S INSTRUCTIONS. HOLES FOR EMBEDDED BARS SHALL BE DRILLED ¼" LARGER IN DIAMETER THAN THE BAR.

0.00

BILL OF STEEL

PARAPET REINFORCEMENT

BARS	SIZE	NO. REQ'D	BENDING DIMENSIONS A	B	C	D	LENGTH
A501	5	410					3'-0"
A502	5	8	LENGTH VARIES FROM 3'-2" TO 4'-1" IN INCREMENTS OF 2¼"± (5 REQ'D.)				18'-2"
A503	5	8	LENGTH VARIES FROM 2'-5" TO 2'-10" IN INCREMENTS OF 1½" (3 REQ'D.)				7'-11"
A504	5	12					4'-0"

NOTES:
ALL BAR DIMENSIONS ARE OUT-TO-OUT.

ALL DIMENSIONS SHALL BE FIELD VERIFIED BY CONTRACTOR PRIOR TO FABRICATION.

NOTES:

WHEN REMOVING EXISTING DETERIORATED CONCRETE PARAPET RAIL FOR THE FULL LENGTH OF THE BRIDGE AND WINGWALLS (BOTH SIDES), CARE SHALL BE TAKEN SO AS NOT TO DAMAGE EXISTING REINFORCING STEEL PROJECTING VERTICALLY FROM THE SIDEWALK OR WINGWALL. ALL OF THE EXPOSED EXISTING REINFORCEMENT SHALL BE PRESERVED.

NO LIVE LOAD SHALL BE PERMITTED ON THE EXISTING SIDEWALKS ADJACENT TO NEW PARAPETS AND END POST UNTIL CONCRETE TEST SPECIMENS REACH A COMPRESSIVE STRENGTH OF 3,500 PSI.

PNEUMATIC HAMMERS FOR CONCRETE REMOVAL AS SHOWN ON DETAIL THIS DRAWING SHALL BE LIMITED TO THE 60 LB. CLASS.

COST OF REMOVING EXISTING DETERIORATED CONCRETE PARAPETS, FORMING, HIGH EARLY STRENGTH CONCRETE, REINFORCING STEEL AND ALL MATERIALS AND LABOR NECESSARY FOR REPAIRS AS SHOWN IN THESE DETAILS TO BE INCLUDED IN ITEM NO. 620-05, CONCRETE PARAPET WITH STRUCTURAL TUBING, L.F.

COST OF REINFORCING STEEL AND EPOXY ANCHORS TO BE INCLUDED IN ITEM NO. 620-05, CONCRETE PARAPET WITH STRUCTURAL TUBING, L.F.

STATE OF TENNESSEE
DEPARTMENT OF TRANSPORTATION

BRIDGE REPAIRS DETAILS

SOUTH PARKWAY WEST
OVER INTERSTATE 55
BRIDGE NO. 79-02807-0.00

SHELBY COUNTY
2014

AMJAD S. KHAIRI
REGISTERED ENGINEER
COMMERCE
No. 106650
STATE OF TENNESSEE
01/21/14

GARVER

DESIGNED BY	L. I. COBOS	DATE	JULY 2013
DRAWN BY	C. W. THOMAS	DATE	JULY 2013
SUPERVISED BY	A. J. KHAIRI	DATE	JULY 2013
CHECKED BY	A. J. KHAIRI	DATE	JULY 2013

TN D.O.T. ENGINEERING SUPERVISOR M. LAWSON

BR-115-55

LiCobos 1/21/2014 12:29:19 PM
WORKSPACE: TDOT Bridge
L:\2010\00763\- TDOT - Bridge Repair over Interstate 55\Drawings\BRG\Final\10-BR-115-55.dgn