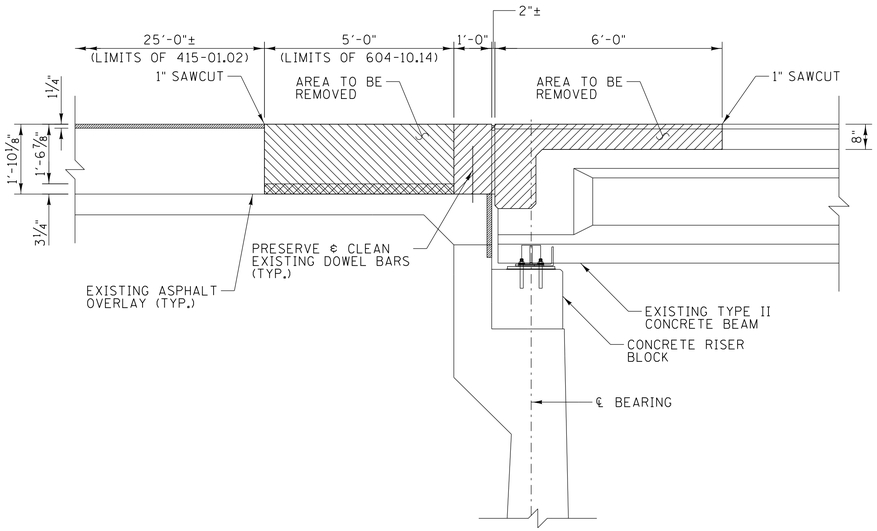

SECTION A-A
(SHOWN FOR ABUTMENT NO. 1, ABUTMENT NO. 2 SIMILAR)
SCALE: ½" = 1'-0"

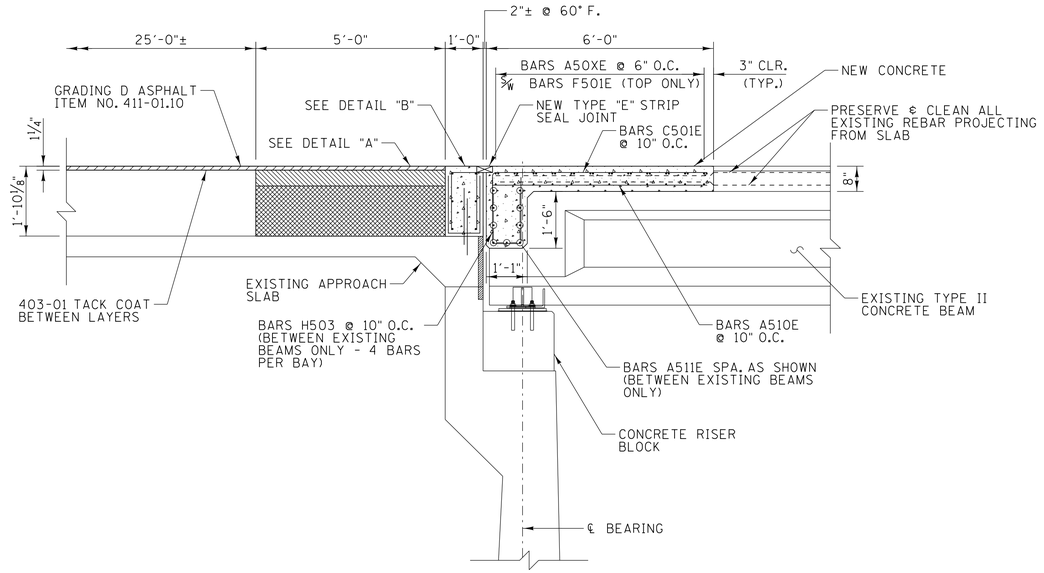

SECTION B-B
(SHOWN FOR ABUTMENT NO. 1, ABUTMENT NO. 2 SIMILAR)
SCALE: ½" = 1'-0"

STRIP SEAL EXPANSION JOINT REPLACEMENT

(TYP. @ BOTH ABUTMENTS)

PROJECT NO.	YEAR	SHEET NO.
79005-4167-04	2014	

REVISIONS

NO.	DATE	BY	BRIEF DESCRIPTION

NOTES:

FOR LOCATIONS OF SECTIONS A-A & B-B, SEE SHEET NO. BR-115-57

ALL COSTS ASSOCIATED WITH THE REMOVAL OF THE EXISTING WEARING SURFACE SHALL BE PAID FOR UNDER ITEM NO. 604-10.14, REMOVE EXISTING WEARING SURFACE, LS.

ALL COSTS OF LABOR, MATERIAL, EQUIPMENT AND INCIDENTALS REQUIRED TO REMOVE CONCRETE FILLER BLOCKS AND END DIAPHRAGMS SHALL BE INCLUDED IN ITEM NO. 604-10.42, CONCRETE REPAIRS, C.F.

ALL COSTS OF LABOR, MATERIAL AND INCIDENTALS TO FORM AND POUR NEW HIGH EARLY STRENGTH CONCRETE FOR THE NEW CONCRETE FILLER BLOCKS AND END DIAPHRAGMS SHALL BE INCLUDED UNDER ITEM NO. 604-10.42, CONCRETE REPAIRS, C.F.

COST OF PRESERVING AND CLEANING EXISTING REINFORCING STEEL AS WELL AS PLACING NEW REINFORCING STEEL SHALL BE PAID FOR UNDER ITEM NO. 604-10.18, REINFORCING STEEL (REPAIRS), LB. THIS ITEM NUMBER WILL ALSO BE USED TO PAY FOR ALL COSTS ASSOCIATED WITH THE EPOXY ANCHOR SYSTEM USED FOR DOWEL BARS.

☞ ALL DIMENSIONS TAKEN FROM ORIGINAL CONSTRUCTION PLANS. CONTRACTOR SHALL FIELD VERIFY ALL DIMENSIONS PRIOR TO CONSTRUCTION.

☞ BARS SHOWN TO BE EMBEDDED INTO EXISTING APPROACH SLAB SHALL BE SECURED USING HILTI HIT RE500 EPOXY ANCHOR OR APPROVED EQUAL. ALL BARS SHALL BE EMBEDDED TO DEPTH SHOWN ON DETAILS THIS SHEET AND EPOXY ANCHOR SHALL BE INSTALLED IN STRICT ACCORDANCE WITH MANUFACTURER'S INSTRUCTIONS. HOLES FOR EMBEDDED BARS SHALL BE DRILLED ¼" LARGER IN DIAMETER THAN THE BAR.

✳ NOTE:

THE CONTRACTOR SHALL PROFILE THE TOP OF NEW CONCRETE FILLER BLOCKS AND END DIAPHRAGMS TO MATCH EXISTING SLOPE. SEE REFERENCE DWG. NOS. BR-52-10-Z THRU BR-52-29-Z, BR-5-53 THRU BR-5-59, AND K-36-15 THRU K-36-23 FOR ADDITIONAL DETAILS. ALSO PRIOR TO REMOVAL OF THE CONCRETE FILLER BLOCKS AND END DIAPHRAGMS, THE CONTRACTOR SHALL SURVEY THE EXISTING SLOPE @ 10' O.C. AND MATCH THE SLOPE IN THE NEW CONSTRUCTION. COST TO BE INCLUDED UNDER ITEMS BID ON.

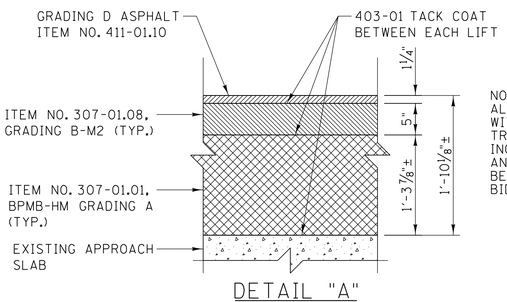

NOTES:
ALL COSTS ASSOCIATED WITH PREPARATION OF TRANSITION AREA, INCLUDING SAWCUTTING AND REMOVAL SHALL BE INCLUDED IN ITEMS BID ON.

DETAIL "A"
(SHOWN FOR ABUTMENT NO. 1, ABUTMENT NO. 2 SIMILAR)
SCALE: 1" = 1'-0"

NOTES:

① ALL CONCRETE POURS SHALL BE WELL CONSOLIDATED BEHIND AND AROUND THE EXPANSION JOINT STEEL RETAINER.

② SEE EXPANSION JOINT REPLACEMENT DETAIL, TYPE "E" ON STANDARD DRAWING NO. SBR-2-119. FOR FURTHER DETAILS AND NOTES, SEE STANDARD DRAWING NOS. SBR-2-115 AND SBR-2-116.

③ SET ALL EXPANSION JOINT REPLACEMENTS 2" (TWO INCHES) AT MID-TEMPERATURE OF 60°F. WITH A TOTAL MOVEMENT REQUIRED OF 4" (FOUR INCHES). ACTUAL SETTING AS PER TEMPERATURE CHART ON EXPANSION JOINT SHOP DRAWINGS.

④ SEE TYPE "X" MEMBRANE RETAINER WITH ELASTOMERIC SEAL AND NOTES ON STANDARD DRAWING NO. SBR-2-116. FOR ADDITIONAL DETAILS AND NOTES, SEE STANDARD DRAWING NOS. SBR-2-115 AND SBR-2-119.

⑤ FOR LEVELING BOLT ASSEMBLIES NOT SHOWN, SEE DETAILS ON STANDARD DRAWING NOS. SBR-2-116, AND SBR-2-119.

⑥ CONCRETE FOR ALL EXPANSION JOINT REPAIR AREAS TO BE HIGH EARLY STRENGTH CONCRETE, f'c=3500 PSI AT 28 DAYS.

⑦ COST OF EXPANSION JOINT ASSEMBLIES SHALL BE PAID FOR UNDER ITEM NO. 604-10.41, EXPANSION JOINT REPAIR (TYPE "E"), L.F.

⑧ COST OF INCIDENTALS SUCH AS WELDING, CLEANING, SAW CUTTING, DRILLING, ETC. AND MISCELLANEOUS MATERIALS NECESSARY TO COMPLETE THE INSTALLATION OF THE NEW EXPANSION JOINTS SHALL BE INCLUDED UNDER ITEMS BID ON.

BILL OF STEEL

BARS	SIZE	NO. REQ'D	BENDING DIMENSIONS A	B	C	D	LENGTH
A501E	5	30					13'-5"
A502E	5	60					20'-5"
A503E	5	60					39'-0"
A504E	5	30					40'-3"
A505E	5	112					6'-8"
A506E	5	8					10'-0"
A510E	5	249					5'-8"
A511E	5	171					3'-0"
✳A601E	6	120					4'-6"
A801	8	194					1'-6"
C501E	5	249	5'-8"	1'-0"			6'-8"
F501E	5	56	5'-0"	9"	1"		10'-9"
H501E	5	216	8"	1'-6"			3'-8"
H502E	5	282	8"	1'-3"			3'-2"
H503E	5	76	9"	1'-9"			4'-3"

NOTES:
ALL BAR DIMENSIONS ARE OUT-TO-OUT.
ALL DIMENSIONS SHALL BE FIELD VERIFIED BY CONTRACTOR PRIOR TO FABRICATION.
NUMBER OF BARS REQUIRED IS SHOWN FOR BOTH ABUTMENTS.
BARS ENDING IN "E" TO BE EPOXY COATED.
✳ THREADED FOR MECHANICAL COUPLER.

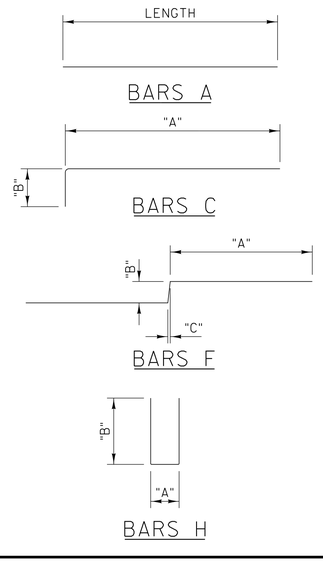

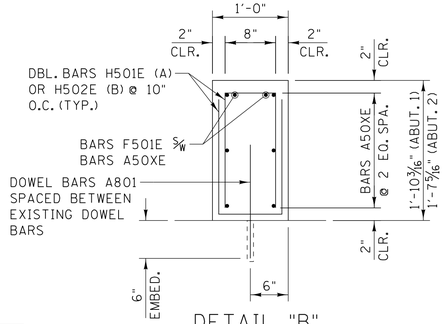

DETAIL "B"
(SHOWN FOR ABUTMENT NO. 1, ABUTMENT NO. 2 SIMILAR)
SCALE: 1" = 1'-0"

0.00

STATE OF TENNESSEE
DEPARTMENT OF TRANSPORTATION

BRIDGE REPAIRS DETAILS

SOUTH PARKWAY WEST
OVER INTERSTATE 55
BRIDGE NO. 79-02807-0.00

SHELBY COUNTY
2014

AMJAD S. KHAIRI, REGISTERED ENGINEER, CULTURE, AC NUMBER 106650, STATE OF TENNESSEE
01/21/14

GARVER

DESIGNED BY	L. I. COBOS	DATE	JULY 2013
DRAWN BY	C. W. THOMAS	DATE	JULY 2013
SUPERVISED BY	A. J. KHAIRI	DATE	JULY 2013
CHECKED BY	A. J. KHAIRI	DATE	JULY 2013

TN D.O.T. ENGINEERING SUPERVISOR _____

LICobos
WORKSPACE: TDOT Bridge
L:\2010\1001631- TDOT - Bridge Repair over Interstate 55\Drawings\BRG\FInal\13-BR-115-58.dgn
1/23/2014 9:11:19 AM