PROJECT NO.	YEAR	SHEET NO.
79005-4167-04	2014	

REVISIONS

NO.	DATE	BY	BRIEF DESCRIPTION

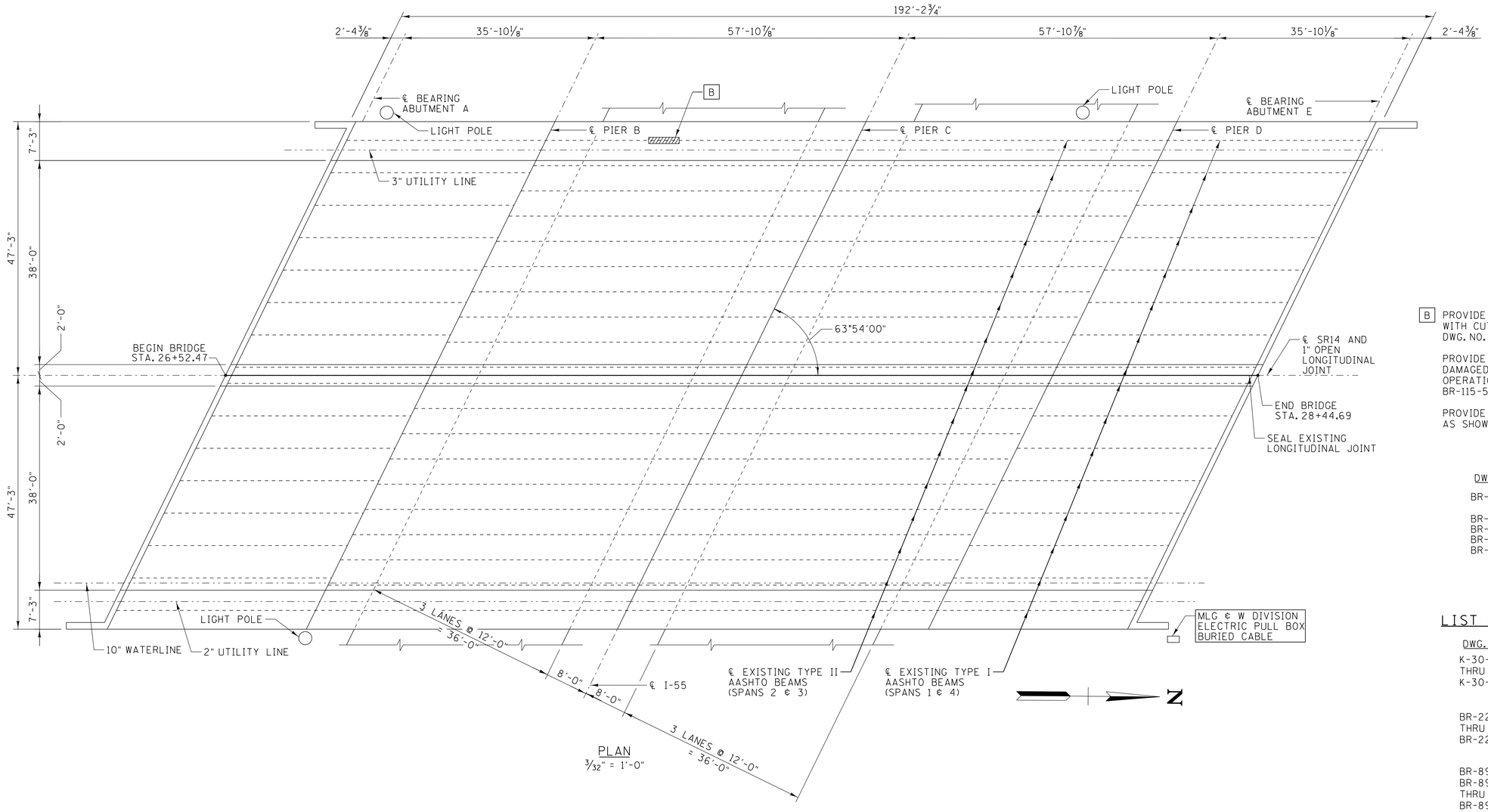

PLAN
3/32" = 1'-0"

SCOPE OF WORK

B PROVIDE BEAM REPAIR TO DAMAGED EXTERIOR BEAM WITH CUT STRANDS. FOR NOTES AND DETAILS, SEE DWG. NO. BR-115-52.

PROVIDE BRACING TO SUPPORT DAMAGED BEAM DURING REPAIR OPERATIONS. FOR NOTES AND DETAILS, SEE DWG. NO. BR-115-52.

PROVIDE TRAFFIC CONTROL FOR SOUTHBOUND TRAFFIC AS SHOWN ON SHEET NOS. 4-8.

LIST OF DRAWINGS

DWG. NO.	DRAWING
BR-115-47	LAYOUT OF BRIDGE TO BE REPAIRED (7.46)
BR-115-49	ESTIMATED QUANTITIES
BR-115-50	GENERAL NOTES
BR-115-51	BRIDGE REPAIR DETAILS
BR-115-52	BRIDGE REPAIR DETAILS

LIST OF REFERENCE DRAWINGS

DWG. NO.	DRAWING	
K-30-10 THRU K-30-18	ORIGINAL BRIDGE PLANS	BR# 7.46
BR-22-82 THRU BR-22-89	BRIDGE REPAIR PLANS	BR# 7.46
BR-89-53, BR-89-62 THRU BR-89-71	BRIDGE REPAIR PLANS	BR# 7.46

ALL REFERENCE DRAWINGS TO BE PRINTED WITH THE PLANS

7.46

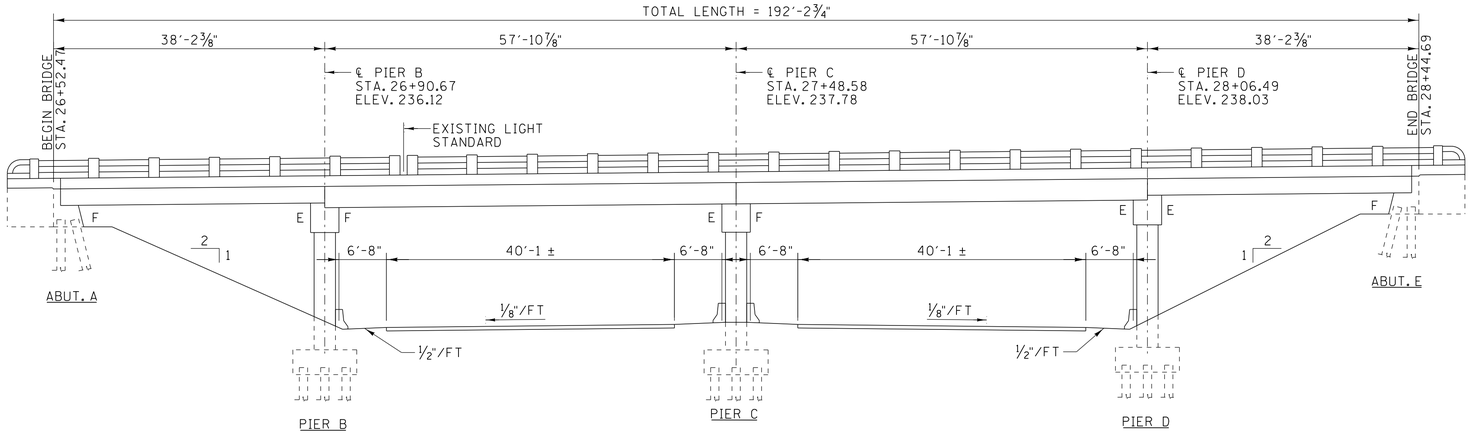

ELEVATION
3/32" = 1'-0"

STATE OF TENNESSEE
DEPARTMENT OF TRANSPORTATION

LAYOUT OF BRIDGE TO BE REPAIRED

SR14 OVER INTERSTATE 55
BRIDGE NO. 79-SR14-7.46

SHELBY COUNTY
2014

AMJAD S. KHAIRI
REGISTERED ENGINEER
COMMERCE
No. 106850
STATE OF TENNESSEE
01/21/14

GARVER

DESIGNED BY	L. I. COBOS	DATE	JULY 2013
DRAWN BY	K. T. BRESHEARS	DATE	JULY 2013
SUPERVISED BY	J.H. RUDDELL	DATE	JULY 2013
CHECKED BY	A. J. KHAIRI	DATE	JULY 2013

TN D.O.T. ENGINEERING SUPERVISOR M. LAWSON

LICobos 1/21/2014 1:29:17 PM
WORKSPACE: TDOT Bridge
L:\2010\100763\- TDOT - Bridge Repair over Interstate 55\Drawings\BRG\Final\04-BR-115-47.dgn