PROJECT NO.	YEAR	SHEET NO.
79005-4167-04	2014	

REVISIONS

NO.	DATE	BY	BRIEF DESCRIPTION

CONSTRUCTION PROCEDURE FOR REPAIRING DAMAGED PRESTRESSED BEAMS

1. PROVIDE TRAFFIC CONTROL SO AS TO CLOSE THE OUTSIDE LANE AS SHOWN ON DWG. NO. BR-115-51. ALSO SEE TRAFFIC CONTROL SHEET NOS. 4 THRU 8 FOR ADDITIONAL TRAFFIC CONTROL PLANS.
2. SAW CUT CONCRETE ½" TO OBTAIN SQUARE AREAS AND REMOVE PORTIONS OF THE PRESTRESSED BEAM AS SHOWN IN THESE PLANS TO INSURE THAT SOUND CONCRETE IS REACHED IN ALL AREAS.
3. ASSEMBLE SPLICE, LOCATING SPLICE SLEEVES AND STRAND GRIPS TO ALLOW SEATING OF THE STRAND GRIPS AND SUFFICIENT THREAD LENGTHS IN THE SPLICE SLEEVES.
4. TORQUE LUBRICATED SPLICE SLEEVE TO APPROXIMATELY 21,700 POUNDS. THE STRAND GRIPS MUST BE PREVENTED FROM ROTATION DURING TORQUING. SEE SINGLE STRAND SPLICE DETAIL ON THIS DWG. A TOTAL OF EIGHT (8) STRANDS ARE TO BE SPLICED; AT ONE (1) LOCATION. FOR LOCATION OF STRANDS TO BE REPAIRED. SEE DWG. NO. BR-115-47.
5. FORM AND POUR REPAIR AREA SHOWN ON THIS DWG. TO ORIGINAL BEAM LINES USING FC = 5000 PSI CONCRETE. AGGREGATE USED SHALL BE SIZE NO. 6 MAXIMUM. EXPOSED REINFORCEMENT BARS AND STRANDS SHALL BE CLEANED AS NEEDED.
6. THE ESTIMATED QUANTITIES REQUIRED FOR THIS PROJECT INCLUDE EIGHT (8) SPLICE ASSEMBLIES. APPROX. 50 L.F. OF 7/16" DIAMETER STRANDS AND 4 C.F. OF CONCRETE.

ESTIMATED QUANTITY

	ITEM	DESCRIPTION	UNIT	QUANTITY
1	604-10.42	CONCRETE REPAIRS	C.F.	4
2	604-10.69	PRESTRESSING STRAND SPLICE	EACH	8

1 INCLUDES COST OF ALL LABOR, MATERIAL AND EQUIPMENT TO REMOVE DAMAGED CONCRETE, POURING 4 C.F. OF NEW CONCRETE AT ONE LOCATION AS SHOWN ON DWG. NO. BR-115-47. THE EXACT LOCATIONS TO BE DETERMINED ON SITE BY TDOT ENGINEER. THE ENGINEER MAY INCREASE, DECREASE OR ELIMINATE THE QUANTITY FOR THIS ITEM.

2 INCLUDES ALL COSTS TO REPAIR DAMAGED PRESTRESSED STRANDS AT ONE LOCATION. EIGHT (8) SPLICE ASSEMBLIES AND APPROX. 50 L.F. OF 7/16" DIAMETER STRAND. THE EXACT LOCATION TO BE DETERMINED ON SITE BY TDOT ENGINEER. THE ENGINEER MAY INCREASE, DECREASE OR ELIMINATE THE QUANTITY FOR THIS ITEM.

GENERAL NOTES FOR EMERGENCY REPAIRS OF PRESTRESSED BEAM

1. THE BEAM REPAIR SHALL TAKE PLACE ON WEEKENDS ONLY.
2. TRAFFIC CONTROL SHALL BE AS SHOWN ON SHEET NOS. 4-8 OF THE TRAFFIC CONTROL PLANS.
3. ALL WORK IS TO BE DONE IN ACCORDANCE WITH THE STANDARD SPECIFICATIONS FOR ROAD AND BRIDGE CONSTRUCTION.
4. STRAND SPLICE ASSEMBLIES SHALL BE INSTALLED AND TORQUED IN ACCORDANCE WITH MANUFACTURER'S INSTRUCTIONS AND DETAILS ON THIS DWG. THE STRAND SPLICE ASSEMBLY SHALL BE A CABLE SPLICE APPROVED BY TENNESSEE DEPARTMENT OF TRANSPORTATION.
5. ASTM GRADE 270K, 7/16" DIAMETER 7 WIRE LOW RELAXATION STRANDS ARE TO BE USED FOR SPLICING EXISTING STRANDS. CONTRACTOR SHALL VERIFY THE SIZE OF EXISTING STRANDS PRIOR TO ORDERING. THE SIZE OF THE NEW STRANDS SHALL MATCH THE FIELD STRANDS.
6. CONCRETE WITH A COMPRESSIVE STRENGTH OF 5000 PSI SHALL BE USED TO REPAIR THE BEAM AS DETAILED ON THIS DWG. MAXIMUM SIZE OF AGGREGATE USED SHALL BE NO. 6. THE FORMS MAY BE STRIPPED AFTER THE CONCRETE HAS ATTAINED A COMPRESSIVE STRENGTH OF NOT LESS THAN 2500 PSI. A ½" SAW CUT SHALL BE REQUIRED AROUND ALL AREAS TO HAVE CONCRETE PLACED.
7. APPROVAL OF MATERIALS: NO FABRICATION SHALL BE STARTED UNTIL THE MATERIALS INVOLVED HAVE BEEN APPROVED BY THE TENNESSEE DEPARTMENT OF TRANSPORTATION, DIVISION OF MATERIALS AND TESTS.
8. NO RESTRICTIONS OF VERTICAL CLEARANCES WILL BE ALLOWED OVER I-40 AND/OR SAM COOPER BLVD. ON ANY TRAFFIC LANES.
9. PNEUMATIC HAMMERS HEAVIER THAN NOMINAL 35 POUND CLASS SHALL NOT BE USED TO REMOVE EXISTING CONCRETE. CHIPPING HAMMERS OF THE 15 POUND CLASS SHALL BE USED TO REMOVE CONCRETE FROM AROUND STRANDS AND REBAR IN THE BEAM.
10. SPECIAL CARE SHALL BE TAKEN SO AS TO NOT DAMAGE ANY EXISTING STRANDS OR REBAR DURING CONCRETE REMOVAL. IF DAMAGE OCCURS, THE ENGINEER SHALL INSPECT THE DAMAGE AND IF DETERMINED THAT THE CONTRACTOR'S OPERATION CAUSED THE DAMAGE, THE CONTRACTOR SHALL REPLACE OR REPAIR THE DAMAGED MEMBER AT NO ADDITIONAL COST.

SPECIAL NOTES REGARDING TEMPORARY SUPPORTS:

TWO TEMPORARY SUPPORTS WILL BE REQUIRED AT BEAM REPAIR LOCATIONS. TEMPORARY SUPPORTS SHALL BE CAPABLE OF SUPPORTING FULL LOADS (DEAD AND LIVE).

THE CONTRACTOR SHALL SUBMIT DETAILED WORKING DRAWINGS TO THE ENGINEER WHICH SHOW THE TEMPORARY SUPPORT SYSTEM. BY REVIEWING THESE DRAWINGS, THE ENGINEER SHALL ASSUME NO LIABILITY UPON HIMSELF OR THE STATE OF TENNESSEE, NOR SHALL THIS RELIEVE THE CONTRACTOR FOR THE SUFFICIENCY OF THE SUPPORT SYSTEM. THE TEMPORARY SUPPORT DRAWINGS SHALL INCLUDE SIZES, DIMENSIONS AND MATERIAL SPECIFICATIONS FOR ALL MEMBERS USED. THESE DRAWINGS SHALL BE REVIEWED BY THE ENGINEER BEFORE ANY TEMPORARY SUPPORT WORK IS STARTED.

COST OF TEMPORARY SUPPORT SHALL BE INCLUDED IN ITEM NO. 604-10.26, BRACING, EACH.

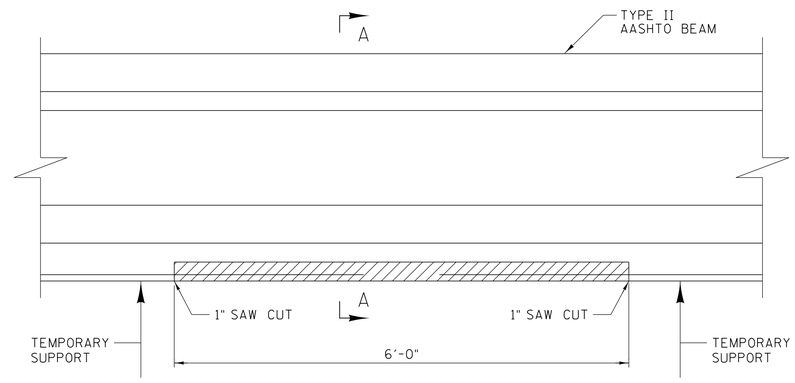

BEAM ELEVATION

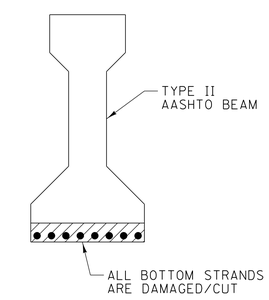

SECTION A-A

◒ ONE (1) SPLICE ASSEMBLY REQUIRED PER STRAND TO BE SPLICED. FOR NUMBER OF SPLICE ASSEMBLIES, SEE THIS DRAWING.

◪ ALL NEW STRANDS SHALL BE FIELD CUT IN LENGTHS AS REQUIRED.

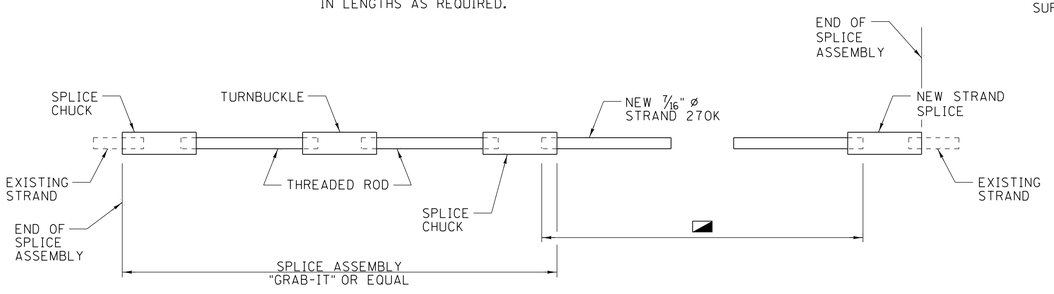

◒ STRAND SPLICE ASSEMBLY

7.46

STATE OF TENNESSEE
DEPARTMENT OF TRANSPORTATION

BRIDGE REPAIRS DETAILS

SR14 OVER INTERSTATE 55
BRIDGE NO. 79-SR14-7.46

SHELBY COUNTY
2014

AMJAD S. KHAIRI
REGISTERED ENGINEER
No. COMMISSION 106850
STATE OF TENNESSEE
01/21/14

GARVER

DESIGNED BY	L. I. COBOS	DATE	JULY 2013
DRAWN BY	C. W. THOMAS	DATE	JULY 2013
SUPERVISED BY	A. J. KHAIRI	DATE	JULY 2013
CHECKED BY	A. J. KHAIRI	DATE	JULY 2013

TN D.O.T. ENGINEERING SUPERVISOR _____

BR-115-52

LICobos 1/21/2014 1:29:18 PM
WORKSPACE: TDOT Bridge
L:\2010\1007163- TDOT - Bridge Repair over Interstate 55\Drawings\BRG\Final\07-BR-115-52.dgn