TYPE	YEAR	PROJECT NO.	SHEET NO.
R.O.W.	2012	BRZE-2600(37)	7
CONST.	2014	BRZE-2600(37)	7

FILE NO.

TENNESSEE D.O.T.
DESIGN DIVISION

STA. 16+11.04

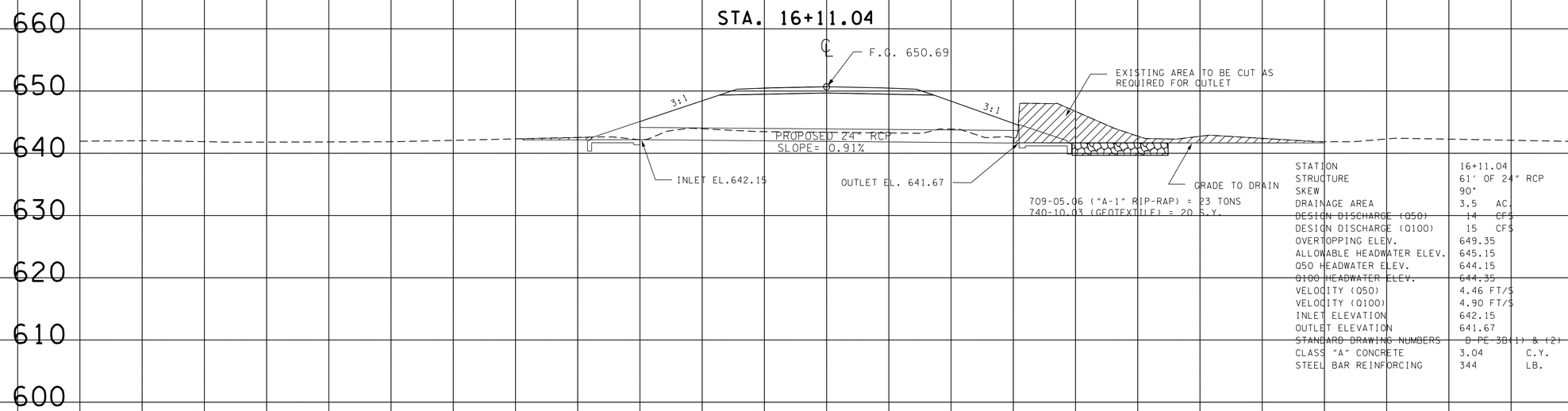

STATION	16+11.04	
STRUCTURE	61' OF 24" RCP	
SKEW	90°	
DRAINAGE AREA	3.5	AC.
DESIGN DISCHARGE (Q50)	14	CFS
DESIGN DISCHARGE (Q100)	15	CFS
OVERTOPPING ELEV.	649.35	
ALLOWABLE HEADWATER ELEV.	645.15	
Q50 HEADWATER ELEV.	644.15	
Q100 HEADWATER ELEV.	644.35	
VELOCITY (Q50)	4.46 FT/S	
VELOCITY (Q100)	4.90 FT/S	
INLET ELEVATION	642.15	
OUTLET ELEVATION	641.67	
STANDARD DRAWING NUMBERS	D-PE-3B(1) & (2)	
CLASS "A" CONCRETE	3.04	C.Y.
STEEL BAR REINFORCING	344	LB.

STA. 17+06.71

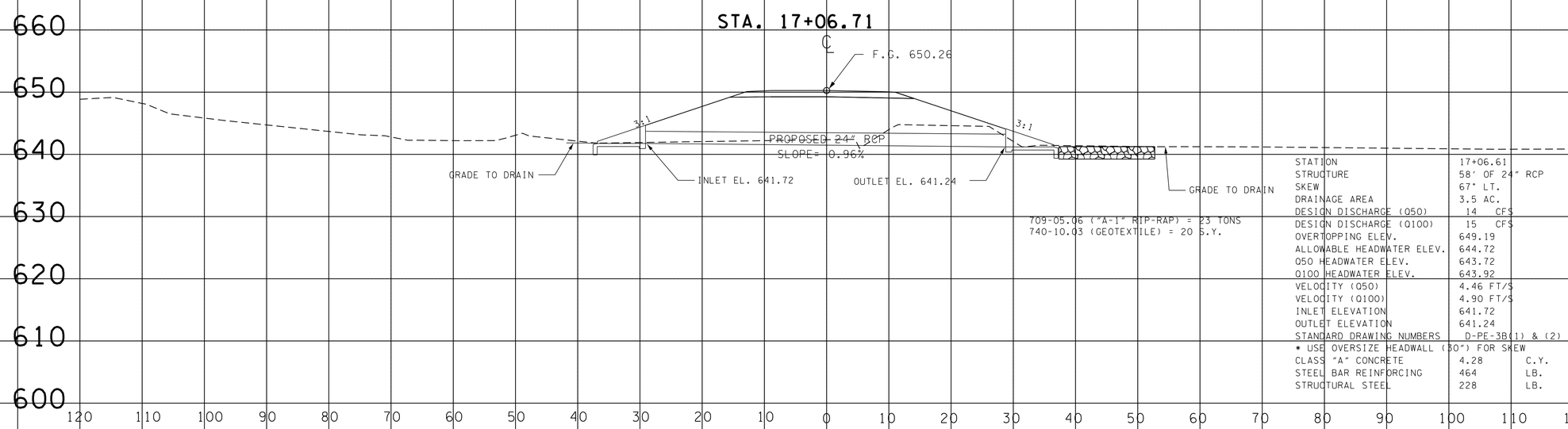

STATION	17+06.61	
STRUCTURE	58' OF 24" RCP	
SKEW	67° LT.	
DRAINAGE AREA	3.5 AC.	
DESIGN DISCHARGE (Q50)	14	CFS
DESIGN DISCHARGE (Q100)	15	CFS
OVERTOPPING ELEV.	649.19	
ALLOWABLE HEADWATER ELEV.	644.72	
Q50 HEADWATER ELEV.	643.72	
Q100 HEADWATER ELEV.	643.92	
VELOCITY (Q50)	4.46 FT/S	
VELOCITY (Q100)	4.90 FT/S	
INLET ELEVATION	641.72	
OUTLET ELEVATION	641.24	
STANDARD DRAWING NUMBERS	D-PE-3B(1) & (2)	
* USE OVERSIZE HEADWALL (30") FOR SKEW		
CLASS "A" CONCRETE	4.28	C.Y.
STEEL BAR REINFORCING	464	LB.
STRUCTURAL STEEL	228	LB.

SEALED BY

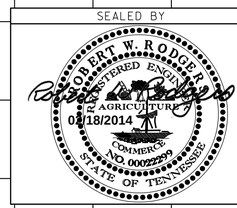

STATE OF TENNESSEE
DEPARTMENT OF TRANSPORTATION

CULVERT CROSS-SECTIONS

SCALE: 1"=10 ' HORIZ.
1"=10' VERT.

11-FEB-2014 11:15
\\JJ02WF01.tdot.state.tn.us\02Shared\Design County Folders\Franklin\Leon Stephens Road\consultant\FRLeonStephens- 7.sht