TYPE	YEAR	PROJECT NO.	SHEET NO.
R.O.W.	2012	BRZE-2600(37)	2
CONST.	2014	BRZE-2600(37)	2C

TENNESSEE D.O.T.
DESIGN DIVISION
FILE NO.

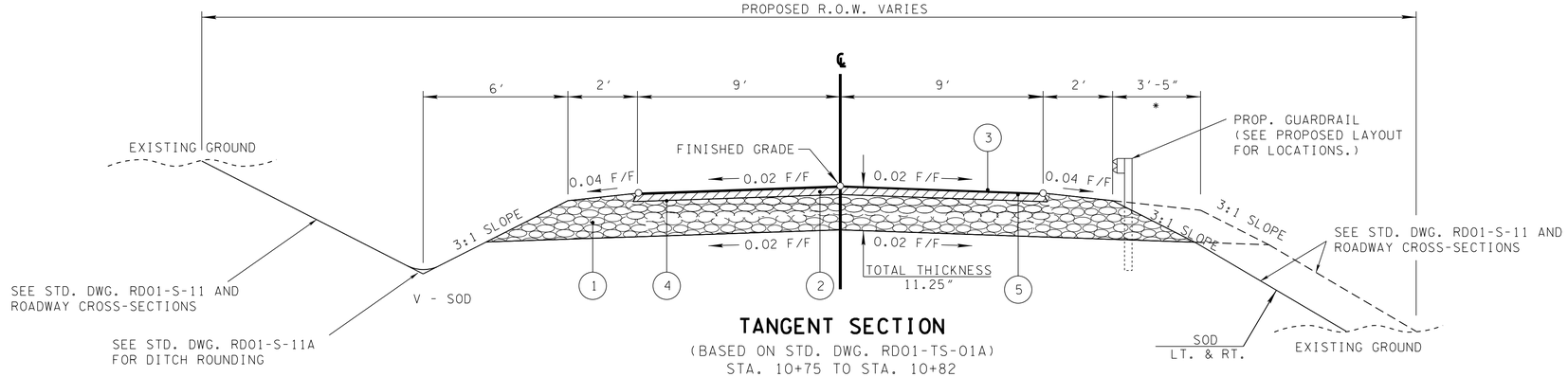

TANGENT SECTION

(BASED ON STD. DWG. RD01-TS-01A)
STA. 10+75 TO STA. 10+82
STA. 13+32 TO STA. 16+39
STA. 20+91.50 TO STA. 21+28.28

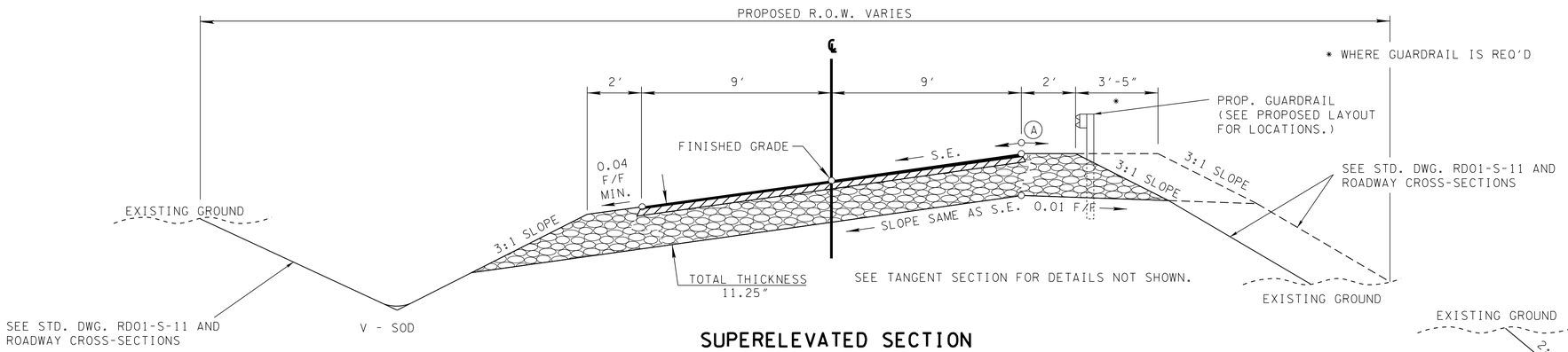

SUPERELEVATED SECTION

(BASED ON STD. DWG. RD01-TS-01A)
STA. 10+82 TO STA. 13+32
STA. 16+39 TO STA. 20+91.50

(A) THE SLOPES OF THE SHOULDER AND ROADWAY PAVEMENT SHALL NOT EXCEED AN ALGEBRAIC DIFFERENCE OF 0.07 FOOT PER FOOT.

FIELD ENTRANCES

SURFACE - 1½″ ±
BINDER - NONE
BASE - 4″ ±

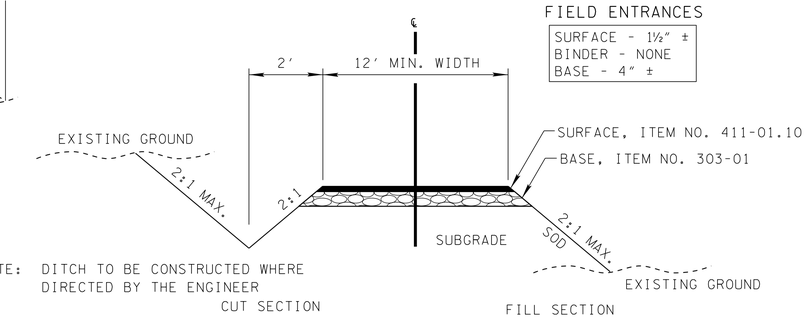

TYPICAL SECTION

FIELD ENTRANCE

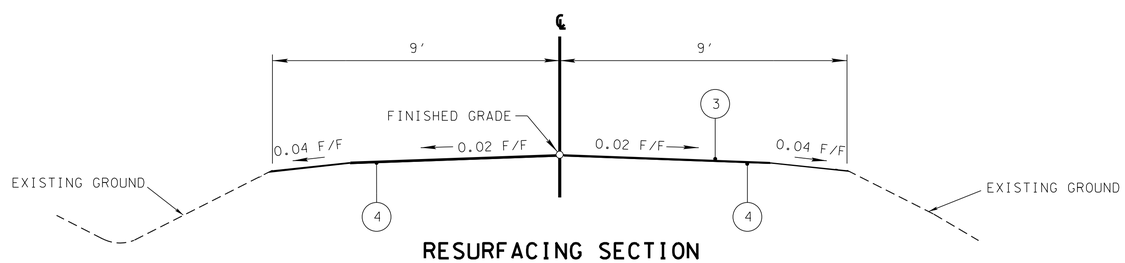

RESURFACING SECTION

(BASED ON STD. DWG. RD01-TS-01A)
STA. 21+28.28 TO STA. 24+78.82

PROPOSED PAVEMENT SCHEDULE

(1) MINERAL AGGREGATE BASE STONE 8″ (2.03 TONS/C.Y.) 303-01 MINERAL AGGREGATE, TYPE A BASE, GRADING D	(3) SURFACE 1.25″ (APPROX. 132.5 LB./S.Y.) 411-01.10 ACS MIX (PG64-22) GRADING D	(5) 403-01 BITUMINOUS MATERIAL FOR TACK COAT (TC) 0.07 GAL./S.Y.
(2) BITUMINOUS BINDER 2″ (APPROX. 226 LB./S.Y.) 307-01.08 PERF GR (PG64-22):(BPMB-HM)GR B-M2	(4) 402-01 BITUMINOUS MATERIAL FOR PRIME COAT (PC) (0.30-0.35 GAL./TON) 402-02 AGGREGATE FOR COVER MATERIAL (PC) (8-12 LB./S.Y.)	

SEALED BY

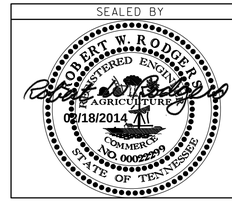

STATE OF TENNESSEE
DEPARTMENT OF TRANSPORTATION

TYPICAL SECTIONS

11-FEB-2014 11:11
\\JJ02WF01.tdot.state.tn.us\02Shared\Design County Folders\Franklin\Leon Stephens Road\consultant\FRLeonStephens- 02C.sht