TYPE	YEAR	PROJECT NO.	SHEET NO.
R.O.W.	2012	BRZE-2600(37)	11
CONST.	2014	BRZE-2600(37)	13

FILE NO.

TENNESSEE D.O.T.
DESIGN DIVISION

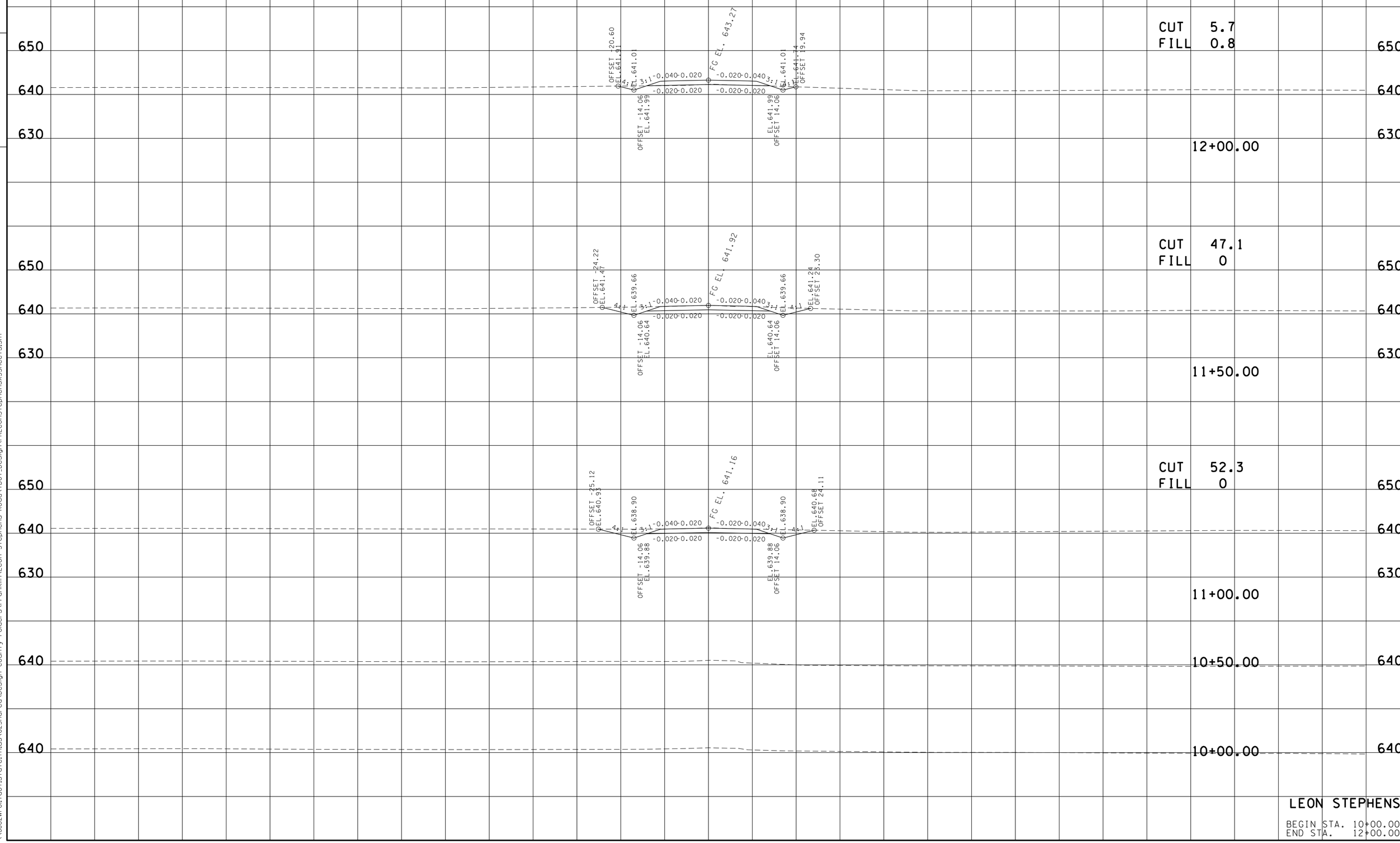

LEON STEPHENS

BEGIN STA. 10+00.00
END STA. 12+00.00

11-FEB-2014 11:18
\\JJ02WF01.tdot.state.tn.us\02Shared\Design County Folders\Franklin\Leon Stephens Road\TDOT_Design\FRLeonStephensXSSheets.SHT

TYPE	YEAR	PROJECT NO.	SHEET NO.
R.O.W.	2012	BRZE-2600(37)	12
CONTS.	2014	BRZE-2600(37)	14

FILE NO.

TENNESSEE D.O.T.
DESIGN DIVISION

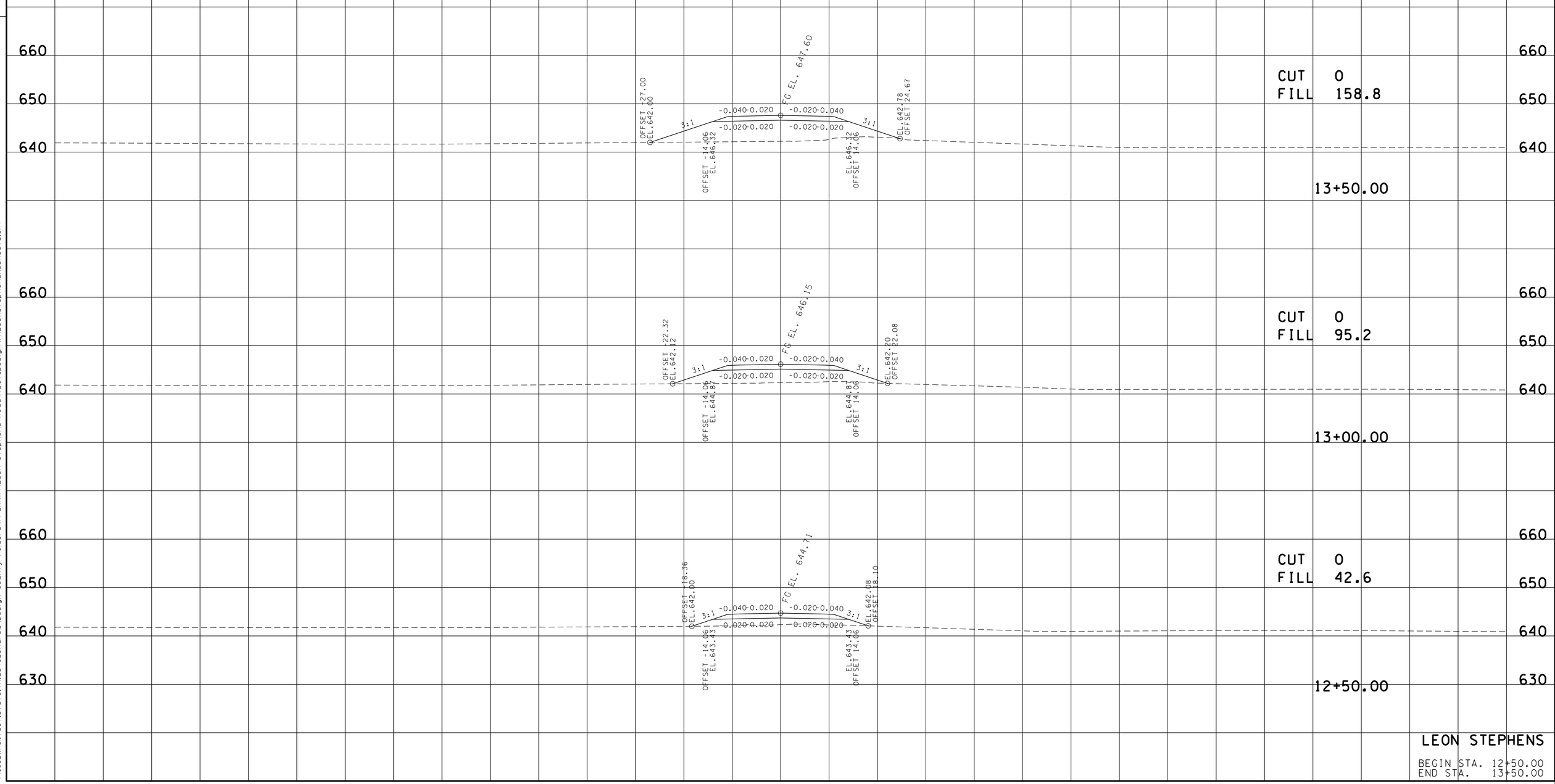

LEON STEPHENS

BEGIN STA. 12+50.00
END STA. 13+50.00

11-FEB-2014 11:18
\\JJ02WF01.tdot.state.tn.us\02Shared\Design County Folders\Franklin\Leon Stephens Road\TDOT_Design\FRLeonStephensXSSheets.SHT

TYPE	YEAR	PROJECT NO.	SHEET NO.
R.O.W.	2012	BRZE-2600(37)	13
CONST.	2014	BRZE-2600(37)	15

TENNESSEE D.O.T.
DESIGN DIVISION
FILE NO.

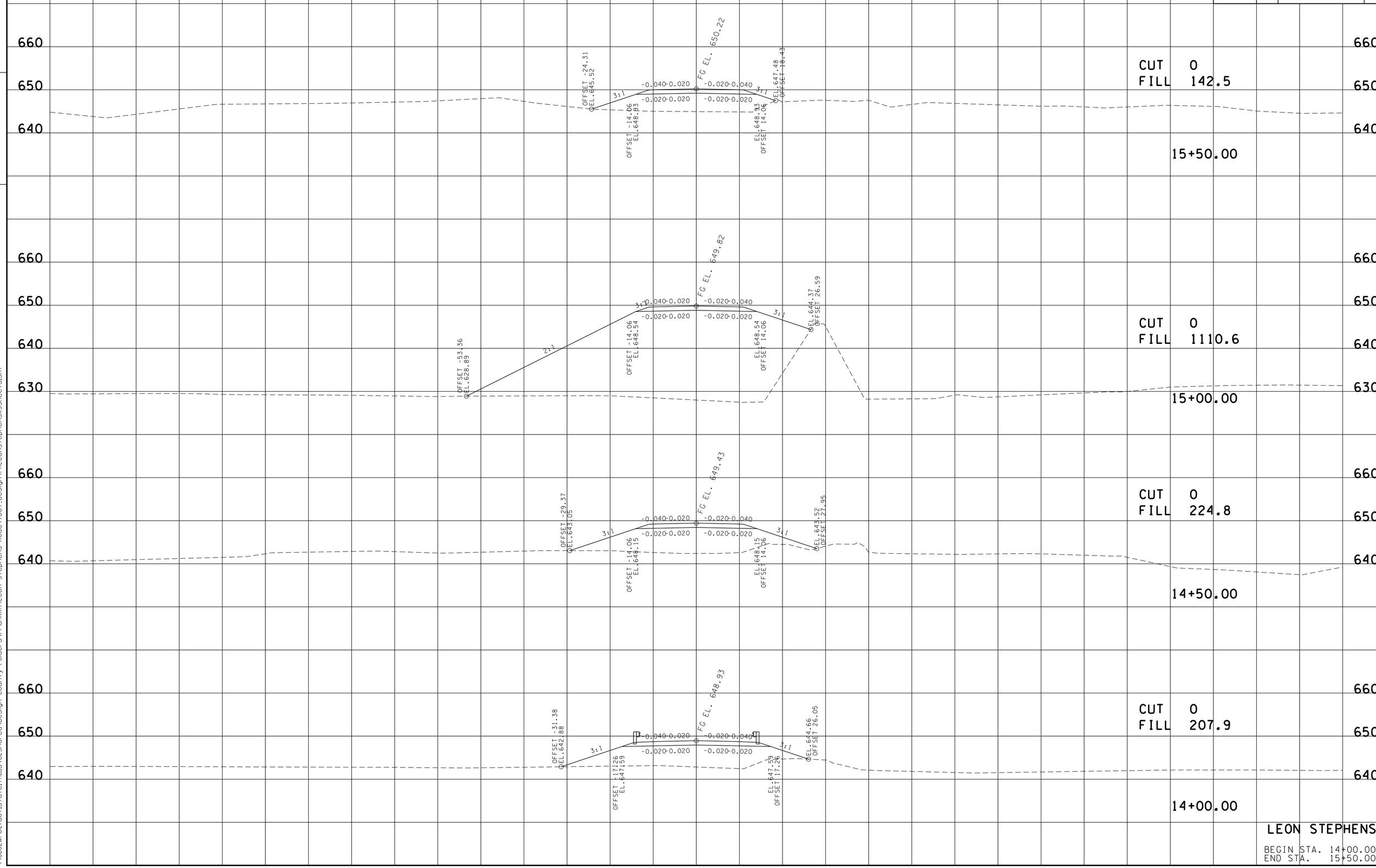

LEON STEPHENS

BEGIN STA. 14+00.00
END STA. 15+50.00

11-FEB-2014 14:18
\\JJ02WF01.tdot.state.tn.us\02Shared\Design County Folders\Franklin\Leon Stephens Road\TDOT_Design\FRLeonStephensXSSheets.SHT

TYPE	YEAR	PROJECT NO.	SHEET NO.
R.O.W.	2012	BRZE-2600(37)	14
CONST.	2014	BRZE-2600(37)	16

TENNESSEE D.O.T.
DESIGN DIVISION
FILE NO.

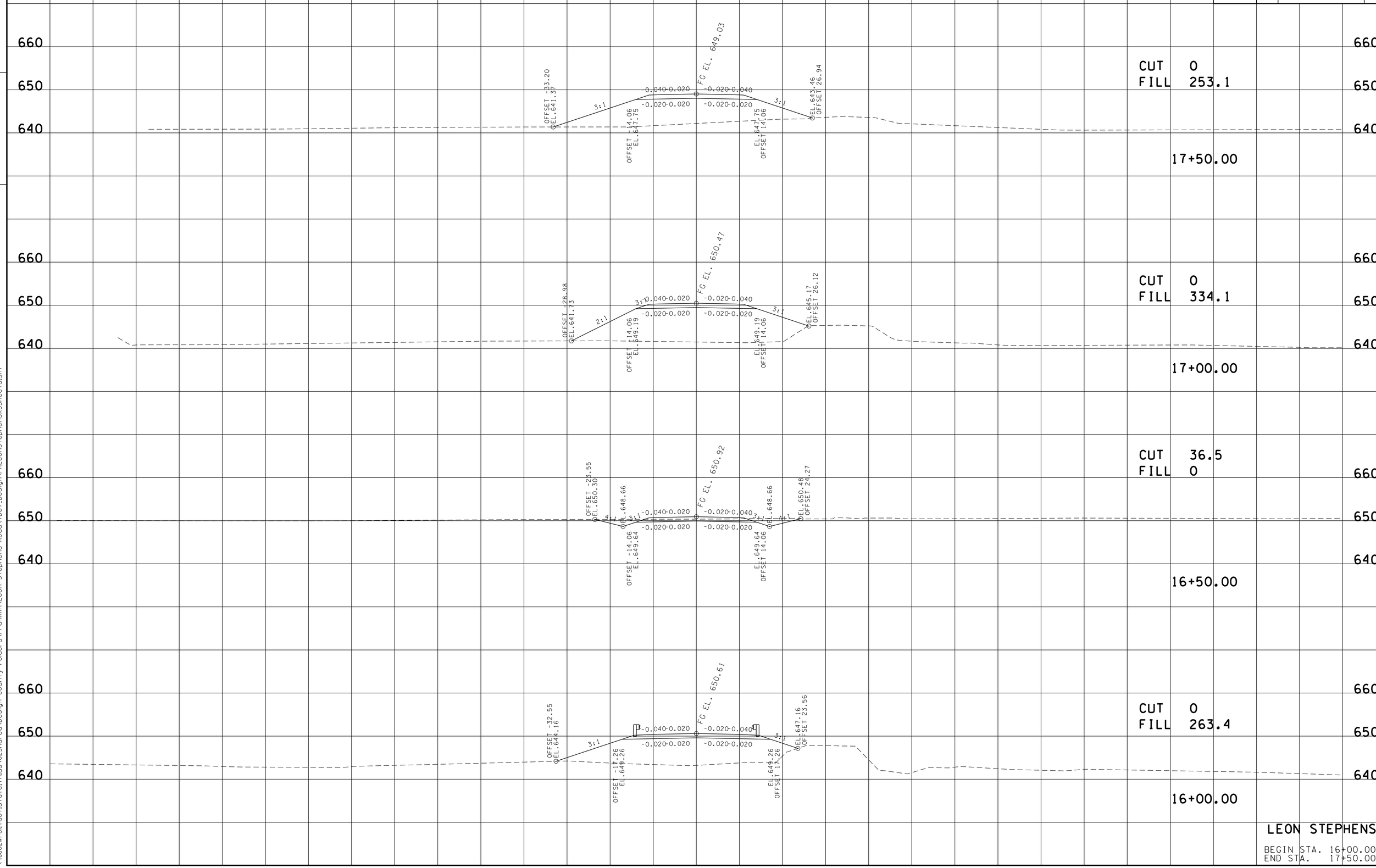

LEON STEPHENS

BEGIN STA. 16+00.00
END STA. 17+50.00

11-FEB-2014 14:18
\\JJ02WF01.tdot.state.tn.us\02Shared\Design County Folders\Franklin\Leon Stephens Road\TDOT_Design\FRLeonStephensXSSheets.SHT

TYPE	YEAR	PROJECT NO.	SHEET NO.
R.O.W.	2012	BRZE-2600(37)	15
CONST.	2014	BRZE-2600(37)	17

TENNESSEE D.O.T.
DESIGN DIVISION
FILE NO.

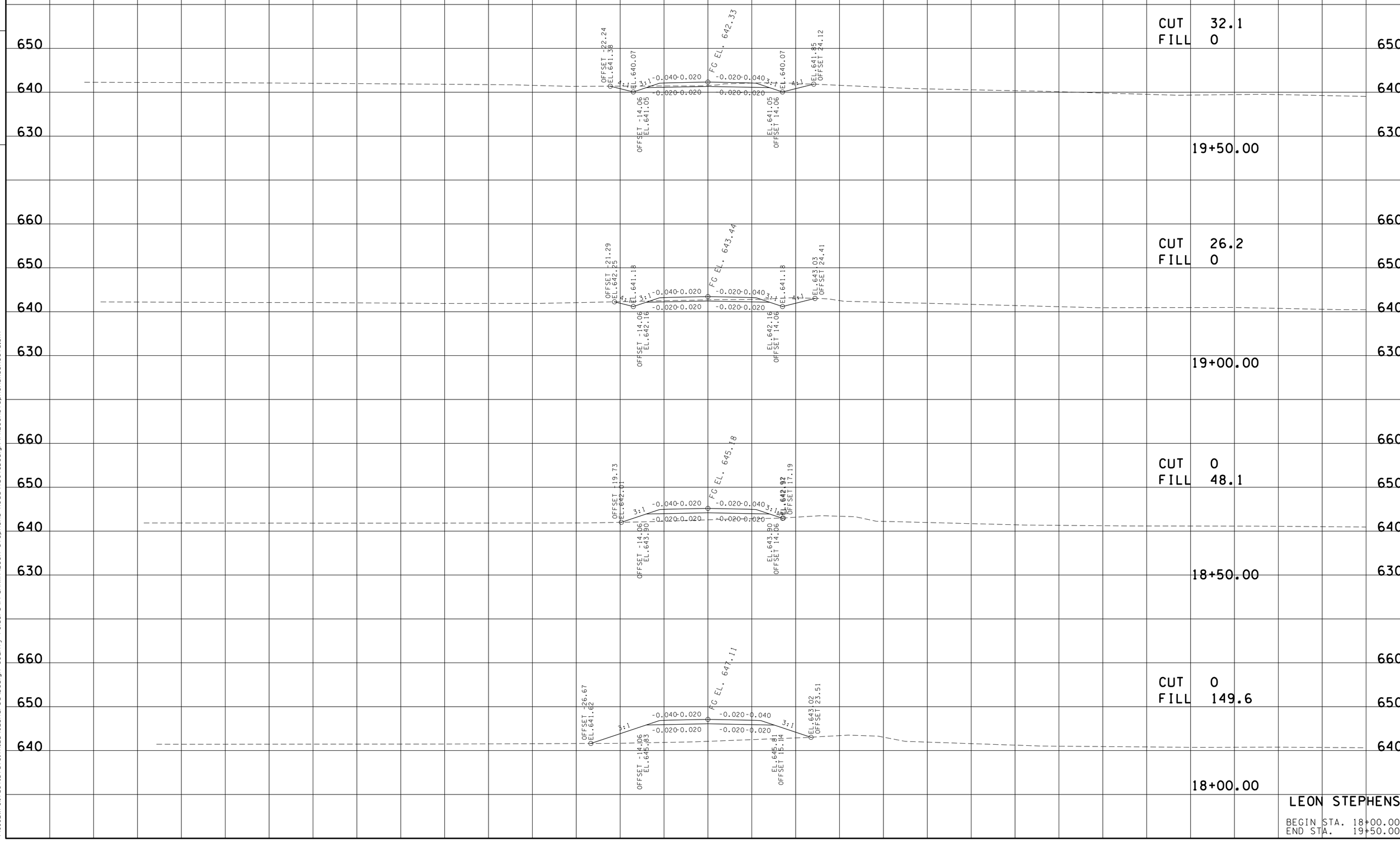

LEON STEPHENS

BEGIN STA. 18+00.00
END STA. 19+50.00

11-FEB-2014 14:18
\\JJ02WF01.tdot.state.tn.us\02Shared\Design County Folders\Franklin\Leon Stephens Road\TDOT_Design\FRLeonStephensXSSheets.SHT

TYPE	YEAR	PROJECT NO.	SHEET NO.
R.O.W.	2012	BRZE-2600(37)	16
CONST.	2014	BRZE-2600(37)	18

TENNESSEE D.O.T.
DESIGN DIVISION
FILE NO.

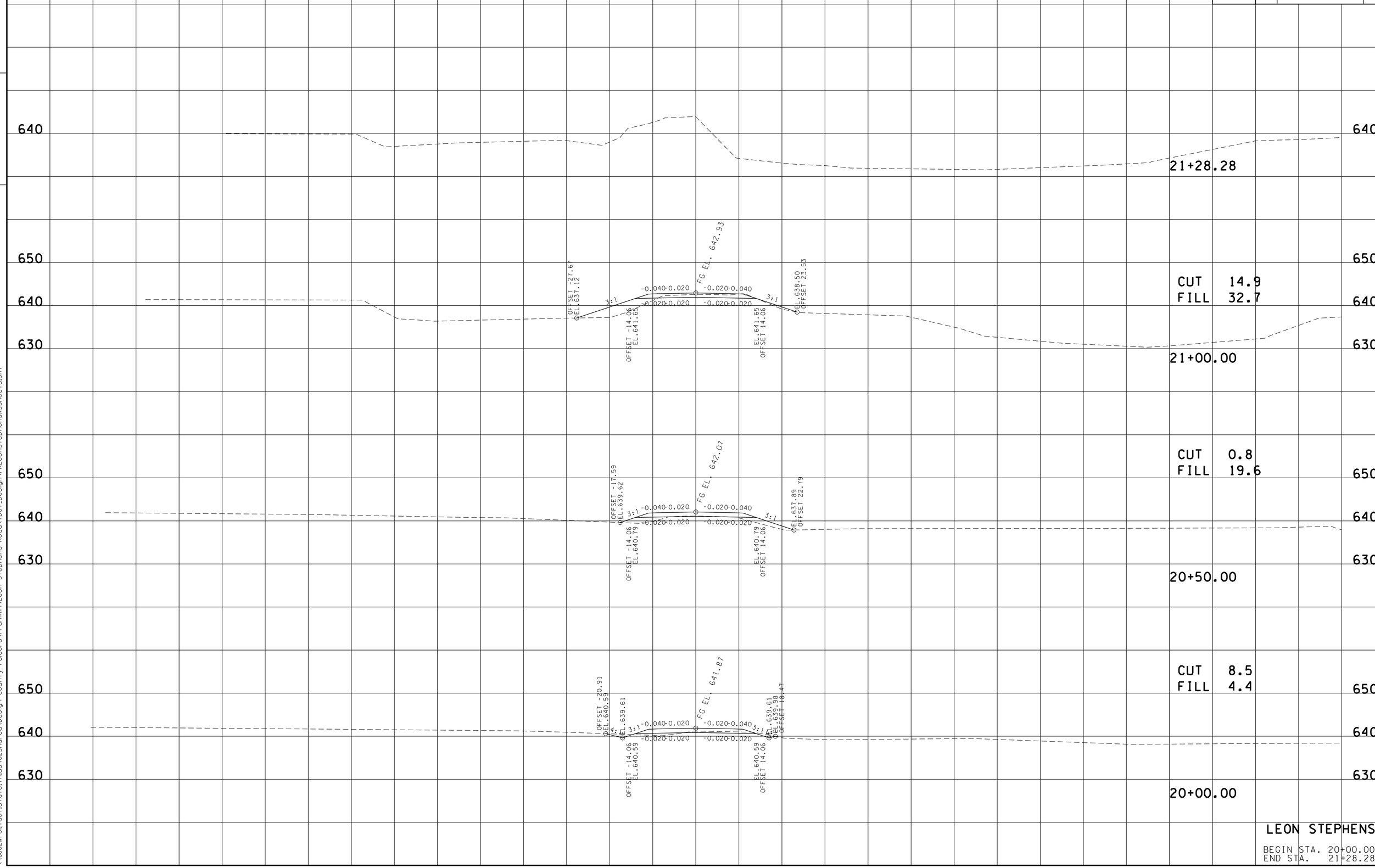

LEON STEPHENS

BEGIN STA. 20+00.00
END STA. 21+28.28

11-FEB-2014 14:18
\\JJ02WF01.tdot.state.tn.us\02Shared\Design County Folders\Franklin\Leon Stephens Road\TDOT_Design\FRLeonStephensXSSheets.SHT

TYPE	YEAR	PROJECT NO.	SHEET NO.
CONST.	2014	BRZE-2600(37)	19

TENNESSEE D.O.T.
DESIGN DIVISION

FILE NO.

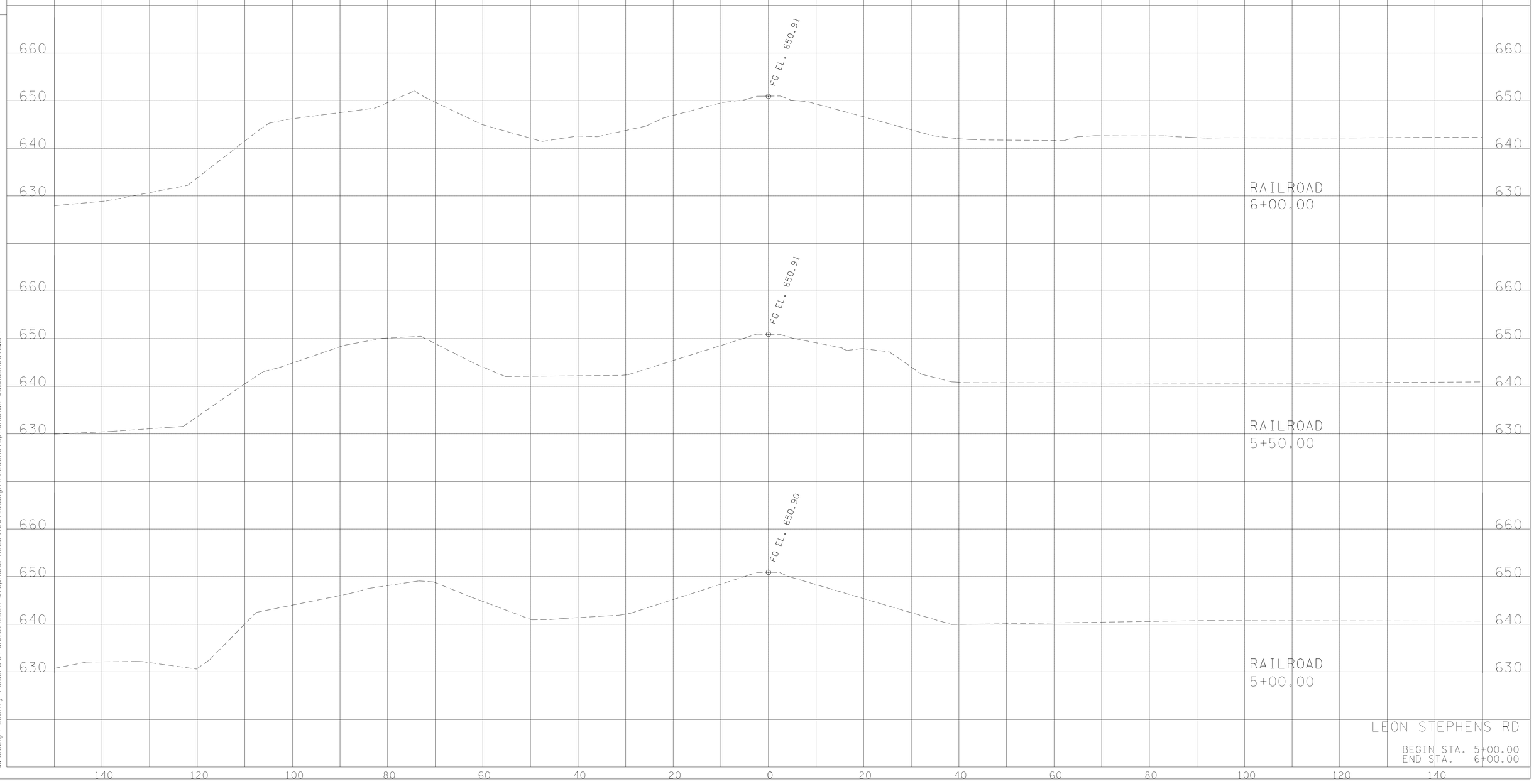

LEON STEPHENS RD

BEGIN STA. 5+00.00
END STA. 6+00.00

2/11/2014 1:11:03 PM
M:\Design County Folders\Franklin\Leon Stephens Road\TDOT_Design\FRLeonStephensRailroadXSSheets.sht

TYPE	YEAR	PROJECT NO.	SHEET NO.
CONST.	2014	BRZE-2600(37)	20

FILE NO.

TENNESSEE D.O.T.
DESIGN DIVISION

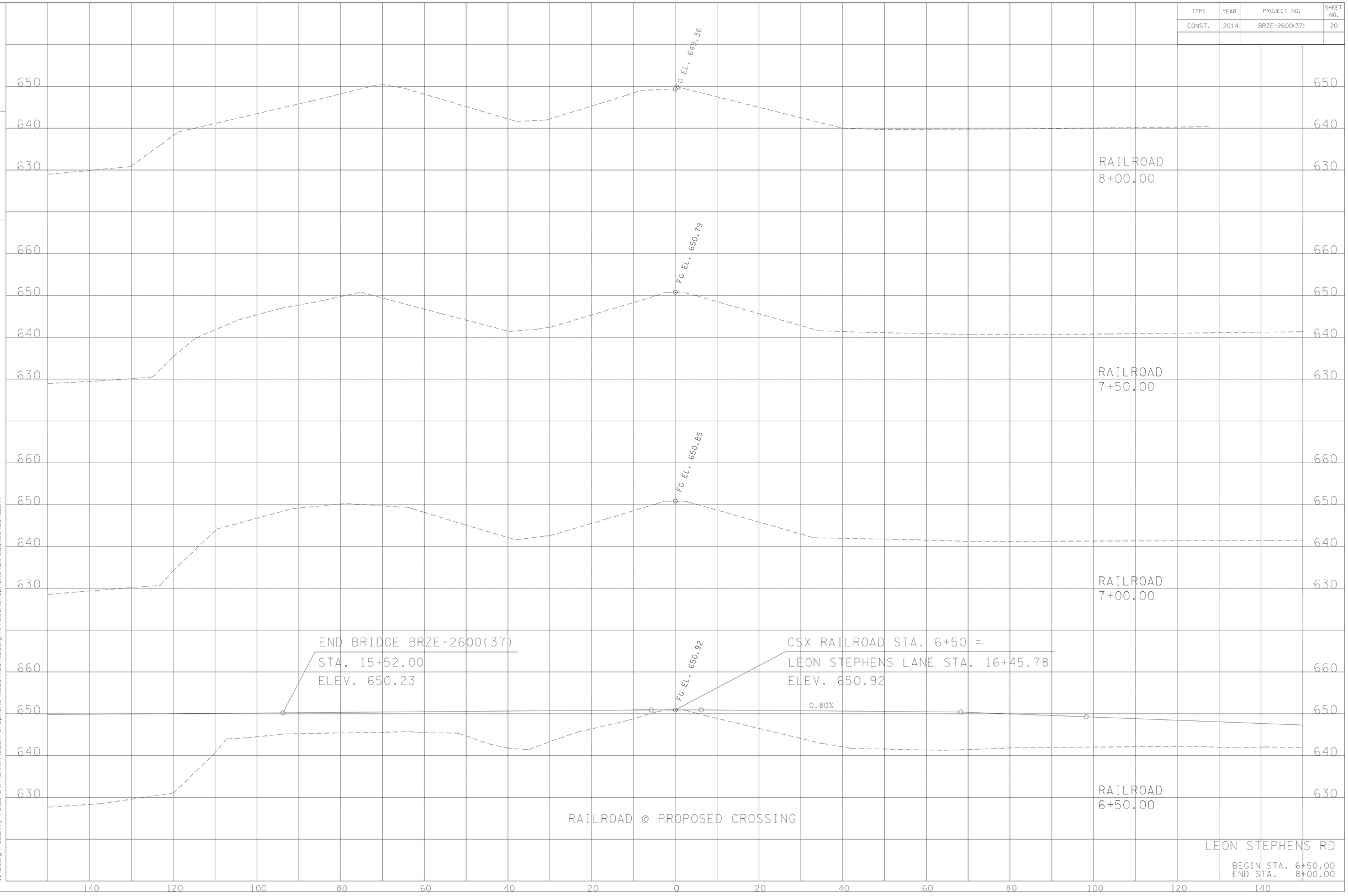

2/11/2014 1:11:37 PM
M:\Design County Folders\Franklin\Leon Stephens Road\TDOT_Design\FRLeonStephensRailroadXSSheets.sht