PROJECT NO.	YEAR	SHEET NO.
07100-4136-04	2014	

REVISIONS

NO.	DATE	BY	BRIEF DESCRIPTION

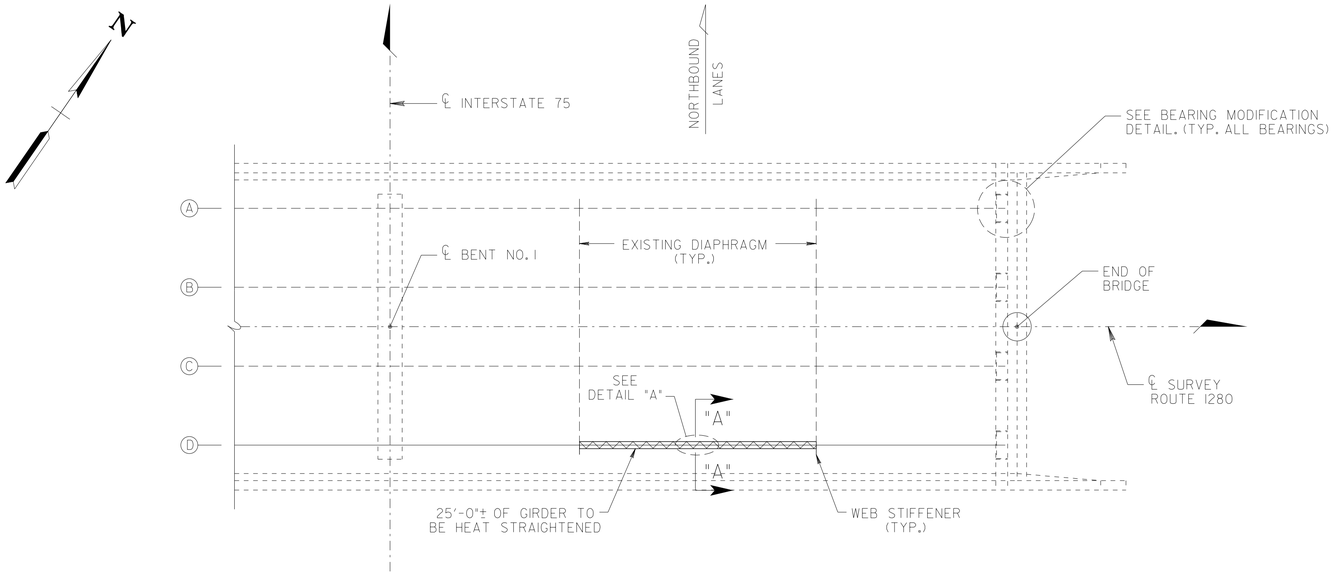

PART-PLAN

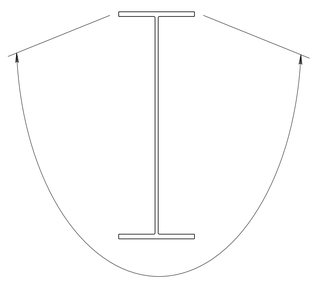

LIMITS OF GIRDER TO BE PAINTED

(IN AREAS OF REPAIR)

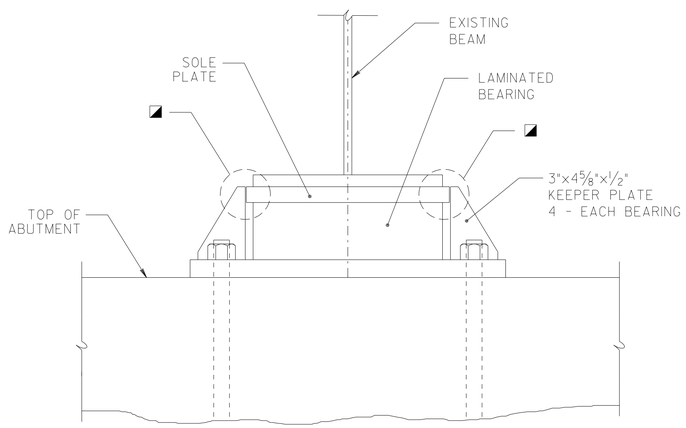

BEARING MODIFICATION DETAIL

(EXTERIOR BEARING SHOWN, INTERIOR BEARING SIMILAR)

◪ DENOTES: CONTRACTOR TO REMOVE WELDS, GRIND SMOOTH, SEPARATING KEEPER PLATE FROM SOLE PLATE TO ALLOW FOR LONGITUDINAL MOVEMENT. TOUCH-UP EXPOSED AREAS WITH PAINT. (TYP. 4 PLATES PER BEARING LOCATION).

STRUCTURAL STEEL REPAIRS FOR HEAT STRAIGHTENING OF DAMAGED STRUCTURAL STEEL

DESCRIPTION: THIS ITEM SHALL CONSIST OF HEAT STRAIGHTENING THE DAMAGED PORTIONS OF THE EXISTING BRIDGE COMPONENTS AS SHOWN ON THE PLANS. HEAT STRAIGHTENING SHALL BE ACCOMPLISHED IN ACCORDANCE WITH AASHTO ARTICLE 11.4.7 (DIVISION II- CONSTRUCTION).

THE REPAIRS SHALL BE PERFORMED UNDER THE DIRECT SUPERVISION OF A PERSON WHO SHALL PRESENT WRITTEN DOCUMENTATION PRIOR TO BEGINNING WORK OF HIS SUCCESSFUL HEAT STRAIGHTENING EXPERIENCES WITH COMPARABLE BRIDGE COMPONENTS. THIS PERSON SHALL POSSESS THE KNOWLEDGE AND EXPERIENCE TO APPLY THE HEAT IN SUCH A MANNER, SEQUENCE AND AMOUNT THAT THE FINAL STRAIGHTENED MEMBER RETAINS AS LITTLE RESIDUAL STRESS AS POSSIBLE. HEAT SHALL BE APPLIED AT OR BELOW 1200 DEGREES FAHRENHEIT AND MONITORED WITH CONTACT THERMOMETERS, PYROMETRIC STICKS OR OTHER INDICATING DEVICES. THESE HEAT INDICATING DEVICES SHALL BE SUPPLIED BY THE CONTRACTOR AND MADE AVAILABLE TO THE INSPECTOR AT ALL TIMES. FORCED COOLING IS NOT PERMITTED. THE STRAIGHTENING SHALL BE ACCOMPLISHED WITH AS LITTLE MECHANICAL FORCE AS POSSIBLE.

TOLERANCES SHALL MEET REQUIREMENTS AS SHOWN IN SECTION 3.5 OF THE AWS STRUCTURAL WELDING CODE.

ALL WELDING SHALL BE PERFORMED BY AWS CERTIFIED WELDER.

NOTE: COST OF ALL LABOR, EQUIPMENT, MATERIALS, AND INCIDENTALS FOR HEAT STRAIGHTENING SHALL BE PAID FOR UNDER ITEM NO. 602-10.81, HEAT STRAIGHTENING, L.S.

NOTE: FOLLOWING THE COMPLETION OF ALL STRUCTURAL STEEL REPAIRS AND PRIOR TO PAINTING, AN INSPECTION FOR CRACKS SHALL BE MADE IN ALL REPAIR AREAS. CRACKS DISCOVERED AS A RESULT OF THIS INSPECTION SHALL BE REPAIRED BY THE CONTRACTOR AT THE CONTRACTOR'S EXPENSE.

NOTE: LOCATIONS AND DIMENSIONS ARE APPROXIMATE. CONTRACTOR SHALL FIELD VERIFY PRIOR TO BEGINNING CONSTRUCTION. ALL WORK SHALL MEET WITH THE FULL APPROVAL OF THE ENGINEER.

SPECIAL NOTE: THE CONTRACTOR SHALL BE RESPONSIBLE FOR SUPPORTING THE SUPERSTRUCTURE DURING THE REPAIR OF THE GIRDER SECTIONS. DETAILS OF THE SUPPORT SYSTEM SHALL BE SUBMITTED TO THE ENGINEER FOR REVIEW BEFORE ANY GIRDER REPAIR IS BEGUN. COST OF THE SUPPORT SYSTEM SHALL BE INCLUDED IN ITEM NO. 602-10.81, HEAT STRAIGHTENING, L.S.

GRINDING OF NICKS AND GOUGES

1. NO GROUND PORTION IS TO HAVE A RADIUS LESS THAN 100 MM IN THE LONGITUDINAL DIRECTION (I.E. ALONG THE EDGE OF THE SURFACE).
2. THE GROUND SLOPE IS NOT TO EXCEED AN ANGLE OF 1 IN 5 TO THE NEAREST FACE OR EDGE.
3. ANY PLASTIC FLOW IS TO BE REMOVED FLUSH WITH THE FACE OR EDGE.
4. FLANGE EDGES ARE TO HAVE A MINIMUM RADIUS OF 3 MM.
5. FINAL GRINDING IS TO BE DONE IN THE LONGITUDINAL DIRECTION AND IN A MANNER SO AS NOT TO CAUSE HEAT DISCOLORATION.
6. ALL DISTORTED METAL IS TO BE REMOVED.
7. GRINDING IS TO EXTEND AT LEAST 1 MM BEYOND THE DAMAGED SURFACE OR END OF CRACKS.
8. USE DYE PENETRANT TO CHECK FOR CRACKS ON COMPLETION OF GRINDING.
9. COST OF GOUGE REPAIR TO BE INCLUDED IN COST OF ITEM NO. 602-10.81, HEAT STRAIGHTENING, L.S.

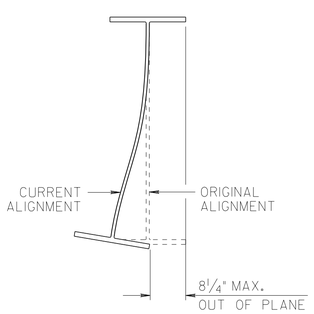

SECTION "A"-"A"

(AT POINT OF IMPACT)

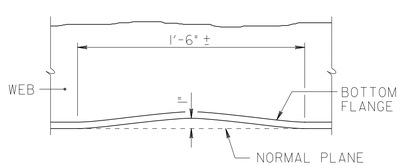

DETAIL "A"

ELEVATION - BEAM D, SPAN 2

STATE OF TENNESSEE
DEPARTMENT OF TRANSPORTATION

STRUCTURAL STEEL REPAIR DETAILS
ROUTE 1280 OVER
INTERSTATE 75
BRIDGE NO. 07-01280-16.36
CAMPBELL COUNTY
2014

DESIGNED BY	M. JONES	DATE	10/13
DRAWN BY	M. JONES	DATE	10/13
SUPERVISED BY	L. BILBREY	DATE	10/13
CHECKED BY	J. ECKEL	DATE	10/13

2/5/2014
F:\35\35034\35034I3\Bridge\350343_SSD001.dgn

BR-116-17