PROJECT NO.	YEAR	SHEET NO.
47005-4158-04	2014	

REVISIONS

NO.	DATE	BY	BRIEF DESCRIPTION

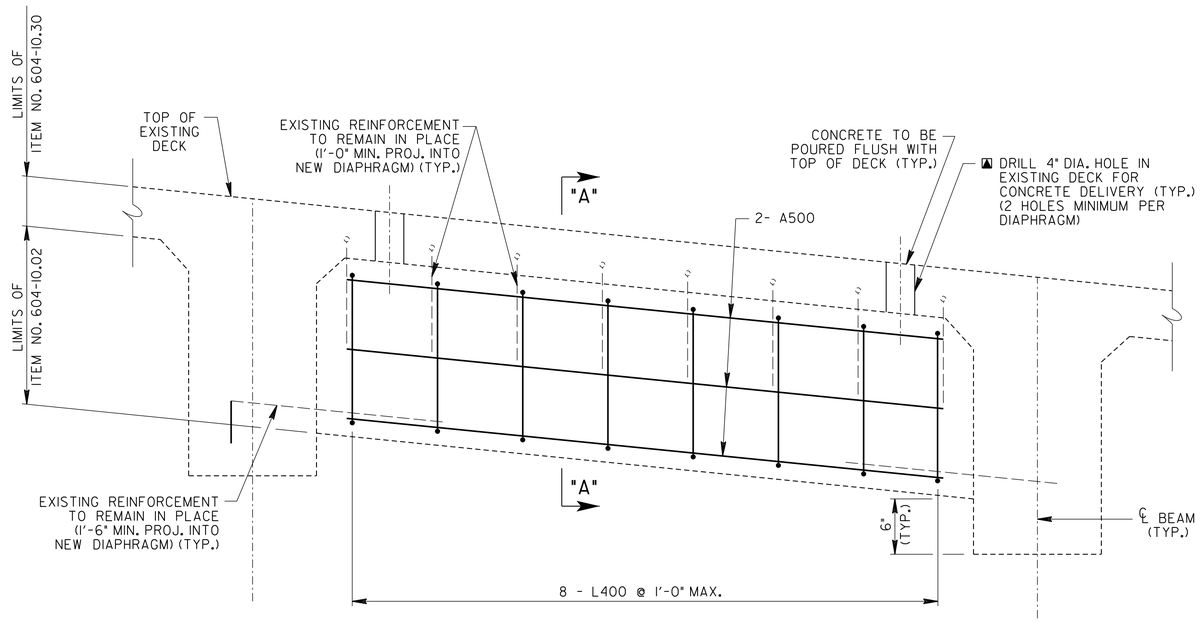

DIAPHRAGM REPLACEMENT DETAIL

(TYP. @ BENT NOS. 1 AND 4)
(16 LOCATIONS)

A DENOTES: OMIT HOLE IF FULL DEPTH DECK REPAIRS ARE REQUIRED AT THE DIAPHRAGM LOCATION.

NOTE: EXISTING REINFORCEMENT PROJECTING INTO NEW DIAPHRAGM TO BE CLEANED PRIOR TO PLACING NEW REINFORCING STEEL.

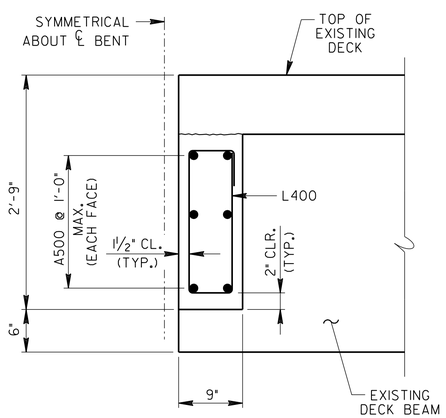

SECTION "A"-"A"

(EXISTING REINFORCEMENT NOT SHOWN FOR CLARITY)

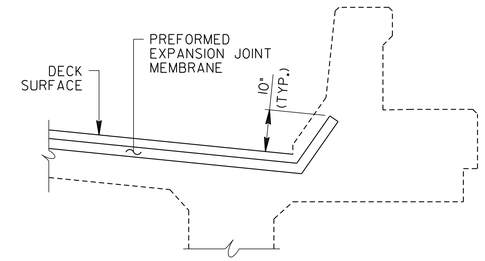

LIMITS OF EXPANSION JOINT MATERIAL

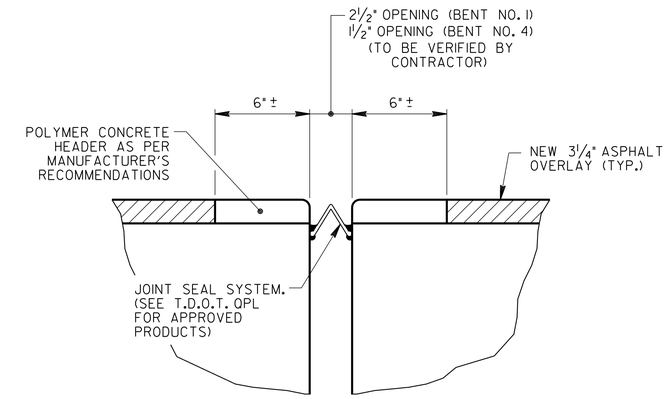

PREFORMED JOINT SEAL REPAIR

(AT BENT NO. 1)

NOTE: EXPANSION GAP WILL CHANGE WITH THE TEMPERATURE AND THE CONTRACTOR SHALL COMPENSATE IN ACCORDANCE WITH THE MANUFACTURER'S RECOMMENDATIONS.

NOTE: TOP 6" OF JOINT SHALL BE BLAST CLEANED TO REMOVE LATTANCE AND OTHER DELETERIOUS MATERIAL BEFORE INSTALLATION OF EXPANSION JOINT. ALL DEBRIS AND EXISTING JOINT MATERIAL SHALL BE REMOVED FOR THE FULL DEPTH OF THE EXISTING JOINT OPENING.

RESETTING EXISTING EXPANSION JOINT:

NOTE: INCLUDES FURNISHING ALL MATERIALS AND EQUIPMENT, REMOVAL OF EXISTING JOINT MATERIAL (AS DIRECTED BY THE ENGINEER), AND COMPLETE INSTALLATION IN ACCORDANCE WITH THE MANUFACTURER'S RECOMMENDATIONS. DETAILED SPECIFICATIONS AND INSTALLATION PROCEDURES SHALL BE SUBMITTED TO THE PROJECT ENGINEER PRIOR TO CONSTRUCTION. THE MANUFACTURER AND THE CONTRACTOR SHALL BE RESPONSIBLE FOR THE WORKMANSHIP AND PERFORMANCE OF THE INSTALLED JOINT.

NOTE: COST OF EXPANSION JOINT REPAIRS TO BE INCLUDED IN ITEM NO. 604-10.44, EXPANSION JOINT REPAIRS, L.F.

BILL OF STEEL (PER DIAPHRAGM)

BAR	LOCATION	SIZE	NO. REQ'D	BENDING DIMENSIONS A	B	C	D	LENGTH
		REGULAR						
A500	DIAPHRAGM	5	6					7'-0"
L400	DIAPHRAGM	4	8	6"	4½"	1'-10"		5'-1"

NOTE: DIMENSIONS SHOWN ON THIS SHEET ARE OUTSIDE TO OUTSIDE OF BARS. STANDARD C.R.S.I. HOOK DETAILS SHALL APPLY EXCEPT AS NOTED.

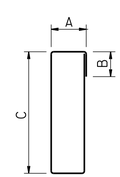

BARS L

ESTIMATED DIAPHRAGM REPAIRS

ITEM NO. 604-10.02 CONCRETE REPAIRS (C.Y.)	ITEM NO. 604-10.18 REINFORCING STEEL (REPAIRS) (LBS.)
8	1136

STATE OF TENNESSEE
DEPARTMENT OF TRANSPORTATION

SUPERSTRUCTURE REPAIR DETAILS
STATE ROUTE 9 OVER
INTERSTATE 275
BRIDGE NO. 47-SR009-07.18
KNOX COUNTY
2014

DESIGNED BY M. JONES DATE 07/13
DRAWN BY M. JONES DATE 07/13
SUPERVISED BY L. BILBREY DATE 07/13
CHECKED BY J. ECKEL DATE 07/13

4/30/2014
F:\35\35034\350341\2\Bridge\350341\2_SD001.dgn

BR-116-88