TENNESSEE D.O.T.
DESIGN DIVISION
FILE NO.

TYPE	YEAR	PROJECT NO.	SHEET NO.
CONST.	2014	47005-4158-04	2B

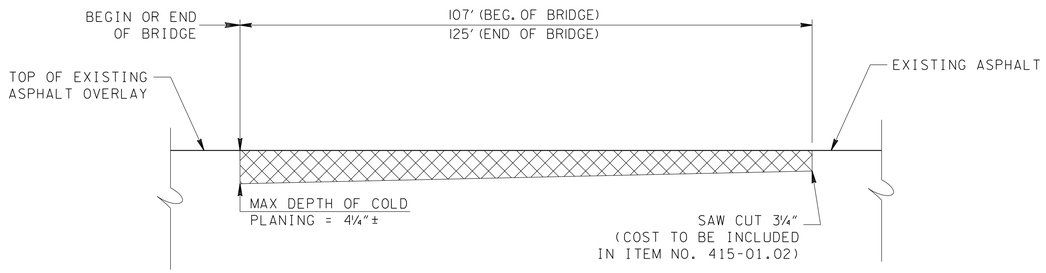

COLD PLANING DETAIL

(TYP.)

DENOTES: COLD PLANING

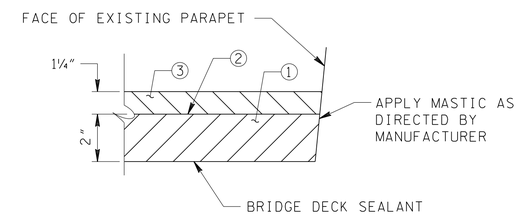

BRIDGE DECK SEALANT DETAIL

(TYP.)

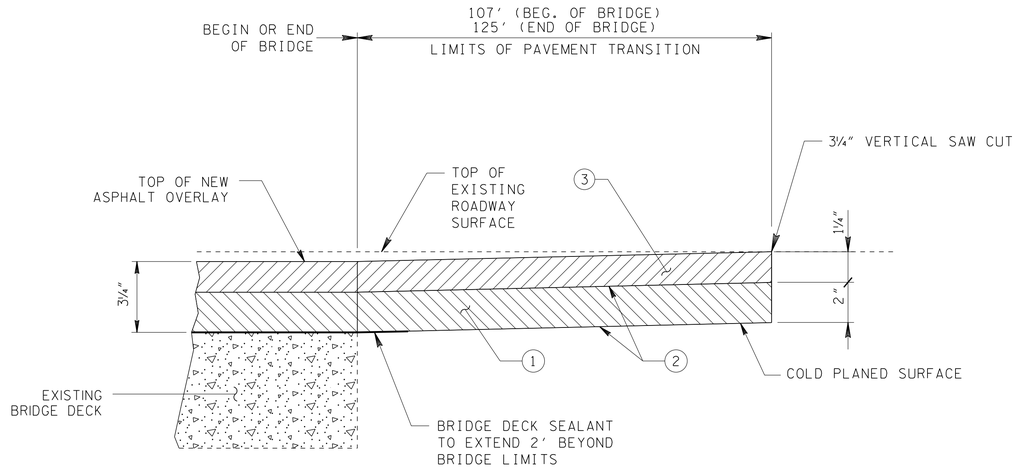

PAVEMENT TRANSITION DETAIL

(TYP.)

NOTES

1. COLD PLANING MAY BE MORE OR LESS DEPENDING UPON ACTUAL ASPHALT DEPTH ON DECK AND CROSS SLOPES OF THE ROADWAYS. HOWEVER, 3" SAW CUT AT BEGINNING OF TRANSITION SHALL BE MAINTAINED.

2. IF COLD PLANING UNCOVERS BASE STONE, MINERAL AGGREGATE, TYPE A BASE, GRADING D MATERIAL SHALL BE ADDED IN A MINIMUM OF ONE 6" COMPACTED LIFT. AN APPLICATION OF PRIME COAT SHALL BE PLACED BETWEEN THE BASE STONE AND ANY ASPHALT AT A RATE OF 0.35 GAL/SY. ALL COST TO EXCAVATE BASE STONE AND APPLY PRIME COAT SHALL BE INCLUDED IN THE COST OF OTHER ITEMS.

3. SEE SECTION 906.04 FOR DETAILS OF BRIDGE DECK SEALANT AND MASTIC.

4. FOR DETAILS OF EXPANSION JOINTS ON BRIDGE DECK, SEE DRAWING BR-116-88.

PAVEMENT SCHEDULE

1	BITUMINOUS PLANT MIX (BINDER) (2" THICK) 307-03.08, ASPHALT CONCRETE MIX (PG76-22) (BPMB-HM) GRADING B-M2
2	BITUMINOUS TACK COAT TO BE INCLUDED IN OTHER ITEMS
3	BITUMINOUS SURFACE MIX (1¼" THICK) 411-03.10, ACS MIX (PG76-22) GRADING D

SEALED BY

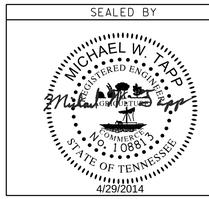

STATE OF TENNESSEE
DEPARTMENT OF TRANSPORTATION

PAVEMENT
TRANSITION
DETAILS

4/28/2014
F:\35\35034\3503412\Bridge\3503412_R0002.dgn