U.S.A. No: TN10561E

e:\tn105\tn10561.dgn 08-DEC-1997 10:07
STR

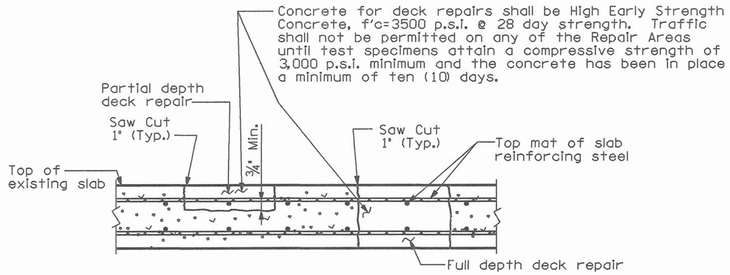

DETAIL SHOWING FULL AND PARTIAL DEPTH DECK REPAIR

Remove concrete in all delaminated areas to a depth of ¾" below the top bar of the top mat of reinforcing steel. All reinforcing steel in areas of deck repair shall be completely cleaned. Areas of concrete removal shall be designated by personnel from the Bridge Repair Office. Inspections to determine areas of deck repair shall be scheduled with the Bridge Repair Office at least three (3) days in advance. Deck repair will be paid for under Item No. 604-10.50, Bridge Deck Repair (Partial Depth of Slab), and Item No. 604-10.30, Bridge Deck Repair (Full Depth of Slab). During partial depth repairs, should deteriorated concrete be encountered which appears to run full depth in the slab, the Engineer may designate these areas to be repaired under Item No. 604-10.30. Power driven hand tools used for the removal of unsound concrete in making partial and full depth repairs are subject to the following restrictions: 1) (Partial depth repairs) pneumatic hammers heavier than nominal 60 pound class shall not be used. 2) (Full depth repairs) pneumatic hammers heavier than nominal 90 pound class shall not be used. Also all deck repair over beams will be restricted to 60 pound pneumatic hammers. 3) Chipping hammers of the 15 pound class shall be used to remove concrete from beneath any reinforcing steel. 4) Traffic control shall be provided for traffic below bridge during partial and full depth deck repair.

NOTE: Item No. 604-10.30 and 604-10.50 shall be bid with the contingency that these items may be increased, decreased, or eliminated as directed by the Engineer.

SPECIAL NOTE: Deck repairs can only be made between 9:00 p.m. Friday night and 6:00 a.m. Monday morning.

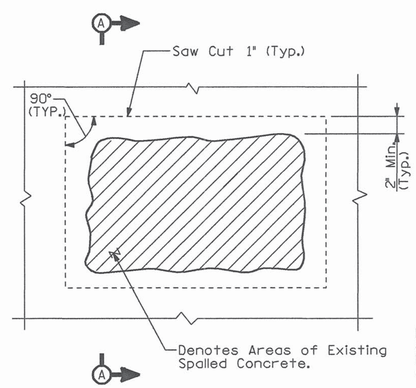

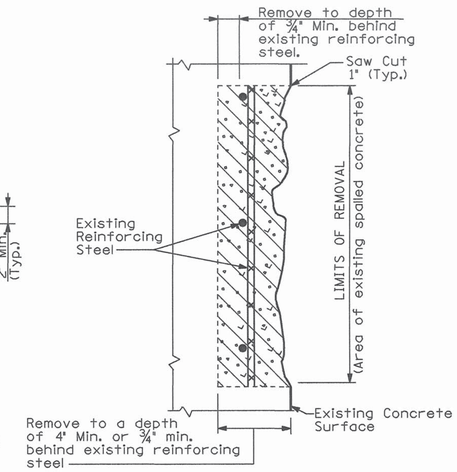

SECTION A-A

DETAILS OF SPALLED CONCRETE SURFACE REMOVAL AND REPAIR

NOTE: Saw cut existing concrete surfaces so as to obtain a square area.

NOTE: The patching material shall be high early strength concrete.

NOTE: Cost of saw cutting, removing spalled concrete, cleaning, patching material, labor and any miscellaneous materials necessary to complete the repairs as shown to be included in Item No. 604-10.42, Concrete, C.F.

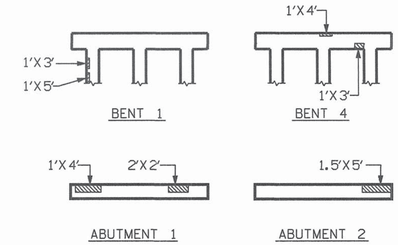

PROJECT NO.	YEAR	SHEET NO.
98012-4109-04	1998	

REVISIONS

NO.	DATE	BY	BRIEF DESCRIPTION

APPROX. SPALLED CONCRETE REPAIR AREAS	
Abutment 1	5 C.F.
Bent 1	5 C.F.
Bent 4	5 C.F.
Abutment 2	5 C.F.

NOTE: The Engineer from Headquarters, Bridge Inspection and Repair Office shall designate all spalled concrete repair areas in the field. Quantities given are approximate. Item No. 604-10.42 shall be bid with the contingency that it may be increased, decreased or eliminated as directed by the Engineer.

▨ - Denotes area of spalled concrete to be removed and repaired.

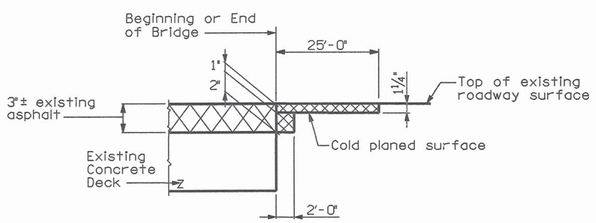

ASPHALT REMOVAL

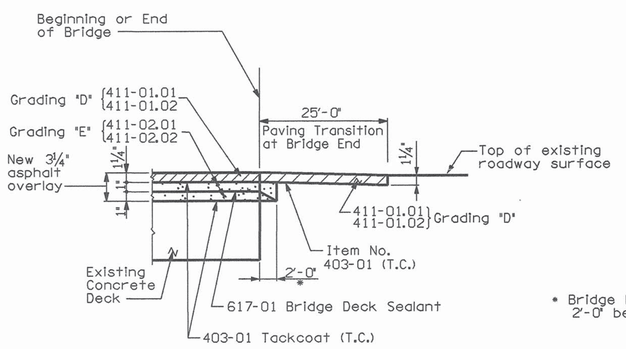

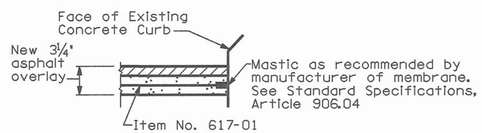

▩ - Denotes asphalt to be removed.

Removal of existing asphalt from bridge deck for full width and length of bridge to be paid for under Item No. 604-10.14.

Removal of existing asphalt from transitions for for full width of approaches to be paid for under Item No. 415-01.02.

NOTE: When placing new 3¼" asphalt overlay with seal Contractors shall make provisions to maintain the existing bridge deck drain openings. These drains are to be cleaned and remain open. Cost to be included in items bid on.

See Sections 617 and 906.04 of the Tennessee Standard Specifications for Road and Bridge Construction.

* Bridge Deck Sealant to extend 2'-0" beyond end of bridge

BRIDGE DECK SEALANT AND PAVEMENT TRANSITION DETAIL

No Scale

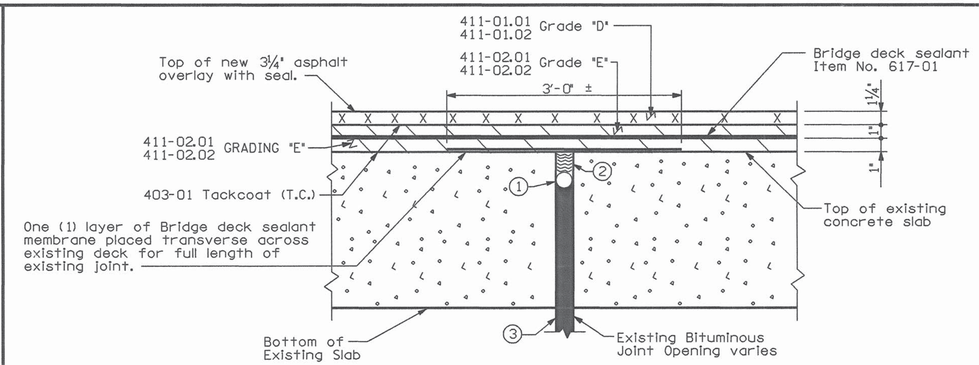

EXISTING BITUMINOUS JOINT REPAIR DETAIL

(Total of one (1) location)

(1) NOTE: The movement gap shall be caulked with a backer rod of suitable diameter. The rod shall be placed at a depth to ensure the correct width/depth ratio of the new bridge joint sealer. Backer rod and caulk shall be as per the sealer manufacturer.

(2) NOTE: Top 2" of all existing bituminous joints in the bridge slab to be cleaned and resealed with new joint sealer. Contractor has the option of using either:
1) A Type II hot-poured elastic type concrete joint sealer. See Standard Specifications Section 905.05, Joint Sealers.
2) A cold pour single component joint sealer as approved by the Division of Materials and Test.

NOTE: Cost of joint cleaning and sealing to be included under Item No. 617-01 (Bridge Deck Sealant). The sealer shall extend up and across the curb or sidewalk area to the outer edge of the bridge slab.

(3) All existing bituminous joint material and debris shall be removed for full length and depth of joint.

Joints shall be cleaned to full satisfaction of the Engineer before it is sealed as shown in above detail.

All cost of removing joint material and debris and for cleaning joint surfaces shall be included in Item No. 617-01.

WILLIAM S. HUFFSTETLER REGISTERED ENGINEER NO. 13916 STATE OF TENNESSEE

12-01-97

STATE OF TENNESSEE
DEPARTMENT OF TRANSPORTATION
BUREAU OF HIGHWAYS

BRIDGE REPAIR DETAILS (1)
STATE ROUTE 9 OVER
INTERSTATE I-275
BRIDGE NO. 47-SR9-7.18
KNOX COUNTY
1998

DESIGNED BY	BLS	DATE	7-94
DRAWN BY	PGR	DATE	7-94
SUPERVISED BY	WSH	DATE	7-94
CHECKED BY	BLS	DATE	12-97

BR-27-76