W.S.A. No: TN10561A

e:\tn105\tn10561.dgn 08-DEC-1997 10:12 STR

ESTIMATED QUANTITIES

Note	ITEM NO.	DESCRIPTION	UNITS	QUANTITY (BRIDGE NO. 47-SR9-7.18)
(1)	209-08.01	TEMPORARY FILTER BARRIER	L.F.	260
(2)	403-01	BITUMINOUS MATERIAL FOR TACK COAT (T.C.)	TON	1
(2)	411-01.01	MIN. AGGR. FOR ASPH. CONC. SUR. <ACS> GRADE "D"	TON	74
(2)	411-01.02	ASPH. CEM. FOR ASPH. CONC. SUR. <ACS> GRADE "D"	TON	5
(2)	411-02.01	MIN. AGGR. FOR ASPH. CONC. SUR. <ACS> GRADE "E"	TON	103
(2)	411-02.02	ASPH. CEM. FOR ASPH. CONC. SUR. <ACS> GRADE "E"	TON	7
(3)	415-01.02	COLD PLANING OF BITUMINOUS PAVEMENT	S.Y.	175
	415-02.02	SALVAGE VALUE OF COLD PLANINGS	S.Y.	175
(14)	604-04.02	APPLIED TEXTURE FINISH (EXISTING STRUCTURES)	S.Y.	250
(4)	604-10.14	REMOVE EXISTING WEARING SURFACE	L.S.	1
(5)	604-10.30	BRIDGE DECK REPAIRS (FULL DEPTH OF SLAB)	S.Y.	80
(6)	604-10.42	CONCRETE REPAIRS	C.F.	48
(7)	604-10.44	EXPANSION JOINT REPAIRS	L.F.	40
(5)	604-10.50	BRIDGE DECK REPAIRS (PARTIAL DEPTH OF SLAB)	S.Y.	300
(8)	604-10.90	MISCELLANEOUS BRIDGE ITEMS	L.S.	1
(9)	617-01	BRIDGE DECK SEALANT	S.Y.	1025
△2 (15)	705-08.62	GUARDRAIL ENERGY ABSORBING TERMINAL (PORTABLE)	EA.	2
	712-01	TRAFFIC CONTROL	L.S.	1
	712-02.02	INTERCONNECTED PORTABLE BARRIER RAIL	L.F.	730
	712-04.01	FLEXIBLE DRUMS (CHANNELIZING)	EA.	57
	712-05.03	WARNING LIGHTS (TYPE C)	EA.	29
(10)	712-06.10	NEW SIGNS (CONSTRUCTION)	S.F.	744
(11)	712-06.15	NEW SIGNS (CONSTRUCTION) ("BEE" ALERT)	EA.	4
(12)	712-06.01	VERTICAL PANELS	S.F.	48
	712-08.03	ARROW BOARD (TYPE C)	EA.	4
	712-09.01	REMOVABLE PAVEMENT MARKING (LINE)	L.F.	8140
(13)	716-02.01	PLASTIC PAVEMENT MARKING (LINE)	L.M.	0.5
	717-01	MOBILIZATION	L.S.	1

ESTIMATED QUANTITY NOTES:

(1) Includes cost of all labor and materials for furnishing and installing the temporary filter barriers where located by the Engineer and removal upon project completion. See Std. Dwg. No. EC-STR-3. The Engineer may increase, decrease or eliminate the quantity for this Item. See Subsection 209.07 of the Standard Specifications for Maintenance Replacement.

(2) Includes all asphalt materials and tack coat as required to place new 3¼" asphalt overlay for the entire bridge width and length and the asphalt transitions off each end of bridge. See Dwg. No. BR-27-76 for notes and details.

(3) Includes all cost for removing existing asphalt overlay from transitions off each end of the bridge. See Dwg. No. BR-27-76 for notes and details.

(4) Includes all cost for removing approx. 3" of existing asphalt overlay for entire bridge width and length (Approx. 1000 S.Y.). See Dwg. No. BR-27-76 for notes and details.

(5) Includes all cost for performing full and partial depth deck repairs to existing concrete bridge deck as designated by the Engineer. See Dwg. No. BR-27-76 for notes and details.

(6) Includes all cost for removal of existing concrete and new patching material for spall and beam repairs. See Dwg. No's. BR-27-76 and 77 for notes and details.

Abutment 1 Spall Repair = 5 C.F.	Beam Repair A Span 2 = 25 C.F.
Bent 1 Spall Repair = 5 C.F.	Beam Repair B Span 2 = 2 C.F.
Bent 4 Spall Repair = 5 C.F.	Beam Repair C Span 2 = 1 C.F.
Abutment 2 Spall Repair = 5 C.F.	

(7) Includes all cost for removal of portions of existing joint and debris at Bent 1 and for new XJS Joint System. See Dwg. No. BR-27-77 for notes and details.

(8) Includes all cost for four (4) steel portable barrier connector plates. See this sheet for notes and details.

(9) Includes all cost of the bridge deck sealant membrane used in the new 3¼" asphalt overlay and for cleaning and sealing one (1) existing bituminous joint (approx. length = 45 ft.). See Dwg. No. BR-27-76 for notes and details.

(10) Includes the installation and maintenance of a new sign panel, sheeting and supports. See Special Provision No. 712F.

(11) See Special Provision No. 712G.

(12) Includes 24 S.F. of VP-1R and 24 S.F. of VP-1L.

(13) Plastic pavement markings shall be thermoplastic. See note this sheet.

△1 (14) INCLUDES ALL COST FOR APPLYING TEXTURE FINISH TO THE CONCRETE BRIDGE RAIL FOR THE LIMITS SHOWN (FULL LENGTH OF BRIDGE). ALSO, INCLUDES SURFACE PREPARATION USING A HIGH PRESSURE WATER WASH TO REMOVE ALL LOOSE COATINGS, DEBRIS, ETC. AS DIRECTED BY THE ENGINEER.

△2 (15) PORTABLE GUARDRAIL ENERGY ATTENUATOR TERMINAL MUST MEET NCHRP 350, LEVEL 3.

DESIGNED BY	BLS	DATE	5-94
DRAWN BY	PGR	DATE	5-94
SUPERVISED BY	WSH	DATE	5-94
CHECKED BY	BLS	DATE	12-97

GENERAL NOTES

SPECIFICATIONS: Standard Road and Bridge Specifications of the Tennessee Department of Transportation. (March 1, 1995 edition).

DESIGN SPECIFICATIONS: AASHTO 1996 Edition with addenda.

HIGH EARLY STRENGTH CONCRETE: The mix to meet the requirements of the Standard Specifications, Class "A", except the cement content shall be a minimum of 714 lbs., the water cement ratio shall be a maximum of 0.40, no fly ash replacement will be permitted and the minimum 28 day compressive strength shall be 3,500 p.s.i. Traffic shall not be permitted on any of the repair areas until test specimens attain a compressive strength of 3,000 p.s.i. minimum and the concrete has been in place a minimum of ten (10) days.

HIGH EARLY STRENGTH CONCRETE (BEAM REPAIR A): The mix to meet the requirements of the Standard Specifications, Class "A", except the cement content shall be a minimum of 714 lbs. A high range, water reducing admixture (superplasticizer) shall be used subject to the approval of the Engineer. The water cement ratio shall be a maximum of 0.40, no fly ash replacement will be permitted and the concrete shall attain a minimum compressive strength of f'c=3000 p.s.i. in 18 hours.

CONCRETE CURING: All concrete in repair areas shall be cured according to the Standard Specifications.

DEMOLITION: The Contractor shall take special care to protect any parts of the structure that are not to be removed specifically. The Contractor is not allowed to use a hydraulic ram mounted on a backhoe (commonly called a hoe ram) or other similarly heavy equipment for concrete removal. Pneumatic hammers may be used to remove unsound concrete. For full depth of concrete slab removal except over beams, the maximum hammer size is 90 pound class. For partial depth of concrete slab removal and any work over beams, the maximum hammer size is 60 pound class. Sawing or cutting of the concrete is acceptable so long as any specified projection of the existing reinforcing steel is maintained. All devices proposed for concrete demolition shall meet the approval of the Engineer.

FINISHING CONCRETE SURFACES: Concrete finishing shall be in accordance with Section 604.22 of the Tennessee Standard Specification. A Class I finish followed by an Applied Texture Finish shall be used in lieu of a Class II finish. No texture finish shall be applied prior to completion of paving and hauling operations at the bridge site. The Applied Texture Finish shall be measured and paid for under Item 604-04.02.

PLASTIC PAVEMENT MARKING: If thermoplastic is used on the final surface, the Contractor shall have the option of using reflectorized paint installed to permanent standards at the end of each day's work and then installing the permanent marking after the paving operation is completed. Short, unmarked sections shall not be allowed. The temporary markings for the final surface will not be measured and paid for directly, but the costs are to be included in the price bid for the permanent markings. These markings will be measured and paid for under Item. No. 716-02.01, Plastic Pavement Markings (Line) per Lin. Mile.

PATCHING MATERIAL: Patching Material shall be a polymer modified cementitious structural patching material on vertical and overhead surfaces of Beam Repairs B and C. See Qualified Products List 13 (F).

SPECIAL NOTE TO CONTRACTOR CONCERNING CONCRETE: Concrete for Beam Repair A shall be high early strength concrete with a compressive strength of f'c=3000 p.s.i. at 18 hours. The Contractor shall provide proof prior to beginning work that the proposed concrete mix will obtain required properties. Proof shall be provided by an independant testing company and submitted to the Materials and Test Division of the Tennessee Department of Transportation for approval.

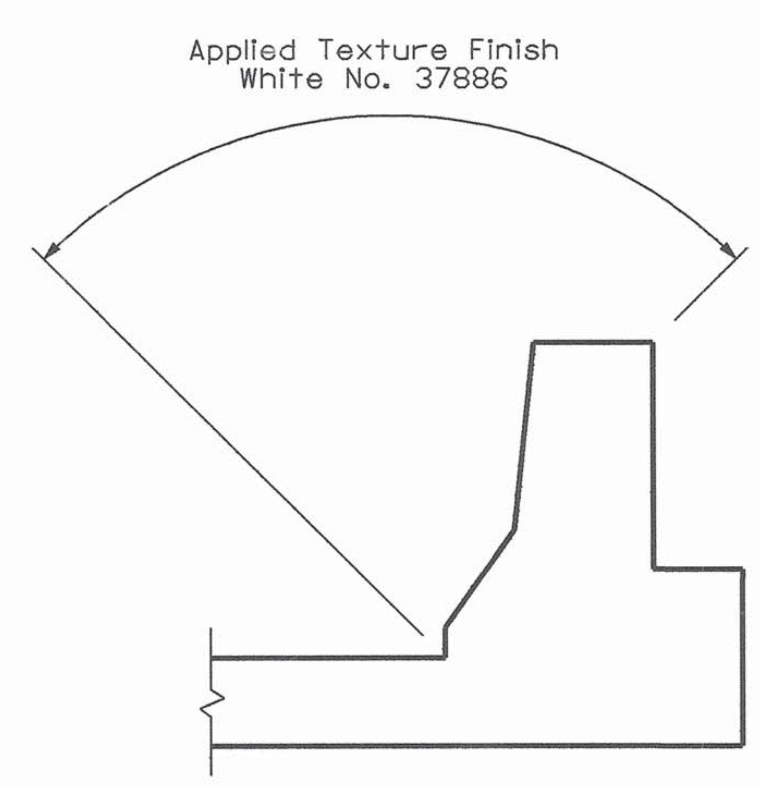

LIMITS OF APPLIED TEXTURE FINISH

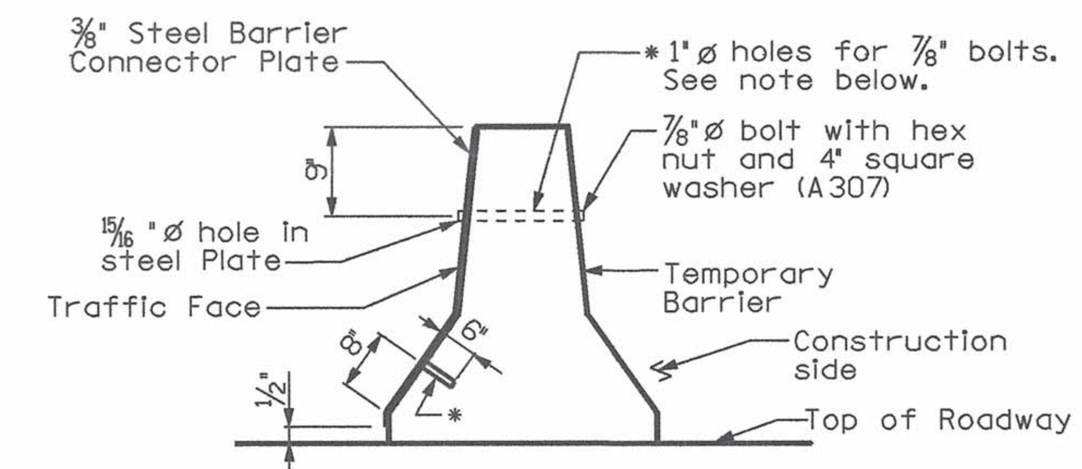

SECTION B-B

PROJECT NO.	YEAR	SHEET NO.
98012-4109-04	1998	2

REVISIONS

NO.	DATE	BY	BRIEF DESCRIPTION
1	1-6-98	RJC	Added Footnote 14
2	1-20-98	RJC	ADDED FOOTNOTE 15

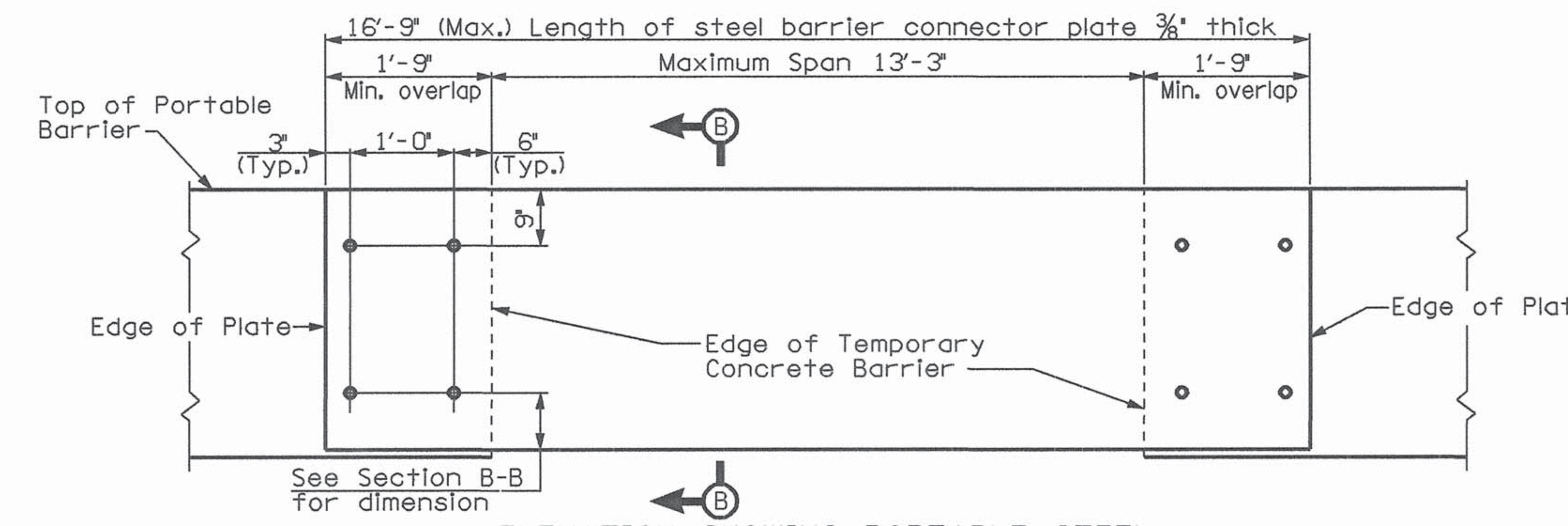

ELEVATION SHOWING PORTABLE STEEL BARRIER CONNECTOR PLATE

NOTE: Contractor shall install a ⅜" thick steel connector plate to the portable concrete barriers in areas where new expansion joints are to be installed and deck repairs are to be performed. The connector plates shall be used on the opposite side during Phase II construction. 1"ø holes may be reused for Phase II construction with new holes for bottom masonry anchors.

* NOTE: 1" ø holes for the masonry anchor and 1" ø holes for ⅞" ø bolts shall be drilled with a high speed drill. The drill bit shall be capable of drilling through existing reinforcing bars and concrete.

NOTE: Cost of the ⅜" thick steel connector plates, all bolts with hex nuts & washers, masonry anchors, drilling, labor, and all miscellaneous materials necessary for the installation of four (4) steel barrier connector plates to be included in Item No. 604-10.90, Miscellaneous Bridge Items, L.S. Contractors bid for this item shall be for four (4) plates with a total weight of 2880 lbs. If the Contractor elects to fabricate more than four (4) plates, it shall be at his own expense.

SPECIAL NOTE TO CONTRACTOR: In lieu of the 16'-9" steel barrier connector plate as shown in detail, the Contractor has the option of submitting to the Engineer an alternate method of placing the concrete portable barriers when working around the repair areas. If alternative is chosen it shall be the responsibility of the Contractor to protect the traffic from the repair areas. If alternative method is chosen there shall be no additional compensation.

DETAILS SHOWING STEEL PORTABLE BARRIER CONNECTOR PLATE

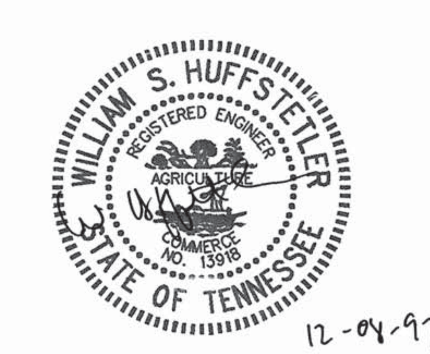

12-04-97

STATE OF TENNESSEE
DEPARTMENT OF TRANSPORTATION
BUREAU OF HIGHWAYS

ESTIMATED QUANTITIES AND GENERAL NOTES

STATE ROUTE 9 OVER
INTERSTATE I-275
BRIDGE NO. 47-SR9-7.18
KNOX COUNTY
1998

BR-27-75