TENNESSEE D.O.T.
DESIGN DIVISION
FILE NO.

Index Of Sheets
Construction

SEE SHEET NO. 1A

STATE OF TENNESSEE
DEPARTMENT OF TRANSPORTATION
BUREAU OF ENGINEERING

TENN.	YEAR	SHEET NO.
	2014	1
FED. AID PROJ. NO.	STP-49(26)	
STATE PROJ. NO.	11008-3223-14	

CHEATHAM COUNTY

STATE ROUTE 49
INTERSECTION IMPROVEMENT AT OLD CLARKSVILLE PIKE

GRADE, DRAIN, PAVE & SIGNALIZATION

STATE HIGHWAY NO. 49 F.A.H.S. NO. N/A

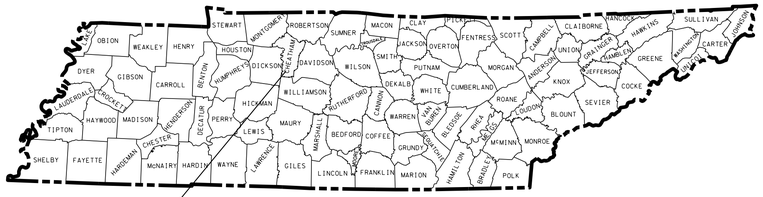

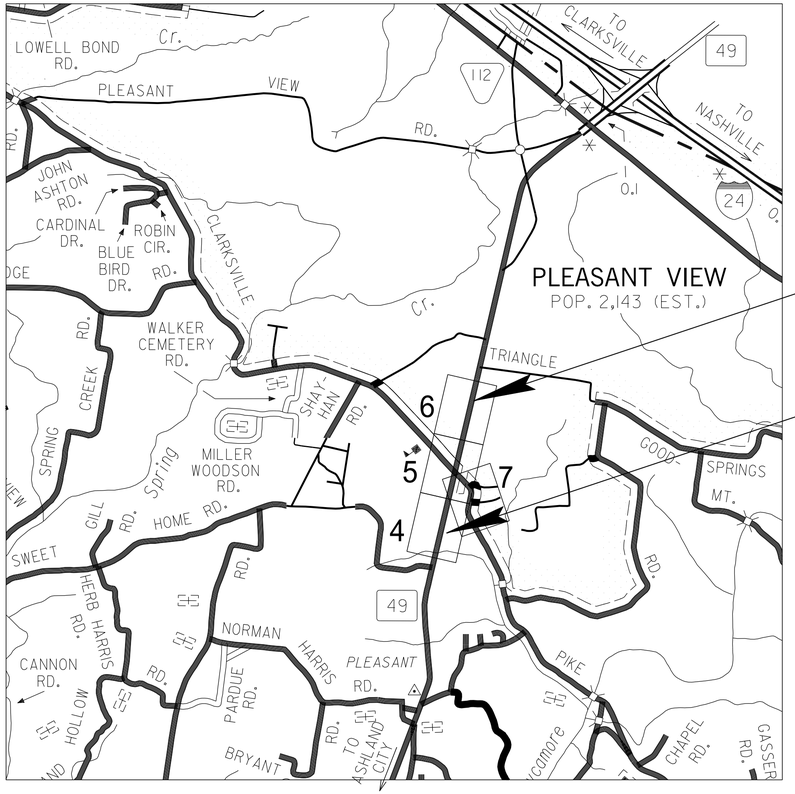

SCALE: 1"=½ MILE

N

NO EXCLUSIONS
NO EQUATIONS

11008-3223-14
END PROJ. STP-49(26) (CONST.)
STA. 32+11.10

11008-3223-14
BEGIN PROJ. STP-49(26) (CONST.)
STA. 9+50.00

UNOFFICIAL SET
NOT FOR BIDDING

SEALED BY

APPROVED: Paul D. Degges
PAUL D. DEGGES, CHIEF ENGINEER

DATE:

APPROVED:
JOHN SCHROER, COMMISSIONER

SPECIAL NOTES

PROPOSALS MAY BE REJECTED BY THE COMMISSIONER IF ANY OF THE UNIT PRICES CONTAINED THEREIN ARE OBVIOUSLY UNBALANCED, EITHER EXCESSIVE OR BELOW THE REASONABLE COST ANALYSIS VALUE.

THIS PROJECT TO BE CONSTRUCTED UNDER THE STANDARD SPECIFICATIONS OF THE TENNESSEE DEPARTMENT OF TRANSPORTATION DATED MARCH 1, 2006 AND ADDITIONAL SPECIFICATIONS AND SPECIAL PROVISIONS CONTAINED IN THE PLANS AND IN THE PROPOSAL CONTRACT.

TDOT ROAD SP. SV. 2 BILLY BINION

DESIGNER DARRELL GRAY CHECKED BY RUSTY BOGUSKIE

P.E. NO. 11008-1220-04

PIN NO. 107847.00

ROADWAY LENGTH	0.414 MILES
BRIDGE LENGTH	0.000 MILES
BOX BRIDGE LENGTH	0.000 MILES
PROJECT LENGTH	0.414 MILES

TRAFFIC DATA	
AADT (2014)	7,780
AADT (2034)	9,340
DHV (2034)	1,097
D	55 - 45
T (AADT)	5 %
T (DHV)	3 %
V	45 MPH

U.S. DEPARTMENT OF TRANSPORTATION
FEDERAL HIGHWAY ADMINISTRATION

APPROVED:

DIVISION ADMINISTRATOR DATE

27-JAN-2014 10:01
\\JJ03WF01.tdot.state.tn.us\03Shared\SURVEY\DESIGN\PIN 107847.00 Cheatham Co SR 49\001.SHT

TYPE	YEAR	PROJECT NO.	SHEET NO.
CONST.	2014	STP-49(26)	1A

TENNESSEE D.O.T.
DESIGN DIVISION
FILE NO.

INDEX

SHEET NAME	SHEET NO.
TITLE SHEET	1
ROADWAY INDEX AND STANDARD DRAWINGS INDEX	1A - 1B
ESTIMATED ROADWAY QUANTITIES	2
ESTIMATED SIGNAL QUANTITIES AND SPECIAL NOTES	2A
TYPICAL SECTIONS AND PAVING SCHEDULE	2B - 2C
GENERAL NOTES AND SPECIAL NOTES	2D - 2F
TABULATED QUANTITIES	2G - 2H
PROPERTY MAP & R.O.W. ACQUISITION TABLE	3
RIGHT-OF-WAY NOTES UTILITY NOTES AND OWNERS	3A
PRESENT LAYOUTS	4 - 7
PROPOSED LAYOUTS	4A - 7A
PROPOSED PROFILES	4B - 7B
R.O.W. DETAILS	4C - 7C
PROFILE OF PRIVATE DRIVES	8 - 8A
DRAINAGE MAP	9
CULVERT SECTIONS	10
EROSION PREVENTION AND SEDIMENT CONTROL PLANS	11 - 11L
EXISTING CONTOURS	12 - 12C
PROPOSED CONTOURS	13 - 13C
TRAFFIC CONTROL PLANS	14 - 14C
SIGNAL LAYOUTS	15, 15A
SOILS SHEETS	16, 16A - 16F
ROADWAY CROSS SECTIONS	17 - 40
SIDE ROAD CROSS SECTIONS	41 - 51
SWPPP	S1 - S5
UTILITIES INDEX, UTILITY OWNERS, AND UTILITY SHEETS	U1-1 - U1-5

"NO PROJECT COMMITMENTS SHEET INCLUDED IN THIS SET OF PLANS."

STANDARD ROADWAY DRAWINGS

ROADWAY DESIGN STANDARDS

DWG. NO	REV.	DESCRIPTION
RD-A-1	12-18-99	STANDARD ABBREVIATIONS
RD-L-1	10-26-94	STANDARD LEGEND
RD-L-2	09-05-01	STANDARD LEGEND FOR UTILITY INSTALLATIONS
RD-L-3	04-15-04	STANDARD LEGEND FOR SIGNALIZATION AND LIGHTING
RD-L-4	04-15-04	STANDARD LEGEND FOR SIGNALIZATION AND LIGHTING
RD-L-5	05-01-08	STANDARD LEGEND FOR EROSION PREVENTION AND SEDIMENT CONTROL
RD-L-6	03-30-10	STANDARD LEGEND FOR EROSION PREVENTION AND SEDIMENT CONTROL
RD-L-7	05-24-12	STANDARD LEGEND FOR EROSION PREVENTION AND SEDIMENT CONTROL
RD01-S-11	04-04-03	DESIGN AND CONSTRUCTION DETAILS FOR ROADSIDE SLOPE DEVELOPMENT
RD01-S-11A	10-15-02	ROADSIDE DITCH DETAILS FOR DESIGN AND CONSTRUCTION
RD01-S-12	08-01-09	CLEAR ZONE CRITERIA
RD01-SD-1		INTERSECTION SIGHT DISTANCE DESIGN AND GENERAL NOTES
RD01-SD-2		INTERSECTION SIGHT DISTANCE LANDSCAPE AND OBSTRUCTION
RD01-SD-3		INTERSECTION SIGHT DISTANCE 2-LANE ROADWAYS
RD01-SE-2	10-15-02	URBAN SUPERELEVATION DETAILS
RD01-TS-6A	07-31-13	TYPICAL CURB AND GUTTER SECTIONS WITHOUT SHOULDER

DRAINAGE - CULVERTS AND ENDWALL

DWG. NO	REV.	DESCRIPTION
D-PB-1	01-02-13	STANDARD DETAILS FOR CONCRETE PIPE INSTALLATION
D-PE-18A	06-14-13	18" CONCRETE ENDWALL CROSS DRAIN
D-PE-18B		18" CONCRETE ENDWALL CROSS DRAIN
D-PE-36A	06-14-13	36" CONCRETE ENDWALL CROSS DRAIN WITH STEEL PIPE GRATE
P-PE-36B		36" CONCRETE ENDWALL CROSS DRAIN WITH STEEL PIPE GRATE
D-PE-48A	06-14-13	48" CONCRETE ENDWALL CROSS DRAIN WITH STEEL PIPE GRATE
D-PE-48B		48" CONCRETE ENDWALL CROSS DRAIN WITH STEEL PIPE GRATE

DRAINAGE-CATCH BASINS AND MANHOLES

DWG. NO	REV.	DESCRIPTION
D-CB-12B	09-24-12	STANDARD RECTANGULAR BRICK NO. 12 CATCH BASIN
D-CB-12LP	08-01-12	LOW PROFILE 32" X 32" SQUARE CONCRETE NO. 12LP CATCH BASIN
D-CB-12P	09-24-12	STANDARD PRECAST RECTANGULAR CONCRETE NO. 12 CATCH BASIN
D-CB-12RA	09-24-12	STANDARD PRECAST 48" CIRCULAR NO. 12 CATCH BASIN (FOR USE WITH 6" NONMOUNTABLE CURB)
D-CB-12RB	09-24-12	STANDARD PRECAST 60" AND 72" CIRCULAR NO. 12 CATCH BASIN (FOR USE WITH 6" NONMOUNTABLE CURB)
D-CB-12RC	09-24-12	STANDARD PRECAST 84" THRU 120" CIRCULAR NO. 12 CATCH BASIN (FOR USE WITH 6" NONMOUNTABLE CURB)
D-CB-12S	09-24-12	STANDARD RECTANGULAR CONCRETE NO. 12 CATCH BASIN
D-CB-14B	09-24-12	STANDARD RECTANGULAR BRICK NO. 14 CATCH BASIN
D-CB-14P	09-24-12	STANDARD PRECAST RECTANGULAR CONCRETE NO. 14 CATCH BASIN
D-CB-14RB	08-15-12	STANDARD PRECAST CIRCULAR NO. 14RB CATCH BASIN
D-CB-14S	09-24-12	STANDARD RECTANGULAR CONCRETE NO. 14 CATCH BASIN
D-CB-14SE	08-01-12	STANDARD 9' X 9' SQUARE CONCRETE NO. 14 CATCH BASIN
D-CB-42S	08-01-12	STANDARD 32" X 32" SQUARE CONCRETE NO. 42 CATCH BASIN
D-CB-42SB	09-24-12	STANDARD 4' X 4' SQUARE CONCRETE NO. 42 CATCH BASIN
D-CB-42SC	09-24-12	STANDARD 5'2" X 5'2" SQUARE CONCRETE NO. 42 CATCH BASIN
D-CB-42SD	09-24-12	STANDARD 7' X 7' SQUARE CONCRETE NO. 42 CATCH BASIN
D-CBB-12A	05-27-01	TYPE "B" CAST IRON FRAME, GRATE & NONMOUNTABLE INLET DETAILS FOR NOS. 10, 12, 14, 16, & 17 TYPE CATCH BASINS
D-CBB-12B	05-27-01	TYPE "B" CAST IRON FRAME, GRATE & 6" MOUNTABLE INLET DETAILS FOR NOS. 25, 26 & 27 TYPE CATCH BASINS
D-CBB-12C	05-27-01	TYPE "B" CAST IRON FRAME, GRATE & 4" MOUNTABLE INLET DETAILS FOR NOS. 28 & 29 TYPE CATCH BASINS
D-CBB-42	05-27-01	CAST IRON GRATE DETAILS FOR NOS. 42, 43 & 44 TYPE CATCH BASINS
D-JBS-1	08-01-12	STANDARD 32" X 32" SQUARE CONCRETE NO. 1 JUNCTION BOX
D-MH-2	08-01-12	STANDARD MASONRY & PRECAST NO. 3 MANHOLE
D-MH-3	08-01-12	STANDARD PRECAST CIRCULAR LID DETAILS FOR NO. 3 MANHOLE
D-MH-3A	08-01-12	STANDARD PRECAST CIRCULAR LID DETAILS FOR NO. 3 MANHOLE (96" AND 108" DIA.)
D-MH-3B		STANDARD PRECAST CIRCULAR LID DETAILS FOR NO. 3 MANHOLE (120" DIA.)
D-MH-4	08-01-12	STANDARD NO. 3 MANHOLE CASTINGS AND STEPS

UNOFFICIAL SET

NOT FOR BIDDING

SEALED BY

STATE OF TENNESSEE
DEPARTMENT OF TRANSPORTATION

INDEX AND STANDARD DRAWINGS

27-JAN-2014 10:01
\\JJ03WF01.tdot.state.tn.us\03Shared\SURVEY\DESIGN\PIN 107847.00 Cheatham Co SR 49\001A.SHT

TYPE	YEAR	PROJECT NO.	SHEET NO.
CONST.	2014	STP-49(26)	1B

TENNESSEE D.O.T.
DESIGN DIVISION
FILE NO.

ROADWAY AND PAVEMENT APPURTENANCES

RP-D-15	07-15-08	DETAILS OF STANDARD CONCRETE DRIVEWAYS
RP-D-16	07-15-08	DETAILS OF LOWERED STANDARD CONCRETE DRIVEWAYS
RP-H-3	06-04-13	HANDICAP RAMP AND TRUNCATED DOME SURFACE DETAIL
RP-H-5	06-04-13	PARALLEL CURB RAMP
RP-H-9	06-04-13	PARALLEL HANDICAP RAMP FOR 20' THRU 60' RADIUS
RP-I-5	12-18-96	EXAMPLES OF STREET AND ALLEY INTERSECTIONS
RP-NMC-10	07-29-03	STANDARD VERTICAL (NONMOUNTABLE) CONCRETE CURBS AND CONCRETE CURBS AND GUTTERS
RP-NMC-11	02-28-02	STANDARD VERTICAL (NONMOUNTABLE) CONCRETE CURBS AND CONCRETE CURBS AND GUTTERS
RP-R-1	05-27-01	STANDARD RAMPS TO SIDE ROADS
RP-S-7	06-04-13	DETAILS FOR STANDARD CONCRETE SIDEWALKS

TRAFFIC CONTROL APPURTENANCES

T-FAB-1	05-27-97	FLASHING YELLOW ARROW BOARD
T-M-1	11-01-11	DETAILS OF PAVEMENT MARKINGS FOR CONVENTIONAL ROADS AND MARKING ABBREVIATIONS
T-M-2	01-15-13	DETAILS OF PAVEMENT MARKINGS FOR CONVENTIONAL ROADS
T-M-3	09-19-91	MARKING STANDARDS FOR TRAFFIC ISLANDS, MEDIANS & PAVED SHOULDERS ON CONVENTIONAL ROADS
T-M-4	11-01-11	STANDARD INTERSECTION PAVEMENT MARKINGS
T-PBR-1	06-30-09	INTERCONNECTED PORTABLE BARRIER RAIL
T-PBR-2	11-01-11	DETAIL FOR VERTICAL PANELS AND FLEXIBLE DELINEATORS
T-S-10	04-04-12	STANDARD MOUNTING DETAILS FLAT SHEET SIGNS ALUMINUM-STEEL DESIGN
T-S-16	11-01-11	GROUND MOUNTED ROADSIDE SIGN AND DETAILS
T-S-17	07-19-13	STANDARD GROUND MOUNTED SIGN USING PERFORATED/KNOCKOUT SQUARE TUBE
T-S-19	07-19-13	STANDARD STEEL SIGN SUPPORTS
T-S-20	11-01-11	SIGN DETAILS
T-S-23A	07-19-13	MULTI-DIRECTIONAL SLIP BASE BREAKAWAY SQUARE TUBE SIGN SUPPORT
T-S-24	08-02-13	DETAILS OF SIGN WITH SOLAR FLASHING ASSEMBLY
T-SG-2	07-29-04	LOOP LEAD-INS, CONDUIT AND PULL BOXES
T-SG-3	11-11-04	STANDARD NOTES AND DETAILS OF INDUCTIVE LOOPS
T-SG-4		SPAN WIRE AND MESSENGER CABLE DETAILS
T-SG-5	07-29-04	CONTROLLER CABINET DETAILS
T-SG-7	11-01-11	SIGNAL HEAD ASSEMBLIES AND PEDESTRIAN PUSH BUTTON SIGNS
T-SG-7A	11-01-11	TYPICAL SIGNAL HEAD PLACEMENT
T-SG-8	11-01-11	STRAIN POLE DETAILS FOR SPAN MOUNTED SIGNALS
T-SG-9A		MISCELLANEOUS SIGNAL DETAILS
T-SG-10	05-06-13	MAST ARM POLE AND STRAIN POLES FOUNDATION DETAILS
T-SG-11	07-29-04	MAINTENANCE OF EXISTING SIGNALS DURING HIGHWAY CONSTRUCTION

TRAFFIC CONTROL APPURTENANCES (CONTD)

T-SG-12	11-01-11	TYPICAL WIRING FOR SIGNAL HEADS AND DETECTION LOOPS
T-WZ-10	04-02-12	ADVANCE ROAD WORK SIGNING ON HIGHWAYS AND FREEWAYS
T-WZ-36	04-02-12	LANE CLOSURE ON LOW-VOLUME 2-LANE HIGHWAY
T-WZ-40	04-02-12	RIGHT LANE CLOSURES AT NEAR SIDE OF INTERSECTIONS
T-WZ-41	04-02-12	LEFT LANE CLOSURES AT NEAR SIDE OF INTERSECTIONS
T-WZ-42	04-02-12	CENTER LANE CLOSURES AT NEAR SIDE OF INTERSECTIONS

EROSION PREVENTION AND SEDIMENT CONTROL

EC-STR-2	08-01-12	SEDIMENT FILTER BAG
EC-STR-3B	08-01-12	SILT FENCE
EC-STR-3C	08-01-12	SILT FENCE WITH WIRE BACKING
EC-STR-3D	04-01-08	ENHANCED SILT FENCE
EC-STR-3E	04-01-08	SILT FENCE FABRIC JOINING DETAILS
EC-STR-4A	08-01-12	ENCHANCED SILT FENCE CHECK (V-DITCH)
EC-STR-6	08-01-12	ROCK CHECK DAM
EC-STR-6A	08-01-12	ENHANCED ROCK CHECK DAM
EC-STR-8	08-01-12	FILTER SOCK
EC-STR-11	08-01-12	CULVERT PROCTECTION TYPE 1
EC-STR-25	08-01-12	TEMPORARY CULVERT CROSSING, CONSTRUCTION EXIT, CONSTRUCTION FORD
EC-STR-27	08-01-12	TEMPORARY SLOPE DRAIN AND BERM
EC-STR-34	08-01-12	EROSION CONTROL BLANKET FOR SLOPE INSTALLATION
EC-STR-37	08-01-12	SEDIMENT TUBE
EC-STR-39A	08-01-12	CURB INLET PROTECTION TYPE 3 & 4
EC-STR-43		CATCH BASIN FILTER ASSEMBLY (TYPE 3)
EC-STR-43A		CATCH BASIN FILTER ASSEMBLY (TYPE 3) SLIPCOVER DETAILS
EC-STR-44		CATCH BASIN FILTER ASSEMBLY (TYPE 4)
EC-STR-44A		CATCH BASIN FILTER ASSEMBLY (TYPE 4) SLIPCOVER DETAILS
EL-W-2	05-27-01	STANDARD GRAVITY-TYPE RETAINING WALLS

UNOFFICIAL SET

NOT FOR BIDDING

SEALED BY

STATE OF TENNESSEE
DEPARTMENT OF TRANSPORTATION

INDEX AND STANDARD DRAWINGS

27-JAN-2014 10:02
\\JJ03WF01.tdot.state.tn.us\03Shared\SURVEY\DESIGN\PIN 107847.00 Cheatham Co SR 49\001B.SHT

TENNESSEE D.O.T.
DESIGN DIVISION
FILE NO.

TYPE	YEAR	PROJECT NO.	SHEET NO.
CONST.	2014	STP-49(26)	2

ESTIMATED ROADWAY QUANTITIES

	ITEM NO.	DESCRIPTION	UNIT	QUANTITY
	105-01	CONSTRUCTION STAKES, LINES AND GRADES	LS	1
	201-01	CLEARING AND GRUBBING	LS	1
	202-01.56	REMOVAL OF STR. & OBSTRUCTIONS (5 MANHOLES)	LS	1
	202-01.57	REMOVAL OF STR. & OBSTRUCTIONS (3 CATCHBASINS)	LS	1
(11)	202-02.01	REMOVAL OF PIPE (8",STA. 22+65)	L.F.	14
(11)	202-02.02	REMOVAL OF PIPE (12", STA. 54+00 TO 61+00)	L.F.	564
(11)	202-02.03	REMOVAL OF PIPE (15", STA. 10+46/15+27/58+00)	L.F.	148
(11)	202-02.04	REMOVAL OF PIPE (18", STA. 22+65/55+35)	L.F.	90
(11)	202-02.05	REMOVAL OF PIPE (24", STA. 14+13/55+80)	L.F.	62
	202-03	REMOVAL OF RIGID PAVEMENT, SIDEWALK, ETC.	S.Y.	100
	202-04.01	REMOVAL OF STRUCTURES (33'-3'X3' CONC BOX, STA.28+76)	L.S.	1
	202-06.01	REMOVAL OF BUILDINGS (TRACT NO. 19)	LS	1
	202-06.02	REMOVAL OF BUILDINGS (TRACT NO. 20)	LS	1
	203-01	ROAD & DRAINAGE EXCAVATION (UNCLASSIFIED)	C.Y.	22142
	203-10	EMBANKMENT (COMPACTED IN PLACE)	C.Y.	8364
	203-06	WATER	M.G.	132
	203-10.15	WASTE MATERIAL	C.Y.	13732
(12,13)	209-03.20	FILTER SOCK (8 INCH)	L.F.	2210
	209-05	SEDIMENT REMOVAL	C.Y.	1650
(12,13)	209-08.02	TEMPORARY SILT FENCE (WITH BACKING)	L.F.	1115
(12,13)	209-08.03	TEMPORARY SILT FENCE (WITHOUT BACKING)	L.F.	3366
(12,13)	209-08.05	ENHANCED SILT FENCE CHECK (V-DITCH)	EACH	2
(12,13)	209-08.07	ROCK CHECK DAM PER	EACH	53
(12,13)	209-08.08	ENHANCED ROCK CHECK DAM	EACH	21
	209-09.01	SANDBAGS	BAG	200
(12,13)	209-09.04	SEDIMENT FILTER BAG(15' X 10')	EACH	8
(12,13)	209-09.43	CURB INLET PROTECTION (TYPE 4)	EACH	26
(12,13)	209-40.41	CATCH BASIN FILTER ASSEMBLY(TYPE 1)	EACH	2
(12,13)	209-40.42	CATCH BASIN FILTER ASSEMBLY(TYPE 2)	EACH	1
	303-01	MINERAL AGGREGATE, TYPE A BASE, GRADING D	TON	13173
	303-10.01	MINERAL AGGREGATE (SIZE 57)	TON	168
(17)	303-10.03	MINERAL AGGREGATE (SIZE 68)	TON	102
	307-01.01	ASPHALT CONCRETE MIX (PG64-22) (BPMB-HM) GRADING A	TON	3635
	307-01.08	ASPHALT CONCRETE MIX (PG64-22) (BPMB-HM) GRADING B-M2	TON	2473
	402-01	BITUMINOUS MATERIAL FOR PRIME COAT (PC)	TON	31
	402-02	AGGREGATE FOR COVER MATERIAL	TON	122
	403-01	BITUMINOUS MATERIAL FOR TACK COAT (TC)	TON	14
(14)	411-01.10	ACS MIX(PG64-22) GRADING D	TON	1161
	415-01.01	COLD PLANING BITUMINOUS PAVEMENT	TON	175
(17)	604-01.01	CLASS A CONCRETE (ROADWAY)	C.Y.	58
	607-03.02	18" CONCRETE PIPE CULVERT (CLASS III)	L.F.	3523
	607-05.02	24" CONCRETE PIPE CULVERT (CLASS III)	L.F.	661
	607-07.02	36" CONCRETE PIPE CULVERT (CLASS III)	L.F.	94
	607-09.02	48" CONCRETE PIPE CULVERT (CLASS III)	L.F.	94
	607-39.02	18" PIPE CULVERT (SIDE DRAIN)	L.F.	132
	611-01.02	MANHOLES, > 4' - 8' DEPTH	EACH	1
	611-02.10	JUNCTION BOX, TYPE 1	EACH	1
	611-07.54	18IN ENDWALL (CROSS DRAIN) 3:1	EACH	3
	611-07.63	36IN ENDWALL (CROSS DRAIN) 3:1	EACH	2
	611-07.69	48IN ENDWALL (CROSS DRAIN) 3:1	EACH	2
	611-12.01	CATCH BASINS, TYPE 12, 0' - 4' DEPTH	EACH	3
	611-12.02	CATCH BASINS, TYPE 12, > 4' - 8' DEPTH	EACH	17
	611-14.02	CATCH BASINS, TYPE 14, 4' - 8' DEPTH	EACH	3
	611-14.03	CATCH BASINS, TYPE 14, > 8' - 12' DEPTH	EACH	4
	611-42.01	CATCH BASINS, TYPE 42, 0' - 4' DEPTH	EACH	1

ESTIMATED ROADWAY QUANTITIES

	ITEM NO.	DESCRIPTION	UNIT	QUANTITY
	701-01.01	CONCRETE SIDEWALK (4 ")	S.F.	24368
	701-01.02	CONCRETE HANDICAP RAMP	S.F.	608
	701-02	CONCRETE DRIVEWAY	S.F.	18744
	702-03	CONCRETE COMBINED CURB & GUTTER	C.Y.	1895
	705-08.51	PORTABLE IMPACT ATTENUATOR NCHRP350 TL-3	EACH	2
	709-05.05	MACHINED RIP-RAP (CLASS A-3)	TON	204
	709-05.06	MACHINED RIP-RAP (CLASS A-1)	TON	233
	712-01	TRAFFIC CONTROL	LS	1
	712-02.02	INTERCONNECTED PORTABLE BARRIER RAIL	L.F.	846
	712-02.36	REMOVE AND RELOCATE PORTABLE BARRIER RAIL	L.F.	528
	712-04.01	FLEXIBLE DRUMS (CHANNELIZING)	EACH	102
	712-05.01	WARNING LIGHTS (TYPE A)	EACH	6
	712-06	SIGNS (CONSTRUCTION)	S.F.	262
	712-07.03	TEMPORARY BARRICADES (TYPE III)	L.F.	48
	712-08.03	ARROW BOARD (TYPE C)	EACH	2
	712-09.01	REMOVABLE PAVEMENT MARKING LINE	L.F.	14024
	712-09.02	REMOVABLE PAVEMENT MARKING (8" BARRIER LINE)	L.F.	5628
(1)	713-11.21	P POST SLIP BASE	EACH	16
(2)	713-15	REMOVAL OF SIGNS, POSTS AND FOOTINGS	LS	1
(3)	713-16.20	SIGNS (RI0-15-1 W/ 1-U3 SUPPORT)	EACH	1
(4)	713-16.21	SIGNS (S4-3p,R1-1 & S4-2p W/1-P8 SUPPORT)	EACH	4
(5)	713-16.22	SIGNS (RI0-15 W/P8 SUPPORT)	EACH	2
(6)	713-16.23	SIGNS (W3-3 W/2-P6 SUPPORTS)	EACH	8
(7)	713-16.24	SIGNS (S1-1 & W16-9p W/1-P8 SUPPORT)	EACH	1
(8)	713-16.25	SIGNS (TN-17B W/ 1-U1 SUPPORT)	EACH	1
(16)	716-02.03	PLASTIC PAVEMENT MARKING (CROSS-WALK)	L.F.	333
(16)	716-02.04	PLASTIC PAVEMENT MARKING(CHANNELIZATION STRIPING)	S.Y.	96
(16)	716-02.05	PLASTIC PAVEMENT MARKING (STOP LINE)	L.F.	171
(16)	716-02.06	PLASTIC PAVEMENT MARKING (TURN LANE ARROW)	EACH	15
(16)	716-04.04	PLASTIC PAVEMENT MARKING (TRANSVERSE SHOULDER)	L.F.	322
	716-05.01	PAINTED PAVEMENT MARKING (4" LINE)	L.M.	7.4
(16)	716-05.04	PAINTED PAVEMENT MARKING (CHANNELIZATION STRIPING)	S.Y.	7
	716-12.01	ENHANCED FLATLINE THERMO PVMT MRKNG (4IN LINE)	L.M.	3.1
	716-12.04	ENHANCED FLATLINE THERMO PVMT MRKNG (4IN DOTTED LINE)	L.F.	195
	717-01	MOBILIZATION	LS	1
(9)	730-01.05	REMOVE & RELOCATE SCHOOL SIGNAL EQUIPMENT	LS	1
(10)	730-23.02	STEEL STRAIN POLE (20'-0" MIN.)	EACH	1
	730-26.08	FLASHING WARNING BEACON (DESCRIPTION)	EACH	8
	740-10.03	GEOTEXTILE (TYPE III)(EROSION CONTROL)	S.Y.	4372
	740-11.01	TEMPORARY SEDIMENT TUBE 8IN (DESCRIPTION)	L.F.	2535
	801-01.07	TEMPORARY SEEDING (WITH MULCH)	UNIT	22
	801-02	SEEDING (WITHOUT MULCH)	UNIT	8
(15)	801-03	WATER (SEEDING & SODDING)	M.G.	9
	803-01	SODDING (NEW SOD)	S.Y.	8610
	805-12.02	EROSION CONTROL BLANKET (TYPE II)	S.Y.	1057

FOOTNOTES

1. SLIP BASE REQUIRED ON ALL P6 SUPPORTS.
2. REMOVE SIGN & SUPPORTS (NO FOOTINGS ON THESE SIGNS) ON APPROXIMATELY TWENTY-FIVE SIGNS WITHIN THE LIMITS OF THIS PROJECT OR AS DIRECTED BY THE ENGINEER.
3. ITEM NO. TO INCLUDE ONE R1-1 (30"x30") W/ ONE U3 SUPPORT h=12'0"+-.
4. ITEM NO. TO INCLUDE ONE S4-3p (24"x8"), R1-1 (24"x30') & S4-2p (24"x10") W/ ONE P8 SUPPORT h=13'-0"+-.
5. ITEM NO. TO INCLUDE ONE R10-15 (30"x30") W/ONE U3 SUPPORT h=12'-6"+-.
6. ITEM NO. TO INCLUDE ONE W3-3 (48"x48") W/ TWO P6 SUPPORTS h1= 13'-6"+-, h2= 14'-6"+-.
7. ITEM NO. TO INCLUDE ONE S1-1 (36"x36") & 16-9p (24"x12") W/ ONE P8 SUPPORT.
8. ITEM NO. TO INCLUDE ONE TN-17b (6"x19") W/ONE U1 SUPPORT h=9'-0"+-.
9. ITEM NO. TO INCLUDE ALL ELECTRICIAL CONNECTIONS, WIRING, BRACKETS, CONDUIT, MOUNTING HARDWARE AND ANY OTHER MISCELLIANIOUS ITEMS TO RECONNECT THIS EXISTING SCHOOL FLASHING EQUIPMENT (SIGN FACE W/FLASHERS & CONTROLLER) AND HAVE OPERATING PROPERLY AS DIRECTED BY THE ENGINEER.
10. 20'-0" MIN.STEEL STRAIN POLE TO BE USED FOR SCHOOL SIGNAL SPEED SIGN SUPPORT. HEIGHT OF TN-8-S TO BE A MIN. OF 7'-0". THE FOOTING FOR THE STEEL STRAIN POLE WILL USE A 3'0" DIA. DRILLED SHAFT AND THE DEPTH WILL BE 15'-0"
11. BID PRICE INCLUDES ALL SALVAGE VALUE OF MATERIAL.
12. SEE SUBSECTION 209.07 OF THE STANDARD SPECIFICATIONS FOR MAINTENANCE REPLACEMENT.
13. ALL QUANTITIES TO BE USED AS DIRECTED BY THE ENGINEER.
14. SEE SPECIAL PROVISION NO. 411D.
15. INCLUDES 6 THOUSAND GALLON FOR EROSION AND SEDIMENT CONTROL.
16. THE CONTRACTOR MAY ELECT TO SUBSITUTE PREFORMED PLASTIC FOR THERMOPLASTIC. PREFORMED PLASTIC SHALL BE PAID FOR AT THE SAME UNIT PRICE AS BID FOR THERMOPLASTIC.
17. FOR CONSTRUCTION OF RETAINING WALL.

UNOFFICIAL SET

NOT FOR BIDDING

SEALED BY

STATE OF TENNESSEE
DEPARTMENT OF TRANSPORTATION

ESTIMATED ROADWAY QUANTITIES

27-JAN-2014 10:03
\\JJ03WF01.tdot.state.tn.us\03Shared\SURVEY\DESIGN\PIN 107847.00 Cheatham Co SR 49\002.SHT

TYPE	YEAR	PROJECT NO.	SHEET NO.
R.O.W.	2012	STP-49(26)	2
CONST.	2014	STP-49(26)	2B

TENNESSEE D.O.T.
DESIGN DIVISION
FILE NO.

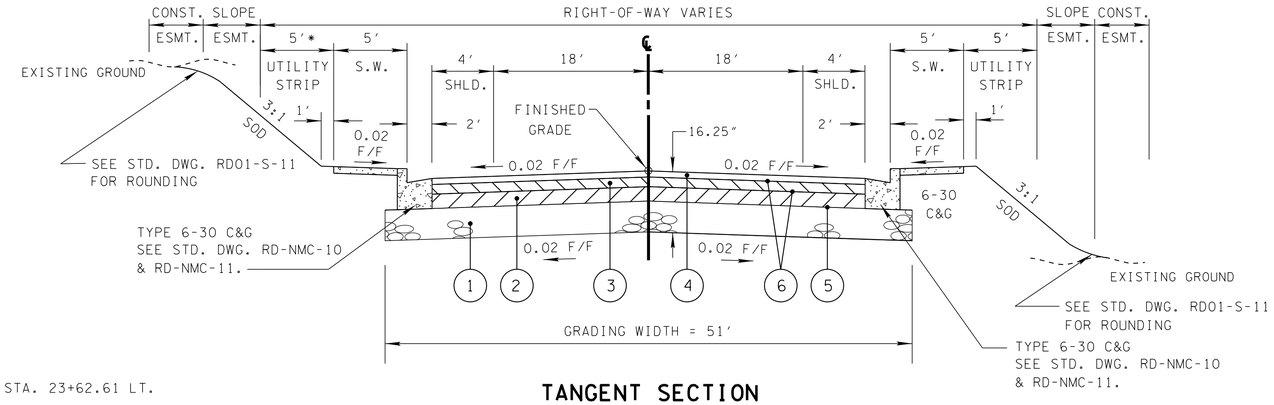

* 4' UTILITY STRIP FROM S.R. 49 STA. 23+62.61 LT. TO STA. 24+82.61 LT. ONLY

TANGENT SECTION

(BASED ON STD. DWG. RD01-TS-6A)

STATE ROUTE 49

FROM STATION 10+00 TO STATION 31+86.10

BUSINESS

SURFACE - 1¼"
BINDER - 2"
BASE - 4"

FIELD OR RESIDENTIAL

SURFACE - 1½"
BINDER - NONE
BASE - 4"

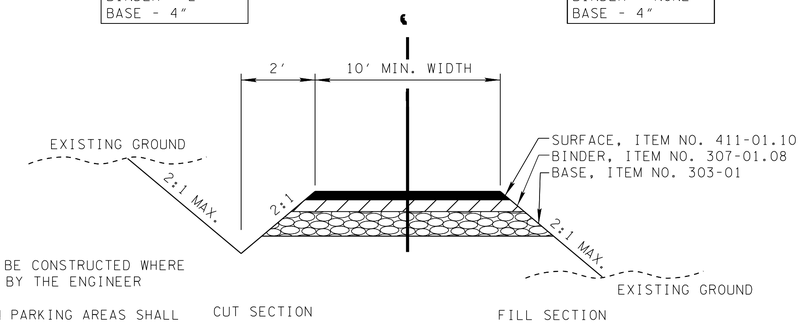

NOTE: DITCH TO BE CONSTRUCTED WHERE DIRECTED BY THE ENGINEER

NOTE: SLOPES IN PARKING AREAS SHALL BE FLATENED TO 12:1 AND DITCH IS TO BE ELIMINATED.

TYPICAL ASPHALT SECTION

PRIVATE DRIVE TO BUSINESS, FIELD, OR RESIDENTIAL PROPERTY

BUSINESS

CONCRETE - 6"
BASE - 4"

FIELD OR RESIDENTIAL

CONCRETE - 6"
BASE - 4"

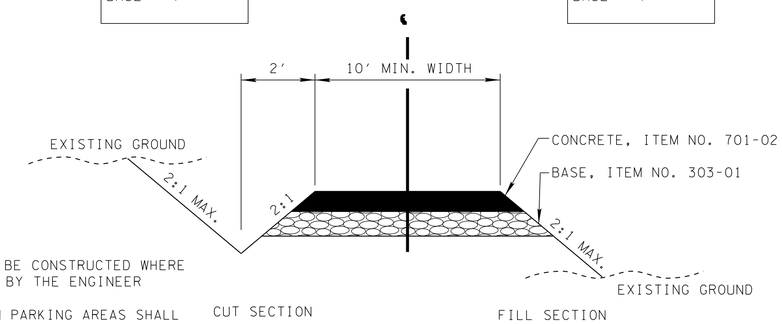

NOTE: DITCH TO BE CONSTRUCTED WHERE DIRECTED BY THE ENGINEER

NOTE: SLOPES IN PARKING AREAS SHALL BE FLATENED TO 12:1 AND DITCH IS TO BE ELIMINATED.

TYPICAL CONCRETE SECTION

PRIVATE DRIVE TO BUSINESS, FIELD, OR RESIDENTIAL PROPERTY

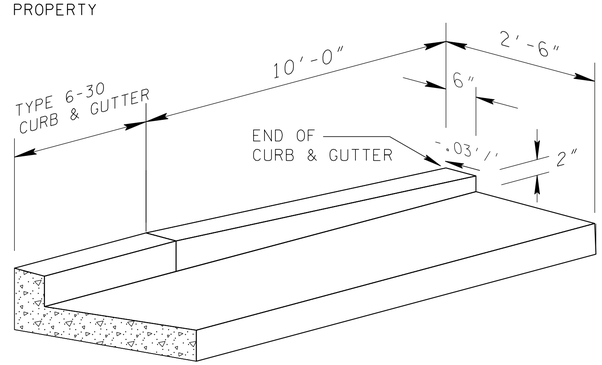

TYPE 6-30 CURB & GUTTER TRANSITION DETAIL

THIS DETAIL SHALL APPLY TO ALL ENDING SECTIONS OF TYPE 6-30 CURB & GUTTER

SEE SHEET 2C FOR PROPOSED PAVEMENT SCHEDULE

UNOFFICIAL SET

NOT FOR BIDDING

SEALED BY

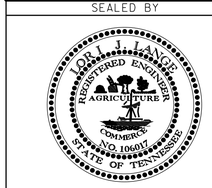

STATE OF TENNESSEE
DEPARTMENT OF TRANSPORTATION

TYPICAL SECTIONS

N.T.S.

27-JAN-2014 10:04
\\JJ03WF01.tdot.state.tn.us\03Shared\SURVEY\DESIGN\PIN 107847.00 Cheatham Co SR 49\002B.SHT

TYPE	YEAR	PROJECT NO.	SHEET NO.
R.O.W.	2012	STP-49(26)	2A
CONST.	2014	STP-49(26)	2C

TENNESSEE D.O.T.
DESIGN DIVISION
FILE NO.

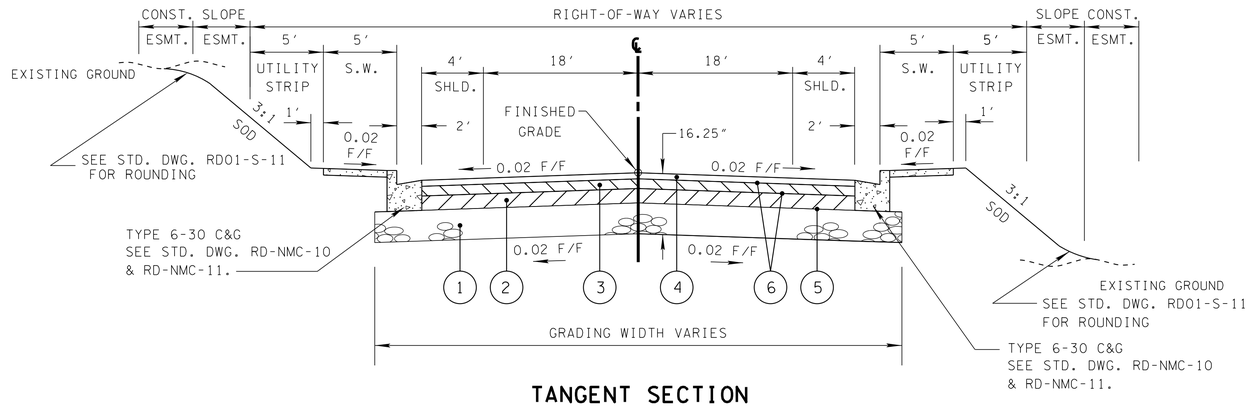

TANGENT SECTION

(BASED ON STD. DWG. RD01-TS-6A)

OLD CLARKSVILLE PIKE

STA. 50+00.00 TO STA. 51+16.22
STA. 51+97.44 TO STA. 53+02.01
STA. 54+56.72 TO STA. 57+24.94
STA. 57+65.33 TO STA. 60+04.63

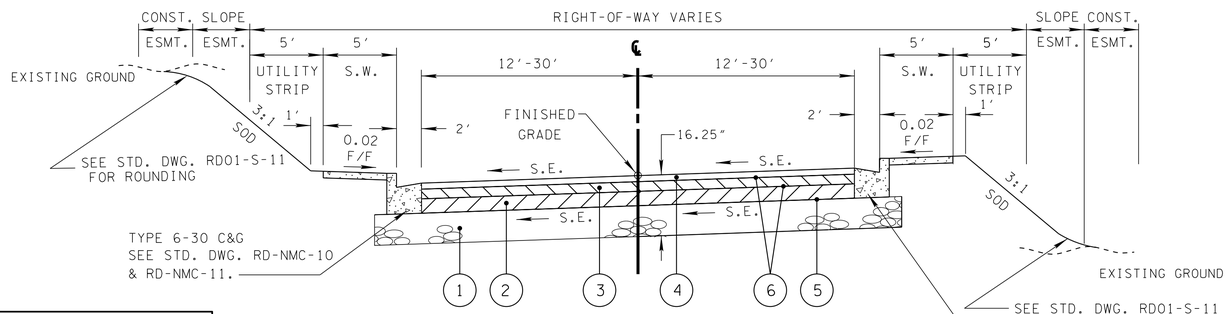

(A) THE SLOPES OF THE SHOULDER AND ROADWAY PAVEMENT SHALL NOT EXCEED AN ALGEBRAIC DIFFERENCE OF 0.07.

SUPERELEVATED SECTION

(BASED ON STD. DWG. RD01-TS-6A)

OLD CLARKSVILLE PIKE

STA. 51+16.22 TO STA. 51+97.44
STA. 53+02.01 TO STA. 54+56.72
STA. 57+24.94 TO STA. 57+65.33
STA. 60+04.63 TO STA. 62+00.00

PROPOSED PAVEMENT SCHEDULE	
(1) MINERAL AGGREGATE @ 10.00" THICK 303-01 MINERAL AGGREGATE, TYPE A BASE, GRADING D	(4) SURFACE @ 1.25" THICK 411-01.10 ASPHALT CEMENT (PG64-22) (ACS) GRADING D
(2) BLACK BASE @ 3.00" THICK 307-01.01 ASPHALT CONCRETE MIX (PG64-22) (BPMB-HM) GRADING A	(5) PRIME COAT 402-01 BITUMINOUS MATERIAL FOR PRIME COAT (PC) @ .35 GAL/SQ.YD. 402-02 AGGREGATE FOR COVER MATERIAL (PC) @ 8 - 12 LB./SQ. YD.
(3) BINDER @ 2.00" THICK 307-01.08 ASPHALT CONCRETE MIX (PG64-22) (BPMB-HM) GRADING B-M2	(6) TACK COAT 403-01 BITUMINOUS MATERIAL FOR TACK COAT (TC) @ 0.07 GAL./ SQ. YD.

UNOFFICIAL SET

NOT FOR BIDDING

SEALED BY

STATE OF TENNESSEE
DEPARTMENT OF TRANSPORTATION

TYPICAL SECTIONS

N.T.S.

27-JAN-2014 10:04
\\JO3WF01.tdot.state.tn.us\03Shared\SURVEY\DESIGN\PIN 107847.00 Cheatham Co SR 49\002C.SHT

TYPE	YEAR	PROJECT NO.	SHEET NO.
CONST.	2014	STP-49(26)	2D

GENERAL NOTES

GRADING

(1) ANY AREA THAT IS DISTURBED OUTSIDE LIMITS OF CONSTRUCTION DURING THE LIFE 0F THIS PROJECT SHALL BE REPAIRED BY THE CONTRACTOR AT HIS EXPENSE.

(2) THE CONTRACTOR SHALL NOT DISPOSE OF ANY MATERIAL EITHER ON OR OFF STATE-OWNED R.O.W. IN A REGULATORY FLOOD WAY AS DEFINED BY THE FEDERAL EMERGENCY MANAGEMENT AGENCY WITHOUT APPROVAL BY SAME. ALL MATERIAL SHALL BE DISPOSED OF IN UPLAND (NON-WETLAND) AREAS AND ABOVE ORDINARY HIGH WATER OF ANY ADJACENT WATERCOURSE. THIS DOES NOT ELIMINATE THE NEED TO OBTAIN ANY OTHER LICENSES OR PERMITS THAT MAY BE REQUIRED BY ANY OTHER FEDERAL, STATE OR LOCAL AGENCY.

SEEDING AND SODDING

(3) SOD SHALL BE PLACED AT LOCATIONS SHOWN ON THE PLANS TO PREVENT DAMAGE TO ADJACENT FACILITIES AND PROPERTY DUE TO EROSION ON ALL NEWLY GRADED CUT AND FILL SLOPES AS WORK PROGRESSES.

(4) ITEM NO. 801-02, SEEDING (WITHOUT MULCH) AND EROSION CONTROL BLANKET , SHALL BE PLACED AT LOCATIONS SHOWN ON THE PLANS AS WELL AS LOCATIONS DIRECTED BY THE ENGINEER.

DRAINAGE

(5) THE CONTRACTOR SHALL SHAPE DITCHES TO THE SPECIFIED DESIGN. THIS WORK WILL NOT BE MEASURED AND PAID FOR DIRECTLY, BUT THE COST WILL BE INCLUDED IN THE COST OF OTHER ITEMS.

(6) EXCAVATION FOR CATCH BASIN, CULVERTS AND MANHOLES WILL NOT BE MEASURED AND PAID FOR DIRECTLY, BUT WILL BE INCLUDED IN THE PRICE BID PER LINEAR FOOT OF PIPE (PIPE CULVERTS, STORM SEWERS, CONDUITS, ALL OTHER CULVERTS AND MINOR STRUCTURES).

(7) THE CUTTING OF INLET AND OUTLET DITCHES WHERE SHOWN ON PLANS OR AS DIRECTED BY THE ENGINEER WILL BE MEASURED AND PAID FOR AS ITEM NO. 203-01 ROAD AND DRAINAGE EXCAVATION (UNCLASSIFIED).

(8) WHERE A CULVERT (PIPE, SLAB OR BOX) IS MOVED TO A NEW LOCATION OTHER THAN THAT SHOWN ON THE PLANS, INCREASING OR DECREASING THE AMOUNT OF CULVERT EXCAVATION, NO INCREASE OR DECREASE IN THE AMOUNT OF PAYMENT WILL BE MADE DUE TO SUCH CHANGE.

(9) DURING CONSTRUCTION OF DRAINAGE STRUCTURES ALL COST ASSOCIATED WITH MAINTAINING THE FLOW OF WATER AND TRAFFIC, AT THESE STRUCTURES, DURING THE PHASED CONSTRUCTION OF THIS PROJECT ARE TO BE INCLUDED IN THE UNIT PRICE OF THE DRAINAGE STRUCTURES AND TRAFFIC CONTROL ITEMS.

MISCELLANEOUS

(10) ALL DETOUR, ACCESS, SERVICE AND FRONTAGE ROADS SHALL BE CONSTRUCTED WITH A MINIMUM OF ONE (1) COURSE OF BASE MATERIAL BEFORE TRAFFIC IS INTERRUPTED ON EXISTING ROADS.

(11) THE CONTRACTOR SHALL BE REQUIRED TO REMOVE AND RESET MAILBOXES WHERE AND AS DIRECTED BY THE ENGINEER.

(12) NOTHING IN THE GENERAL NOTES OR SPECIAL PROVISIONS SHALL RELIEVE THE CONTRACTOR FROM HIS RESPONSIBILITIES TOWARD THE SAFETY AND CONVENIENCE OF THE GENERAL PUBLIC AND THE RESIDENTS ALONG THE PROPOSED CONSTRUCTION AREA

PAVEMENT MARKINGS

TEMPORARY PAVEMENT MARKING ON INTERMEDIATE LAYERS

(13) TEMPORARY PAVEMENT LINE MARKINGS ON INTERMEDIATE LAYERS OF PAVEMENT SHALL BE REFLECTIVE TAPE OR REFLECTORIZED PAINT INSTALLED TO PERMANENT STANDARDS AT THE END OF EACH DAYS WORK. SHORT, UNMARKED SECTIONS SHALL NOT BE ALLOWED. THESE MARKINGS WILL BE MEASURED AND PAID FOR UNDER ITEM NO. 716-05.01, PAINTED PAVEMENT MARKING (4" LINE), L.M.

FINAL PAVEMENT MARKING IF 4" ENHANCED FLATLINE THERMOPLASTIC IS USED

(14) PERMANENT PAVEMENT LINE MARKINGS SHALL BE 4" ENHANCED FLATLINE THERMOPLASTIC INSTALLED TO PERMANENT STANDARDS AT THE END OF EACH DAY'S WORK. SHORT UNMARKED SECTIONS SHALL NOT BE ALLOWED. PAVEMENT MARKINGS WILL BE MEASURED AND PAID FOR UNDER ITEM NO. 716-12.01, ENHANCED FLATLINE THERMO PVMT MRKNG (4IN LINE), L.M. THE CONTRACTOR SHALL HAVE THE OPTION OF USING REFLECTORIZED PAINT INSTALLED TO PERMANENT STANDARDS AT THE END OF EACH DAY'S WORK AND THEN INSTALLING THE PERMANENT MARKINGS AFTER THE PAVING OPERATION IS COMPLETED. THE TEMPORARY MARKINGS FOR THE FINAL SURFACE WILL NOT BE MEASURED AND PAID FOR DIRECTLY, BUT THE COSTS ARE TO BE INCLUDED IN THE PRICE BID FOR THE PERMANENT MARKINGS.

DETOURS, LANE SHIFTS AND MEDIAN CROSS-OVERS

(15) THE PAVEMENT MARKING ON THE LANE SHIFT FOR LANE LINES WILL BE INSTALLED AND MAINTAINED TO THE SAME STANDARDS AS FOR PERMANENT MARKINGS ON THE MAIN ROADWAY. THESE MARKINGS SHALL BE IN PLACE PRIOR TO ALLOWING TRAFFIC ONTO THE PAVEMENT. THESE PAVEMENT MARKINGS WILL BE MEASURED AND PAID FOR UNDER ITEM NO. 716-05.01 PAINTED PAVEMENT MARKING (4" LINE) LIN. MI.

(16) BEFORE OPENING THE LANE SHIFTS TO TRAFFIC, THE TRANSITIONAL MARKINGS ON THE EXISTING ROADWAY MUST BE IN PLACE. THESE MARKINGS WILL BE MEASURED AND PAID FOR UNDER ITEM 712-09.01 REMOVABLE PAVEMENT MARKING LINE, LIN. FT. ALL EXISTING MARKINGS IN THE AREA OF THESE TRANSITIONAL MARKINGS SHALL BE OBLITERATED AND ALL EXISTING RAISED PAVEMENT MARKERS SHALL BE REMOVED TO ELIMINATE CONFLICTING MARKINGS. REMOVAL OF THE EXISTING CONFLICTING MARKINGS AND RAISED PAVEMENT MARKERS WILL NOT BE MEASURED AND PAID FOR DIRECTLY, BUT THE COST WILL BE INCLUDED IN ITEM NO. 712-01 TRAFFIC CONTROL, LUMP SUM.

(17) BEFORE OPENING THE LANE SHIFTS TO TRAFFIC, THE TRANSITIONAL MARKINGS ON THE EXISTING ROADWAY MUST BE IN PLACE. ALL EXISTING MARKINGS IN THE AREA OF THESE TRANSITIONAL MARKINGS SHALL BE OBLITERATED AND ALL EXISTING RAISED PAVEMENT MARKERS SHALL BE REMOVED TO ELIMINATE CONFLICTING MARKINGS. REMOVAL OF THE EXISTING CONFLICTING MARKINGS AND RAISED PAVEMENT MARKERS WILL NOT BE MEASURED AND PAID FOR DIRECTLY, BUT THE COST WILL BE INCLUDED IN ITEM NO. 712-01 TRAFFIC CONTROL, LUMP SUM.

PAVEMENT

PAVING

(18) THE CONTRACTOR SHALL BE REQUIRED TO PAVE IN THE DIRECTION OF TRAFFIC.

SIGNING

(19) AFTER THE SIGN LOCATIONS HAVE BEEN STAKED, BUT PRIOR TO ORDERING ANY MATERIAL FOR THE SUPPORTS, THERE SHALL BE A FIELD INSPECTION AND APPROVAL BY THE REGIONAL CONSTRUCTION OFFICE.

(20) ALL SIGNS MARKED "TO BE REMOVED" ARE TO BE REMOVED BY THE CONTRACTOR AND PAID FOR UNDER ITEM 713-15 AND BECOME THE PROPERTY OF THE CONTRACTOR.

(21) THE LETTERS, DIGITS, ARROWS, BORDERS, AND ALPHABET ACCESSORIES ON ALL FLAT SHEET SIGNS SHALL BE APPLIED BY SILK SCREENING PROCESS.

SIGNALIZATION

(22) EQUIPMENT AND INSTALLATION OF TRAFFIC SIGNALS SHALL COMPLY WITH TDOT STANDARD SPECIFICATIONS, SECTION 730.

(23) SALVAGEABLE EQUIPMENT SHALL BECOME THE PROPERTY OF CHEATHAM COUNTY AND SHALL BE STOCKPILED AT A LOCATION DESIGNATED BY THE ENGINEER FOR PICKUP BY CHEATHAM COUNTY.

(24) IF RESURFACING IS INCLUDED IN THE PROJECT, SIGNAL DETECTION LOOPS SHALL BE INSTALLED BEFORE THE FINAL SURFACE IS APPLIED.

(25) ANY SIGNAL HEADS, WHEN VISIBLE TO DRIVERS BUT NOT OPERATIONAL, SHALL BE COMPLETELY COVERED.

(26) THE PROJECT ENGINEER SHALL NOTIFY THE LOCAL GOVERNMENTAL AGENCY RESPONSIBLE FOR TRAFFIC CONTROL MAINTENANCE AT LEAST ONE DAY IN ADVANCE OF THE COLD PLANING ACTIVITY AT SIGNALIZED INTERSECTIONS WHERE DETECTOR LOOPS ARE ON THE PAVEMENT. THE MAINTAINING AGENCY WILL THEN BE RESPONSIBLE FOR DISCONNECTING THE LOOP DETECTORS AND MAKING ANY NECESSARY TIMING ADJUSTMENTS IN THE SIGNAL CONTROLLER PRIOR TO THE CONSTRUCTION.

(27) LOOPS SHALL BE INSTALLED IN THE LEVELING COURSE IF A LEVELING COURSE IS PROVIDED.

(28) LOOP REPLACEMENT SHALL BE IN ACCORDANCE WITH SECTION 730 OF THE STANDARD SPECIFICATIONS.

CONSTRUCTION WORK ZONE & TRAFFIC CONTROL

(29) ADVANCED WARNING SIGNS SHALL NOT BE DISPLAYED MORE THAN FORTY-EIGHT (48) HOURS BEFORE PHYSICAL CONSTRUCTION BEGINS. SIGNS MAY BE ERECTED UP TO ONE WEEK BEFORE NEEDED, IF THE SIGN FACE IS FULLY COVERED.

(30) IF THE CONTRACTOR MOVES OFF THE PROJECT, HE SHALL COVER OR REMOVE ALL UNNEEDED SIGNS AS DIRECTED BY THE ENGINEER. COSTS OF REMOVAL, COVERING, AND REINSTALLING SIGNS SHALL NOT BE MEASURED AND PAID FOR SEPARATELY, BUT ALL COSTS SHALL BE INCLUDED IN THE ORIGINAL UNIT PRICE BID FOR ITEM NO 712-06, SIGNS (CONSTRUCTION) PER SQUARE FOOT.

(31) A LONG TERM BUT SPORADIC USE WARNING SIGN, SUCH AS A FLAGGER SIGN, MAY REMAIN IN PLACE WHEN NOT REQUIRED PROVIDED THE SIGN FACE IS FULLY COVERED.

(32) TRAFFIC CONTROL DEVICES SHALL NOT BE DISPLAYED OR ERECTED UNLESS RELATED CONDITIONS ARE PRESENT NECESSITATING WARNING.

(33) USE OF BARRICADES, PORTABLE BARRIER RAILS, VERTICAL PANELS, AND DRUMS SHALL BE LIMITED TO THE IMMEDIATE AREAS OF CONSTRUCTION WHERE A HAZARD IS PRESENT. THESE DEVICES SHALL NOT BE STORED ALONG THE ROADWAY WITHIN THIRTY (30) FEET OF THE EDGE OF THE TRAVELED WAY BEFORE OR AFTER USE UNLESS PROTECTED BY GUARDRAIL, BRIDGE RAIL, AND/OR BARRIERS INSTALLED FOR OTHER PURPOSES FOR ROADWAYS WITH CURRENT ADT'S LESS THAN 1500 AND DESIGN SPEED OF LESS THAN 60 MPH. THIS DISTANCE SHALL INCREASE TO FORTY-FIVE (45) FEET FOR ROADWAYS WITH CURRENT ADT'S OF 1500 OR GREATER AND DESIGN SPEED OF 60 MPH OR GREATER OR ON THE OUTSIDE OF A HORIZONTAL CURVE. THESE DEVICES SHALL BE REMOVED FROM THE CONSTRUCTION WORK ZONE WHEN THE ENGINEER DETERMINES THEY ARE NO LONGER NEEDED. WHERE THERE IS INSUFFICIENT RIGHT-OF-WAY TO PROVIDE FOR THIS REQUIRED SETBACK, THE CONTRACTOR SHALL DETERMINE THE ALTERNATE LOCATIONS AND REQUEST THE ENGINEER'S APPROVAL TO USE THEM.

UNOFFICIAL SET

NOT FOR BIDDING

SEALED BY

STATE OF TENNESSEE
DEPARTMENT OF TRANSPORTATION

GENERAL NOTES

27-JAN-2014 10:04
\\JU03WF01.tdot.state.tn.us\03Shared\SURVEY\DESIGN\PIN 107847.00 Cheatham Co SR 49\002D.SHT

TYPE	YEAR	PROJECT NO.	SHEET NO.
CONST.	2014	STP-49(26)	2E

TENNESSEE D.O.T.
DESIGN DIVISION
FILE NO.

GENERAL NOTES (CONTD.)

CONSTRUCTION WORK ZONE & TRAFFIC CONTROL (CONTD.)

(33) THE CONTRACTOR SHALL NOT BE PERMITTED TO PARK ANY VEHICLES OR CONSTRUCTION EQUIPMENT DURING PERIODS OF INACTIVITY, WITHIN THIRTY (30) FEET OF THE EDGE OF PAVEMENT WHEN THE LANE IS OPEN TO TRAFFIC UNLESS PROTECTED BY GUARDRAIL, BRIDGE RAIL, AND/OR BARRIERS INSTALLED FOR OTHER PURPOSES FOR ROADWAYS WITH CURRENT ADT'S LESS THAN 1500 AND DESIGN SPEED OF LESS THAN 60 MPH. THIS DISTANCE SHALL BE INCREASED TO FORTY-FIVE (45) FEET FOR ROADWAYS WITH CURRENT ADT'S OF 1500 OR GREATER AND DESIGN SPEED OF 60 MPH OR GREATER OR ON THE OUTSIDE OF A HORIZONTAL CURVE. PRIVATELY OWNED VEHICLES SHALL NOT BE ALLOWED TO PARK WITHIN THIRTY (30) FEET OF A OPEN TRAFFIC LANE AT ANY TIME UNLESS PROTECTED AS DESCRIBED ABOVE FOR ROADWAYS WITH CURRENT ADT'S LESS THAN 1500 AND DESIGN SPEED OF LESS THAN 60 MPH. THIS DISTANCE SHALL BE INCREASED TO FORTY-FIVE (45) FEET FOR ROADWAYS WITH CURRENT ADT'S OF 1500 OR GREATER AND DESIGN SPEED OF 60 MPH OR GREATER OR ON THE OUTSIDE OF A HORIZONTAL CURVE.. WHERE THERE IS INSUFFICIENT RIGHT-OF-WAY TO PROVIDE FOR THIS REQUIRED SETBACK, THE CONTRACTOR SHALL DETERMINE THE ALTERNATE LOCATIONS AND REQUEST THE ENGINEER'S APPROVAL TO USE THEM.

(34) ALL DETOUR AND CONSTRUCTION SIGNING SHALL BE IN STRICT ACCORDANCE WITH THE MANUAL ON UNIFORM TRAFFIC CONTROL DEVICES.

(35) ALL DETOURS SHALL BE PAVED, STRIPED, SIGNED AND THE VERTICAL PANELS ARE TO BE IN PLACE BEFORE IT IS OPENED TO TRAFFIC.

EROSION PREVENTION AND SEDIMENT CONTROL

DISTURBED AREA

(36) AREAS TO BE UNDISTURBED SHALL BE CLEARLY MARKED IN THE FIELD BEFORE CONSTRUCTION ACTIVITIES BEGIN.

(37) PRE-CONSTRUCTION VEGETATIVE GROUND COVER SHALL NOT BE DESTROYED, REMOVED OR DISTURBED (I.E. CLEARING AND GRUBBING INITIATED) MORE THAN 15 CALENDAR DAYS PRIOR TO GRADING OR EARTH MOVING ACTIVITIES UNLESS THE AREA IS MULCHED, SEEDED WITH MULCH, OR OTHER TEMPORARY COVER IS INSTALLED.

(38) CLEARING, GRUBBING, AND OTHER DISTURBANCE TO RIPARIAN VEGETATION SHALL BE LIMITED TO THE MINIMUM NECESSARY FOR SLOPE CONSTRUCTION AND EQUIPMENT OPERATIONS. EXISTING VEGETATION SHOULD BE PRESERVED TO THE MAXIMUM EXTENT POSSIBLE. UNNECESSARY VEGETATION REMOVAL IS PROHIBITED.

(39) ALL DISTURBED AREAS SHALL BE PROPERLY STABILIZED AS SOON AS PRACTICABLE. PRIORITY SHALL BE GIVEN TO FINISHING OPERATIONS AND PERMANENT EPSC MEASURES OVER TEMPORARY EPSC MEASURES ON ALL PROJECTS.

(40) CONSTRUCTION SHALL BE SEQUENCED AND STAGED TO MINIMIZE THE EXPOSURE TIME OF GRADED OR DENUDED SOIL AREAS, PRESERVE TOPSOIL, AND MINIMIZE SOIL COMPACTION.

(41) NO MORE THAN 50 ACRES OF ACTIVE SOIL DISTURBANCE IS ALLOWED AT ANY TIME DURING THE CONSTRUCTION OF THE PROJECT. OFF-SITE BORROW OR WASTE AREAS ARE TO BE INCLUDED IN THE TOTAL DISTURBED AREA IF THE BORROW OR WASTE AREA IS EXCLUSIVE TO THE PROJECT PER TDOT'S WASTE AND BORROW MANUAL.

SEDIMENT CONTROL

(42) EPSC MEASURES SHALL BE INSTALLED AND FUNCTIONAL PRIOR TO ANY EARTH MOVING OPERATIONS, AND SHALL BE MAINTAINED THROUGHOUT THE CONSTRUCTION PERIOD.

(43) THE CONTRACTOR SHALL ESTABLISH AND MAINTAIN A PROACTIVE METHOD TO PREVENT THE OFF-SITE MIGRATION OR DEPOSIT OF SEDIMENT ON ROADWAYS USED BY THE GENERAL PUBLIC. IF SEDIMENT ESCAPES THE CONSTRUCTION SITE, OFF-SITE ACCUMULATIONS OF SEDIMENT THAT HAVE NOT REACHED A STREAM MUST BE REMOVED AT A FREQUENCY SUFFICIENT TO MINIMIZE OFF-SITE IMPACTS (E.G., FUGITIVE SEDIMENT THAT HAS ESCAPED THE CONSTRUCTION SITE AND HAS COLLECTED IN A STREET MUST BE REMOVED SO THAT IT IS NOT SUBSEQUENTLY WASHED INTO STORM SEWERS AND STREAMS BY THE NEXT RAIN AND/OR SO THAT IT DOES NOT POSE A SAFETY HAZARD TO USERS OF PUBLIC STREETS). ARRANGEMENTS CONCERNING REMOVAL OF SEDIMENT ON ADJOINING PROPERTY MUST BE SETTLED WITH THE ADJOINING PROPERTY OWNER BEFORE REMOVAL OF SEDIMENT.

(44) WATER PUMPED FROM WORK AREAS AND EXCAVATION MUST BE HELD IN SETTLING BASINS OR TREATED BY FILTRATION OR CHEMICAL TREATMENT PRIOR TO ITS DISCHARGE INTO SURFACE WATERS. ALL PHYSICAL AND/OR CHEMICAL TREATMENT WILL BE APPLIED IN ACCORDANCE WITH MANUFACTURER'S GUIDELINES AND FULLY DESCRIBED IN THE EPSC PLANS. WATER MUST BE HELD IN SETTLING BASINS UNTIL AT LEAST AS CLEAR AS THE RECEIVING WATERS. SETTLING BASINS SHALL NOT BE LOCATED CLOSER THAN 20 FEET FROM THE TOP BANK OF A STREAM. SETTLING BASINS AND SEDIMENT TRAPS SHALL BE PROPERLY DESIGNED ACCORDING TO THE SIZE OF THE DRAINAGE AREAS OR VOLUME OF WATER TO BE TREATED. TREATED WATER MUST BE DISCHARGED THROUGH A PIPE OR WELL- VEGETATED OR LINED CHANNEL, SO THAT THE DISCHARGE DOES NOT CAUSE EROSION OR SEDIMENT TRANSPORT. DISCHARGES FROM BASINS AND IMPOUNDMENTS SHALL UTILIZE OUTLET STRUCTURES THAT ONLY WITHDRAW WATER FROM NEAR THE SURFACE OF THE BASIN OR IMPOUNDMENT. DISCHARGES MUST NOT CAUSE AN OBJECTIONABLE COLOR CONTRAST WITH THE RECEIVING STREAM.

(45) CHECK DAMS SHALL BE USED WHERE RUNOFF IS CONCENTRATED. CLEAN ROCK, BRUSH, GABION, OR SANDBAG CHECK DAMS SHALL BE PROPERLY CONSTRUCTED TO REDUCE VELOCITY AND CONTROL EROSION.

(46) FOR AN OUTFALL IN A DRAINAGE AREA OF 10 ACRES OR MORE, A TEMPORARY (OR PERMANENT) SEDIMENT BASIN OR EQUIVALENT CONTROL MEASURES THAT PROVIDES STORAGE FOR A CALCULATED VOLUME OF RUNOFF FROM A MINIMUM 2-YEAR/ 24-HOUR STORM EVENT, SHALL BE PROVIDED UNTIL FINAL STABILIZATION OF THE SITE. THE ENVIRONMENTAL AND ROOADWAY DESIGN DIVISIONS MAY BE CONTACTED TO REVIEW AND CONCUR WITH ANY REVISION OF THE SWPPP BEFORE DISTURBANCE OF THE OUTFALL PROCEEDS.

(47) IF PERMANENT OR TEMPORARY VEGETATION IS TO BE USED AS AN EPSC MEASURE, THEN THE TIMING OF PLANTING OF VEGETATION SHALL BE SHOWN IN THE SWPPP. DELAYING PLANTING OF COVER VEGETATION UNTIL WINTER MONTHS OR DRY MONTHS SHOULD BE AVOIDED, IF POSSIBLE.

(48) OFFSITE VEHICLE TRACKING OF SEDIMENTS AND THE GENERATION OF DUST SHALL BE MINIMIZED. A STABILIZED CONSTRUCTION ACCESS (A POINT OF ENTRANCE/EXIT TO THE CONSTRUCTION PROJECT) SHALL BE PROVIDED, AS NEEDED, TO REDUCE THE TRACKING OF MUD AND DIRT ONTO PUBLIC ROADS BY CONSTRUCTION VEHICLES.

(49) TEMPORARY EPSC MEASURES MAY BE REMOVED AT THE BEGINNING OF THE WORKDAY, BUT MUST BE REPLACED AT THE END OF THE WORKDAY.

INSPECTION, MAINTENANCE, REPAIR

(50) EPSC CONTROLS WILL BE MAINTAINED IN ACCORDANCE WITH TDOT STANDARD DRAWINGS AND GOOD ENGINEERING PRACTICES.

(51) INSPECTION, REPAIR, AND MAINTENANCE OF EPSC MEASURES/STRUCTURES IS TO BE PERFORMED ON A REGULAR BASIS. SEDIMENT SHALL BE REMOVED FROM SEDIMENT CONTROL STRUCTURES WHEN THE DESIGN CAPACITY HAS BEEN REDUCED BY FIFTY PERCENT (50%). DURING SEDIMENT REMOVAL, THE CONTRACTOR SHALL TAKE CARE TO ENSURE THAT STRUCTURAL COMPONENTS OF EPSC MEASURES ARE NOT DAMAGED AND THUS MADE INEFFECTIVE. IF DAMAGE DOES OCCUR, THE CONTRACTOR SHALL REPAIR THE STRUCTURES AT THE CONTRACTOR'S OWN EXPENSE.

(52) SEDIMENT REMOVED FROM SEDIMENT CONTROL STRUCTURES SHALL BE PLACED AND BE TREATED IN A MANNER SO THAT THE SEDIMENT IS CONTAINED WITHIN THE PROJECT LIMITS AND DOES NOT MIGRATE INTO WATERS OF THE STATE/U.S. COST FOR THIS TREATMENT IS TO BE INCLUDED IN PRICE BID FOR ITEM NO. 209-05 SEDIMENT REMOVAL, C.Y.

(53) THE CONTRACTOR SHALL INSTALL A RAIN GAUGE EVERY LINEAR MILE AT ALL SITES WHERE CLEARING, GRUBBING, EXCAVATION, GRADING CUTTING OR FILLING IS BEING ACTIVELY PERFORMED, OR EXPOSED SOIL HAS NOT YET BEEN PERMANENTLY STABILIZED. IF THE PROJECT LENGTH IS LESS THAN ONE LINEAR MILE, ONE RAIN GAUGE SHALL BE INSTALLED AT THE CENTER OF THE PROJECT OR AS INDICATED BY THE TDOT EPSC INSPECTOR. THE CONTRACTOR SHALL ENSURE THAT EACH GAUGE IS MAINTAINED IN GOOD WORKING CONDITION. TDOT AND/OR THE CONTRACTOR SHALL RECORD DAILY PRECIPITATION AND FORECASTED PERCENTAGE OF PRECIPITATION IN DETAILED RECORDS OF RAINFALL EVENTS INCLUDING DATES, AMOUNTS OF RAINFALL PER GAUGE, THE ESTIMATED DURATION (OR STARTING AND ENDING TIMES), AND FORECASTED PERCENTAGE OF PRECIPITATION FOR THE PROJECT. THIS INFORMATION SHALL BE PROVIDED TO THE ENGINEER ON A MONTHLY BASIS. THE COST FOR THE RAIN GAUGES IS TO BE INCLUDED IN THE UNIT BID PRICES FOR OTHER ITEMS. RAIN GAUGES SHALL BE AS SPECIFIED IN THE APPROVED TDOT RAINFALL MONITORING PLAN.

(54) INSPECTION OF EPSC MEASURES SHALL BE DONE AT LEAST TWICE PER CALENDAR WEEK AT LEAST 72 HOURS APART. A CALENDAR WEEK IS DEFINED AS SUNDAY THROUGH SATURDAY. QUALITY ASSURANCE/QUALITY CONTROL SITE ASSESSMENT OF EPSC SHALL BE PERFORMED PER THE TDOT ENVIRONMENTAL DIVISION'S COMPREHENSIVE INSPECTION OFFICE GUIDELINES.

(55) OUTFALL POINTS SHALL BE INSPECTED TO ASCERTAIN WHETHER EPSC MEASURES ARE EFFECTIVE IN PREVENTING SIGNIFICANT IMPACTS TO SURROUNDING WATERS. WHERE DISCHARGE LOCATIONS ARE INACCESSIBLE, NEARBY DOWNSTREAM LOCATIONS SHALL BE INSPECTED. LOCATIONS WHERE VEHICLES ENTER AND EXIT THE SITE SHALL BE INSPECTED FOR EVIDENCE OF OFF-SITE ROADWAY SEDIMENT TRACKING.

(56) UPON CONCLUSION OF THE INSPECTIONS, EPSC MEASURES FOUND TO BE INEFFECTIVE SHALL BE REPAIRED, REPLACED, OR MODIFIED BEFORE THE NEXT RAIN EVENT, IF POSSIBLE, BUT IN NO CASE MORE THAN 24 HOURS AFTER THE INSPECTION OR WHEN THE CONDITION IS IDENTIFIED. IF THE REPAIR, REPLACEMENT OR MODIFICATION IS NOT PRACTICAL WITHIN THE TIMEFRAME, WRITTEN DOCUMENTATION MUST BE PROVIDED IN THE FIELD BOOK AND AN ESTIMATED REPAIR, REPLACEMENT OR MODIFICATION SCHEDULE SHALL BE DOCUMENTED WITHIN 24 HOURS AFTER IDENTIFICATION.

(57) THE TDOT PROJECT SUPERVISOR (OR THEIR DESIGNEE) AND THE CONTRACTOR'S SITE SUPERINTENDENT ARE RESPONSIBLE FOR INSPECTIONS. MAINTENANCE AND REPAIR ACTIVITIES ARE THE RESPONSIBILITY OF THE CONTRACTOR. THE TDOT PROJECT SUPERVISOR OR THEIR DESIGNEE WILL COMPLETE THE INSPECTION REPORTS AND DISTRIBUTE COPIES PER THE CONTRACT.

MATERIALS

(58) WASTE AND BORROW AREAS SHALL BE LOCATED IN NON-WETLAND AREAS AND ABOVE THE 100-YEAR, FEDERAL EMERGENCY MANAGEMENT AGENCY FLOODPLAIN. BORROW AND WASTE DISPOSAL AREAS SHALL NOT AFFECT ANY WATERS OF THE STATE/U.S. UNLESS THESE AREAS ARE SPECIFICALLY COVERED BY AN ARAP, 404, OR NPDES PERMIT, OBTAINED SOLELY BY THE CONTRACTOR.

UNOFFICIAL SET

NOT FOR BIDDING

SEALED BY

STATE OF TENNESSEE
DEPARTMENT OF TRANSPORTATION

GENERAL NOTES

27-JAN-2014 10:05
\\JU03WF01.tdot.state.tn.us\03Shared\SURVEY\DESIGN\PIN 107847.00 Cheatham Co SR 49\002E.SHT

TYPE	YEAR	PROJECT NO.	SHEET NO.
CONST.	2014	STP-49(26)	2F

TENNESSEE D.O.T.
DESIGN DIVISION
FILE NO.

GENERAL NOTES (CONTD.)

SWPPP, PERMITS, PLANS, RECORDS

(64) THE CONTRACTOR SHALL BE SOLELY RESPONSIBLE FOR AND OBTAIN ANY NECESSARY ENVIRONMENTAL PERMITS OR APPROVALS, INCLUDING BUT NOT LIMITED TO TDEC ARAP/401, USACE SECTION 404, TVA SECTION 26A, AND TDEC NPDES PERMITS, FROM FEDERAL, STATE AND/OR LOCAL AGENCIES REGARDING THE OPERATION OF ANY PROJECT-DEDICATED ASPHALT AND/OR CONCRETE PLANTS.

(65) ANY DISAGREEMENT BETWEEN THE PROJECT PLANS, THE PROJECT AS CONSTRUCTED, AND THE PERMIT(S) ISSUED FOR THE PROJECT, SHALL BE BROUGHT TO THE ATTENTION OF THE TDOT PROJECT ENGINEER. THE ENVIRONMENTAL DIVISION, ROADWAY DESIGN DIVISION, AND HEADQUARTERS CONSTRUCTION OFFICE SHALL BE CONTACTED IN THESE INSTANCES AND DECIDE WHICH HAS PRECEDENCE AND WHETHER PERMIT OR PLANS REVISIONS ARE NEEDED. IN GENERAL, PERMIT CONDITIONS WILL PREVAIL.

(66) THE FOLLOWING INFORMATION SHALL BE MAINTAINED ON OR NEAR THE SITE: DATES THAT MAJOR GRADING ACTIVITIES OCCUR, DATES WHERE CONSTRUCTION ACTIVITIES TEMPORARILY OR PERMANENTLY CEASE ON A PORTION OF THE SITE, DATES WHEN STABILIZATION MEASURES ARE INITIATED, EPSC INSPECTION RECORDS, QUALITY ASSURANCE SITE ASSESSMENT RECORDS, PRECIPITATION RECORDS, SWPPP, PROJECT ENVIRONMENTAL PERMITS, AND A COPY OF THE PROJECT EPSC INSPECTOR'S TDEC LEVEL 1 CERTIFICATION.

(67) ALL WATER QUALITY AND STORM WATER PERMITS, INCLUDING A COPY OF THE NOC WITH NPDES PERMIT TRACKING NUMBER AND THE LOCATION OF THE SWPPP, SHALL BE POSTED NEAR THE MAIN ENTRANCE OF THE CONSTRUCTION SITE ACCESSIBLE TO THE PUBLIC. THE NAME, COMPANY NAME, EMAIL ADDRESS, TELEPHONE NUMBER AND ADDRESS OF THE PROJECT SITE OWNER, OPERATOR, OR A LOCAL CONTACT PERSON WITH A BREIF DESCRIPTION OF THE PROJECT SHALL ALSO BE POSTED. IF POSTING THIS INFORMATION NEAR A MAIN ENTRANCE IS INFEASIBLE, THE INFORMATION SHALL BE PLACED IN A PUBLICLY ACCESSIBLE LOCATION NEAR WHERE THE CONSTRUCTION IS ACTIVELY UNDERWAY AND MOVED AS NECESSARY. THIS LOCATION SHALL BE POSTED AT THE CONSTRUCTION SITE. ALL POSTINGS SHALL BE MAINTAINED IN LEGIBLE CONDITION.

(68) IF A CHANGE IN PROJECT SCOPE OCCURS DURING CONSTRUCTION, INCLUDING VALUE ENGINEERING, THE ENVIRONMENTAL DIVISION SHALL BE CONTACTED TO DETERMINE WHETHER PERMIT REVISIONS OR MODIFICATIONS OF THE SWPPP ARE NEEDED. THE ROOADWAY DESIGN DIVISION SHALL BE CONTACTED TO DETERMINE IF ANY PLAN REVISIONS ARE NEEDED.

(69) THE SWPPP SHALL BE UPDATED BY CONSTRUCTION WHENEVER EPSC INSPECTIONS INDICATE, OR WHERE STATE OR FEDERAL OFFICIALS DETERMINE EPSC MEASURES ARE PROVING INEFFECTIVE IN ELIMINATING OR SIGNIFICANTLY MINIMIZING POLLUTANT SOURCES OR ARE OTHERWISE NOT ACHIEVING THE GENERAL OBJECTIVES OF CONTROLLING POLLUTANTS IN STORM WATER DISCHARGES ASSOCIATED WITH THE CONSTRUCTION ACTIVITY. THE ENVIRONMENTAL DIVISION SHALL BE CONTACTED WHEN MAJOR DESIGN REVISIONS ARE REQUESTED BY CONSTRUCTION. THE ENVIRONMENTAL DIVISION MAY BE CONTACTED FOR GUIDANCE ON SPECIFIC SWPPP NEEDS. A COPY OF ANY CORRESPONDENCE REGARDING THE EFFECTIVENESS OF THE SWPPP OR EPSC CONTROLS SHALL BE RETAINED IN THE SWPPP.

(70) THE SWPPP SHALL BE UPDATED BY CONSTRUCTION WHENEVER A CHANGE IN CHEMICAL TREATMENT METHODS IS MADE INCLUDING USE OF A DIFFERENT CHEMICAL, DIFFERENT DOSAGE OR APPLICATION RATE, OR A DIFFERENT AREA OF APPLICATION.

(71) IF A TMDL IS DEVELOPED FOR THE RECEIVING WATERS FOR A POLLUTANT OF CONCERN (SILTATION AND/OR HABITAT ALTERATION) THE SWPPP SHALL BE MODIFIED OR UPDATED.

(72) PROJECT INSPECTORS AND SUPERVISORS (INCLUDING TDOT STAFF, CONSULTANTS AND CONTRACTOR STAFF) RESPONSIBLE FOR THE IMPLEMENTATION AND MAINTENANCE OF EPSC PLANS SHALL SUCCESSFULLY COMPLETE THE TDEC "LEVEL 1 - FUNDAMENTALS OF EROSION PREVENTION AND SEDIMENT CONTROL FOR CONSTRUCTION SITES" COURSE AND ANY REFRESHER COURSES AS REQUIRED TO MAINTAIN CERTIFICATION. A COPY OF CERTIFICATION RECORDS FOR THE COURSES SHALL BE KEPT ON SITE AND AVAILABLE UPON REQUEST.

LITTER, DEBRIS, WASTE, PETROLEUM

(73) THE CONTRACTOR SHALL ESTABLISH AND MAINTAIN A PROACTIVE METHOD TO PREVENT LITTER, CONSTRUCTION DEBRIS, AND CONSTRUCTION WASTES FROM ENTERING WATERS OF THE STATE/U.S. THESE MATERIALS WILL BE PICKED UP AND REMOVED FROM STORMWATER EXPOSURE PRIOR TO ANTICIPATED STORM EVENTS. AFTER USE, MATERIALS USED FOR EPSC WILL BE REMOVED FROM THE SITE.

(74) THE CONTRACTOR SHALL TAKE APPROPRIATE STEPS TO ENSURE THAT PETROLEUM PRODUCTS OR OTHER CHEMICAL POLLUTANTS ARE PREVENTED FROM ENTERING WATERS OF THE STATE/U.S. ALL EQUIPMENT REFUELING, SERVICING, AND STAGING AREAS SHALL COMPLY WITH ALL LOCAL, STATE, AND FEDERAL LAWS, RULES, REGULATIONS, AND ORDINANCES, INCLUDING THOSE OF THE NATIONAL FIRE PROTECTION ASSOCIATION (NFPA). APPROPRIATE CONTAINMENT MEASURES FOR THESE AREAS SHALL BE USED. ALL SPILLS MUST BE REPORTED TO THE APPROPRIATE AGENCY, AND MEASURES SHALL BE TAKEN IMMEDIATELY TO PREVENT THE POLLUTION OF WATERS OF THE STATE/U.S., INCLUDING GROUNDWATER, SHOULD A SPILL OCCUR.

SPECIAL NOTES

GRADING

(1) THE GRADING TABULATIONS AND RESULTING EARTHWORK ASSOCIATED BID QUANTITIES WERE PREPARED UTILIZING AVAILABLE GEOTECHNICAL INFORMATION AND/OR REPORTS PREPARED FOR THIS PROJECT. THIS INFORMATION IS PROVIDED FOR GENERAL INFORMATION AND ESTIMATION GUIDANCE ONLY.

(2) TO ASSIST IN BID PREPARATION FOR EARTHWORK AND FOUNDATION CONSTRUCTION, DETAIL ROCK AND SOIL DESCRIPTION AND ON SOME PROJECTS, ROCK CORE SAMPLES ARE AVAILABLE FOR INSPECTION AT THE MATERIALS AND TESTS HEADQUARTERS AT 6601 CENTENNIAL BOULEVARD, NASHVILLE, TN OR AT THE TDOT REGION 1 BUILDING IN KNOXVILLE, TN.

(3) THE CONTRACTOR SHALL UTILIZE ALL INFORMATION PROVIDED IN THE PLANS, CROSS-SECTIONS AND CONTRACT DOCUMENTS INCLUDING ANY SPECIAL PROVISIONS AS WELL AS UTILIZING HIS PAST EXPERIENCE WITH PROJECTS OF SIMILAR NATURE, SCOPE AND LOCATION IN PREPARATION OF HIS BID FOR EARTHWORK ITEMS. IT IS THE CONTRACTOR'S RESPONSIBILITY TO DETERMINE AND PROVIDE EQUIPMENT AND MEANS NECESSARY TO CONDUCT THE EXCAVATION ACTIVITIES IN ACCORDANCE WITH PLANS AND SPECIFICATIONS.

(4) EARTHWORK IS PAID FOR UNDER ITEM 203-01, ROAD AND DRAINAGE EXCAVATION (UNCLASSIFIED). NO ADDITIONAL PAYMENT WILL BE MADE FOR EARTHWORK QUANTITIES BASED SOLELY ON A CLAIM THAT THE QUANTITIES SHOWN IN THE GRADING TABULATION OR ELSEWHERE IN THE PLANS ARE INACCURATE WITH RESPECT TO THE TYPE OF MATERIALS ENCOUNTERED DURING CONSTRUCTION EXCEPT AS PROVIDED FOR BY SECTION 104.02 IN THE CURRENT EDITION OF THE STANDARD SPECIFICATIONS FOR ROAD AND BRIDGE CONSTRUCTION OR AS AMENDED IN SUPPLEMENTAL SPECIFICATIONS.

SIGNALIZATION

(5) THE DESIGN OF TRAFFIC SIGNAL SUPPORT POLES, MAST ARMS, STRAIN POLES, ETC. SHALL BE IN CONFORMANCE WITH THE AASHTO STANDARD SPECIFICATIONS FOR STRUCTURAL SUPPORTS FOR HIGHWAY SIGNS, LUMINAIRES AND TRAFFIC SIGNALS, CURRENT EDITION. OVERHEAD CANTILEVERED TRAFFIC SIGNAL STRUCTURES SHALL BE DESIGNED FOR FATIGUE CATEGORY 1.

EROSION PREVENTION AND SEDIMENT CONTROL

NPDES

(6) REFER TO THE EROSION PREVENTION AND SEDIMENT CONTROL PLAN, SHEET NO. 11, FOR NOTES REGARDING SEASONAL WORK LIMITATION OR LIMITATION ON THE TOTAL AREA OF EXPOSED SOIL.

UNOFFICIAL SET

NOT FOR BIDDING

SEALED BY

STATE OF TENNESSEE
DEPARTMENT OF TRANSPORTATION

GENERAL NOTES AND SPECIAL NOTES

27-JAN-2014 10:06
\\JU03WF01.tdot.state.tn.us\03Shared\SURVEY\DESIGN\PIN 107847.00 Cheatham Co SR 49\002F.SHT

TYPE	YEAR	PROJECT NO.	SHEET NO.
CONST.	2014	STP-49(26)	2G

TENNESSEE D.O.T.
DESIGN DIVISION
FILE NO.

MANHOLES, JUNCTION BOXES AND CATCH BASINS

SHEET NO.	LOCATION	STATION	OFFSET (FT.)	DRAINAGE CODE	GRATE/TOP ELEV.	STRUCTURE TYPE	INSIDE DIMENSIONS	DEPTH (FT.)	STANDARD DRAWING	STRUCTOR		CATCH BASIN				
										MH 611-01.02 4' - 8'	JB 611-02.10 TYPE 1	TYPE 12 611-12.01 0' - 4'	TYPE 12 611-12.02 4' - 8'	TYPE 14 611-14.02 4' - 8'	TYPE 14 611-14.03 8' - 12'	TYPE 42 611-42.01 0' - 4'
4A	S.R. 49	11+25	24' LT.	1	644.72	12 C.B.	32"X32"	3.40	D-CB-12LP			1				
5A	O.C.P.	51+54	15.8' LT.	4	689.49	12 C.B.	48"X60"	4.25	D-CB-12P				1			
5A	O.C.P.	51+54	28.2' RT.	5	688.74	12 C.B.	48"X60"	4.25	D-CB-12P				1			
5A	O.C.P.	53+50	33' RT.	6	675.00	12 C.B.	48"X60"	4.25	D-CB-12P				1			
5A	O.C.P.	54+50	33' RT.	7	669.46	12 C.B.	48"X60"	4.25	D-CB-12P				1			
5A	O.C.P.	54+50	21' LT.	8	668.92	12 C.B.	48"X60"	4.25	D-CB-12P				1			
5A	O.C.P.	55+40	31.4 LT.	9	666.51	14 C.B.	48"X108"	4.25	D-CB-14P					1		
5A	O.C.P.	55+60	33' RT.	10	666.31	14 C.B.	48"X108"	4.25	D-CB-14P					1		
5A	S.R. 49	23+00	32' LT.	11	668.57	12 C.B.	48"X60"	4.25	D-CB-12P				1			
5A	S.R. 49	22+63	32' LT.	12	668.16	J.B.	48"X48"	4.25	D-JBS-1		1					
5A	S.R. 49	22+10	32' LT.	13	667.55	14 C.B.	48"X108"	4.25	D-CB-14P					1		
5A	S.R. 49	20+72	24' LT.	14	665.96	NO.3 M.H.	60"X60"	5.15	D-MH-2	1						
5A	S.R. 49	19+98	24' LT.	15	664.11	12 C.B.	48"X60"	4.75	D-CB-12P				1			
5A	S.R. 49	18+25	24' LT.	16	658.32	12 C.B.	48"X60"	4.75	D-CB-12P				1			
5A	S.R. 49	16+92	24' LT.	17	653.85	12 C.B.	48"X60"	4.75	D-CB-12P				1			
4A	S.R. 49	14+63.62	24' LT.	18	647.43	14 C.B.	48"X108"	8.22	D-CB-14P						1	
4A	S.R. 49	11+25	24' RT.	19	644.72	12 C.B.	32"X32"	3.40	D-CB-12LP			1				
5A	S.R. 49	21+80	24' RT.	20	667.37	12 C.B.	48"X60"	4.25	D-CB-12P				1			
5A	S.R. 49	19+68	32' RT.	21	662.97	12 C.B.	48"X60"	4.25	D-CB-12P				1			
5A	S.R. 49	16+92	24' RT.	22	653.85	12 C.B.	48"X60"	4.25	D-CB-12P				1			
4A	S.R. 49	14+63.62	24' RT.	23	647.43	14 C.B.	48"X108"	8.87	D-CB-14P						1	
5A	O.C.P.	58+85	21' RT	25	660.06	12 C.B.	48"X60"	4.25	D-CB-12P				1			
5A	O.C.P.	61+40	14.9' RT	26	648.58	12 C.B.	32"X32"	3.40	D-CB-12LP			1				
5A	O.C.P.	58+85	33' LT	28	660.27	12 C.B.	48"X60"	4.25	D-CB-12P				1			
5A	O.C.P.	61+19.7	26' LT	29	649.70	42 C.B.	32"X32"	2.95	D-CB-42S							1
5A	O.C.P.	61+19.7	15.8' LT	30	650.37	12 C.B.	48"X60"	4.25	D-CB-12P				1			
5A	S.R. 49	25+32	24' LT.	32	670.87	12 C.B.	48"X60"	4.25	D-CB-12P				1			
6A	S.R. 49	28+76.8	24' LT.	33	673.60	14 C.B.	96" DIA.	10.37	D-CB-14RB						1	
5A	S.R. 49	25+32	24' RT.	35	670.87	12 C.B.	48"X60"	4.25	D-CB-12P				1			
6A	S.R. 49	28+76.8	24' RT.	36	673.60	14 C.B.	96" DIA.	11.78	D-CB-14RB						1	
TOTALS										**1**	**1**	**3**	**17**	**3**	**4**	**1**

STORM DRAINAGE ENDWALLS

SHEET NO.	LOCATION	STATION	OFFSET (FT.)	DRAINAGE CODE	STRUCTURE TYPE	STANDARD DRAWINGS	18 IN. ENDWALL 3:1 611-07.54 (EA.)	36 IN. ENDWALL 3:1 611-07.63 (EA.)	48 IN. ENDWALL 3:1 611-07.69 (EA.)
4A	S.R. 49	14+63.62	47' LT	2	"U"	D-PE-36A & B		1	
4A	S.R. 49	14+63.62	51' RT	23	"U"	D-PE-36A & B		1	
5A	O.C.P.	50+60.00	28' LT	5	"U"	D-PE-18A & B	1		
5A	O.C.P.	62+25.00	14' RT.	26	"U"	D-PE-18A & B	1		
5A	O.C.P.	62+25.00	18' LT	30	"U"	D-PE-18A & B	1		
6A	S.R. 49	28+76.80	40' LT	32	"U"	D-PE-48A & B			1
6A	S.R. 49	28+76.80	59' RT	36	"U"	D-PE-48A & B			1
TOTALS							**3**	**2**	**2**

REMOVAL OF BUILDINGS AND OBSTRUCTIONS DESCRIPTION BLOCK

PAY ITEM	TRACT NO.	DESCRIPTION	QUANTITY
202-06.01	19	TWO STORY STUCKO	1
202-06.02	20	ONE STORY FRAME	1

NO ADDITIONAL COMPENSATION WILL BE MADE FOR THESE REMOVALS.

UNOFFICIAL SET

NOT FOR BIDDING

SEALED BY

STATE OF TENNESSEE
DEPARTMENT OF TRANSPORTATION

TABULATED ROADWAY QUANTITIES

27-JAN-2014 10:07
\\JU03WF01.tdot.state.tn.us\03Shared\SURVEY\DESIGN\PIN 107847.00 Cheatham Co SR 49\0026.SHT

TYPE	YEAR	PROJECT NO.	SHEET NO.
CONST.	2014	STP-49(26)	2H

TENNESSEE D.O.T.
DESIGN DIVISION
FILE NO.

STORM DRAINAGE PIPES

SHEET NO.	FROM CODE	FROM OUTLET ELEV.	TO CODE	TO INLET ELEV.	% GRADE	REINFORCED CONC. PIPE - CLASS III SIZE & LENGTH (L.F.) 18"	24"	30"	36"	42"	48"	CLASS A-1 RIP-RAP 709-05.06 (TON)
4A	1	641.32	18	639.65	1.20	139						
4A	2	639.56	18	639.25	1.35				23			
5A	3	693.50	4	685.59	8.24	96						
5A	4	685.24	5	685.02	0.50	44						
5A	5	684.49	6	671.03	6.80	198						
5A	6	670.75	7	665.43	4.79	111						
5A	7	665.21	10	662.29	2.68	111						
5A	8	664.67	9	662.48	2.46	89						
5A	9	662.27	10	662.03	0.35	68						
5A	10	661.99	14	660.91	0.56		52					
5A	11	664.32	12	663.82	1.35	37						
5A	12	663.80	13	663.35	0.83	54						
5A	13	663.30	14	660.93	1.72	138						
5A	14	660.81	15	659.44	1.85		74					
5A	15	659.36	16	653.69	3.31		173					
5A	16	653.57	17	649.23	3.26		133					
4A, 5A	17	649.10	18	641.64	3.26		229					
4A	18	639.21	23	638.60	1.39				44			
4A	19	641.32	23	639.65	0.49	339						
5A	20	663.12	21	658.80	2.04	212						
5A	21	658.72	22	649.73	3.26	276						
4A, 5A	22	649.60	23	642.14	3.26	229						
4A	23	638.56	24	638.19	1.37				27			14
5A	25	655.81	26	645.29	4.19	251						
5A	26	645.18	27	644.00	1.40	84						8
5A	28	656.02	30	646.29	4.09	238						
5A	29	646.75	30	646.29	4.18	11						
5A	30	646.12	31	645.00	1.04	108						8
5A, 6A	32	666.62	34	663.25	2.21	345						
5A	33	667.44	34	666.10	8.38						16	
5A	34	663.23	36	661.89	3.05						44	
5A, 6A	35	666.62	36	663.25	2.21	345						
5A	36	661.82	37	660.78	3.06						34	16
TOTALS						**3523**	**661**		**94**		**94**	**46**

PAVEMENT QUANTITIES

LOCATION	PAY ITEMS 303-01 (TON)	307-01.01 (TON)	307-01.08 (TON)	402-01 (TON)	402-02 (TON)	403-01 (TON)	411-01.10 (TON)
S.R. 49	7156.0	1934.0	1267.0	17.0	68.0	8.0	743.0
OLD CLARKSVILLE PIKE	4003.0	1225.0	822.0	10.0	37.0	4.0	403.0
PRIVATE DRIVES	251.0	0.0	72.0	0.0	0.0	0.0	15.0
TRAFFIC CONTROL	1763.0	476.0	312.0	4.0	17.0	2.0	183.0
TOTALS	**13173.0**	**3635.0**	**2473.0**	**31.0**	**122.0**	**14.0**	**1344.0**

ESTIMATED GRADING QUANTITIES

STATION TO STATION	ROAD & DRAINAGE EXC. (UNCL.) COMMON - C.Y.	S. ROCK - C.Y.	BORROW EXCAVATION UNCL. - C.Y.	S. ROCK - C.Y.	CHANNEL EXC. C.Y.	EXCESS EXC. WASTE C.Y.	EMB. C.Y.
SR-49 STA. 10+00 TO STA. 31+45	8234					500	7688
OCP STA. 50+00 TO STA. 62+00	13908					13232	676
TOTALS	**22142**	**0**	**0**	**0**	**0**	**13732**	**8364**

UNOFFICIAL SET

NOT FOR BIDDING

SEALED BY

JOHN J. LANGE
REGISTERED ENGINEER
AGRICULTURE
COMMERCE
NO. 106017
STATE OF TENNESSEE

STATE OF TENNESSEE
DEPARTMENT OF TRANSPORTATION

TABULATED ROADWAY QUANTITIES

27-JAN-2014 10:08
\\J03WF01.tdot.state.tn.us\03Shared\SURVEY\DESIGN\PIN 107847.00 Cheatham Co SR 49\002H.SHT

TENNESSEE D.O.T.
DESIGN DIVISION
FILE NO.

TYPE	YEAR	PROJECT NO.	SHEET NO.
R.O.W.	2012	STP-49(26)	3
CONST.	2014	STP-49(26)	3

REV. 02-25-13: COMBINED TRACT NO. 21 WITH TRACT NO. 20 AND DELETED TRACT NO. 21. ADDED "FOR DAMAGES ONLY" TO TRACT NO. 20. REVISED TRACT NO. 29 AND NO. 30.

REV. 07-08-13: REVISED PVT. DRS. TRACT NO. 9 & 22. ADJUSTED SLOPES AND EASEMENT.

REV. 11-19-13: ADJUSTED SLOPES AND CONSTRUCTION EASEMENTS. REVISED TOTAL AREA AND AREA REMAINING AND DELETED THE CONSTRUCTION EASEMENT FOR TRACT NOS. 10 & 18.

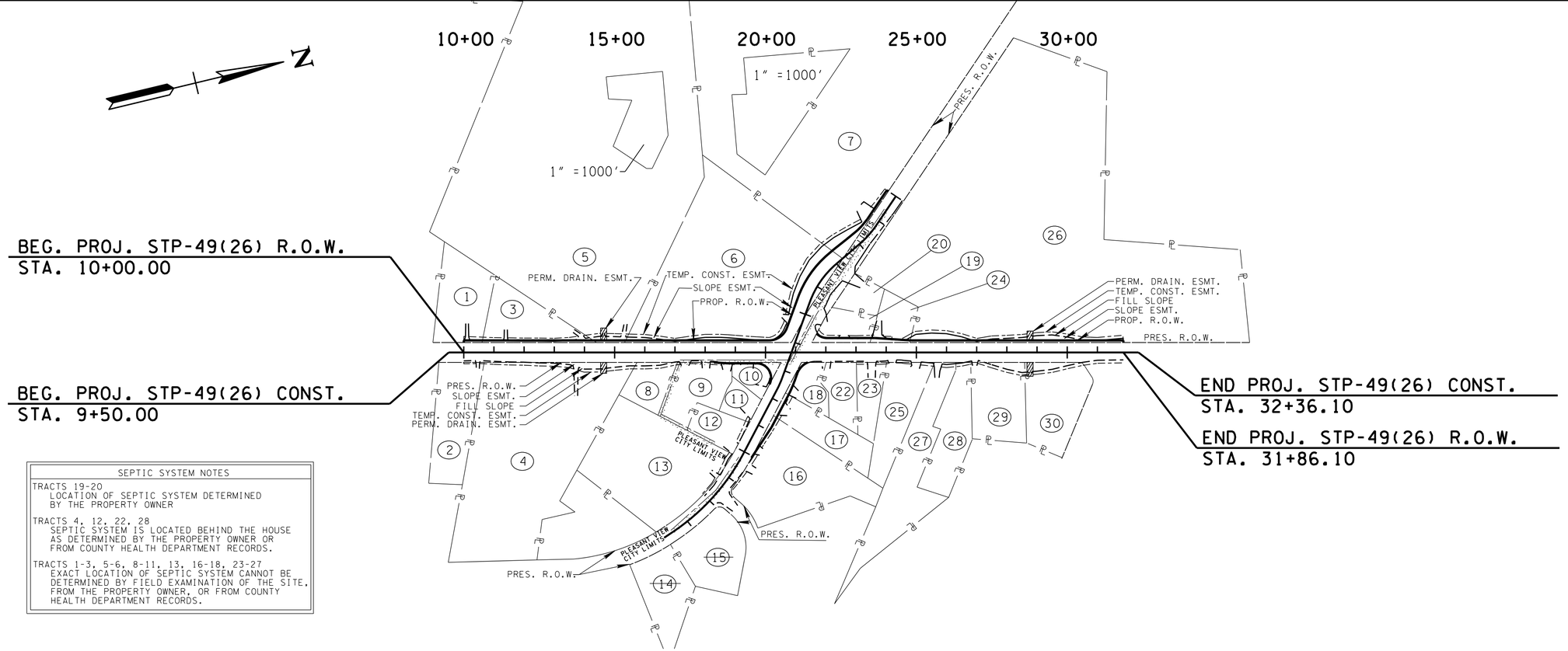

SEPTIC SYSTEM NOTES

TRACTS 19-20
LOCATION OF SEPTIC SYSTEM DETERMINED BY THE PROPERTY OWNER

TRACTS 4, 12, 22, 28
SEPTIC SYSTEM IS LOCATED BEHIND THE HOUSE AS DETERMINED BY THE PROPERTY OWNER OR FROM COUNTY HEALTH DEPARTMENT RECORDS.

TRACTS 1-3, 5-6, 8-11, 13, 16-18, 23-27
EXACT LOCATION OF SEPTIC SYSTEM CANNOT BE DETERMINED BY FIELD EXAMINATION OF THE SITE, FROM THE PROPERTY OWNER, OR FROM COUNTY HEALTH DEPARTMENT RECORDS.

R.O.W. ACQUISITION TABLE

TRACT NO.	PROPERTY OWNERS	COUNTY RECORDS				TOTAL AREA ACRES			AREA TO BE ACQUIRED ACRES			AREA REMAINING ACRES		EASEMENT (SQUARE FEET)		
		TAX MAP NO.	PARCEL NO.	DEED DOCUMENT REFERENCE BK.	DEED DOCUMENT REFERENCE PAGE	LEFT	RIGHT	TOTAL	LEFT	RIGHT	TOTAL	LEFT	RIGHT	PERM. DRAINAGE	SLOPE	CONST. *
1	R. JOE HIGGINS AND WIFE, RACHEL N. HIGGINS	26	15.01	467	344	1.25		1.250	428 S.F.		428 S.F.	1.240			103	494
2	JACKY HARRIS AND WIFE, PATRICIA HARRIS	25	6	131	23		1.216	1.216					1.216			231
3	KENDALL W. FELTS	25	1	329	659	0.900		0.900	2614 S.F.		2614 S.F.	0.840			301	2680
4	GERALD D. ELDRIDGE AND MARGARET ELDRIDGE	25	5.01	133, 171	394, 636		5.835	5.835					5.835	720	3544	4294
5	KENDALL W. FELTS AND WIFE, SANDIE L. FELTS	26	14	261	468	26.450		26.450	702 S.F.		702 S.F.	26.434		820	1053	999
6	L.B. BOYD	19	28	89, 77	464, 321	5.810		5.810	0.475		0.475	5.335			0.215 AC	0.187 AC
7	CHEATHAM COUNTY BOARD OF EDUCATION	19	28.01	253, 171	688, 472	50.680		50.680	4186 S.F.		4186 S.F.	50.584			3559	2063
8	GERALD ELDRIDGE AND WIFE, JEAN ELDRIDGE	25	2	210	341		0.500	0.500					0.500		1068	1480
9	TOMMY D. JOHNSON	20P	24.01	509	690		0.765	0.765		113 S.F.	113 S.F.		0.762			692
10	CLYDE D. BROWN	20P	23	314	154		0.281	0.281		1929 S.F.	1929 S.F.		0.237		386	
11	GARY PAUL TUCKER AND WIFE, ALICE M. TUCKER	20P	24	387	122		0.275	0.275					0.275		289	602
12	CHARLES B. BINKLEY AND WIFE, LOIS G. BINKLEY	20P	25	305	726		0.443	0.443					0.443		132	893
13	JOHN BINKLEY AND WIFE, PAM BINKLEY	25	3	368	783		3.000	3.000					3.000		186	1061
~~14~~	~~MISTY M. HOLLOWAY AND CHAD A. MCAMIS~~	~~25A~~	~~14~~	~~145~~	~~589~~		~~1.000~~	~~1.000~~					~~1.000~~			
~~15~~	~~HARRY E. WHITE~~	~~25A~~	~~13~~	~~191~~	~~680~~		~~1.090~~	~~1.090~~					~~1.090~~			
16	SIMPSON METAL CULVERT COMPANY	20P	22.01	241, 234	910, 308		2.110	2.110		1159 S.F.	1159 S.F.		2.083		113	1990
17	C&H PROPERTIES	20P	22.04	114	256		0.784	0.784		1026 S.F.	1026 S.F.		0.760		202	567
18	HOLLINGSWORTH OIL COMPANY, INC.	20P	22.06	48	909		0.370	0.370		996 S.F.	996 S.F.		0.347		284	
19	JAMES E. BROWN AND WIFE, DIANE R. BROWN	20	25.01	220	827	0.410		0.410	3076 S.F.		3076 S.F.	0.339			48	1317
20	PATRICK SEAY "FOR DAMAGES ONLY"	20	25.03&04	390	184	0.337		0.337	"FOR	DAMAGES	ONLY"	0.337		"FOR	DAMAGES	ONLY"
~~21~~	~~PATRICK SEAY~~	~~20~~	~~25.03~~	~~390~~	~~184~~	~~0.150~~		~~0.150~~				~~0.150~~				
22	KEEL IRVIN AND WIFE, TAMMY IRVIN	20P	22	21	672		0.501	0.501					0.501			367
23	KEEL IRVIN AND WIFE, TAMMY IRVIN	20P	22.05	129	389		0.460	0.460					0.460			431
24	HERBERT D. BIGGS, SR. AND WIFE, JANICE L. BIGGS	20	25.02	347	556	0.430		0.430	1505 S.F.		1505 S.F.	0.395			132	663
25	WADE KING AND MAURICE VAUGHN	20P	22.03	161	866		1.010	1.010					1.010		43	623
26	BONNIE HUNT FELTMAN	20	25	475	235	16.678		16.678	0.114		0.114	16.564		620	0.162 AC	0.157 AC
27	WAYNE BINKLEY AND WIFE, ALICE F. BINKLEY	20P	20	171	203		1.321	1.321					1.321		317	540
28	CYNTHIA FOUST	20P	21	37	155		1.000	1.000					1.000		69	456
29	CONRAD HUNTER AND WIFE, TOBI HUNTER	20P	19	281	852		1.071	1.071					1.071		2567	1622
30	LARRY L. HUNTER, JR. AND WIFE, TONYA J. HUNTER	20P	18	339	406		1.233	1.233					1.233	920	3049	1742

* FOR CONSTRUCTION OF SLOPES AND EROSION CONTROL.

UNOFFICIAL SET
NOT FOR BIDDING

SEALED BY

STATE OF TENNESSEE
DEPARTMENT OF TRANSPORTATION

PROPERTY MAP
& R.O.W. ACQUISITION TABLE
SCALE: 1"=200'

27-JAN-2014 10:08
\\JJ03WF01.tdot.state.tn.us\03Shared\SURVEY\DESIGN\PIN 107847.00 Cheatham Co SR 49\003.SHT

TYPE	YEAR	PROJECT NO.	SHEET NO.
R.O.W.	2012	STP-49(26)	3A
CONST.	2014	STP-49(26)	3A

TENNESSEE D.O.T.
DESIGN DIVISION
FILE NO.

UTILITY AND RIGHT-OF-WAY NOTES

UTILITY OWNERS

PHONE: AT&T

1820 ASHLAND CITY ROAD

CLARKSVILLE, TN. 37043

KIM BEAN

OFFICE PH. (615) 214-4871

CELL PH. (615) 214-7318

Kb1078@att.com

CABLE: CHARTER COMMUNICATIONS

1850 BUSINESS PARK DRIVE

SUITE 101

CLARKSVILLE, TN. 37040

DARREN TYRON

PH. (931) 645-8840 EXT.20150

Darrin.tyron@chartercom.com

WATER/SEWER: PLEASANT VIEW UTILITY DISRICT

P.O. BOX 129

6589 HIGHWAY 41A

PLEASANT VIEW, TN 37146

JOHN ANTHONY

PH. (615) 746-5315

jpanthony@bellsouth.net

POWER: CUMBERLAND ELECTRIC MEMBERSHIP CORPORATION

P.O. BOX 3300

1940 MADISON EXTENSION

CLARKSVILLE, TN 37043-3300

CHRIS DAVIS

PH. (931) 645-2481 EXT. 1137

cdavis@cemc.org

UTILITIES

(1) THE LOCATIONS OF UTILITIES SHOWN WITHIN THESE PLANS ARE APPROXIMATE ONLY. EXACT LOCATIONS SHALL BE DETERMINED IN THE FIELD BY CONTACTING THE UTILITY COMPANIES INVOLVED. NOTIFICATION BY CALLING THE TENNESSEE ONE CALL SYSTEM, INC., AT 1-800-351-1111 AS REQUIRED BY TCA 65-31-106 WILL BE REQUIRED.

(2) UNLESS OTHERWISE NOTED, ALL UTILITY ADJUSTMENTS WILL BE PERFORMED BY THE UTILITY OR IT'S REPRESENTATIVE. THE CONTRACTOR AND UTILITY OWNERS WILL BE REQUIRED TO COOPERATE WITH EACH OTHER IN ORDER TO EXPEDITE THE WORK REQUIRED BY THIS CONTRACT. ON CONTRACTS WHERE CONSTRUCTION STAKES, LINES, AND GRADES ARE CONTRACT ITEMS, THE CONTRACTOR WILL BE REQUIRED TO PROVIDE RIGHT-OF-WAY OR SLOPE STAKES, DITCH OR STREAM BED GRADES, OR OTHER ESSENTIAL SURVEY STAKING TO PREVENT CONFLICTS WITH THE HIGHWAY CONSTRUCTION. FREQUENTLY, THIS WILL BE REQUIRED AS THE FIRST ITEM OF WORK AND AT ANY LOCATION ON THE PROJECT DIRECTED BY THE ENGINEER.

(3) THE CONTRACTOR WILL PROVIDE ALL NECESSARY PROTECTIVE MEASURES TO SAFEGUARD EXISTING UTILITIES FROM DAMAGE DURING CONSTRUCTION OF THIS PROJECT. IN THE EVENT THAT SPECIAL EQUIPMENT IS REQUIRED TO WORK OVER AND AROUND THE UTILITIES, THE CONTRACTOR WILL BE REQUIRED TO FURNISH SUCH EQUIPMENT. THE COST OF PROTECTING UTILITIES FROM DAMAGE AND FURNISHING SPECIAL EQUIPMENT WILL BE INCLUDED IN THE PRICE BID FOR OTHER ITEMS OF CONSTRUCTION.

(4) PRIOR TO SUBMITTING HIS BID, THE CONTRACTOR WILL BE SOLELY RESPONSIBLE FOR CONTACTING OWNERS OF ALL AFFECTED UTILITIES IN ORDER TO DETERMINE THE EXTENT TO WHICH UTILITY RELOCATIONS AND/OR ADJUSTMENTS WILL HAVE UPON THE SCHEDULE OF WORK FOR THE PROJECT. WHILE SOME WORK MAY BE REQUIRED 'AROUND' UTILITY FACILITIES THAT WILL REMAIN IN PLACE, OTHER UTILITY FACILITIES MAY NEED TO BE ADJUSTED CONCURRENTLY WITH THE CONTRACTOR'S OPERATIONS. ADVANCE CLEAR CUTTING MAY BE REQUIRED BY THE ENGINEER AT ANY LOCATION WHERE CLEARING IS CALLED FOR IN THE SPECIFICATIONS AND CLEAR CUTTING IS NECESSARY FOR A UTILITY RELOCATION. ANY ADDITIONAL COST WILL BE INCLUDED IN THE UNIT PRICE BID FOR THE CLEARING ITEM SPECIFIED IN THE PLANS.

(5) THE CONTRACTOR SHALL NOTIFY EACH INDIVIDUAL UTILITY OWNER OF HIS PLAN OF OPERATION IN THE AREA OF THE UTILITIES. PRIOR TO COMMENCING WORK, THE CONTRACTOR SHALL CONTACT THE UTILITY OWNERS AND REQUEST THEM TO PROPERLY LOCATE THEIR RESPECTIVE UTILITY ON THE GROUND. THIS NOTIFICATION SHALL BE GIVEN AT LEAST THREE (3) BUSINESS DAYS PRIOR TO COMMENCEMENT OF OPERATIONS AROUND THE UTILITY IN ACCORDANCE WITH TCA 65-31-106.

RIGHT - OF – WAY

(1) IT IS INTENDED THAT ALL BUILDINGS AND/OR PORTIONS OF BUILDINGS THAT ARE WITHIN THE PROPOSED RIGHT-OF-WAY AND/OR EASEMENT LINES FOR THE PROJECT BE REMOVED THERE FROM IN THE PROCESS OF RIGHT-OF-WAY ACQUISITION. IF ANY SUCH BUILDINGS OR IMPROVEMENTS ARE NOT REMOVED IN THE COURSE OF RIGHT-OF-WAY ACQUISITION, THE CIVIL ENGINEERING MANAGER 2, ROADWAY DESIGN DIVISION AND THE CIVIL ENGINEERING MANAGER 1, REGIONAL ROADWAY DESIGN OFFICE, ARE TO BE NOTIFIED IN SUFFICIENT TIME TO PERMIT HAVING SUCH REMOVALS DESIGNATED AS A PART OF THE CONSTRUCTION CONTRACT.

(2) ALL RAMPS MUST CONFORM TO THE DEPARTMENT'S "POLICY ON FINANCING CONSTRUCTION OF PUBLIC ROAD INTERSECTIONS AND DRIVEWAYS ON HIGHWAY RESURFACING, RECONSTRUCTION AND CONSTRUCTION PROJECTS ON NEW LOCATIONS", THE MANUAL ON RULES AND REGULATIONS FOR CONSTRUCTING DRIVEWAYS ON STATE HIGHWAY RIGHT-OF-WAY, STANDARD DRAWING RP-R-1, AND OTHER ACCEPTED DESIGN AND SAFETY STANDARDS.

(3) EXISTING PAVED DRIVEWAY PER TRACT REMAINDER WILL BE REPLACED IN KIND TO A TOUCHDOWN POINT.

(4) WHERE THE EXISTING DRIVEWAY IS UNPAVED AND THE PROPOSED DRIVEWAY EXCEEDS 7 PERCENT IN GRADE, EACH DRIVEWAY WILL BE PAVED TO A TOUCHDOWN POINT OR UNTIL THE GRADE IS LESS THAN 7 PERCENT.

(5) WHERE THE EXISTING DRIVEWAY IS UNPAVED AND THE PROPOSED DRIVEWAY IS LESS THAN 7 PERCENT IN GRADE, EACH DRIVEWAY WILL BE PAVED A SHOULDER WIDTH FROM THE EDGE OF PAVEMENT AND THE REMAINDER OF THAT DRIVEWAY REPLACED IN KIND TO A TOUCHDOWN POINT.

(6) ANY NECESSARY PAVING OF DRIVEWAYS WILL BE DONE DURING PAVING OPERATIONS ON THE MAIN ROADWAY.

(7) NEW DRIVEWAYS PROVIDED IN THE PLANS WILL BE PAVED BASED ON THE 7 PERCENT CRITERIA. THOSE 7 PERCENT OR STEEPER IN GRADE WILL BE PAVED AND THOSE FLATTER THAN 7 PERCENT WILL BE COVERED WITH BASE STONE.

(8) ON PROJECTS WITH CURB AND GUTTER THAT ARE ON STATE ROUTES, IT WILL BE THE RESPONSIBILITY OF THE OWNER TO SECURE A PERMIT. AFTER THE PERMIT HAS BEEN GRANTED, THE DEPARTMENT WILL CONSTRUCT THE DRIVEWAY OR FIELD ENTRANCE THROUGH THE CURB AND SIDEWALK, PROVIDED THE CURB AND SIDEWALK HAVE NOT BEEN CONSTRUCTED. IT WILL BE THE RESPONSIBILITY OF THE PROPERTY OWNER TO CONSTRUCT THE DRIVEWAY OR FIELD ENTRANCE FROM BACK OF SIDEWALK TO TOUCHDOWN POINT FOR ANY ADDITIONAL DRIVEWAYS OR FIELD ENTRANCES OTHER THAN THOSE PROVIDED IN THE PLANS.

(10) ON NON-STATE ROUTES, ADDITIONAL DRIVEWAYS AND FIELD ENTRANCES OTHER THAN THOSE PROVIDED IN THE PLANS SHALL REQUIRE A PERMIT ONLY IF THE LOCAL AGENCY SPECIFIES THE NEED FOR THAT PERMIT.

UNOFFICIAL SET

NOT FOR BIDDING

SEALED BY

STATE OF TENNESSEE
DEPARTMENT OF TRANSPORTATION

RIGHT-OF-WAY NOTES
UTILITY NOTES & OWNERS

27-JAN-2014 10:09
\\JJ03WF01.tdot.state.tn.us\03Shared\SURVEY\DESIGN\PIN 107847.00 Cheatham Co SR 49\003A.SHT

TENNESSEE D.O.T.
DESIGN DIVISION
FILE NO.

TYPE	YEAR	PROJECT NO.	SHEET NO.
R.O.W.	2012	STP-49(26)	4
CONST.	2014	STP-49(26)	4

REV. 02-25-13: MOVED ALL R.O.W. DETAILS TO R.O.W. DETAIL SHEETS.

REV. 11-19-13: REVISED PROPERTY OWNER FOR TRACT NO. 5.

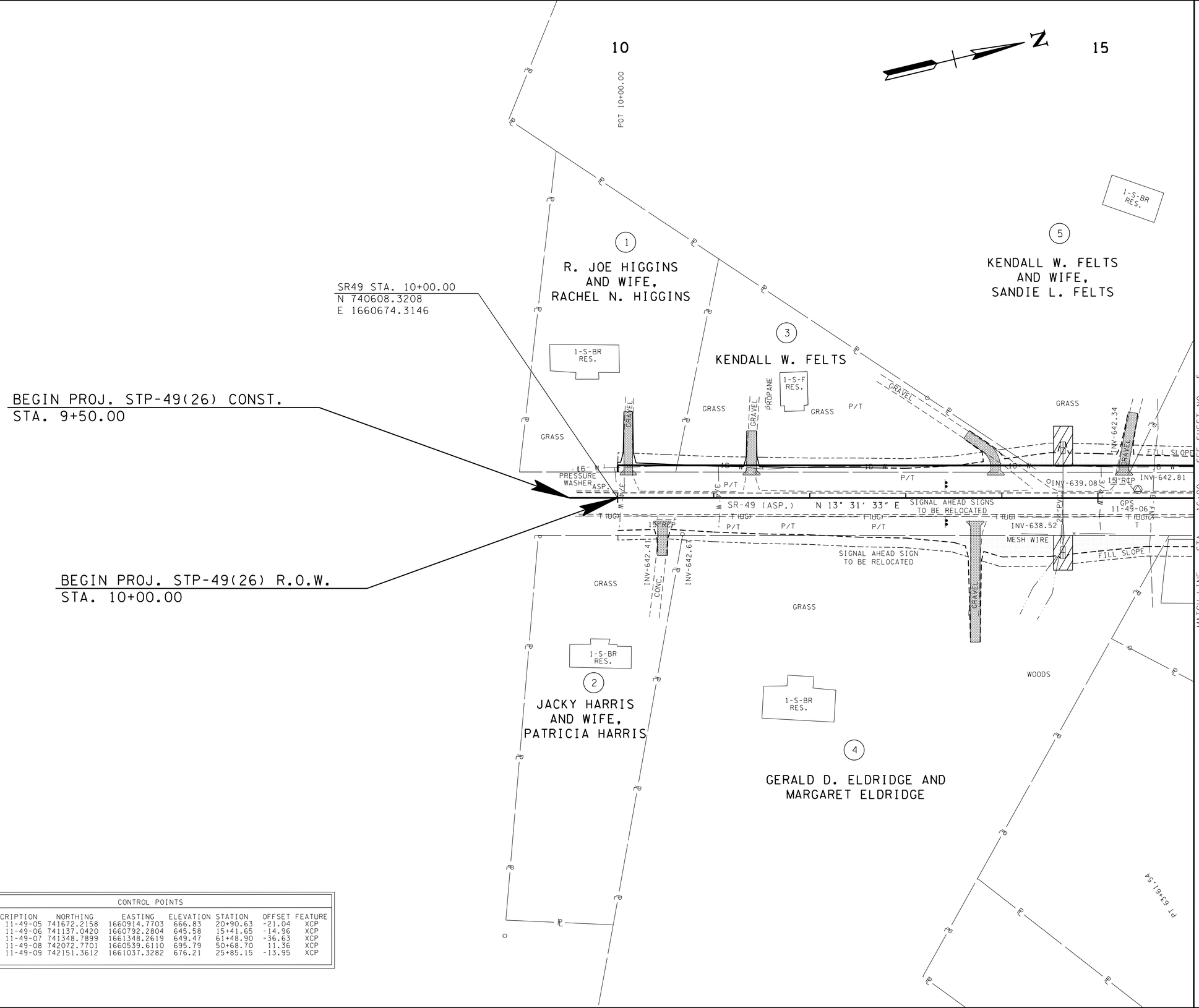

CONTROL POINTS

POINT	DESCRIPTION	NORTHING	EASTING	ELEVATION	STATION	OFFSET	FEATURE
S5	GPS 11-49-05	741672.2158	1660914.7703	666.83	20+90.63	-21.04	XCP
S6	GPS 11-49-06	741137.0420	1660792.2804	645.58	15+41.65	-14.96	XCP
S7	GPS 11-49-07	741348.7899	1661348.2619	649.47	61+48.90	-36.63	XCP
S8	GPS 11-49-08	742072.7701	1660539.6110	695.79	50+68.70	11.36	XCP
S9	GPS 11-49-09	742151.3612	1661037.3282	676.21	25+85.15	-13.95	XCP

UNOFFICIAL SET

NOT FOR BIDDING

SEALED BY

COORDINATES ARE NAD/83(1995), ARE DATUM ADJUSTED BY THE FACTOR OF 1.00004 AND TIED TO THE TGRN. ALL ELEVATIONS ARE REFERENCED TO THE NAVD 1988.

STATE OF TENNESSEE
DEPARTMENT OF TRANSPORTATION

PRESENT LAYOUT

STA. 10+00 TO STA. 16+00

SCALE: 1"=50'

27-JAN-2014 10:11
\\JJ03WF01.tdot.state.tn.us\03Shared\SURVEY\DESIGN\PIN 107847.00 Cheatham Co SR 49\004.SHT

TENNESSEE D.O.T.
DESIGN DIVISION
FILE NO.

TYPE	YEAR	PROJECT NO.	SHEET NO.
R.O.W.	2012	STP-49(26)	4A
CONST.	2014	STP-49(26)	4A

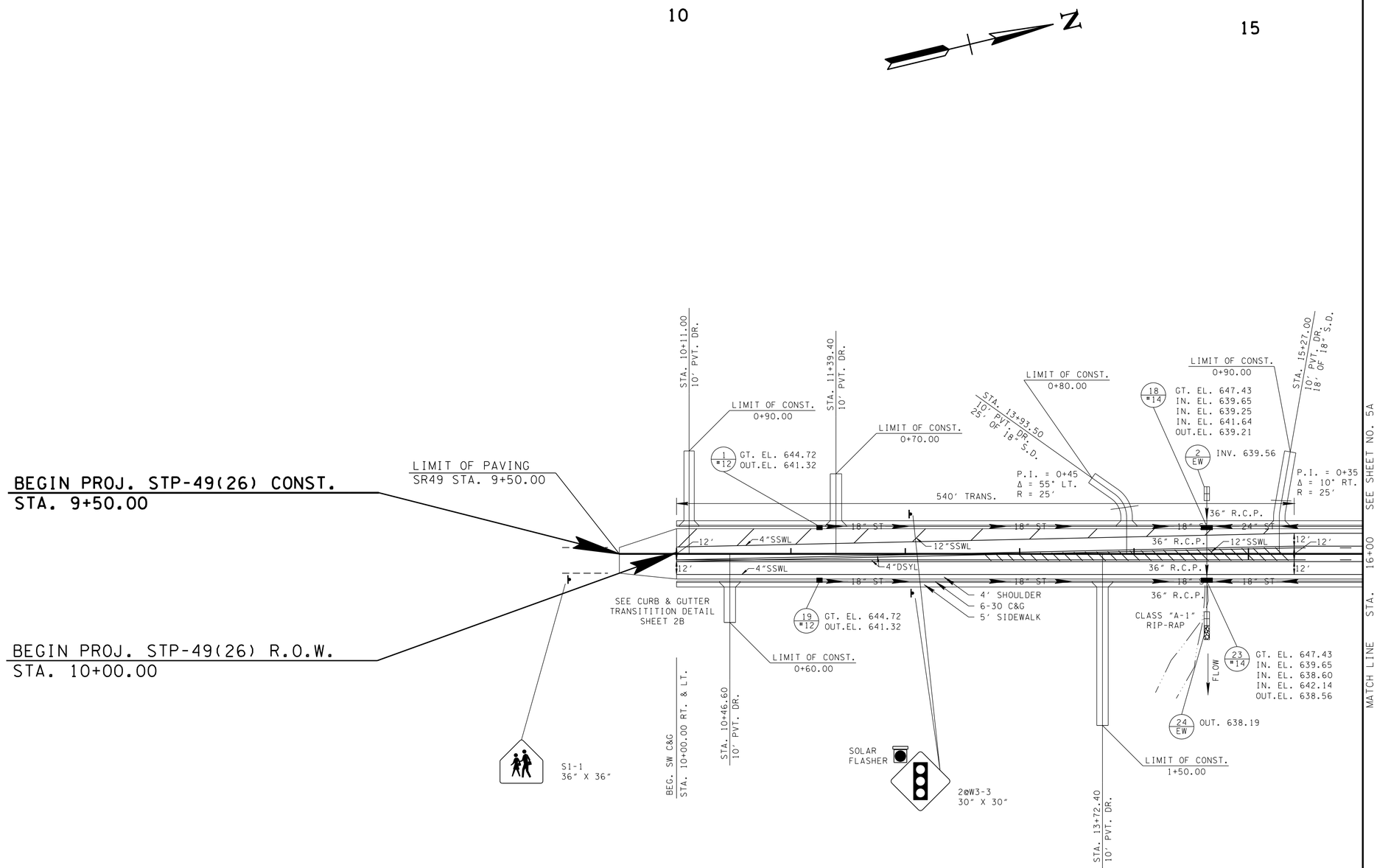

UNOFFICIAL SET

NOT FOR BIDDING

SEALED BY

STATE OF TENNESSEE
DEPARTMENT OF TRANSPORTATION

PROPOSED LAYOUT

STA. 10+00 TO STA. 16+00

SCALE: 1"=50'

27-JAN-2014 10:11
\\JJO3WF01.tdot.state.tn.us\03Shared\SURVEY\DESIGN\PIN 107847.00 Cheatham Co SR 49\004A.SHT

TENNESSEE D.O.T.
DESIGN DIVISION
FILE NO.

TYPE	YEAR	PROJECT NO.	SHEET NO.
R.O.W.	2012	STP-49(26)	4B
CONST.	2014	STP-49(26)	4B

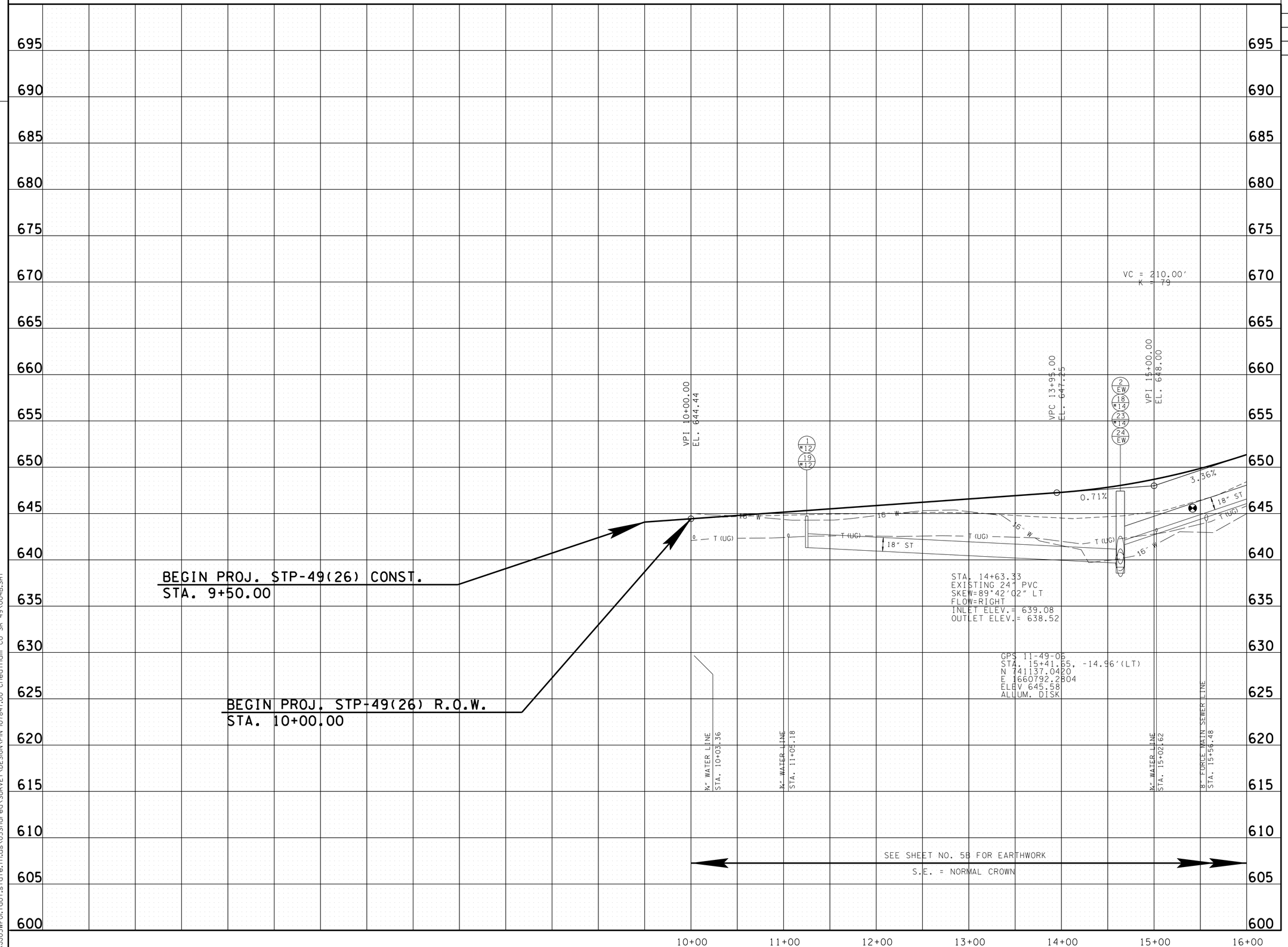

UNOFFICIAL SET

NOT FOR BIDDING

SEALED BY

JOHN L. LANCE
REGISTERED ENGINEER
AGRICULTURE
COMMERCE
NO. 106017
STATE OF TENNESSEE

STATE OF TENNESSEE
DEPARTMENT OF TRANSPORTATION

PROFILE

STA. 10+00 TO STA. 16+00
SCALE: 1"=50' HOR.
1"=5' VERT.

27-JAN-2014 10:11
\\JJ03WF01.tdot.state.tn.us\03Shared\SURVEY\DESIGN\PIN 107847.00 Cheatham Co SR 49\004B.SHT

TENNESSEE D.O.T.
DESIGN DIVISION
FILE NO.

TYPE	YEAR	PROJECT NO.	SHEET NO.
R.O.W.	2012	STP-49(26)	4C
CONST.	2014	STP-49(26)	4C

REV. 02-25-13: ADDED R.O.W. DETAILS SHEETS TO PLANS. REVISED EXISTING R.O.W. CALLS TABLE.

REV. 03-13-13: REVISED PERM. DRAIN. ESMT. TRACT NO. 4.

REV. 11-19-13: REVISED PROPERTY OWNER FOR TRACT NO. 5.

EXISTING R.O.W. CALLS

FLAG	STATION	OFFSET
1	10+00.00	27.00'
2	10+00.00	39.00'
3	10+60.46	27.00'
4	10+67.58	39.00'
5	14+39.83	27.00'
6	15+33.19	27.00'
7	15+74.12	39.00'
8	17+16.51	39.00'
9	18+89.08	39.00'
10	20+51.52	39.00'
11	20+86.12	27.00'
12	21+19.27	39.00'
13	21+53.86	27.00'
14	22+01.37	39.00'
15	23+01.16	39.00'
16	23+46.55	27.00'
17	24+01.37	39.00'
18	24+78.20	27.00'
19	25+60.79	39.00'
20	26+31.13	39.00'
21	26+80.21	39.00'
22	28+58.82	39.00'
23	30+36.50	39.00'
25	31+86.10	27.00'
26	50+00.00	30.00'
27	50+00.00	30.00'
28	52+73.37	1.07'
29	52+74.71	63.67'
~~30~~	~~53+52.09~~	~~30.00'~~
31	54+38.54	74.67'
32	54+65.42	8.76'
33	54+48.34	66.99'
34	54+90.18	4.04'
35	54+98.18	63.50'
36	57+63.82	30.00'
37	58+20.83	30.00'
38	58+48.91	30.00'
39	59+05.74	30.00'
40	60+04.63	30.00'
41	60+04.63	30.00'
42	60+25.80	30.00'
43	61+21.06	30.00'
44	61+41.29	55.62'
45	61+87.61	53.85'
46	62+07.35	30.00'
47	63+61.54	30.00'
48	63+61.54	30.00'
49	63+89.64	30.00'
50	63+94.56	30.00'
51	63+94.56	30.00'

FLAG	BEARING	DISTANCE
A	N 13°31'33" E	60.46'
B	N 13°31'33" E	67.58'
C	N 13°31'33" E	379.37'
D	N 13°31'33" E	506.53'
E	N 13°31'33" E	93.36'
F	N 13°31'33" E	552.93'
G	N 13°31'33" E	142.39'
H	N 13°31'33" E	172.57'
I	N 13°31'33" E	162.44'
J	N 13°31'33" E	82.11'
K	N 13°31'33" E	192.69'
L	N 13°31'33" E	99.79'
M	N 13°31'33" E	100.21'
N	N 13°31'33" E	131.65'
O	N 13°31'33" E	159.42'
P	N 13°31'33" E	707.90'
Q	N 13°31'33" E	70.34'
R	N 13°31'33" E	49.08'
S	N 13°31'33" E	178.61'
T	N 13°31'33" E	177.68'
~~U~~	~~N 13°31'33" E~~	~~138.15'~~
V	N 42°31'53" W	284.37'
W	N 42°31'53" W	302.29'
X	N 42°31'53" W	186.68'
Y	N 42°31'53" W	136.25'
~~Z~~	~~N 42°31'53" W~~	~~86.45'~~
AA	N 48°48'43" W	114.55'
BB	N 48°48'43" W	85.10'
CC	N 48°48'43" W	114.35'
DD	N 48°48'43" W	139.90'
EE	N 48°48'43" W	85.09'
FF	N 48°48'43" W	84.92'
GG	N 48°48'43" W	155.72'
HH	N 48°48'43" W	98.89'
II	N 54°20'52" E	26.91'
JJ	N 54°22'02" E	28.32'
KK	N 20°12'41" W	28.10'
LL	N 20°12'41" W	33.02'
MM	N 20°12'41" W	5.84'
NN	N 42°31'53" W	32.50'

CURVE	RADIUS	LENGTH
C1	230.00'	25.21'
C2	170.00'	18.63'
C3	685.00'	20.28'
C4	745.00'	121.31'
C5	685.00'	321.66'
C6	25.00'	35.59'
C7	25.00'	35.38'
C8	745.00'	160.66'

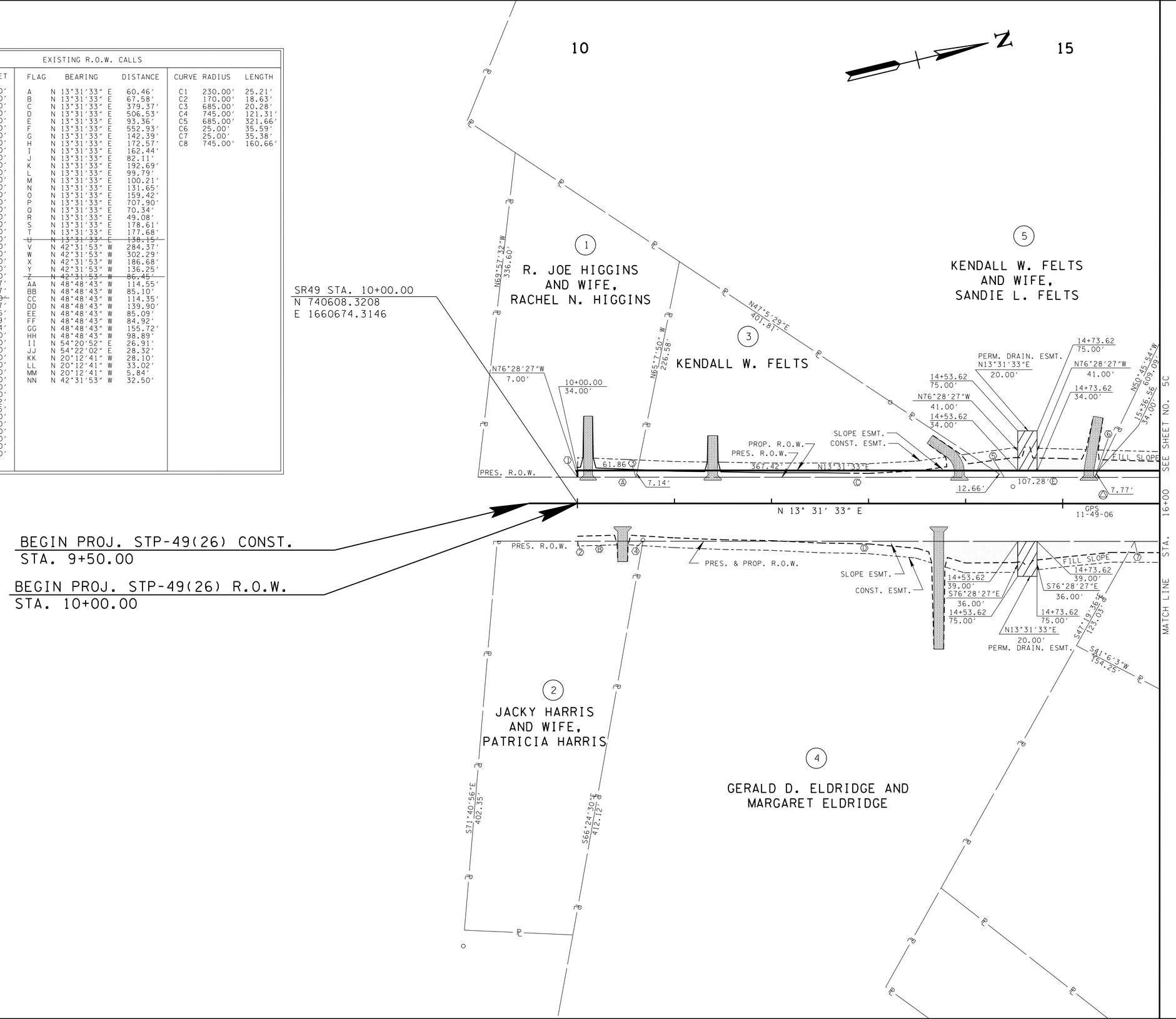

UNOFFICIAL SET

NOT FOR BIDDING

SEALED BY

COORDINATES ARE NAD/83(1995), ARE DATUM ADJUSTED BY THE FACTOR OF 1.00004 AND TIED TO THE TGRN. ALL ELEVATIONS ARE REFERENCED TO THE NAVD 1988.

STATE OF TENNESSEE
DEPARTMENT OF TRANSPORTATION

R.O.W. DETAILS

STA. 10+00 TO STA. 16+00

SCALE: 1"=50'

27-JAN-2014 10:11
\\JJ03WF01.tdot.state.tn.us\03Shared\SURVEY\DESIGN\PIN 107847.00 Cheatham Co SR 49\004C.SHT

TENNESSEE D.O.T.
DESIGN DIVISION
FILE NO.

CURVE DC1000
PI 51+57.07
N 742,004.6954
E 1,660,617.4695
Δ 15° 24′ 30″ (RT)
D 18° 58′ 20″
R 302.00
L 81.22
T 40.85
SE 0.040 FT/FT
DESIGN SPEED 30 MPH
TRANS. LENGTH 35′

CURVE DC1001
PI 53+81.10
N 741,804.8633
E 1,660,719.8307
Δ 29° 21′ 04″ (LT)
D 18° 58′ 20″
R 302.00
L 154.71
T 79.09
SE 0.040 FT/FT
DESIGN SPEED 30 MPH
TRANS. LENGTH 35′

CURVE DC1002
PI 57+45.17
N 741,601.8679
E 1,661,026.2238
Δ 7° 39′ 44″ (RT)
D 18° 58′ 20″
R 302.00
L 40.39
T 20.22
SE 0.040 FT/FT
DESIGN SPEED 30 MPH
TRANS. LENGTH 35′

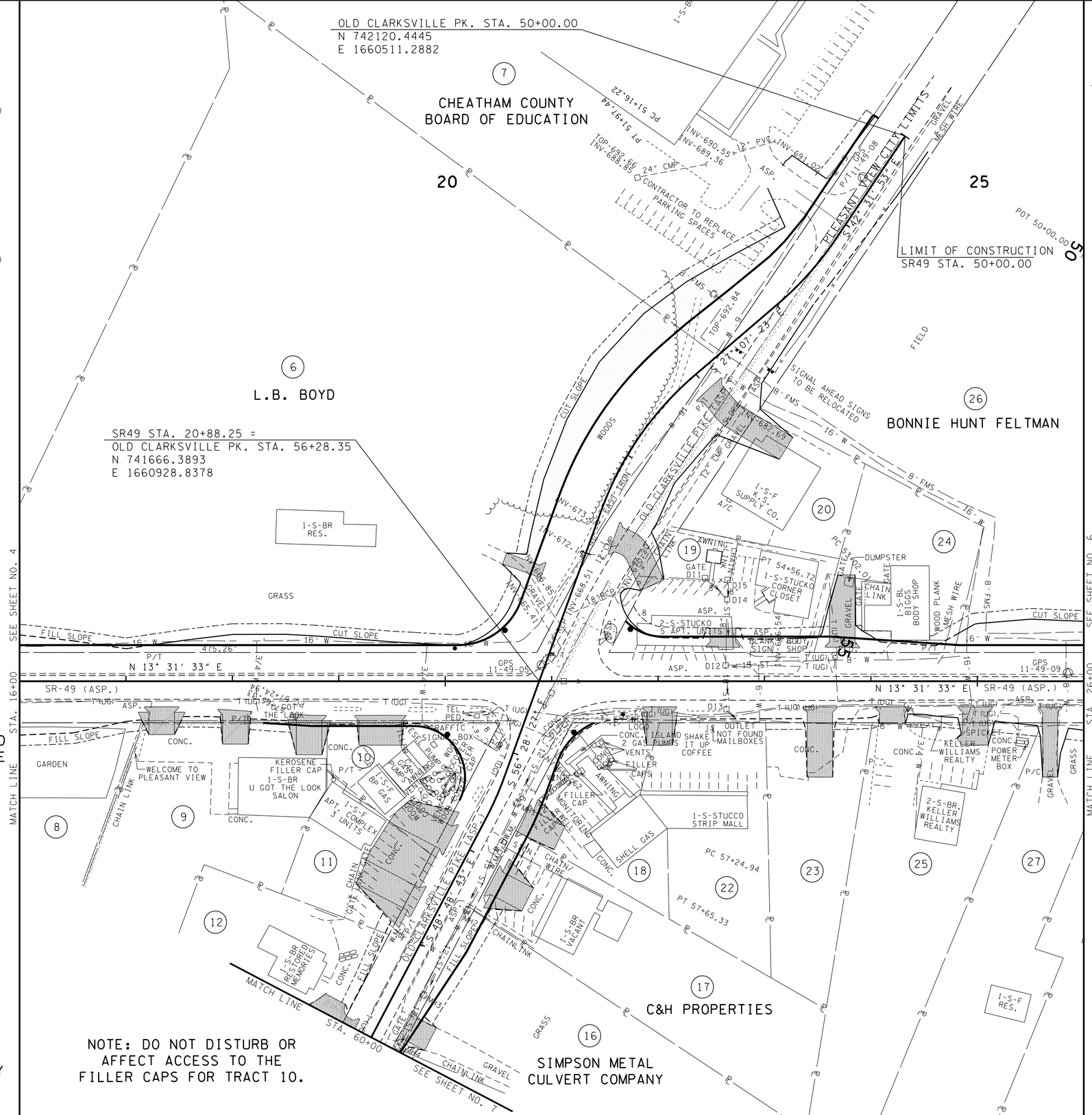

8
GERALD ELDRIDGE AND WIFE, JEAN ELDRIDGE

9
TOMMY D. JOHNSON

10
CLYDE D. BROWN

11
GARY PAUL TUCKER AND WIFE, ALICE M. TUCKER

12
CHARLES B. BINKLEY AND WIFE, LOIS G. BINKLEY

19
JAMES E. BROWN AND WIFE, DIANE R. BROWN

20
PATRICK SEAY

24
HERBERT D. BIGGS, SR. AND WIFE, JANICE L. BIGGS

27
WAYNE BINKLEY AND WIFE, ALICE F. BINKLEY

25
WADE KING AND MAURICE VAUGHN

23 & 22
KEEL IRVIN AND WIFE, TAMMY IRVIN

18
HOLLINGSWORTH OIL COMPANY, INC.

TYPE	YEAR	PROJECT NO.	SHEET NO.
R.O.W.	2012	STP-49(26)	5
CONST.	2014	STP-49(26)	5

REV. 02-25-13: MOVED ALL R.O.W. DETAILS TO R.O.W. DETAIL SHEETS. COMBINED TRACT NO. 21 WITH TRACT NO. 20. DELETED PVT. DR. STA. 52+30.

REV. 07-08-13: RELOCATED PVT. DRS. AND ADDED PVT. DR. TRACT NO. 9. DELETED PVT. DR. TRACT NO. 22. ADJUSTED SLOPES AND EASEMENT.

REV. 09-26-13: ADDED NOTE NOT TO DISTURB OR AFFECT ACCESS TO THE FILLER CAPS FOR TRACT 10.

REV. 11-19-13: REVISED PVT. DR. STA. 17+33.51, STA. 18+02.79, STA. 18+72.08, STA. 19+39.00, STA. 22+01.40, STA. 24+20.00, STA. 24+98.00, STA. 53+00.00, STA. 54+77.90, STA. 55+31.00, STA. 57+53.55, STA. 58+00.00, STA. 58+16.00, STA. 58+65.40 AND STA. 59+74.50. ADJUSTED SLOPES AND CONSTRUCTION EASEMENTS.

UNOFFICIAL SET
NOT FOR BIDDING

SEALED BY

COORDINATES ARE NAD/83(1995), ARE DATUM ADJUSTED BY THE FACTOR OF 1.0004 AND TIED TO THE TGRN. ALL ELEVATIONS ARE REFERENCED TO THE NAVD 1988.

STATE OF TENNESSEE
DEPARTMENT OF TRANSPORTATION

PRESENT LAYOUT

STA. 16+00 TO STA. 26+00
STA. 50+00 TO STA. 60+00
SCALE: 1"= 50′

27-JAN-2014 10:11
\\JJ03WF01.tdot.state.tn.us\03Shared\SURVEY\DESIGN\PIN 107847.00 Cheatham Co SR 49\005.SHT

TENNESSEE D.O.T.
DESIGN DIVISION
FILE NO.

TYPE	YEAR	PROJECT NO.	SHEET NO.
R.O.W.	2012	STP-49(26)	5A
CONST.	2014	STP-49(26)	5A

REV. 02-25-13: DELETED DRIVE STA 52+30.

REV. 07-08-13: RELOCATED PVT. DRS. STA. 17+33.51 AND 18+72.08. ADDED PVT. DR. STA. 18+02.79. DELETED PVT. DR. 22+85. ADJUSTED SLOPES AND EASEMENT.

REV. 09-26-13: ADDED NOTE NOT TO DISTURB OR AFFECT ACCESS TO THE FILLER CAPS FOR TRACT 10.

REV. 11-18-13: REVISED PVT. DR. STA. 17+33.51, STA. 18+02.79, STA. 18+72.08, STA. 19+39.00, STA. 22+01.40, STA. 24+20.00, STA. 24+98.00, STA. 53+00.00, STA. 54+77.90, STA. 55+31.00, STA. 57+53.55, STA. 58+00.00, STA. 58+16.00, STA. 58+65.40 AND STA. 59+74.50. ADDED TRAFFIC POLE LOCATIONS. REVISED TURNING MOVEMENT DATA.

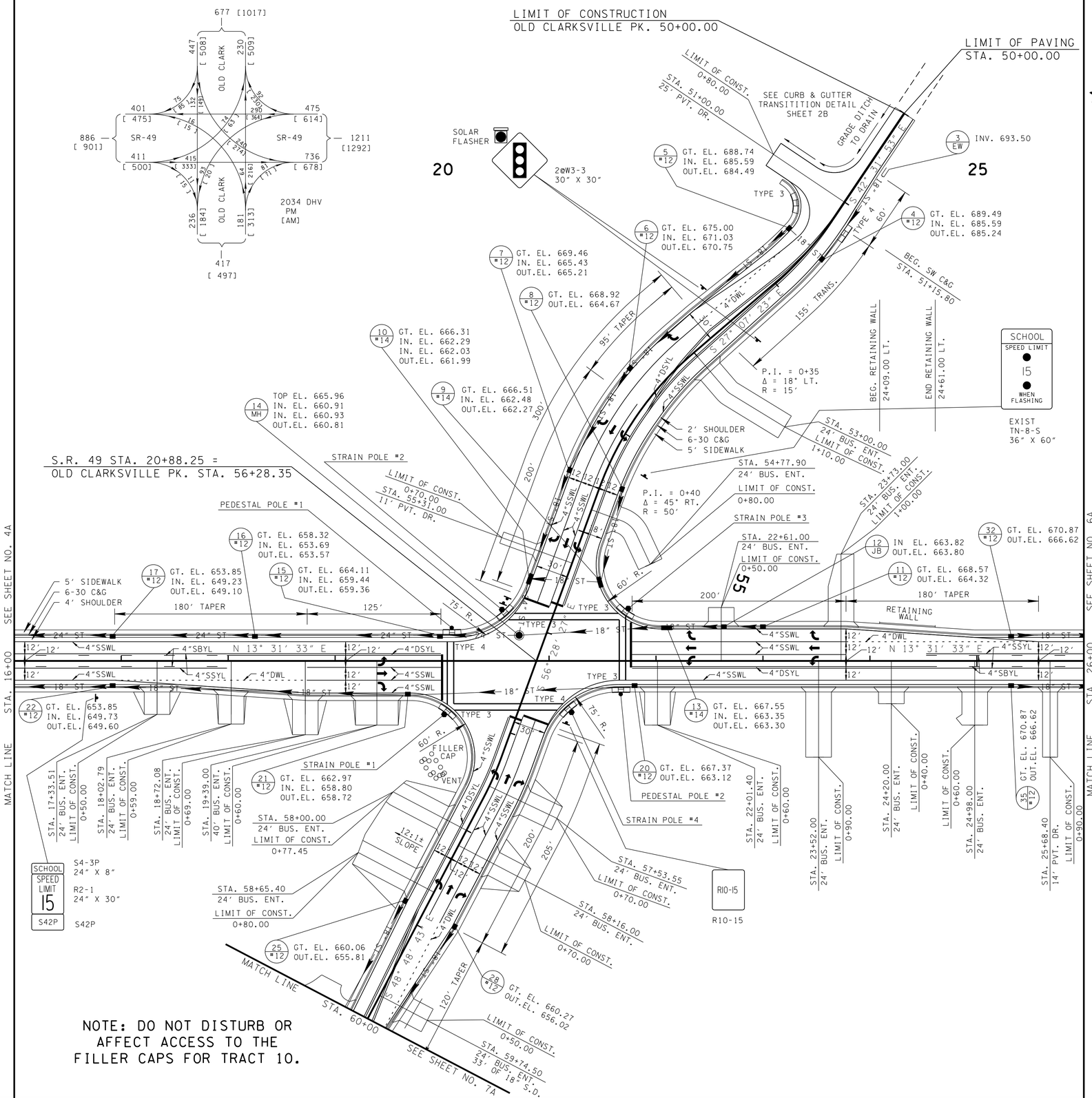

NOTE: DO NOT DISTURB OR AFFECT ACCESS TO THE FILLER CAPS FOR TRACT 10.

UNOFFICIAL SET

NOT FOR BIDDING

SEALED BY

STATE OF TENNESSEE
DEPARTMENT OF TRANSPORTATION

PROPOSED LAYOUT

STA. 10+00 TO STA. 16+00
STA. 50+00 TO STA. 60+00
SCALE: 1"=50'

27-JAN-2014 10:11
\\JJ03WF01.tdot.state.tn.us\03Shared\SURVEY\DESIGN\PIN 107847.00 Cheatham Co SR 49\005A.SHT

TENNESSEE D.O.T.
DESIGN DIVISION
FILE NO.

TYPE	YEAR	PROJECT NO.	SHEET NO.
R.O.W.	2012	STP-49(26)	5B
CONST.	2014	STP-49(26)	5B

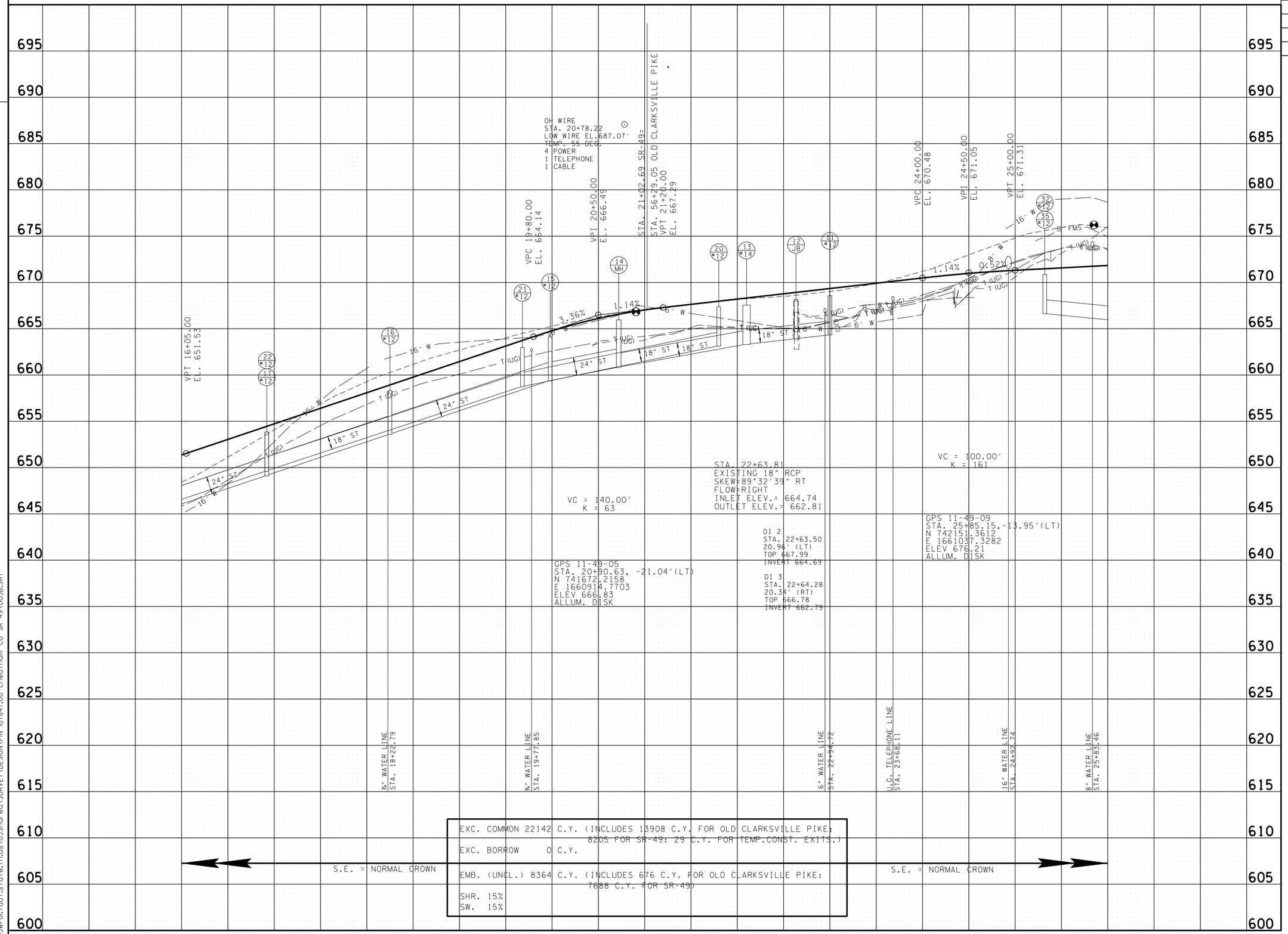

UNOFFICIAL SET

NOT FOR BIDDING

SEALED BY

LORI J. LANGE
REGISTERED ENGINEER
AGRICULTURE
COMMERCE
NO. 105011
STATE OF TENNESSEE

STATE OF TENNESSEE
DEPARTMENT OF TRANSPORTATION

PROFILE

STA. 16+00 TO STA. 26+00
SCALE: 1"=50' HOR.
1"=5' VERT.

27-JAN-2014 10:11
\\JJ03WF01.tdot.state.tn.us\03Shared\SURVEY\DESIGN\PIN 107847.00 Cheatham Co SR 49\005B.SHT

TENNESSEE D.O.T.
DESIGN DIVISION
FILE NO.

TYPE	YEAR	PROJECT NO.	SHEET NO.
R.O.W.	2012	STP-49(26)	5C
CONST.	2014	STP-49(26)	5C

REV. 02-25-13: ADDED R.O.W. DETAILS SHEETS TO PLANS.

REV. 07-08-13: REVISED PVT. DRS. TRACT NO. 9 & 22. ADJUSTED SLOPES AND EASEMENT.

REV. 09-26-13: ADDED NOTE NOT TO DISTURB OR AFFECT ACCESS TO THE FILLER CAPS FOR TRACT 10.

REV. 11-19-13: REVISED PVT. DR. STA. 17+33.51, STA. 18+02.79, STA. 18+72.08, STA. 19+39.00, STA. 22+01.40, STA. 24+20.00, STA. 24+98.00, STA. 53+00.00, STA. 54+77.90, STA. 55+31.00, STA. 57+53.55, STA. 58+00.00, STA. 58+16.00, STA. 58+65.40 AND STA. 59+74.50. ADJUSTED SLOPES AND CONSTRUCTION EASEMENTS.

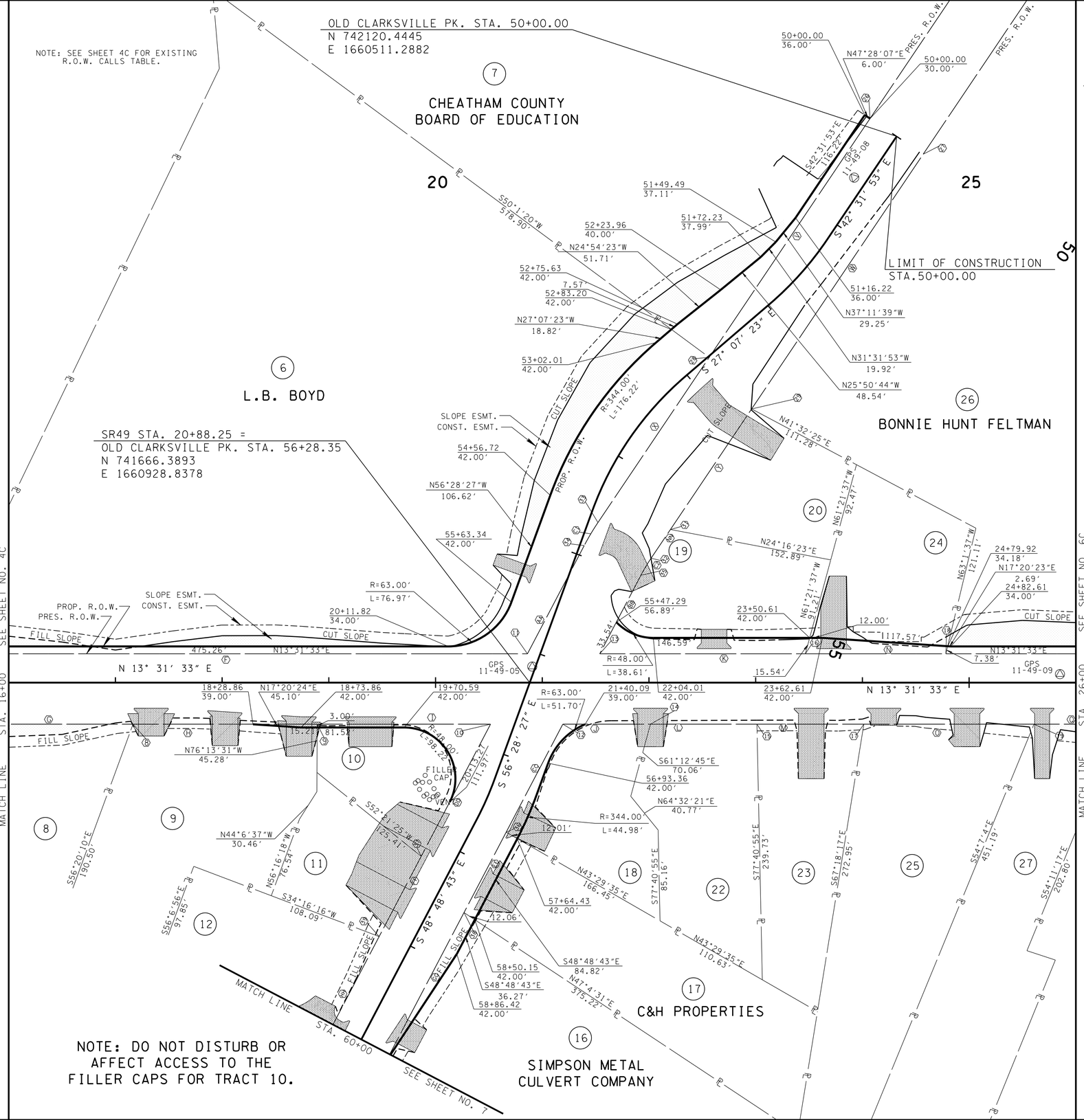

UNOFFICIAL SET

NOT FOR BIDDING

SEALED BY

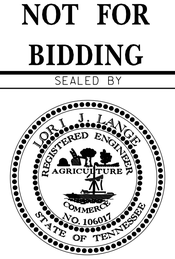

COORDINATES ARE NAD/83(1995), ARE DATUM ADJUSTED BY THE FACTOR OF 1.0004 AND TIED TO THE TGRN. ALL ELEVATIONS ARE REFERENCED TO THE NAVD 1988.

STATE OF TENNESSEE
DEPARTMENT OF TRANSPORTATION

R.O.W. DETAIL

STA. 16+00 TO STA. 26+00
STA. 50+00 TO STA. 60+00
SCALE: 1"= 50'

27-JAN-2014 10:11
\\J03WF01.tdot.state.tn.us\03Shared\SURVEY\DESIGN\PIN 107847.00 Cheatham Co SR 49\005C.SHT

TENNESSEE D.O.T.
DESIGN DIVISION
FILE NO.

TYPE	YEAR	PROJECT NO.	SHEET NO.
R.O.W.	2012	STP-49(26)	6
CONST.	2014	STP-49(26)	6

REV. 02-25-13: MOVED ALL R.O.W. DETAILS TO R.O.W. DETAIL SHEETS. REVISED TRACT NO. 29 AND TRACT NO. 30. ADDED PVT. DR. STA. 26+93.40.

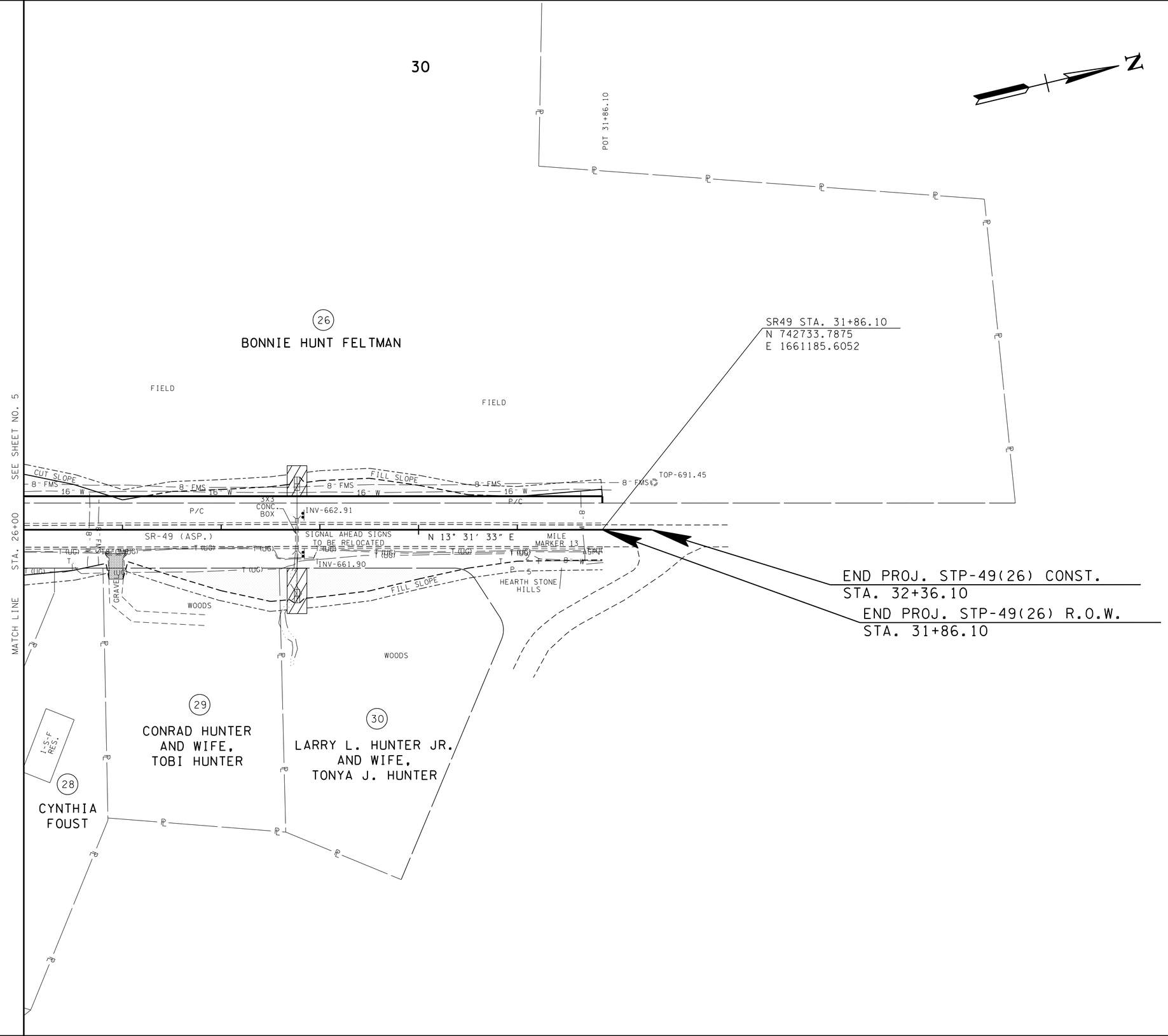

UNOFFICIAL SET

NOT FOR BIDDING

SEALED BY

COORDINATES ARE NAD/83(1995), ARE DATUM ADJUSTED BY THE FACTOR OF 1.00004 AND TIED TO THE TGRN. ALL ELEVATIONS ARE REFERENCED TO THE NAVD 1988.

STATE OF TENNESSEE
DEPARTMENT OF TRANSPORTATION

PRESENT LAYOUT

STA.26+00 TO STA.31+86.10

SCALE: 1"=50'

27-JAN-2014 10:11
\\J03WF01.tdot.state.tn.us\03Shared\SURVEY\DESIGN\PIN 107847.00 Cheatham Co SR 49\006.SHT

TENNESSEE D.O.T.
DESIGN DIVISION
FILE NO.

30

TYPE	YEAR	PROJECT NO.	SHEET NO.
R.O.W.	2012	STP-49(26)	6A
CONST.	2014	STP-49(26)	6A

REV. 02-25-13: ADDED PVT. DR. STA. 26+93.40.

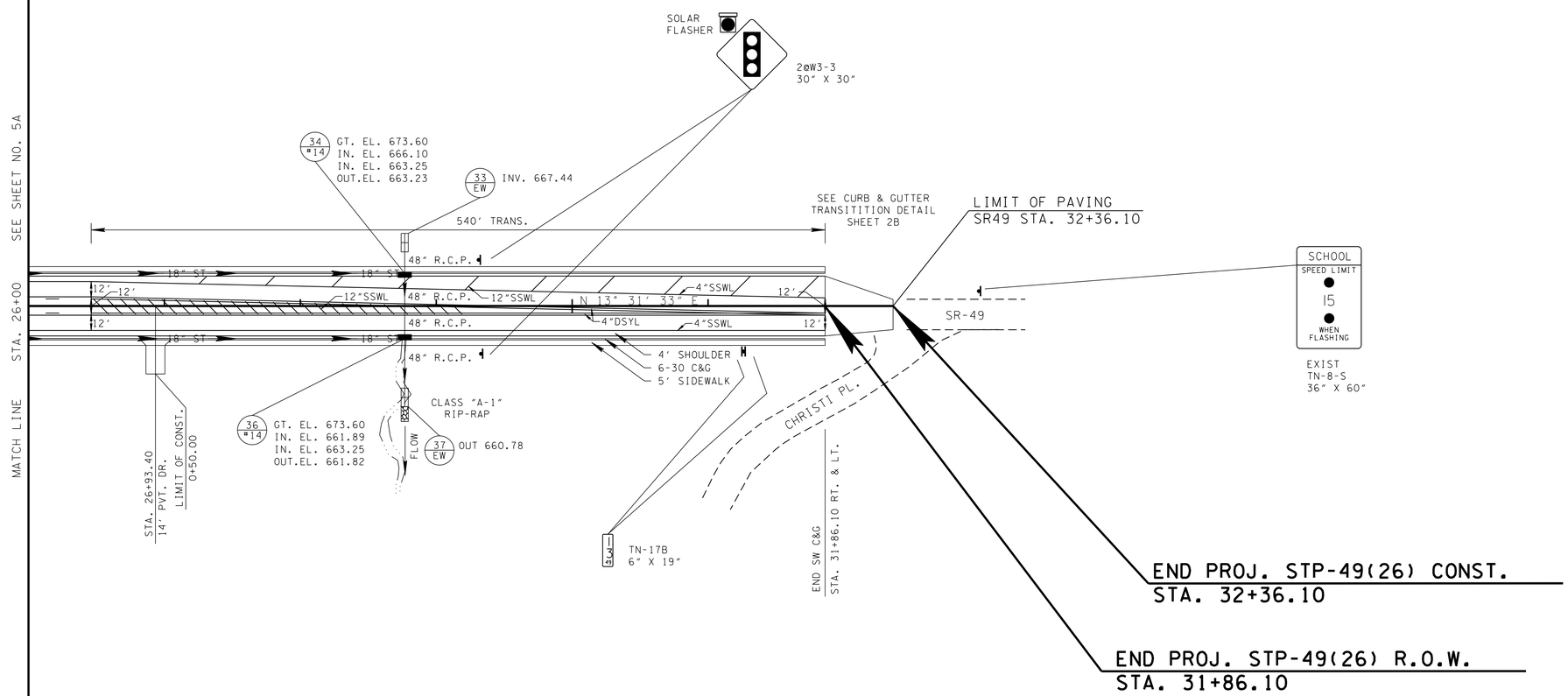

UNOFFICIAL SET

NOT FOR BIDDING

SEALED BY

STATE OF TENNESSEE
DEPARTMENT OF TRANSPORTATION

PROPOSED LAYOUT

STA.26+00 TO STA.31+86.10

SCALE: 1"=50'

27-JAN-2014 10:11
\\JJ03WF01.tdot.state.tn.us\03Shared\SURVEY\DESIGN\PIN 107847.00 Cheatham Co SR 49\006A.SHT

TENNESSEE D.O.T.
DESIGN DIVISION
FILE NO.

TYPE	YEAR	PROJECT NO.	SHEET NO.
R.O.W.	2012	STP-49(26)	6B
CONST.	2014	STP-49(26)	6B

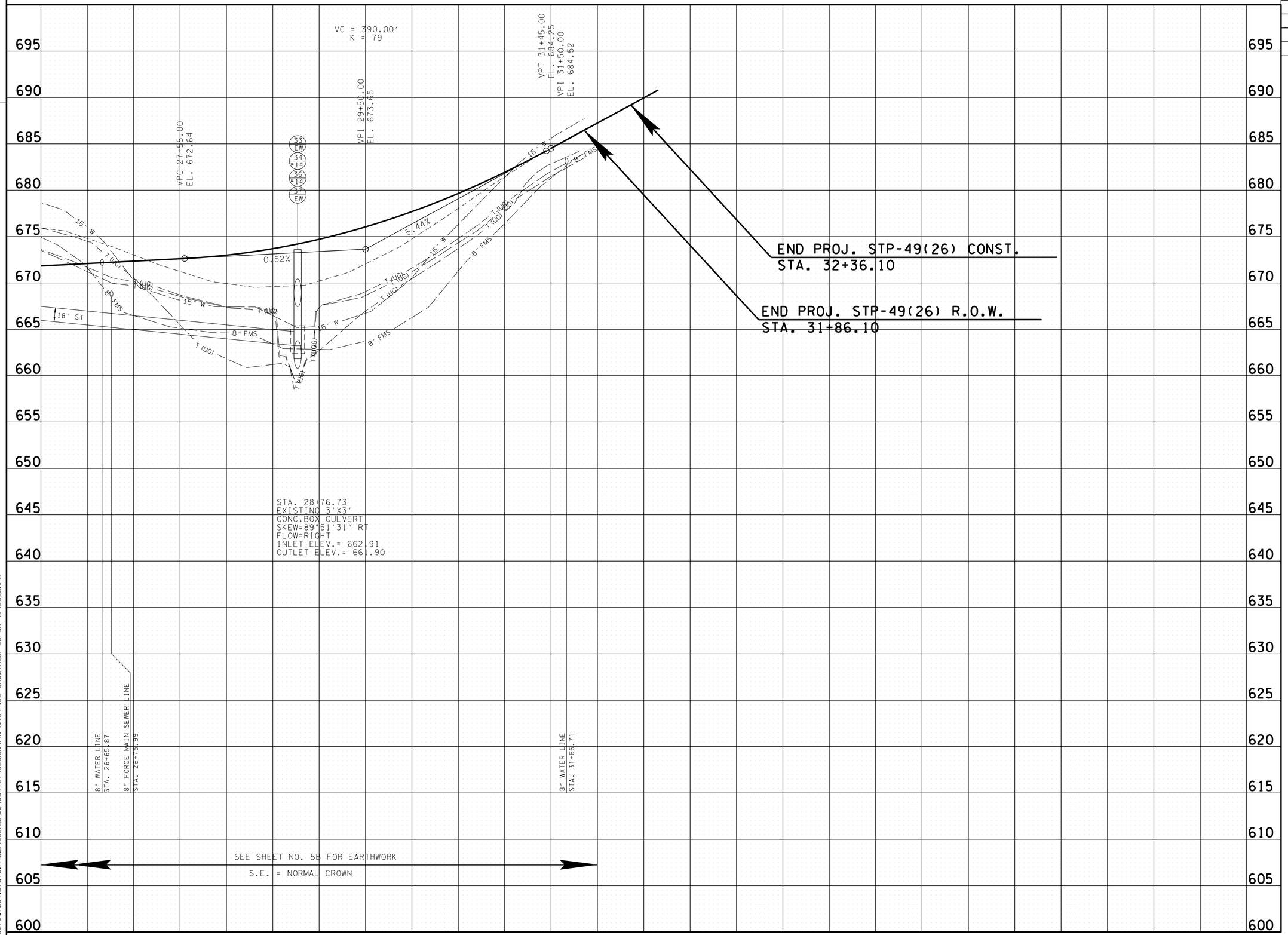

UNOFFICIAL SET

NOT FOR BIDDING

SEALED BY

LORI J. LANGE
REGISTERED ENGINEER
AGRICULTURE
COMMERCE
NO. 105011
STATE OF TENNESSEE

STATE OF TENNESSEE
DEPARTMENT OF TRANSPORTATION

PROFILE

STA. 26+00 TO STA. 31+86
SCALE: 1"=50' HOR.
1"=5' VERT.

27-JAN-2014 10:11
\\JJ03WF01.tdot.state.tn.us\03Shared\SURVEY\DESIGN\PIN 107847.00 Cheatham Co SR 49\006B.SHT

TENNESSEE D.O.T.
DESIGN DIVISION
FILE NO.

TYPE	YEAR	PROJECT NO.	SHEET NO.
R.O.W.	2012	STP-49(26)	6C
CONST.	2014	STP-49(26)	6C

REV. 02-25-13: ADDED R.O.W. DETAILS SHEETS TO PLANS.

REV. 03-13-13: REVISED PERM. DRAIN. ESMT. TRACT NO. 30.

NOTE: SEE SHEET 4C FOR EXISTING R.O.W. CALLS TABLE.

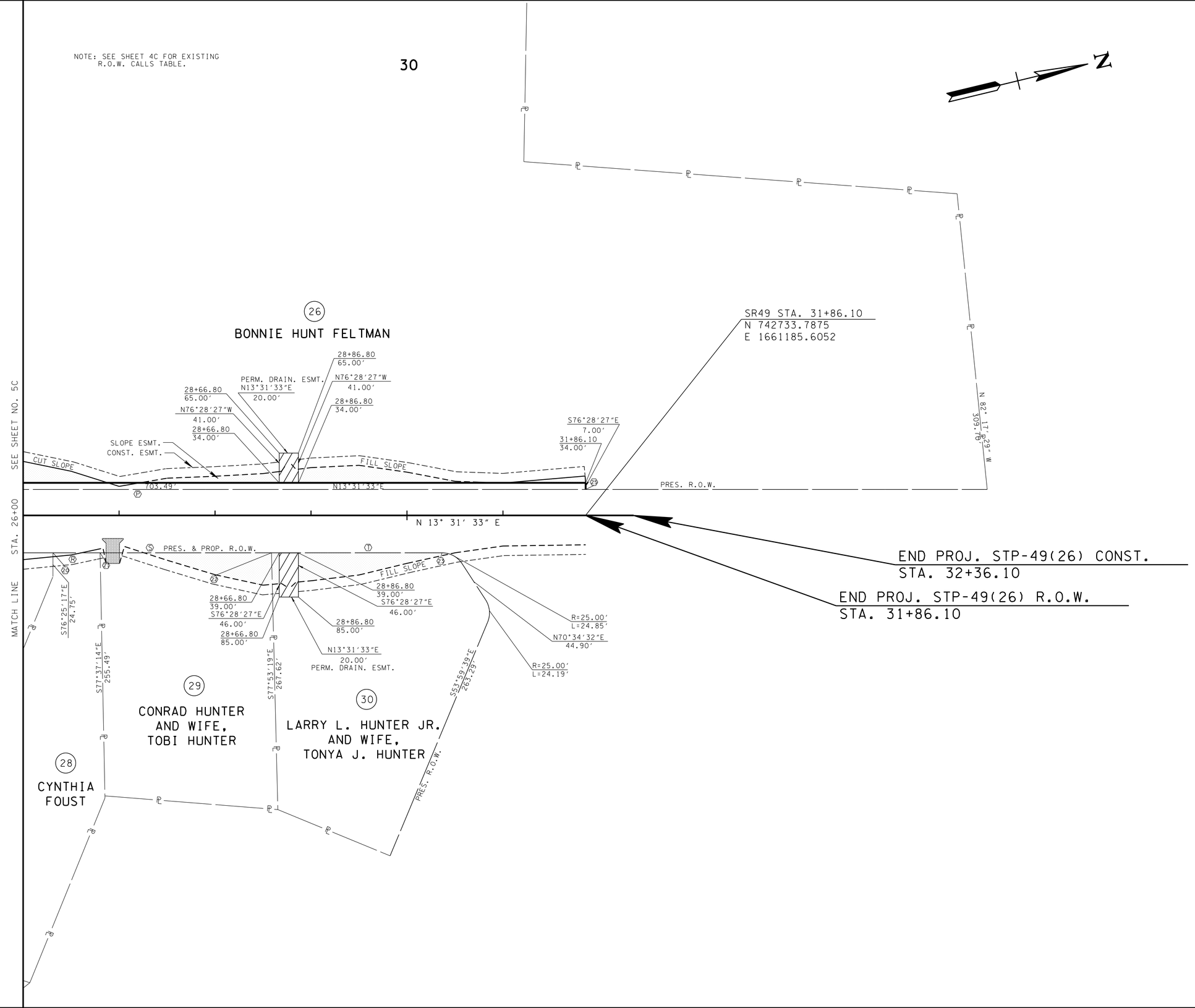

UNOFFICIAL SET

NOT FOR BIDDING

SEALED BY

COORDINATES ARE NAD/83(1995), ARE DATUM ADJUSTED BY THE FACTOR OF 1.00004 AND TIED TO THE TGRN. ALL ELEVATIONS ARE REFERENCED TO THE NAVD 1988.

STATE OF TENNESSEE
DEPARTMENT OF TRANSPORTATION

R.O.W. DETAIL

STA.26+00 TO STA.31+86.10

SCALE: 1"=50'

27-JAN-2014 10:11
\\JU03WF01.tdot.state.tn.us\03Shared\SURVEY\DESIGN\PIN 107847.00 Cheatham Co SR 49\006C.SHT

TENNESSEE D.O.T.
DESIGN DIVISION
FILE NO.

TYPE	YEAR	PROJECT NO.	SHEET NO.
R.O.W.	2012	STP-49(26)	7
CONST.	2014	STP-46(26)	7

REV. 02-25-13: MOVED ALL R.O.W. DETAILS TO R.O.W. DETAIL SHEETS.

REV. 11-19-13: REVISED PVT. DR. STA. 60+04.60, STA. 60+38.89, AND STA. 61+19.70. ADJUSTED SLOPES AND CONSTRUCTION EASEMENTS.

CURVE DC1003
PI 61+86.89
N 741,310.9413
E 1,661,358.6855
Δ 28° 36′ 02″ (RT)
D 8° 00′ 48″
R 715.00
L 356.91
T 182.25
SE 0.031 FT/FT
DESIGN SPEED 30 MPH
TRANS. LENGTH 100′

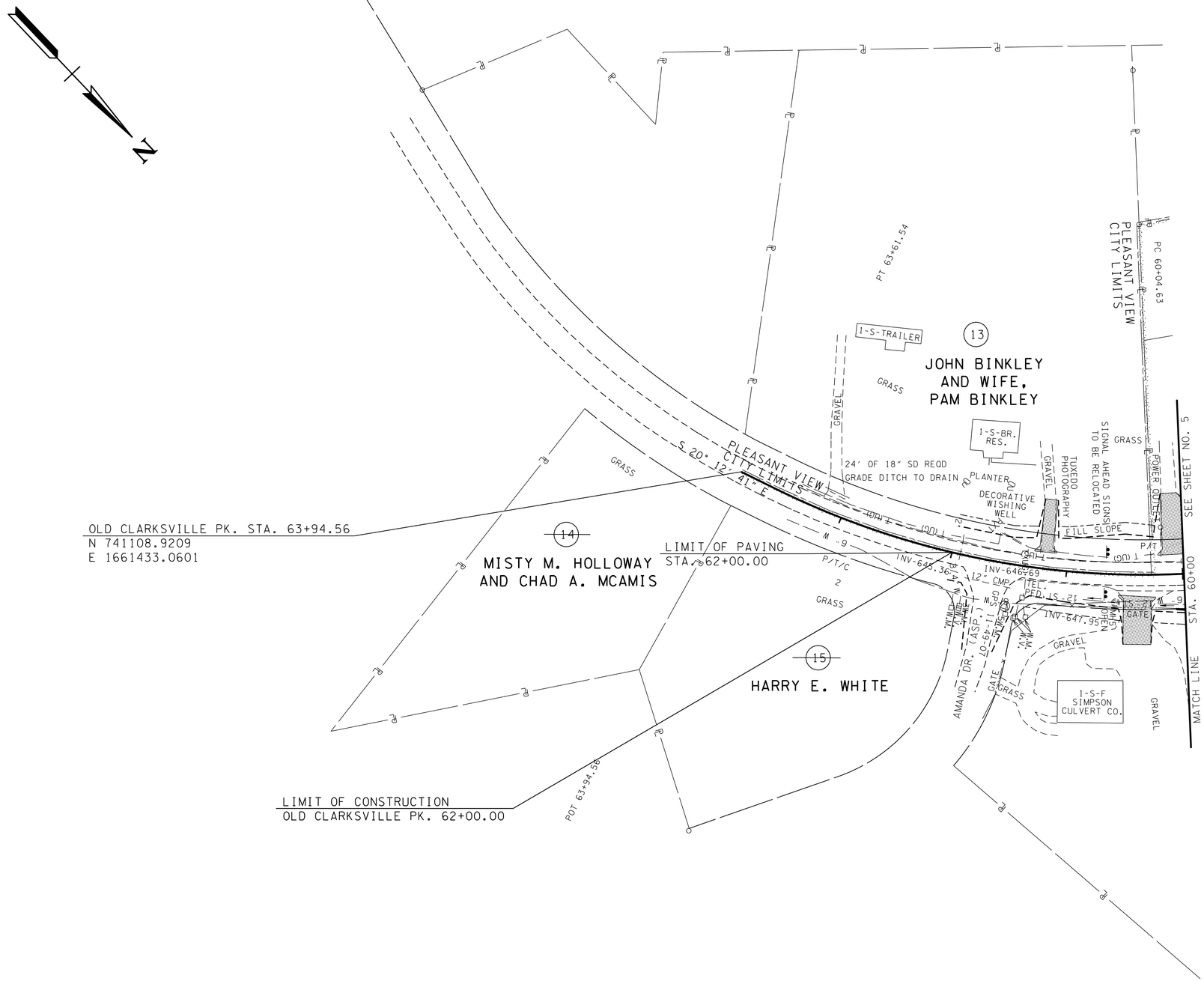

UNOFFICIAL SET

NOT FOR BIDDING

SEALED BY

JOHN I. LANCE
REGISTERED ENGINEER
AGRICULTURE
COMMERCE
NO. 106017
STATE OF TENNESSEE

COORDINATES ARE NAD/83(1995), ARE DATUM ADJUSTED BY THE FACTOR OF 1.00004 AND TIED TO THE TGRN. ALL ELEVATIONS ARE REFERENCED TO THE NAVD 1988.

STATE OF TENNESSEE
DEPARTMENT OF TRANSPORTATION

PRESENT LAYOUT

STA.60+00 TO STA.63+62.64

SCALE: 1"=50′

27-JAN-2014 10:11
\\JJ03WF01.tdot.state.tn.us\03Shared\SURVEY\DESIGN\PIN 107847.00 Cheatham Co SR 49\007.SHT

TYPE	YEAR	PROJECT NO.	SHEET NO.
R.O.W.	2012	STP-49(26)	7A
CONST.	2014	STP-49(26)	7A

REV. 11-19-13: REVISED PVT. DR. STA. 60+04.60, STA. 60+38.89, AND STA. 61+19.70.

TENNESSEE D.O.T.
DESIGN DIVISION
FILE NO.

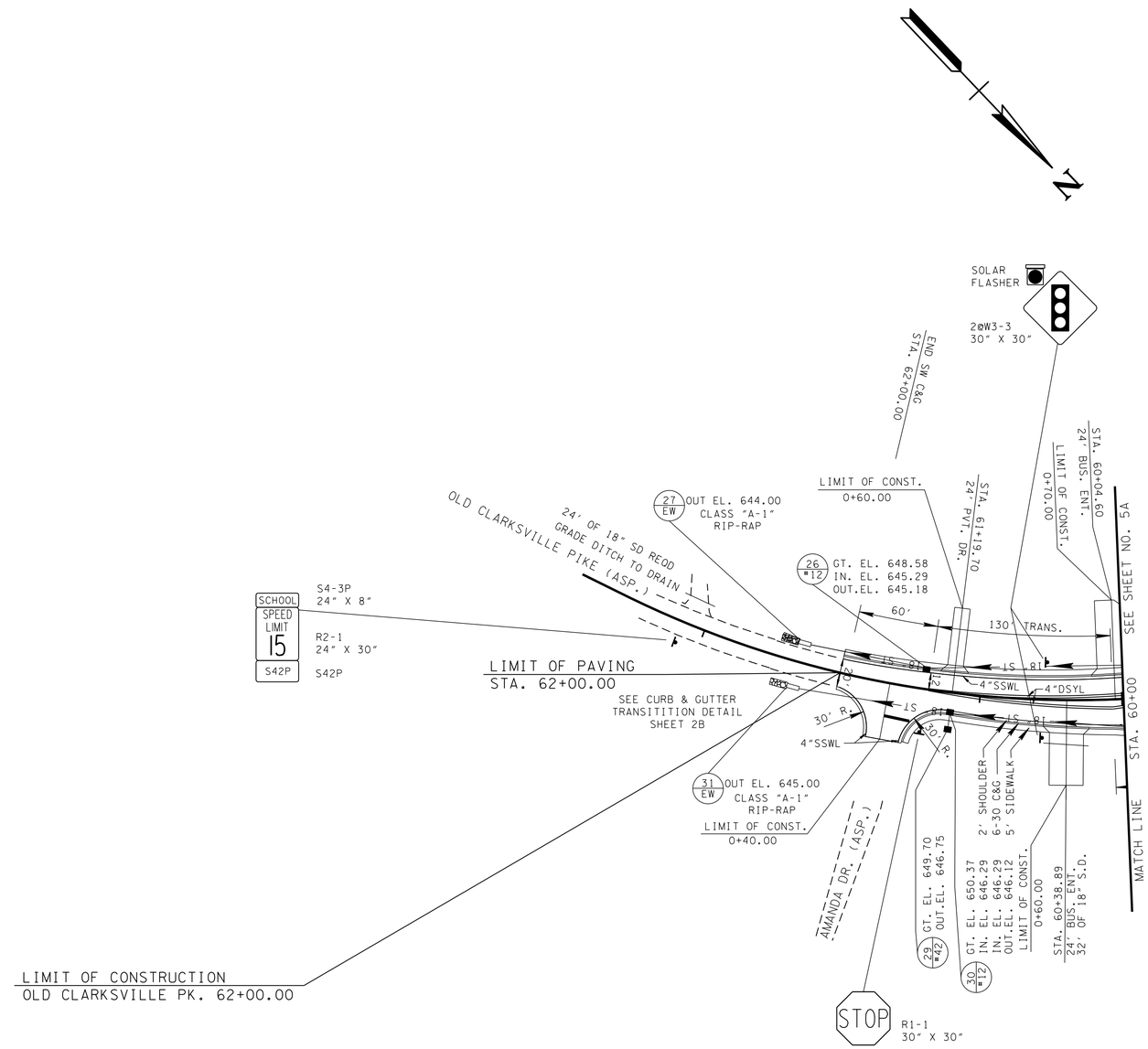

UNOFFICIAL SET

NOT FOR BIDDING

SEALED BY

STATE OF TENNESSEE
DEPARTMENT OF TRANSPORTATION

PROPOSED LAYOUT

STA.60+00 TO STA.63+62.64

SCALE: 1"=50'

27-JAN-2014 10:11
\\JJ03WF01.tdot.state.tn.us\03Shared\SURVEY\DESIGN\PIN 107847.00 Cheatham Co SR 49\007A.SHT

TENNESSEE D.O.T.
DESIGN DIVISION
FILE NO.

TYPE	YEAR	PROJECT NO.	SHEET NO.
R.O.W.	2012	STP-49(26)	7B
CONST.	2014	STP-49(26)	7B

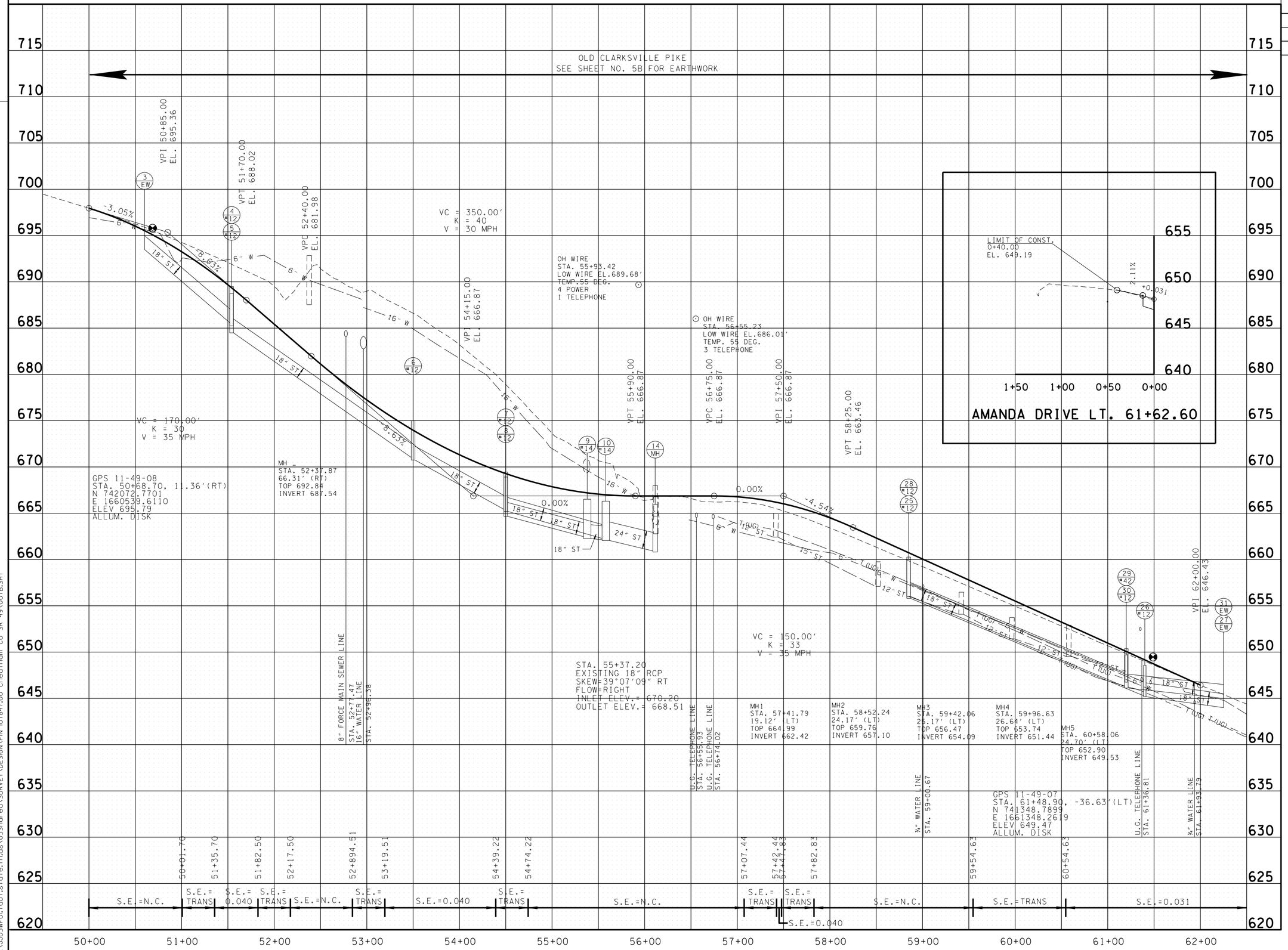

UNOFFICIAL SET

NOT FOR BIDDING

SEALED BY

LORI J. LANGE
REGISTERED ENGINEER
AGRICULTURE
COMMERCE
NO. 105017
STATE OF TENNESSEE

STATE OF TENNESSEE
DEPARTMENT OF TRANSPORTATION

PROFILE

OLD CLARKSVILLE PIKE

SCALE: 1"=50' HOR.
1"=5' VERT.

27-JAN-2014 10:11
\\JJ03WF01.tdot.state.tn.us\03Shared\SURVEY\DESIGN\PIN 107847.00 Cheatham Co SR 49\007B.SHT

TENNESSEE D.O.T.
DESIGN DIVISION
FILE NO.

TYPE	YEAR	PROJECT NO.	SHEET NO.
R.O.W.	2012	STP-49(26)	7C
CONST.	2014	STP-49(26)	7C

REV. 02-25-13: ADDED R.O.W. DETAILS SHEETS TO PLANS.

REV. 11-19-13: REVISED PVT. DR. STA. 60+04.60, STA. 60+38.89, AND STA. 61+19.70. ADJUSTED SLOPES AND CONSTRUCTION EASEMENTS.

NOTE: SEE SHEET 4C FOR EXISTING R.O.W. CALLS TABLE.

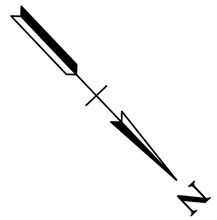

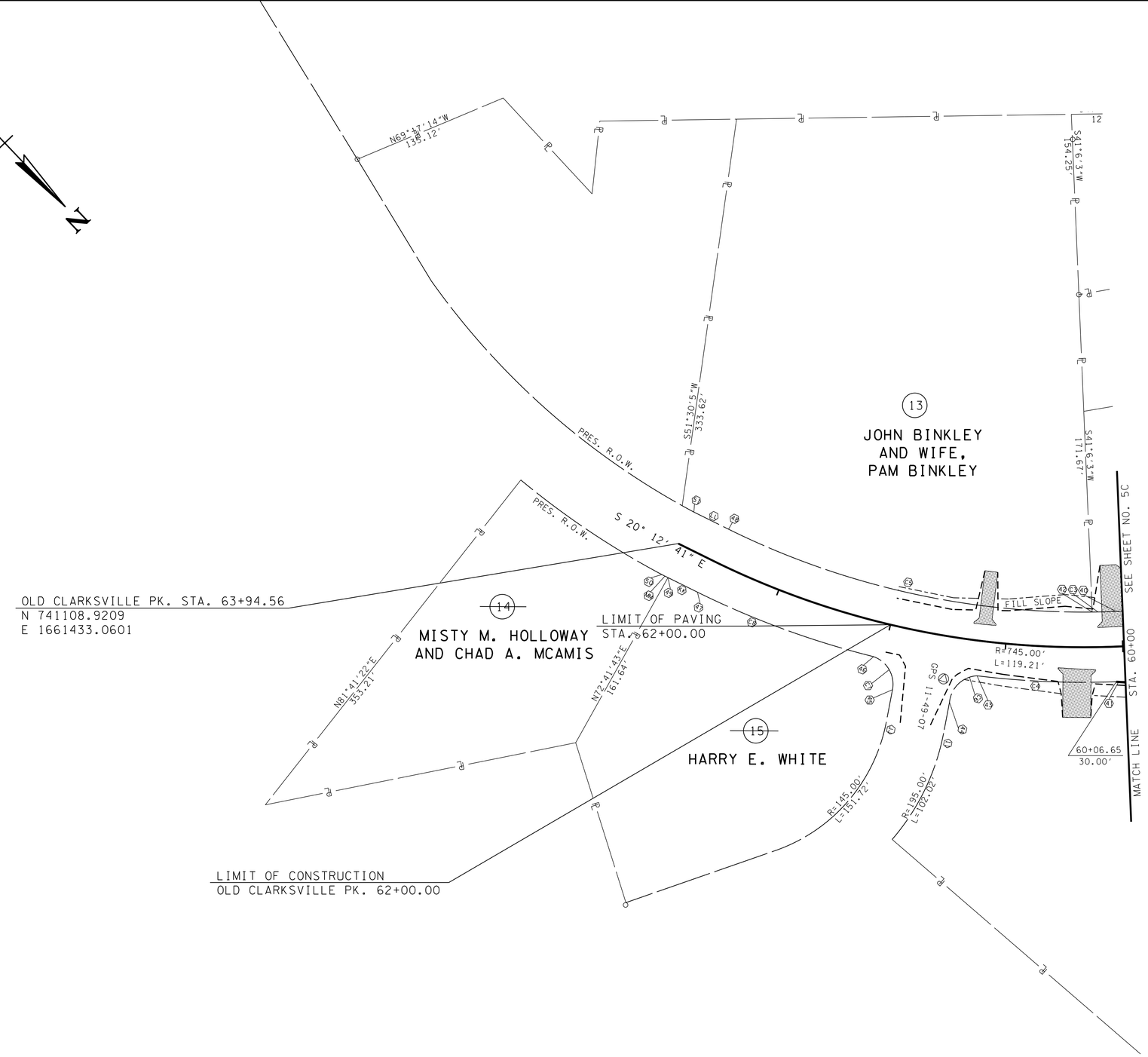

UNOFFICIAL SET

NOT FOR BIDDING

SEALED BY

COORDINATES ARE NAD/83(1995), ARE DATUM ADJUSTED BY THE FACTOR OF 1.00004 AND TIED TO THE TGRN. ALL ELEVATIONS ARE REFERENCED TO THE NAVD 1988.

STATE OF TENNESSEE
DEPARTMENT OF TRANSPORTATION

R.O.W. DETAILS

STA.60+00 TO STA.63+62.64

SCALE: 1"=50'

27-JAN-2014 10:11
\\JU03WF01.tdot.state.tn.us\03Shared\SURVEY\DESIGN\PIN 107847.00 Cheatham Co SR 49\007C.SHT

TENNESSEE D.O.T.
DESIGN DIVISION
FILE NO.

TYPE	YEAR	PROJECT NO.	SHEET NO.
R.O.W.	2012	STP-49(26)	8
CONST.	2014	STP-49(26)	8

REV. 07-08-13: RELOCATED PVT. DRS. STA. 17+33.51 AND 18+72.08. ADDED PVT. DR. STA. 18+02.79. DELETED PVT. DR. 22+85.

REV. 11-19-13: REVISED PVT. DR. STA. 19+39.00 AND STA. 24+20.00.

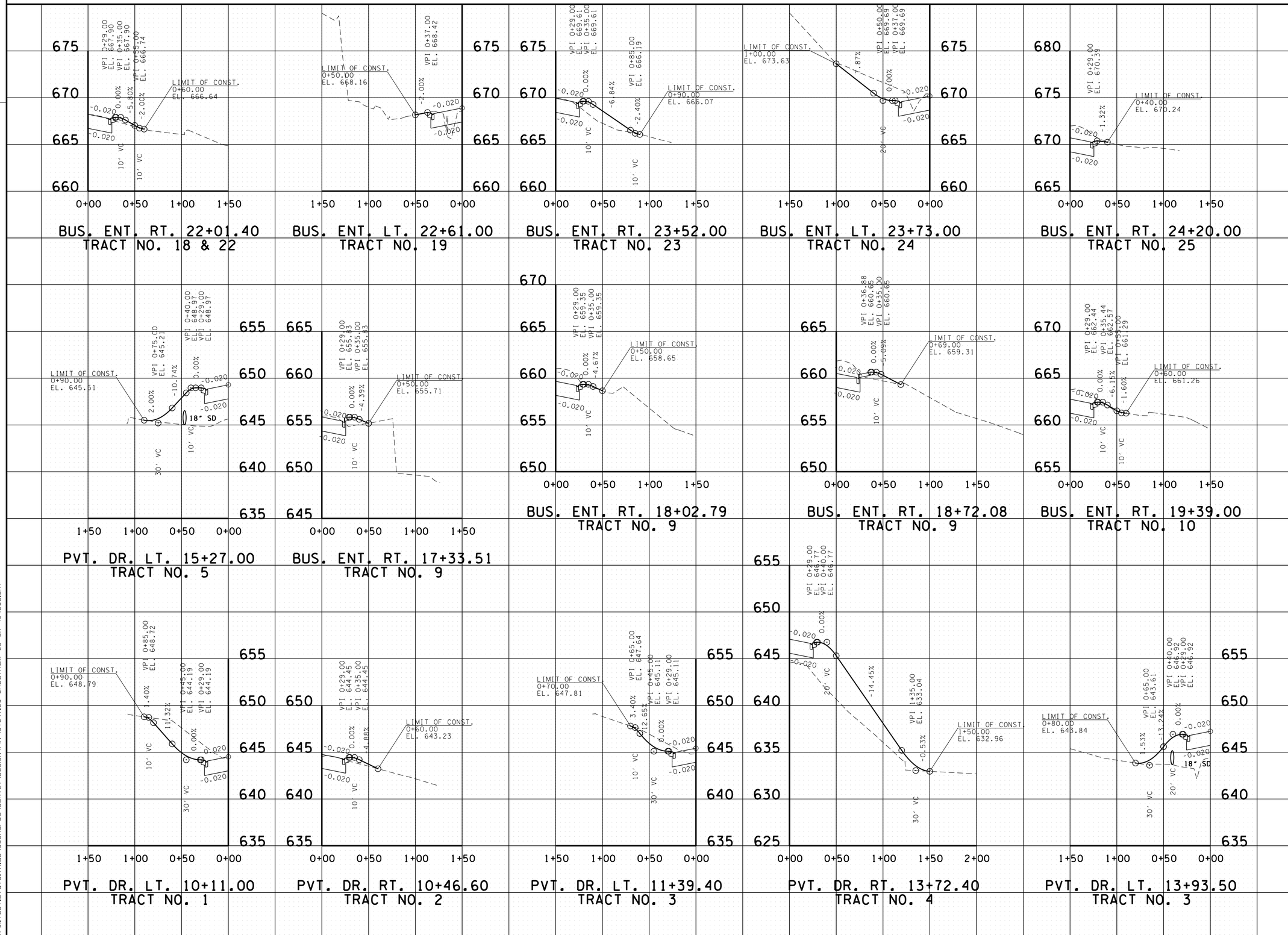

UNOFFICIAL SET

NOT FOR BIDDING

SEALED BY

STATE OF TENNESSEE
DEPARTMENT OF TRANSPORTATION

PROFILE OF PRIVATE DRIVES

SCALE: 1"=50' HOR.
1"=5' VERT.

27-JAN-2014 10:11
\\JJ03WF01.tdot.state.tn.us\03Shared\SURVEY\DESIGN\PIN 107847.00 Cheatham Co SR 49\008.SHT

TENNESSEE D.O.T.
DESIGN DIVISION
FILE NO.

TYPE	YEAR	PROJECT NO.	SHEET NO.
R.O.W.	2012	STP-49(26)	8A
CONST.	2014	STP-49(26)	8A

REV. 02-25-13: DELETED PVT. DRIVE STA. 52+30. ADDED PVT. DRIVE STA. 26+93.40.

REV. 11-19-13: REVISED PVT. DR. STA. 24+98.00, STA. 53+00.00, STA. 54+06.60, STA. 54+77.90, STA. 55+31.00, STA. 57+53.55, STA. 58+00.00, STA. 58+65.40, STA. 59+74.50, STA. 60+04.60, STA. 60+38.89 AND STA. 61+17.70.

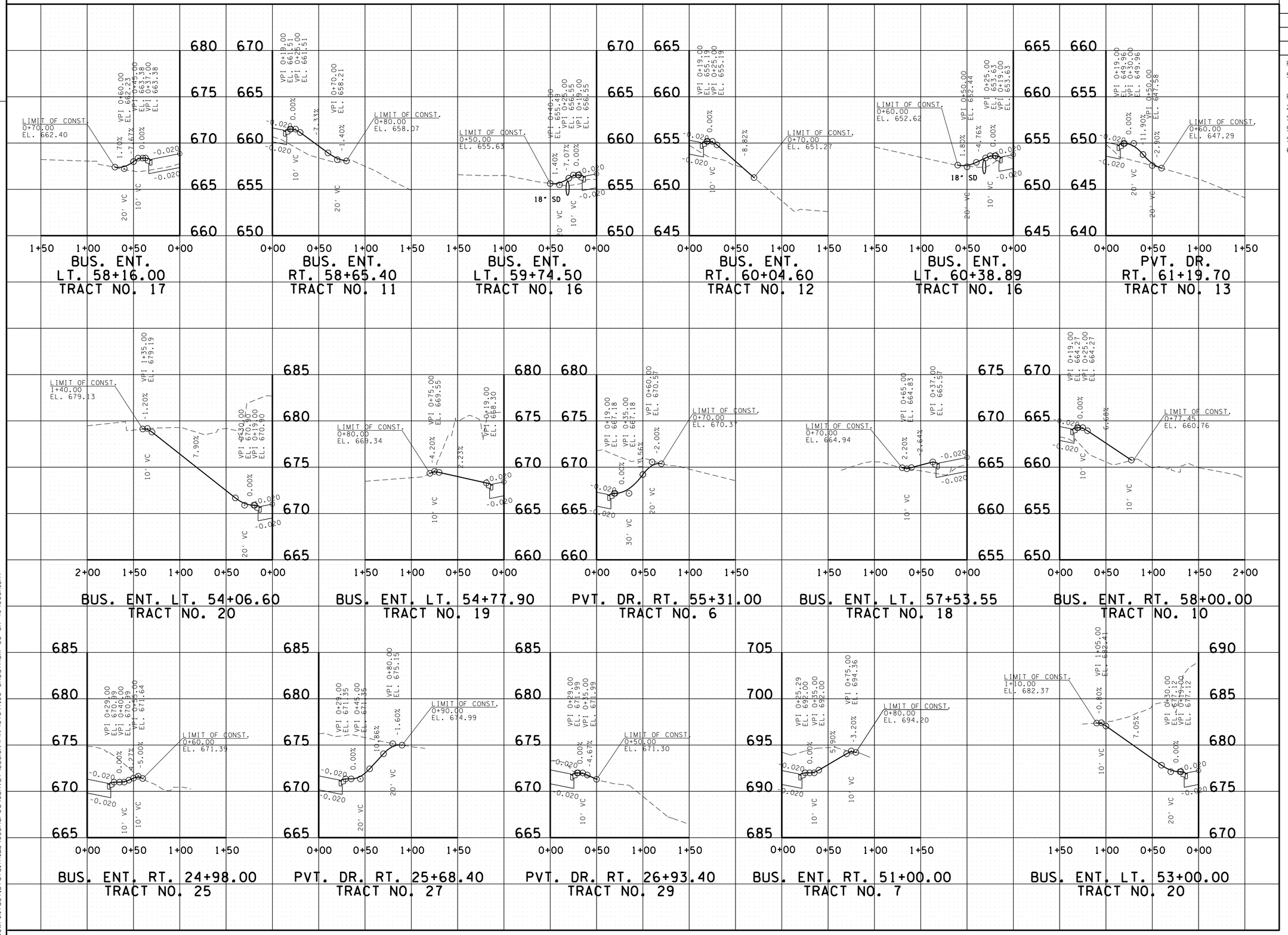

UNOFFICIAL SET

NOT FOR BIDDING

SEALED BY

LORI J. LANGE
REGISTERED ENGINEER
AGRICULTURE
COMMERCE
NO. 105011
STATE OF TENNESSEE

STATE OF TENNESSEE
DEPARTMENT OF TRANSPORTATION

PROFILE OF PRIVATE DRIVES

SCALE: 1"=50' HOR.
1"=5' VERT.

27-JAN-2014 10:11
\\JU03WF01.tdot.state.tn.us\03Shared\SURVEY\DESIGN\PIN 107847.00 Cheatham Co SR 49\008A.SHT

TENNESSEE D.O.T.
DESIGN DIVISION
FILE NO.

TYPE	YEAR	PROJECT NO.	SHEET NO.
R.O.W.	2012	STP-49(26)	9
CONST.	2014	STP-49(26)	9

DRAINAGE DATA FOR PIPE
STATION 14+63.33

DIRECTION OF FLOW RIGHT
DRAINAGE AREA 10.48 AC ,( )FLAT;(X)ROLLING;( )HILLY;( )MTNS.
PRESENT STRUCTURE: 24" PVC
EXISTING STRUCTURE CONDITION: FAIR
REMARKS: Q 50 = 35 cfs Q 100 = 40 cfs

DRAINAGE DATA FOR PIPE
STATION 55+37.20

DIRECTION OF FLOW RIGHT
DRAINAGE AREA 0.65 AC ,( )FLAT;(X)ROLLING;( )HILLY;( )MTNS.
PRESENT STRUCTURE: 18" RCP
EXISTING STRUCTURE CONDITION: FAIR
REMARKS: Q 50 = 2 cfs Q 100 = 3 cfs

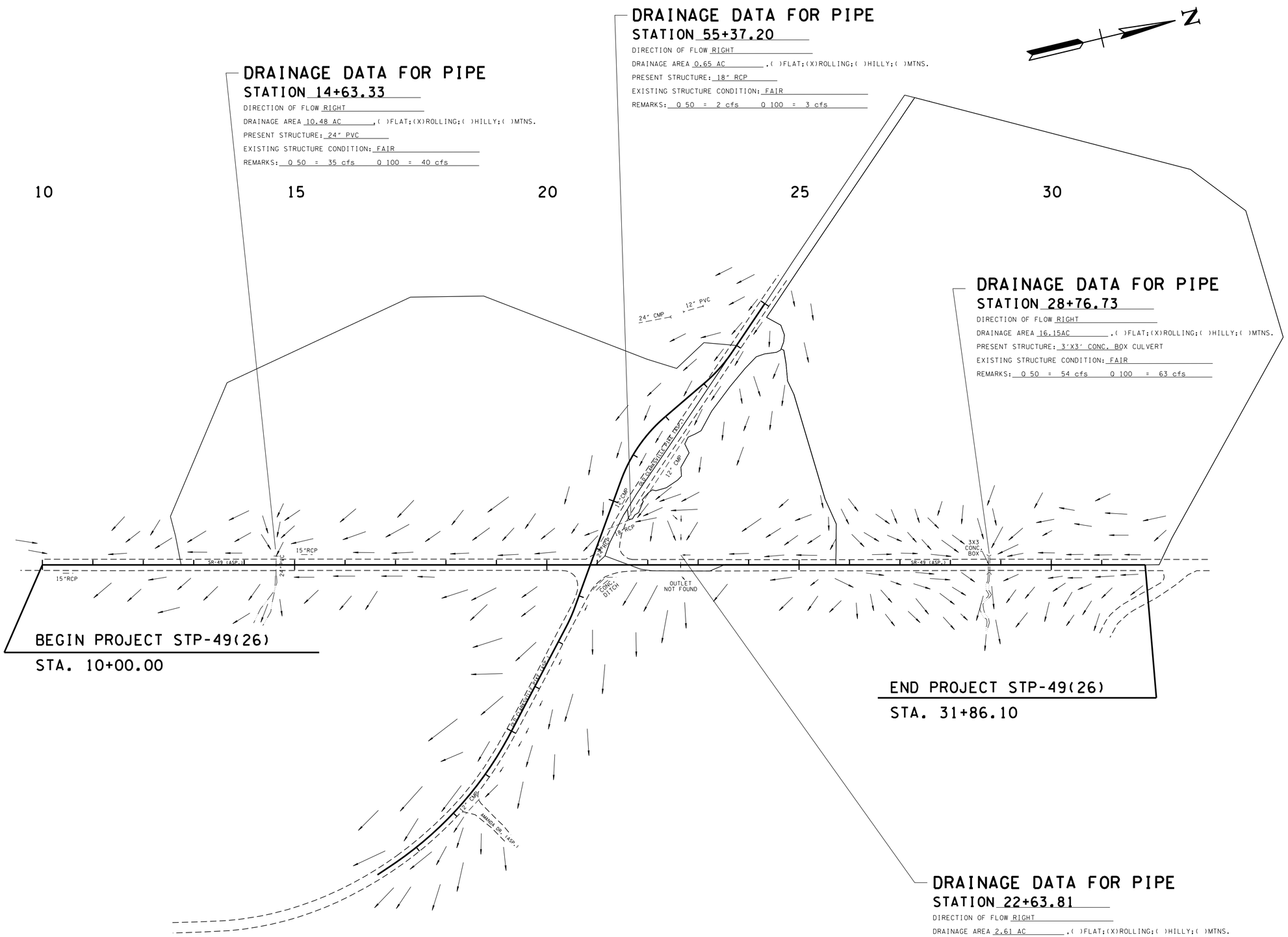

BEGIN PROJECT STP-49(26)
STA. 10+00.00

END PROJECT STP-49(26)
STA. 31+86.10

DRAINAGE DATA FOR PIPE
STATION 28+76.73

DIRECTION OF FLOW RIGHT
DRAINAGE AREA 16.15AC ,( )FLAT;(X)ROLLING;( )HILLY;( )MTNS.
PRESENT STRUCTURE: 3'X3' CONC. BOX CULVERT
EXISTING STRUCTURE CONDITION: FAIR
REMARKS: Q 50 = 54 cfs Q 100 = 63 cfs

DRAINAGE DATA FOR PIPE
STATION 22+63.81

DIRECTION OF FLOW RIGHT
DRAINAGE AREA 2.61 AC ,( )FLAT;(X)ROLLING;( )HILLY;( )MTNS.
PRESENT STRUCTURE: 18" RCP
EXISTING STRUCTURE CONDITION: FAIR
REMARKS: Q 50 = 9 cfs Q 100 = 10 cfs

UNOFFICIAL SET
NOT FOR BIDDING

SEALED BY

STATE OF TENNESSEE
DEPARTMENT OF TRANSPORTATION

DRAINAGE MAP

SCALE: 1"=100'

27-JAN-2014 10:11
\\JJ03WF01.tdot.state.tn.us\03Shared\SURVEY\DESIGN\PIN 107847.00 Cheatham Co SR 49\009.SHT

TENNESSEE D.O.T.
DESIGN DIVISION
FILE NO.

TYPE	YEAR	PROJECT NO.	SHEET NO.
R.O.W.	2012	STP-49(26)	10
CONST.	2014	STP-49(26)	10

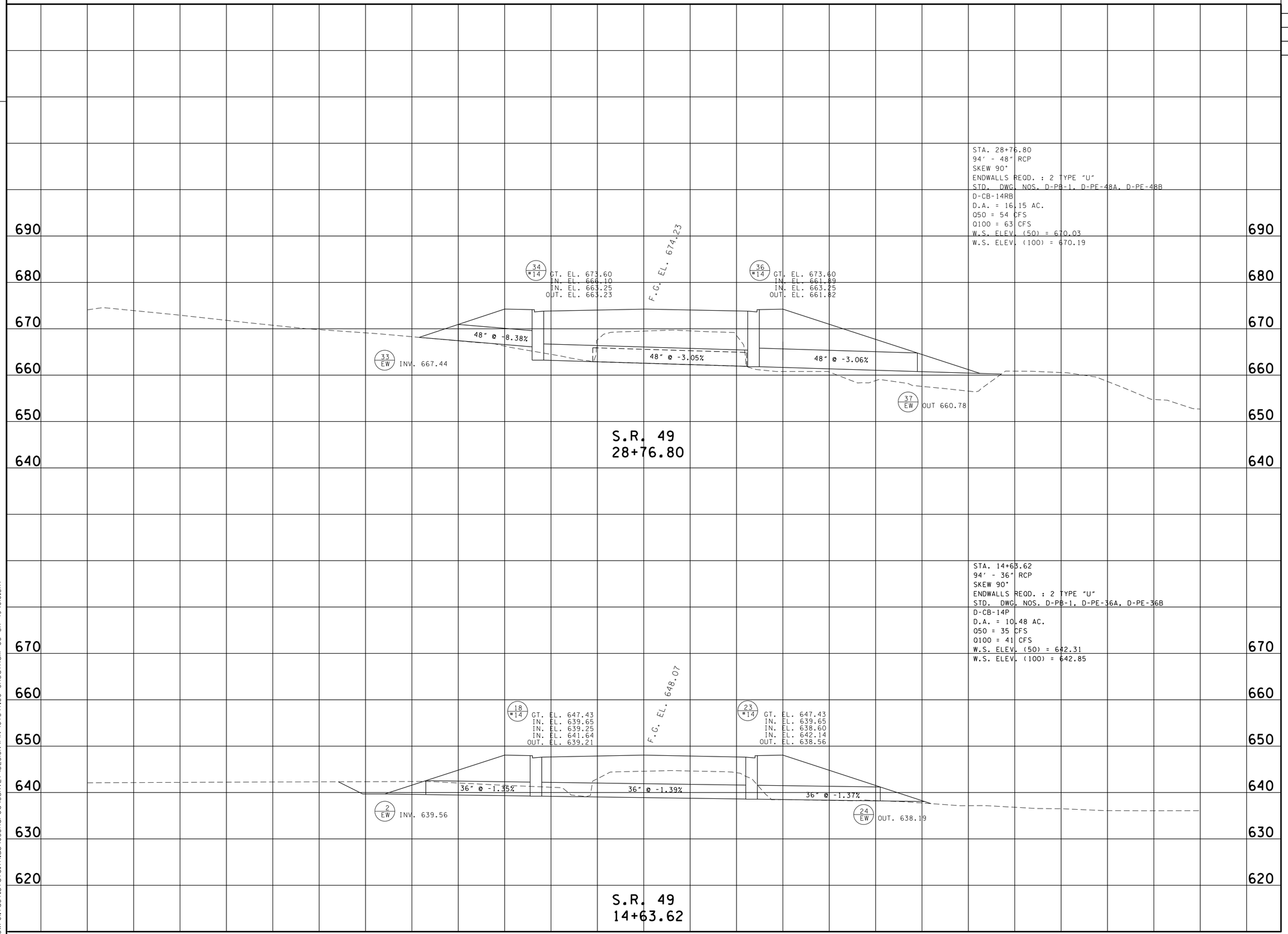

UNOFFICIAL SET

NOT FOR BIDDING

SEALED BY

LORI J. LANGE
REGISTERED ENGINEER
AGRICULTURE
COMMERCE
NO. 105017
STATE OF TENNESSEE

STATE OF TENNESSEE
DEPARTMENT OF TRANSPORTATION

CULVERT CROSS-SECTIONS

SCALE: 1"=10' HORIZ.
1"=10' VERT.

27-JAN-2014 10:11
\\JO3WF01.tdot.state.tn.us\03Shared\SURVEY\DESIGN\PIN 107847.00 Cheatham Co SR 49\010.SHT

TYPE	YEAR	PROJECT NO.	SHEET NO.
CONST.	2014	STP-49(26)	11

EROSION PREVENTION AND SEDIMENT CONTROL NOTES

NPDES

(1) NO WORK SHALL BE STARTED UNTIL THE CONTRACTOR'S PLAN FOR THE STAGING OF THEIR OPERATIONS, INCLUDING THE PLAN FOR STAGING OF TEMPORARY AND PERMANENT EPSC MEASURES, HAS BEEN ACCEPTED BY THE ENGINEER. THE CONTRACTOR'S EPSC PLAN SHALL INCORPORATE AND SUPPLEMENT, AS ACCEPTABLE, THE BASIC EPSC DEVICES ON THE EPSC PLAN CONTAINED IN THE APPROVED SWPPP.

(2) THE EPSC MEASURES AND/OR PLAN SHALL BE MODIFIED AS NECESSARY SO THAT THEY ARE EFFECTIVE AT ALL TIMES THROUGHOUT THE COURSE OF THE PROJECT.

(3) THE ACCEPTED EPSC PLAN SHALL REQUIRE THAT EPSC MEASURES BE IN PLACE BEFORE CLEARING, GRUBBING, EXCAVATION, GRADING, CUTTING OR FILLING OCCURS, EXCEPT AS SUCH WORK MAY BE NECESSARY TO INSTALL EPSC MEASURES, INCLUDING WITHOUT LIMITATION AS FOLLOWS:

A. INITIAL CLEARING AND GRUBBING SHALL BE LIMITED TO THAT NECESSARY FOR THE INSTALLATION OF APPLICABLE EPSC MEASURES IN ACCORDANCE WITH THE ACCEPTED EPSC PLAN INCORPORATED INTO THE SWPPP.

B. NO OTHER CLEARING AND GRUBBING OPERATIONS SHALL BE STARTED BEFORE APPLICABLE EPSC MEASURES ARE IN PLACE IN ACCORDANCE WITH THE ACCEPTED EPSC PLAN INCORPORATED INTO THE SWPPP.

C. NO CULVERT OR BRIDGE CONSTRUCTION SHALL BE STARTED BEFORE APPLICABLE EPSC MEASURES ARE IN PLACE IN ACCORDANCE WITH THE ACCEPTED EPSC PLAN INCORPORATED INTO THE SWPPP.

D. NO GRADING, EXCAVATION, CUTTING, FILLING, OR OTHER EARTHWORK SHALL BE STARTED BEFORE EPSC MEASURES ARE IN PLACE IN ACCORDANCE WITH THE ACCEPTED EPSC PLAN INCORPORATED INTO THE SWPPP.

(4) PERMANENT EPSC MEASURES SHALL BE INITIATED WITHIN 14 CALENDAR DAYS AFTER FINAL GRADING OF ANY SEQUENCE OR PHASE. TEMPORARY OR PERMANENT STABILIZATION SHALL BE INITIATED WITHIN 14 CALENDAR DAYS AFTER FINAL GRADING OR WHEN CONSTRUCTION ACTIVITIES ON A PORTION OF THE SITE ARE TEMPORARILY CEASED AND EARTH DISTURBING ACTIVITIES WILL NOT RESUME UNTIL AFTER 14 CALENDAR DAYS. PERMANENT STABILIZATION WITH PERENNIAL VEGETATION OR OTHER PERMANENTLY STABLE NON-ERODING SURFACE SHALL REPLACE ANY TEMPORARY MEASURES AS SOON AS PRACTICABLE. UNPACKED GRAVEL CONTAINING FINES (SILT AND CLAY SIZED PARTICLES) OR CRUSHER-RUN WILL NOT BE CONSIDERED A NON-ERODIBLE SURFACE.

(5) STEEP SLOPES (A NATURAL OR CREATED SLOPE OF 35% GRADE (2.8H:1V) OR GREATER REGARDLESS OF HEIGHT) SHALL BE TEMPORARILY STABILIZED NO LATER THAN 7 CALENDAR DAYS AFTER CONSTRUCTION ACTIVITY ON THE SLOPE HAS TEMPORARILY OR PERMANENTLY CEASED.

(6) FOR STORMWATER DISCHARGES ASSOCIATED WITH CONSTRUCTION SUPPORT ACTIVITIES; TDOT PROJECTS ARE COVERED UNDER THE "WASTE AND BORROW" MANUAL PER THE SSWMP.

(7) EXCEPT AS OTHERWISE SPECIFIED, THERE ARE NO KNOWN SPECIAL ENVIRONMENTAL FACTORS PRESENT ON THIS PROJECT THAT INDICATE A NEED FOR SEASONAL LIMITATIONS ON THE CLEARING, GRUBBING, EXCAVATION, GRADING, CUTTING OR FILLING OPERATIONS OR ON THE TOTAL AREA OF EXPOSED SOIL.

ESTIMATED EROSION PREVENTION AND SEDIMENT CONTROL QUANTITIES

	ITEM NO.	DESCRIPTION	UNIT	PHASE I	PHASE II	PHASE III	QUANTITY
1,3	203-01	ROAD & DRAINAGE EXCAVATION (UNCLASSIFIED)	C.Y.	542	93	536	1171
	209-03.20	FILTER SOCK (8 INCH)	L.F.	922	441	847	2210
	209-05	SEDIMENT REMOVAL	C.Y.	560	530	560	1650
	209-08.02	TEMPORARY SILT FENCE (WITH BACKING)	L.F.	431	252	432	1115
	209-08.03	TEMPORARY SILT FENCE (WITHOUT BACKING)	L.F.	1299	450	1617	3366
	209-08.05	ENHANCED SILT FENCE CHECK (V-DITCH)	EACH	0	2	0	2
	209-08.07	ROCK CHECK DAM PER	EACH	24	5	24	53
	209-08.08	ENHANCED ROCK CHECK DAM	EACH	8	5	8	21
	209-09.01	SANDBAGS	BAG	100	0	100	200
2	209-09.04	SEDIMENT FILTER BAG(15' X 10')	EACH	4	0	4	8
	209-09.43	CURB INLET PROTECTION (TYPE 4)	EACH	0	17	9	26
	209-40.41	CATCH BASIN FILTER ASSEMBLY(TYPE 1)	EACH	0	1	1	2
	209-40.42	CATCH BASIN FILTER ASSEMBLY(TYPE 2)	EACH	1	0	0	1
1,2,3	303-10.01	MINERAL AGGREGATE (SIZE 57)	TON	84	84	0	168
1,3	709-05.05	MACHINED RIP-RAP (CLASS A-3)	TON	68	68	68	204
1,3	709-05.06	MACHINED RIP-RAP (CLASS A-1)	TON	95	95	5	195
1,2,3	740-10.03	GEOTEXTILE (TYPE III)(EROSION CONTROL)	S.Y.	1448	1448	1396	4372
	740-11.01	TEMPORARY SEDIMENT TUBE 8IN (SLOPE APPLICATION)	L.F.	1091	790	654	2535
	801-03	WATER (SEEDING & SODDING)	M.G.	2	2	2	6
	805-12.02	EROSION CONTROL BLANKET (TYPE II)	S.Y.	1057	0	0	1057

FOOTNOTES

1. INCLUDES QUANTITY FOR TEMPORARY CONSTRUCTION EXITS. EC-STR-25
2. INCLUDES QUANTITY FOR SEDIMENT FILTER BAGS. EC-STR-2
3. INCLUDES QUANTITY FOR CULVERT PROTECTION. EC-STR-11

NOTES

(1) ALL QUANTITIES MAY BE INCREASED OR DECREASED AND ARE TO BE USED AS DIRECTED BY THE ENGINEER.
(2) SILT FENCES ARE TO BE PLACED ALONG CONTOURS.
(3) SILT FENCE NOT ON CONTOURS ARE TO BE ERECTED USING THE "J-HOOK" METHOD.

UNOFFICIAL SET

NOT FOR BIDDING

SEALED BY

STATE OF TENNESSEE
DEPARTMENT OF TRANSPORTATION

EROSION PREVENTION AND SEDIMENT CONTROL PLAN SPECIAL NOTES

27-JAN-2014 10:11
\\JJ03WF01.tdot.state.tn.us\03Shared\SURVEY\DESIGN\PIN 107847.00 Cheatham Co SR 49\011.SHT

TENNESSEE D.O.T.
DESIGN DIVISION
FILE NO.

TYPE	YEAR	PROJECT NO.	SHEET NO.
R.O.W.	2012	STP-49(26)	11
CONST.	2014	STP-49(26)	11A

10

15

EROSION PREVENTION AND SEDIMENT CONTROL LEGEND

SYMBOL	ITEM	STD. DWG.	SYMBOL	ITEM	STD. DWG.
SFB SFB SFB SFB	SEDIMENT FILTER BAG	EC-STR-2	TCE	TEMPORARY CONSTRUCTION EXIT	EC-STR-25
* SF * SF * SF *	SILT FENCE	EC-STR-3B	TTTTTTTTT	TEMPORARY BERM	EC-STR-27
* SFB * SFB * SFB *	SILT FENCE WITH WIRE BACKING	EC-STR-3C		RIPRAP	EC-STR-27
	ENHANCED SILT FENCE CHECK (V-DITCH)	EC-STR-4A		EROSION CONTROL BLANKET	EC-STR-34
	ROCK CHECK DAM (V-DITCH)	EC-STR-6	** TUBE ** TUBE **	SEDIMENT TUBE	EC-STR-37
	ENHANCED ROCK CHECK DAM (V-DITCH)	EC-STR-6A	4	CURB INLET PROTECTION (TYPE 4)	EC-STR-39A
** SOCK ** SOCK **	FILTER SOCK	EC-STR-8	3	CATCH BASIN FILTER ASSEMBLY (TYPE 3)	EC-STR-43
	CULVERT PROTECTION (TYPE 1)	EC-STR-11	4	CATCH BASIN FILTER ASSEMBLY (TYPE 4)	EC-STR-44

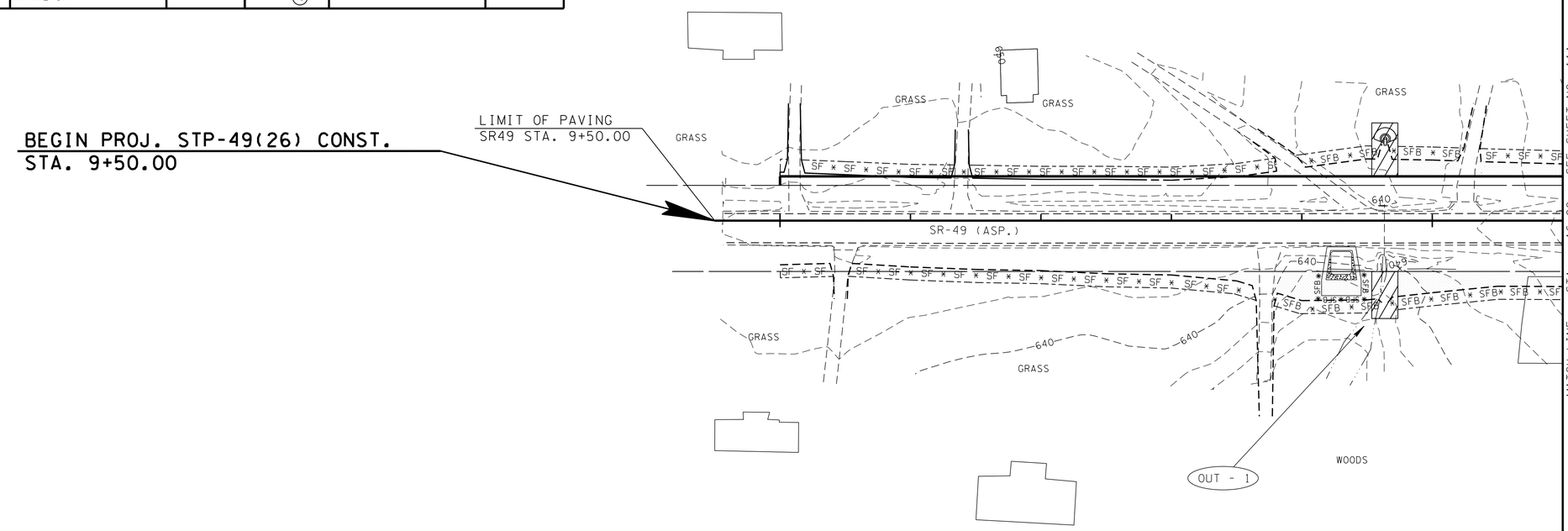

OUTFALL DATA
OUTFALL 1: STORM WATER DISCHARGE FROM THE CONSTRUCTION SITE BY MEANS OF A PIPE INTO A STREAM. DRAINAGE AREA 2.32 ACRES, SLOPE 3.36%±.

TCE — TEMPORARY CONSTRUCTION EXIT TO BE LOCATED BY THE ENGINEER

UNOFFICIAL SET

NOT FOR BIDDING

SEALED BY

STATE OF TENNESSEE
DEPARTMENT OF TRANSPORTATION

EROSION PREVENTION AND SEDIMENT CONTROL PLAN

PHASE I

SCALE: 1"=50'

27-JAN-2014 10:12
\\JJ03WF01.tdot.state.tn.us\03Shared\SURVEY\DESIGN\PIN 107847.00 Cheatham Co SR 49\011A.SHT

TENNESSEE D.O.T.
DESIGN DIVISION
FILE NO.

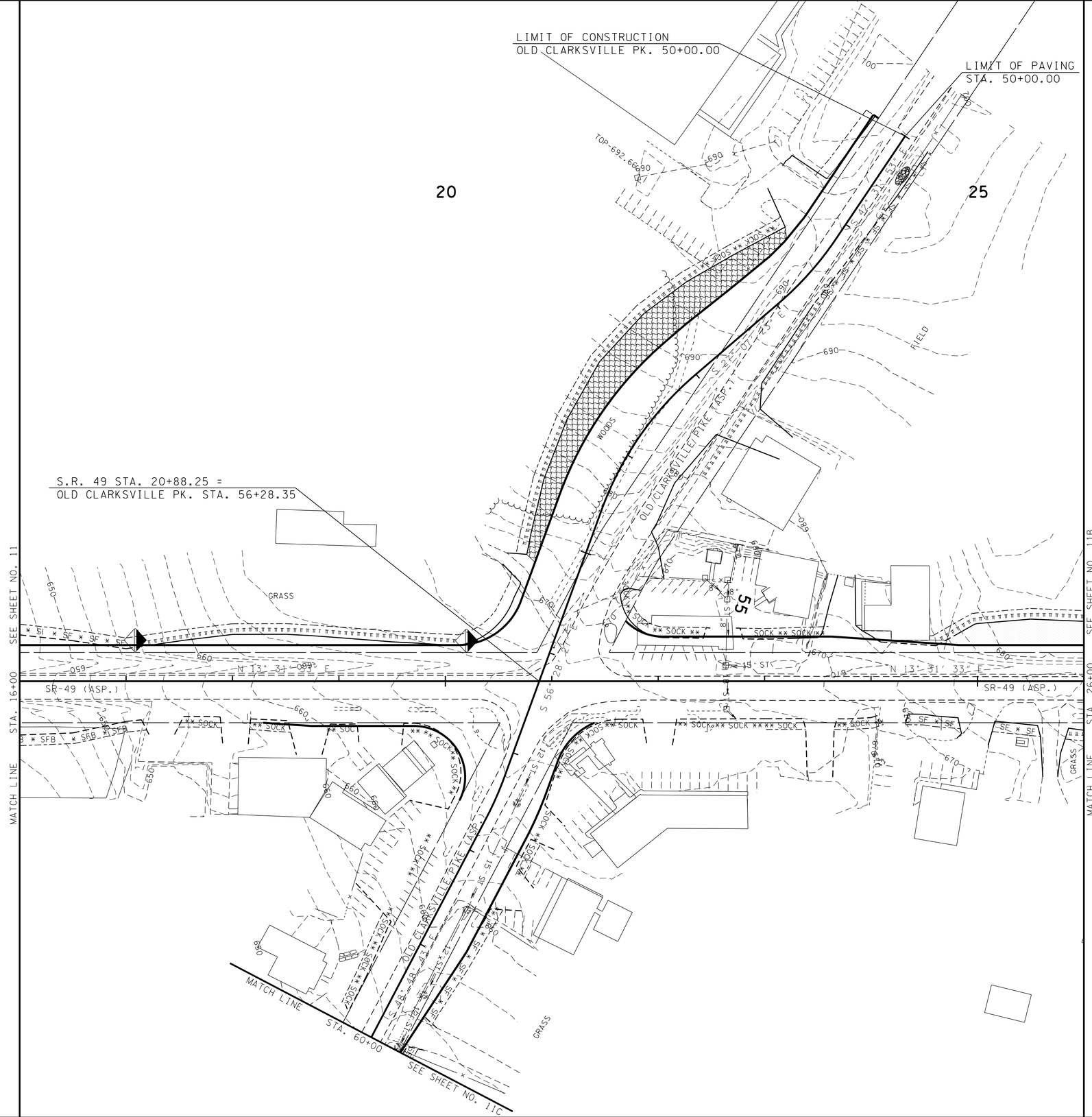

SEE SHEET 11A FOR LEGEND

TYPE	YEAR	PROJECT NO.	SHEET NO.
R.O.W.	2012	STP-49(26)	11A
CONST.	2014	STP-49(26)	11B

REV. 07-08-13: RELOCATED PVT. DRS. STA. 17+33.51 AND 18+72.08. ADDED PVT. DR. STA. 18+02.79. DELETED PVT. DR. 22+85. ADJUSTED SLOPES, EASEMENT AND EROSION CONTROL DEVICES.

UNOFFICIAL SET

NOT FOR BIDDING

SEALED BY

STATE OF TENNESSEE
DEPARTMENT OF TRANSPORTATION

EROSION PREVENTION AND SEDIMENT CONTROL PLAN

PHASE I

SCALE: 1"=50'

27-JAN-2014 10:12
\\JJO3WF01.tdot.state.tn.us\03Shared\SURVEY\DESIGN\PIN 107847.00 Cheatham Co SR 49\011B.SHT

TENNESSEE D.O.T.
DESIGN DIVISION
FILE NO.

TYPE	YEAR	PROJECT NO.	SHEET NO.
R.O.W.	2012	STP-49(26)	11B
CONST.	2014	STP-49(26)	11C

SEE SHEET 11A FOR LEGEND

30

5C

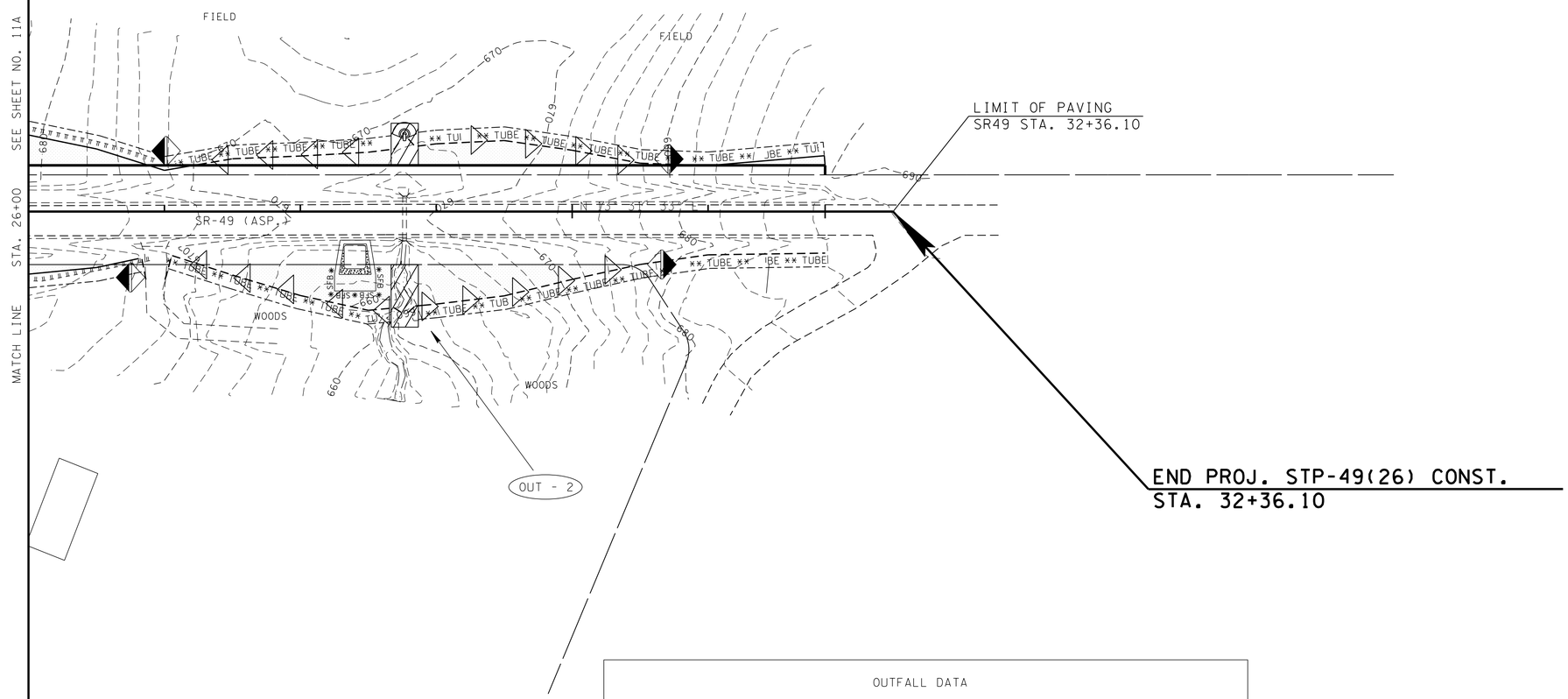

OUTFALL DATA
OUTFALL 2: STORM WATER DISCHARGE FROM THE CONSTRUCTION SITE BY MEANS OF A PIPE INTO A STREAM. DRAINAGE AREA 0.67 ACRES, SLOPE 5.44%±.

TCE	TEMPORARY CONSTRUCTION EXIT TO BE LOCATED BY THE ENGINEER

UNOFFICIAL SET

NOT FOR BIDDING

SEALED BY

STATE OF TENNESSEE
DEPARTMENT OF TRANSPORTATION

EROSION PREVENTION AND SEDIMENT CONTROL PLAN

PHASE I

SCALE: 1"=50'

27-JAN-2014 10:12
\\JO3WF01.tdot.state.tn.us\03Shared\SURVEY\DESIGN\PIN 107847.00 Cheatham Co SR 49\OIIC.SHT

TENNESSEE D.O.T.
DESIGN DIVISION
FILE NO.

TYPE	YEAR	PROJECT NO.	SHEET NO.
R.O.W.	2012	STP-49(26)	11C
CONST.	2014	STP-49(26)	11D

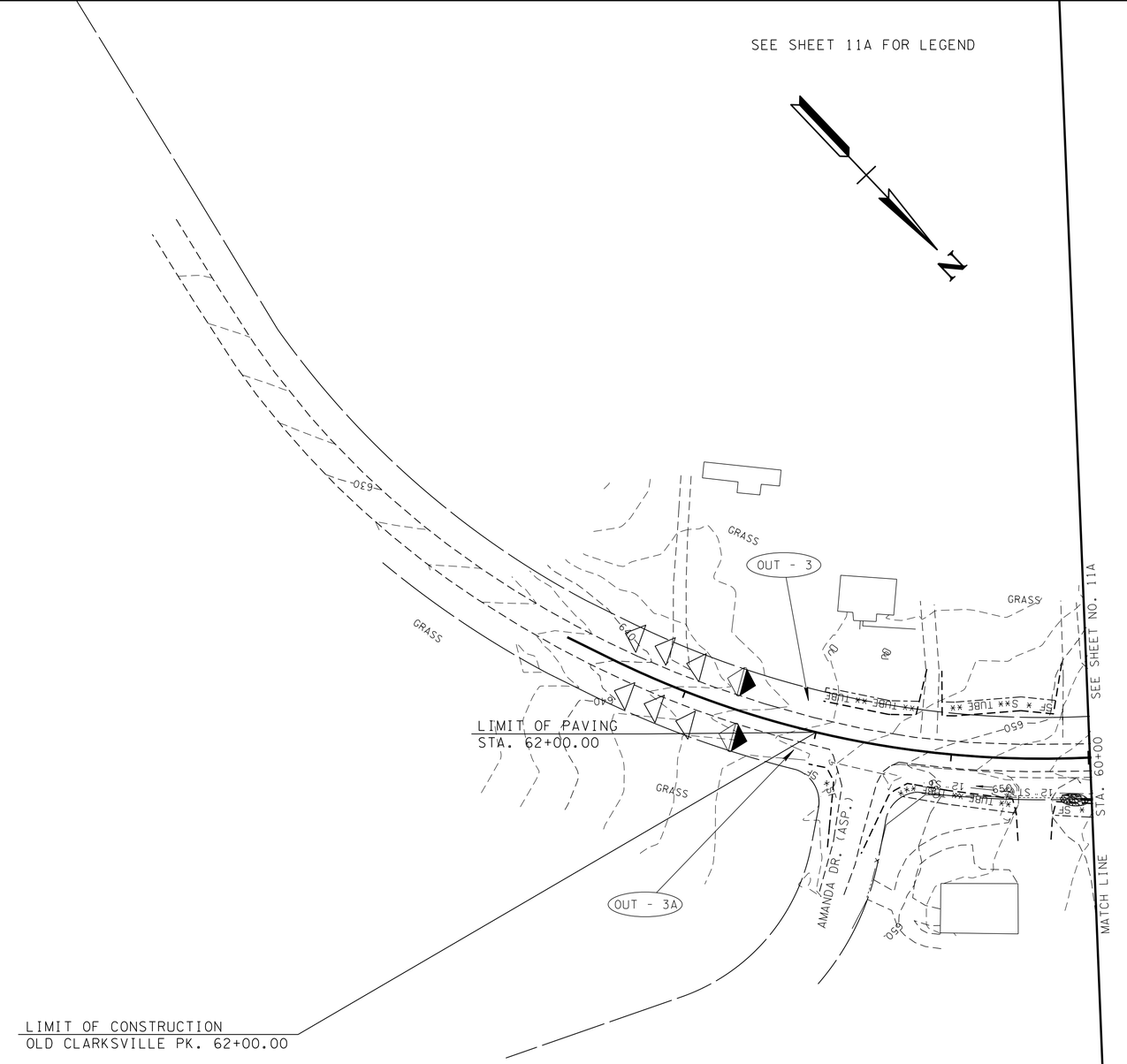

OUTFALL DATA
OUTFALLS 3 & 3A: STORM WATER FROM THESE OUTFALLS DISCHARGE FROM THE CONSTRUCTION SITE BY MEANS OF PIPES INTO A DITCH. DRAINAGE AREA 0.60 ACRE, SLOPE 4.54%±.

UNOFFICIAL SET

NOT FOR BIDDING

SEALED BY

STATE OF TENNESSEE
DEPARTMENT OF TRANSPORTATION

EROSION PREVENTION AND SEDIMENT CONTROL PLAN

PHASE I

SCALE: 1"=50'

27-JAN-2014 10:12
\\JJ03WF01.tdot.state.tn.us\03Shared\SURVEY\DESIGN\PIN 107847.00 Cheatham Co SR 49\OIID.SHT

TENNESSEE D.O.T.
DESIGN DIVISION
FILE NO.

TYPE	YEAR	PROJECT NO.	SHEET NO.
R.O.W.	2012	STP-49(26)	11D
CONST.	2014	STP-49(26)	11E

SEE SHEET 11A FOR LEGEND

10

15

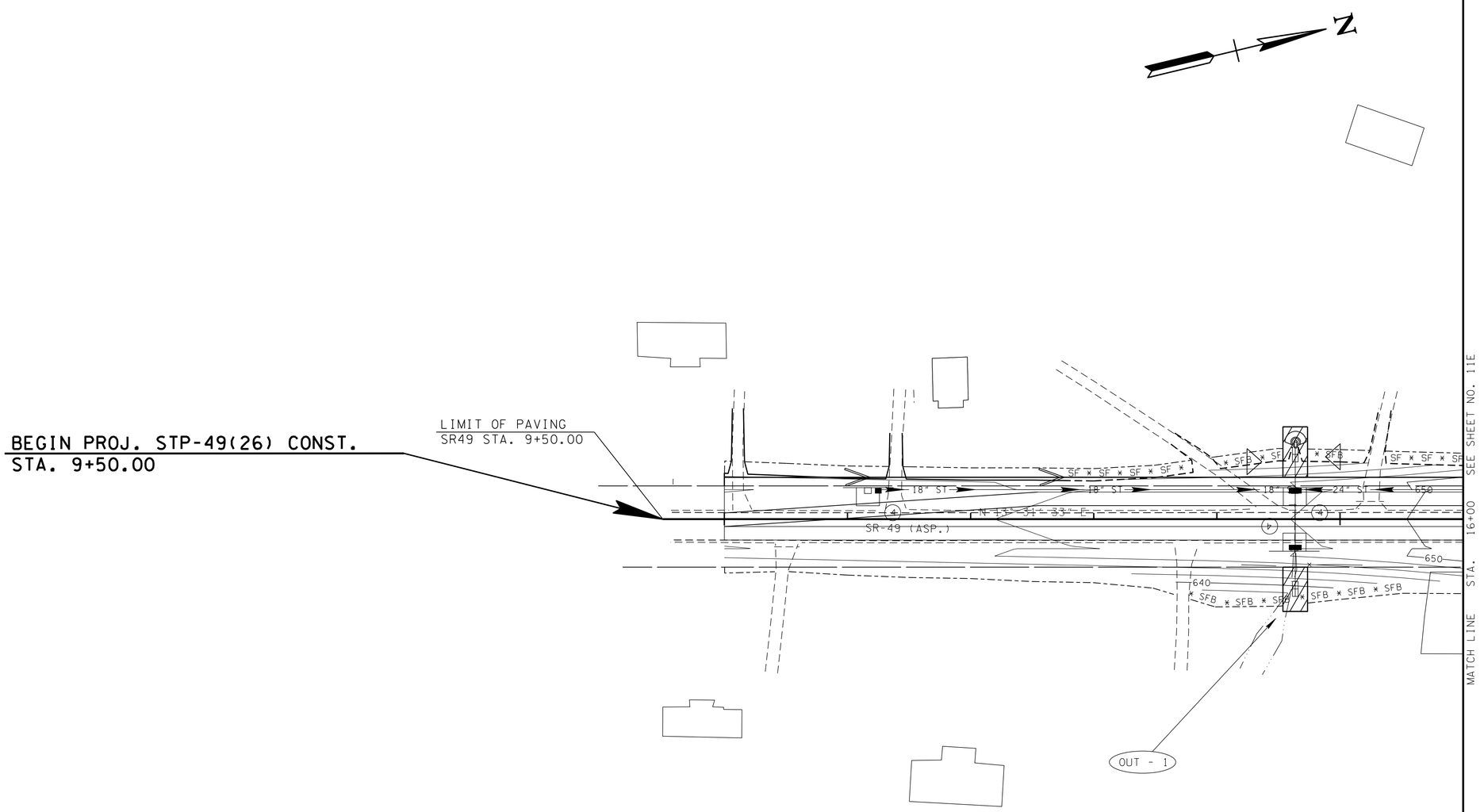

OUTFALL DATA
OUTFALL 1: STORM WATER DISCHARGE FROM THE CONSTRUCTION SITE BY MEANS OF A PIPE INTO A STREAM. DRAINAGE AREA 2.32 ACRES, SLOPE 3.36%±.

TCE	TEMPORARY CONSTRUCTION EXIT TO BE LOCATED BY THE ENGINEER

UNOFFICIAL SET

NOT FOR BIDDING

SEALED BY

STATE OF TENNESSEE
DEPARTMENT OF TRANSPORTATION

EROSION PREVENTION AND SEDIMENT CONTROL PLAN

PHASE II

SCALE: 1"=50'

27-JAN-2014 10:12
\\JJO3WF01.tdot.state.tn.us\03Shared\SURVEY\DESIGN\PIN 107847.00 Cheatham Co SR 49\OIIE.SHT

TENNESSEE D.O.T.
DESIGN DIVISION
FILE NO.

TYPE	YEAR	PROJECT NO.	SHEET NO.
R.O.W.	2012	STP-49(26)	11E
CONST.	2014	STP-49(26)	11F

SEE SHEET 11A FOR LEGEND

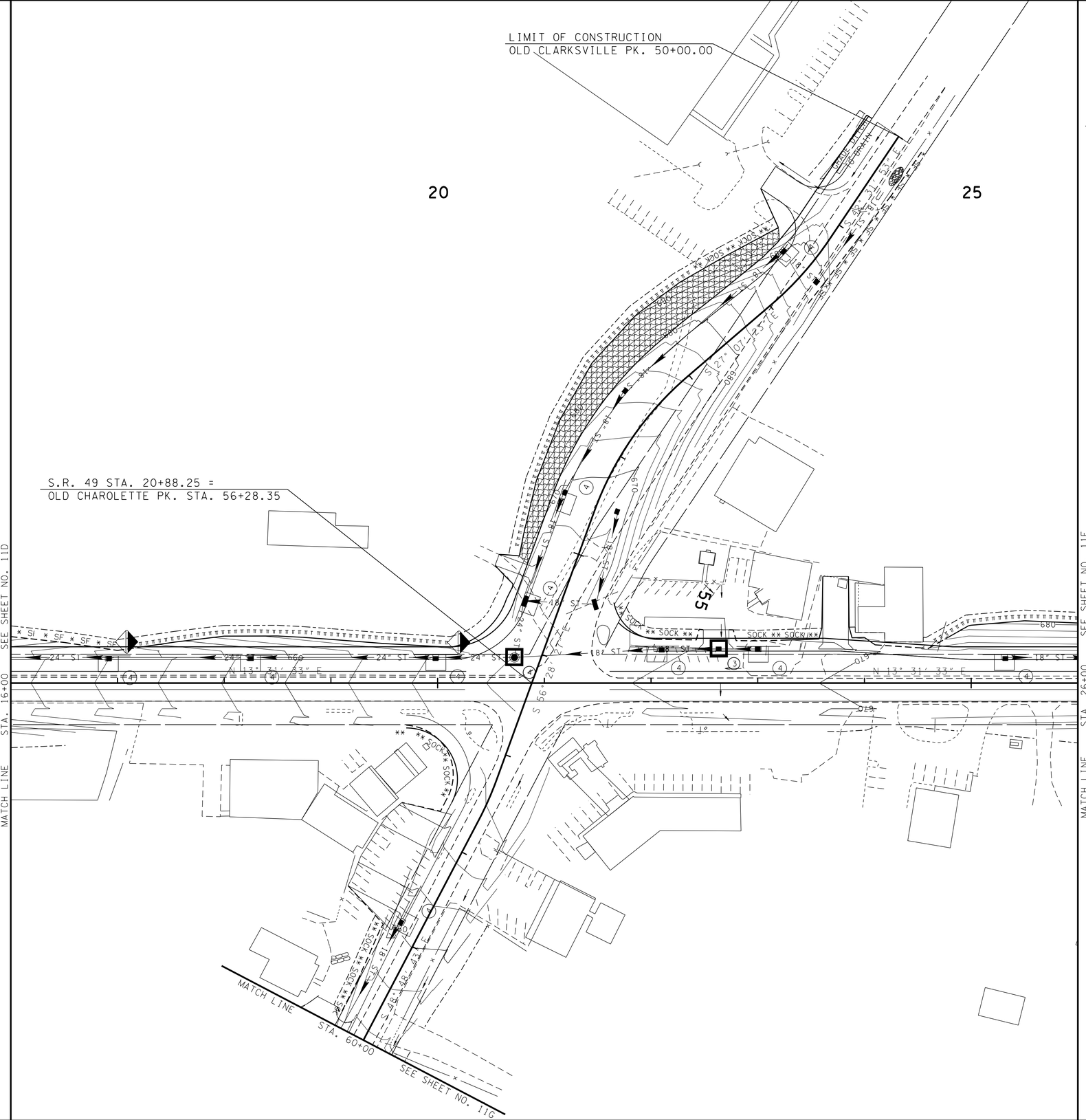

UNOFFICIAL SET

NOT FOR BIDDING

SEALED BY

STATE OF TENNESSEE
DEPARTMENT OF TRANSPORTATION

EROSION PREVENTION AND SEDIMENT CONTROL PLAN

PHASE II

SCALE: 1"=50'

27-JAN-2014 10:12
\\JJ03WF01.tdot.state.tn.us\03Shared\SURVEY\DESIGN\PIN 107847.00 Cheatham Co SR 49\01F.SHT

TENNESSEE D.O.T.
DESIGN DIVISION
FILE NO.

TYPE	YEAR	PROJECT NO.	SHEET NO.
R.O.W.	2012	STP-49(26)	11F
CONST.	2014	STP-49(26)	11G

SEE SHEET 11A FOR LEGEND

30

50

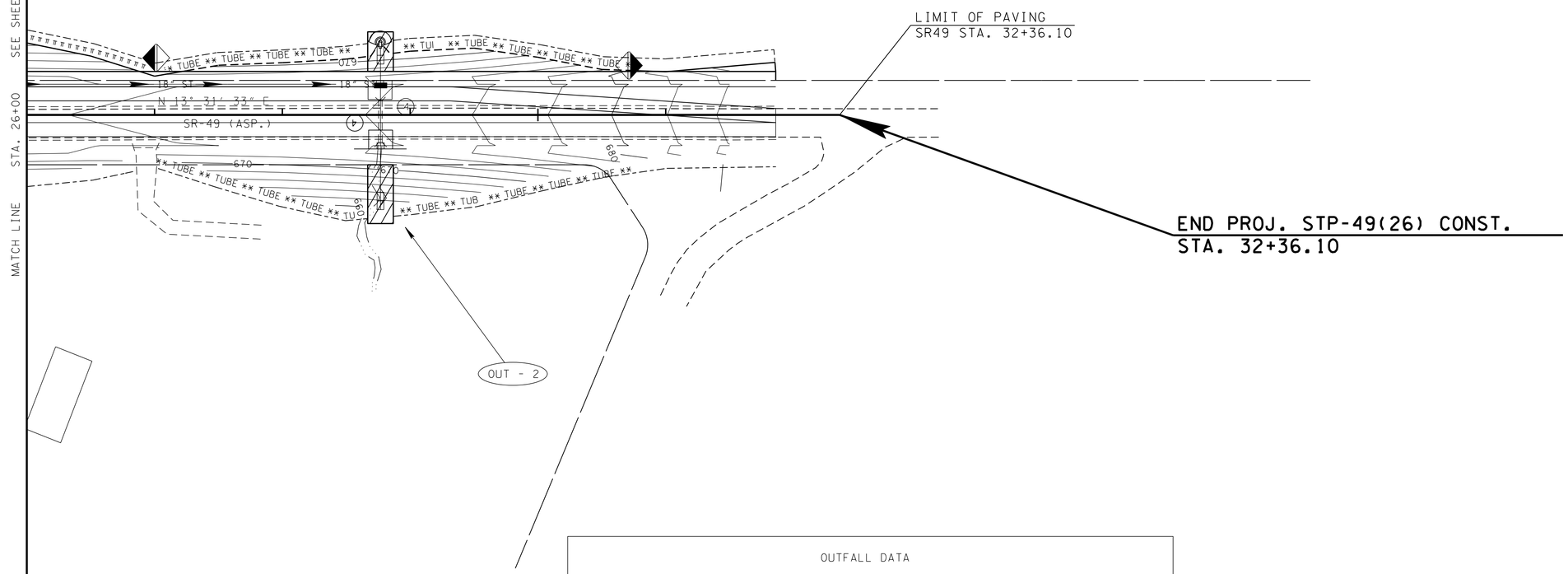

OUTFALL DATA
OUTFALL 2: STORM WATER DISCHARGE FROM THE CONSTRUCTION SITE BY MEANS OF A PIPE INTO A STREAM. DRAINAGE AREA 0.67 ACRES, SLOPE 5.44%±.

TCE	TEMPORARY CONSTRUCTION EXIT TO BE LOCATED BY THE ENGINEER

UNOFFICIAL SET

NOT FOR BIDDING

SEALED BY

STATE OF TENNESSEE
DEPARTMENT OF TRANSPORTATION

EROSION PREVENTION AND SEDIMENT CONTROL PLAN

PHASE II

SCALE: 1"=50'

27-JAN-2014 10:12
\\JJ03WF01.tdot.state.tn.us\03Shared\SURVEY\DESIGN\PIN 107847.00 Cheatham Co SR 49\01IG.SHT

TYPE	YEAR	PROJECT NO.	SHEET NO.
R.O.W.	2012	STP-49(26)	11G
CONST.	2014	STP-49(26)	11H

TENNESSEE D.O.T.
DESIGN DIVISION
FILE NO.

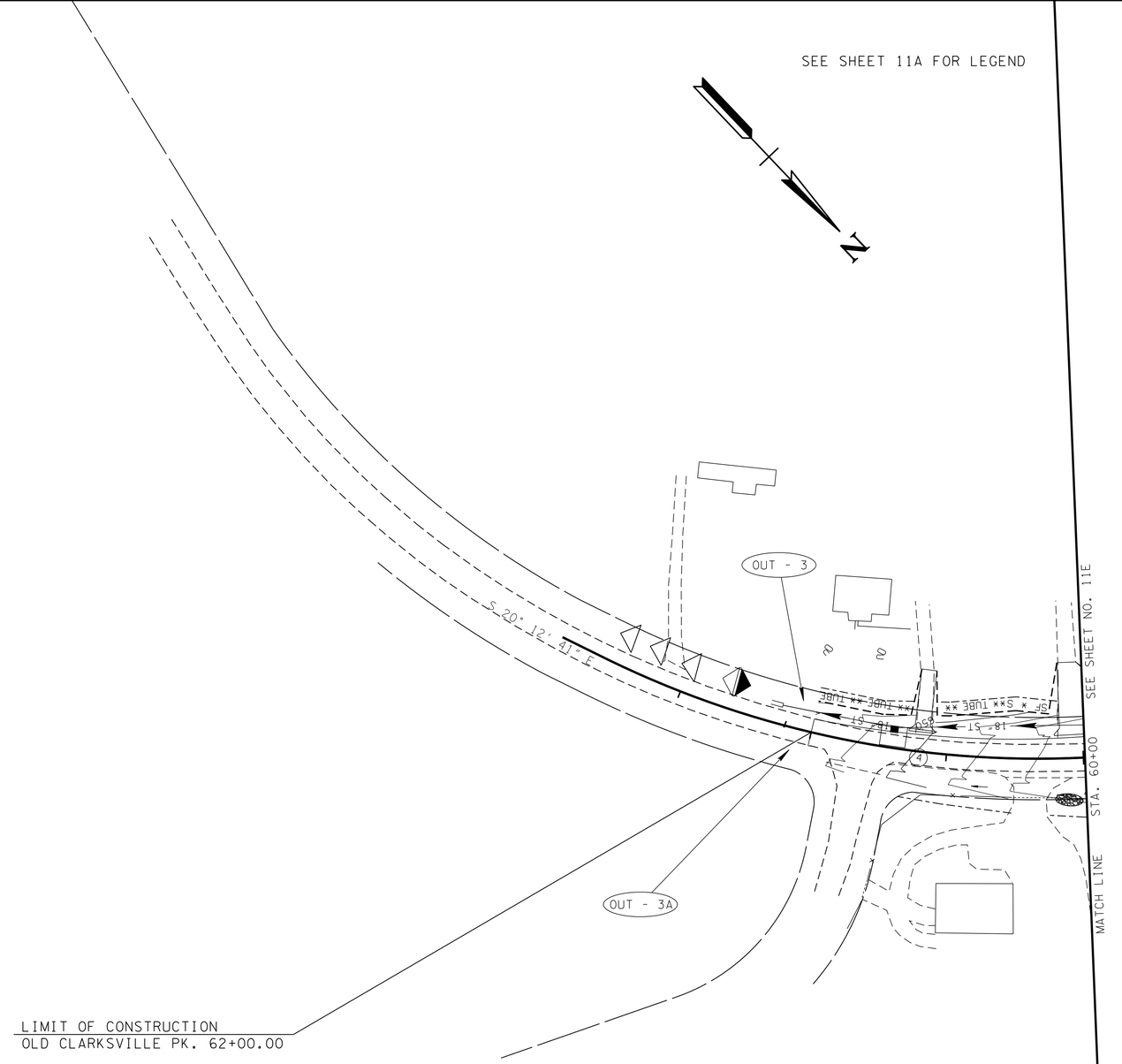

09

OUTFALL DATA
OUTFALLS 3 & 3A: STORM WATER FROM THESE OUTFALLS DISCHARGE FROM THE CONSTRUCTION SITE BY MEANS OF PIPES INTO A DITCH. DRAINAGE AREA 0.60 ACRE, SLOPE 4.54%±.

UNOFFICIAL SET

NOT FOR BIDDING

SEALED BY

STATE OF TENNESSEE
DEPARTMENT OF TRANSPORTATION

EROSION PREVENTION AND SEDIMENT CONTROL PLAN

PHASE II

SCALE: 1"=50'

27-JAN-2014 10:12
\\JJ03WF01.tdot.state.tn.us\03Shared\SURVEY\DESIGN\PIN 107847.00 Cheatham Co SR 49\011H.SHT

TENNESSEE D.O.T.
DESIGN DIVISION
FILE NO.

TYPE	YEAR	PROJECT NO.	SHEET NO.
R.O.W.	2012	STP-49(26)	11H
CONST.	2014	STP-49(26)	11I

SEE SHEET 11A FOR LEGEND

10

15

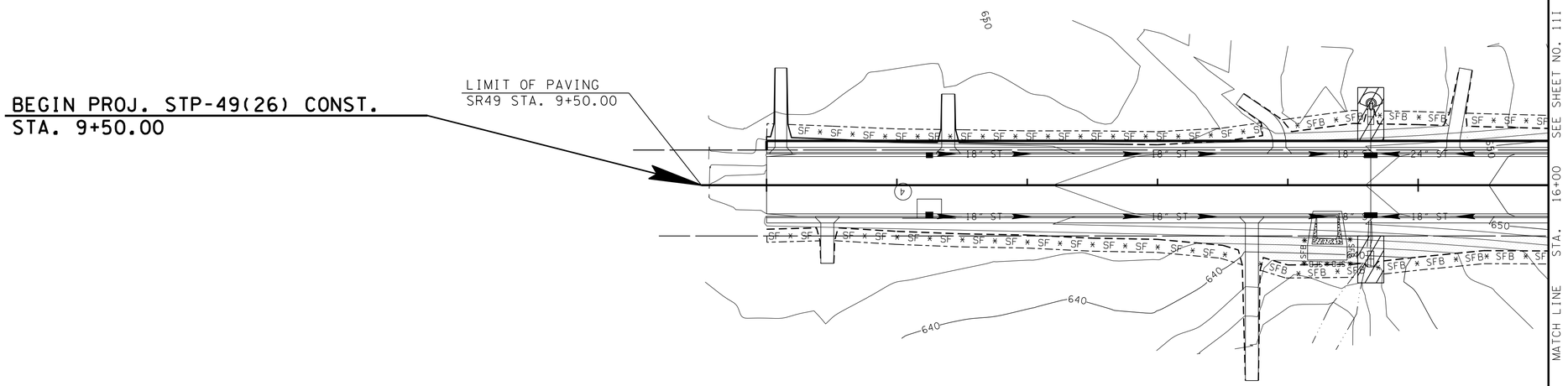

TCB	TEMPORARY CONSTRUCTION EXIT TO BE LOCATED BY THE ENGINEER

UNOFFICIAL SET

NOT FOR BIDDING

SEALED BY

STATE OF TENNESSEE
DEPARTMENT OF TRANSPORTATION

EROSION PREVENTION AND SEDIMENT CONTROL PLAN

PHASE III

SCALE: 1"=50'

27-JAN-2014 10:12
\\JU03WF01.tdot.state.tn.us\03Shared\SURVEY\DESIGN\PIN 107847.00 Cheatham Co SR 49\Oil.SHT

TENNESSEE D.O.T.
DESIGN DIVISION
FILE NO.

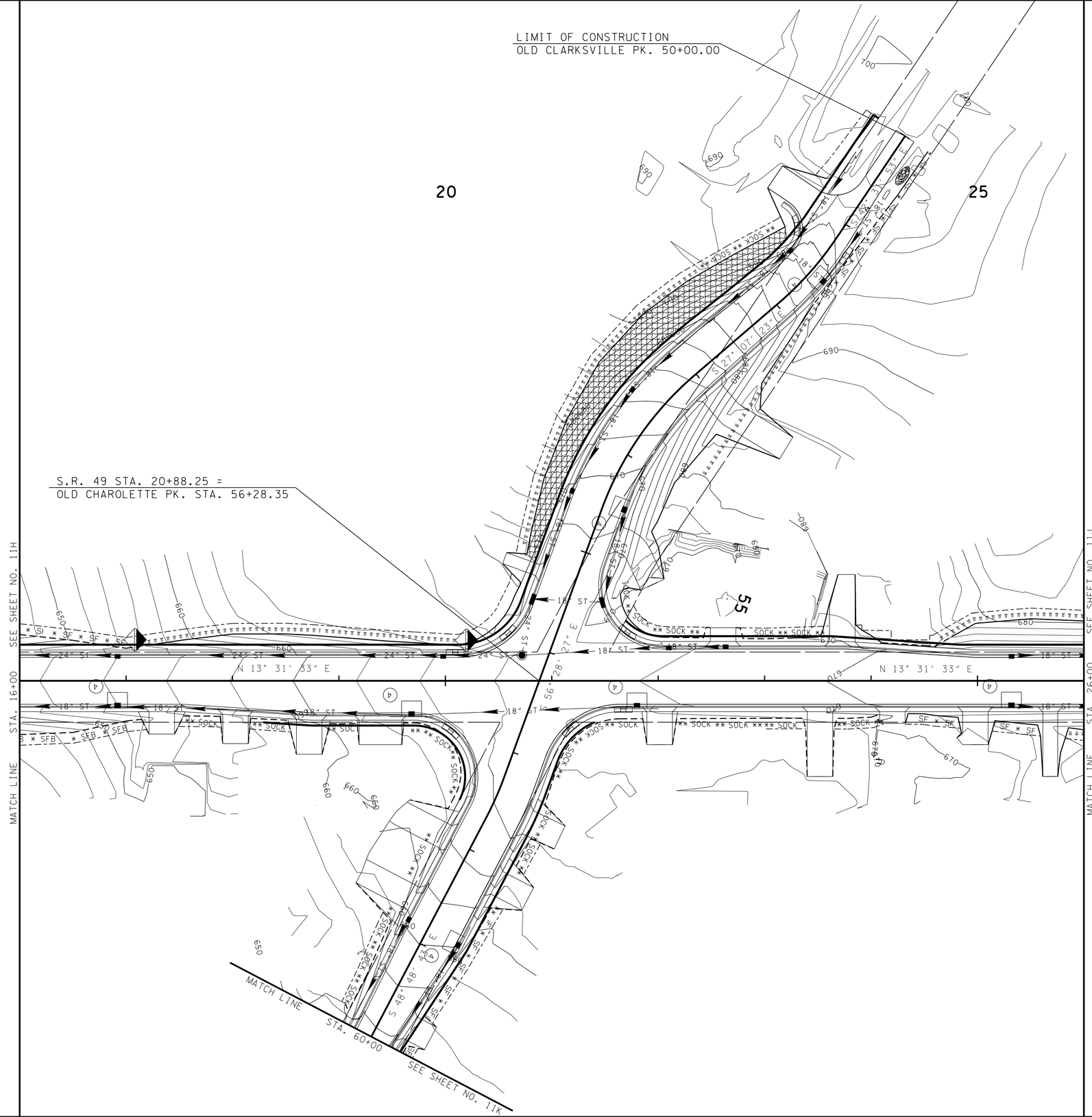

SEE SHEET 11A FOR LEGEND

TYPE	YEAR	PROJECT NO.	SHEET NO.
R.O.W.	2012	STP-49(26)	11I
CONST.	2014	STP-49(26)	11J

REV. 07-08-13: RELOCATED PVT. DRS. STA. 17+33.51 AND 18+72.08. ADDED PVT. DR. STA. 18+02.79. DELETED PVT. DR. 22+85. ADJUSTED SLOPES, EASEMENT AND EROSION CONTROL DEVICES.

UNOFFICIAL SET

NOT FOR BIDDING

SEALED BY

STATE OF TENNESSEE
DEPARTMENT OF TRANSPORTATION

EROSION PREVENTION AND SEDIMENT CONTROL PLAN

PHASE III

SCALE: 1"=50'

27-JAN-2014 10:12
\\J03WF01.tdot.state.tn.us\03Shared\SURVEY\DESIGN\PIN 107847.00 Cheatham Co SR 49\011J.SHT

TENNESSEE D.O.T.
DESIGN DIVISION
FILE NO.

TYPE	YEAR	PROJECT NO.	SHEET NO.
R.O.W.	2012	STP-49(26)	11J
CONST.	2014	STP-49(26)	11K

SEE SHEET 11A FOR LEGEND

30

50

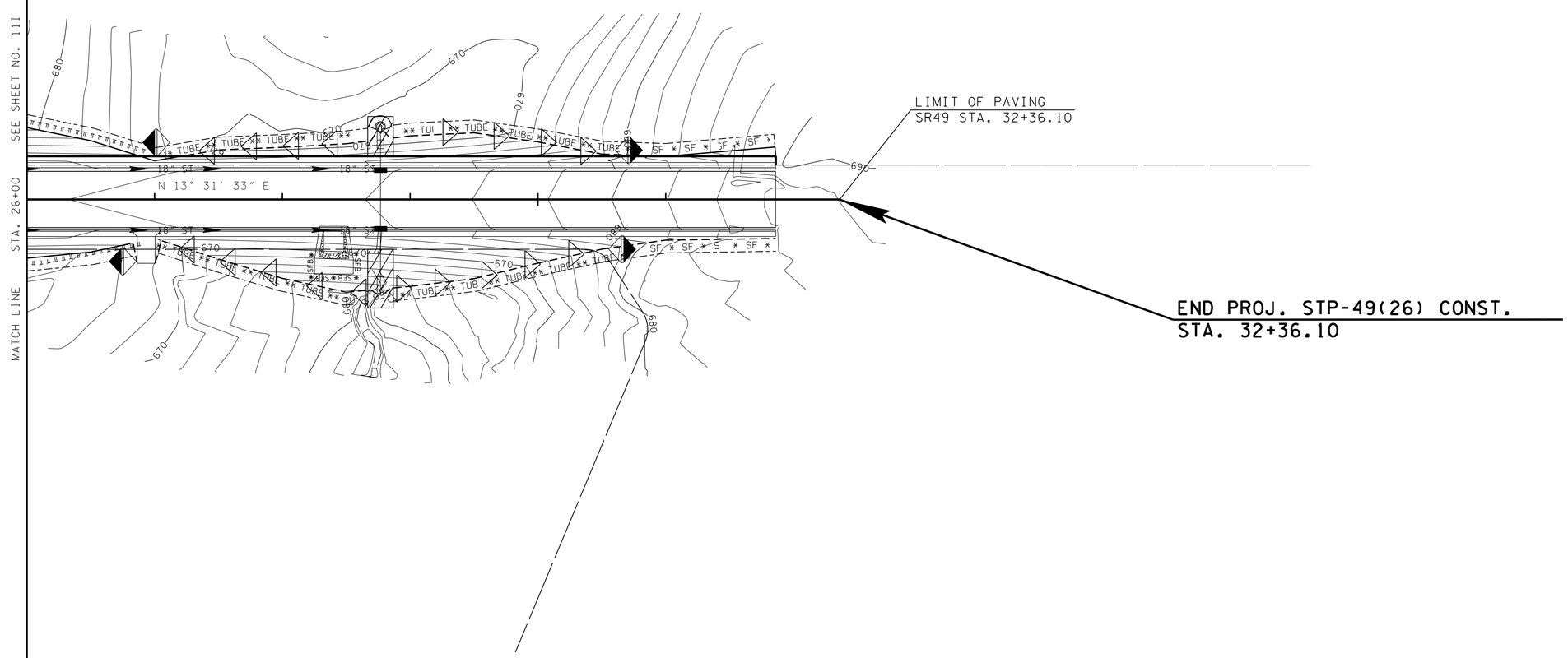

TCE — TEMPORARY CONSTRUCTION EXIT TO BE LOCATED BY THE ENGINEER

UNOFFICIAL SET

NOT FOR BIDDING

SEALED BY

STATE OF TENNESSEE
DEPARTMENT OF TRANSPORTATION

EROSION PREVENTION AND SEDIMENT CONTROL PLAN

PHASE III

SCALE: 1"=50'

27-JAN-2014 10:12
\\JJ03WF01.tdot.state.tn.us\03Shared\SURVEY\DESIGN\PIN 107847.00 Cheatham Co SR 49\OIK.SHT

TENNESSEE D.O.T.
DESIGN DIVISION
FILE NO.

TYPE	YEAR	PROJECT NO.	SHEET NO.
R.O.W.	2012	STP-49(26)	11K
CONST.	2014	STP-49(26)	11L

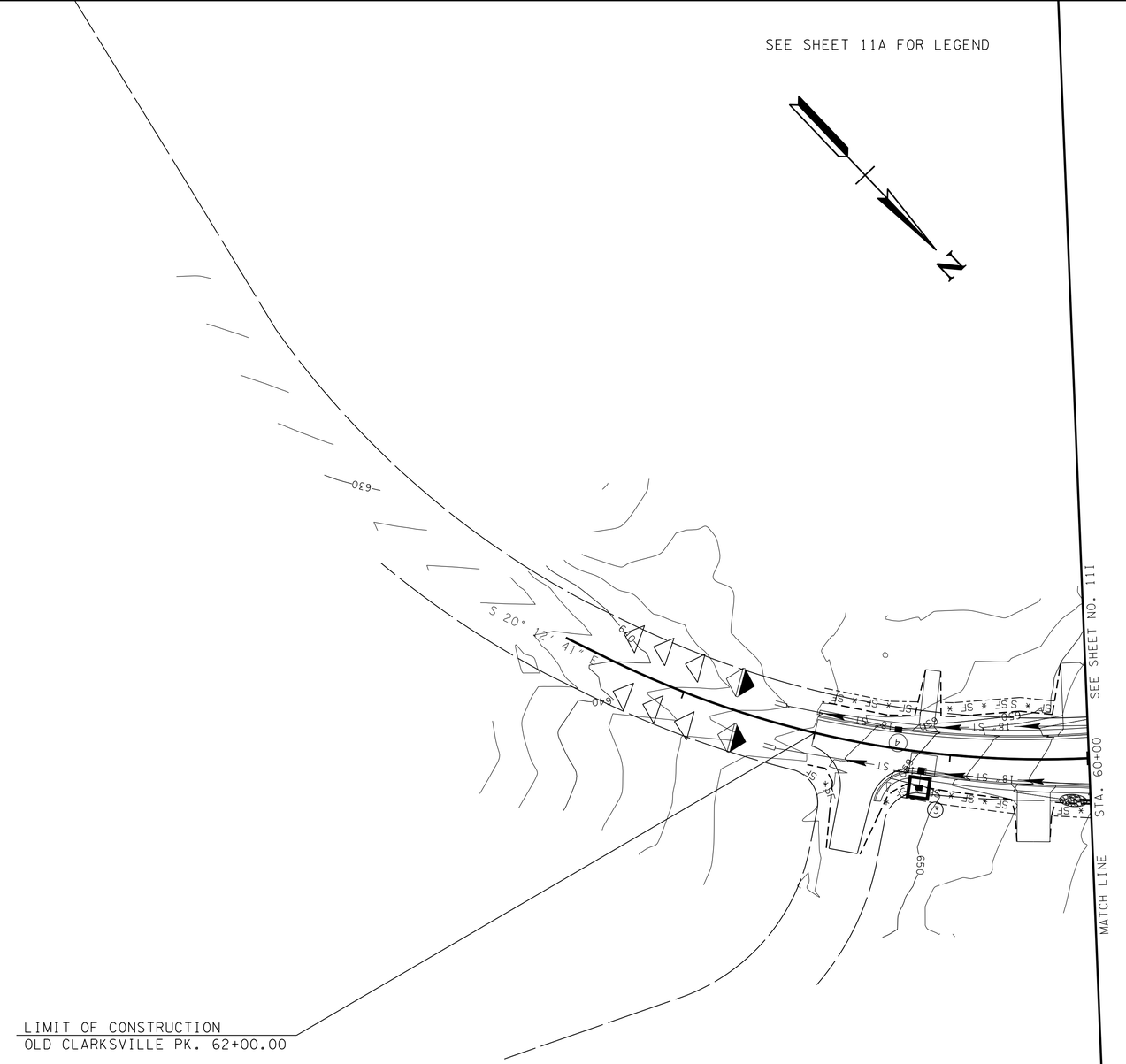

09

UNOFFICIAL SET

NOT FOR BIDDING

SEALED BY

STATE OF TENNESSEE
DEPARTMENT OF TRANSPORTATION

EROSION PREVENTION AND SEDIMENT CONTROL PLAN

PHASE III

SCALE: 1"=50'

27-JAN-2014 10:12
\\JJ03WF01.tdot.state.tn.us\03Shared\SURVEY\DESIGN\PIN 107847.00 Cheatham Co SR 49\011L.SHT

TENNESSEE D.O.T.
DESIGN DIVISION
FILE NO.

TYPE	YEAR	PROJECT NO.	SHEET NO.
R.O.W.	2012	STP-49(26)	12
CONST.	2014	STP-49(26)	12

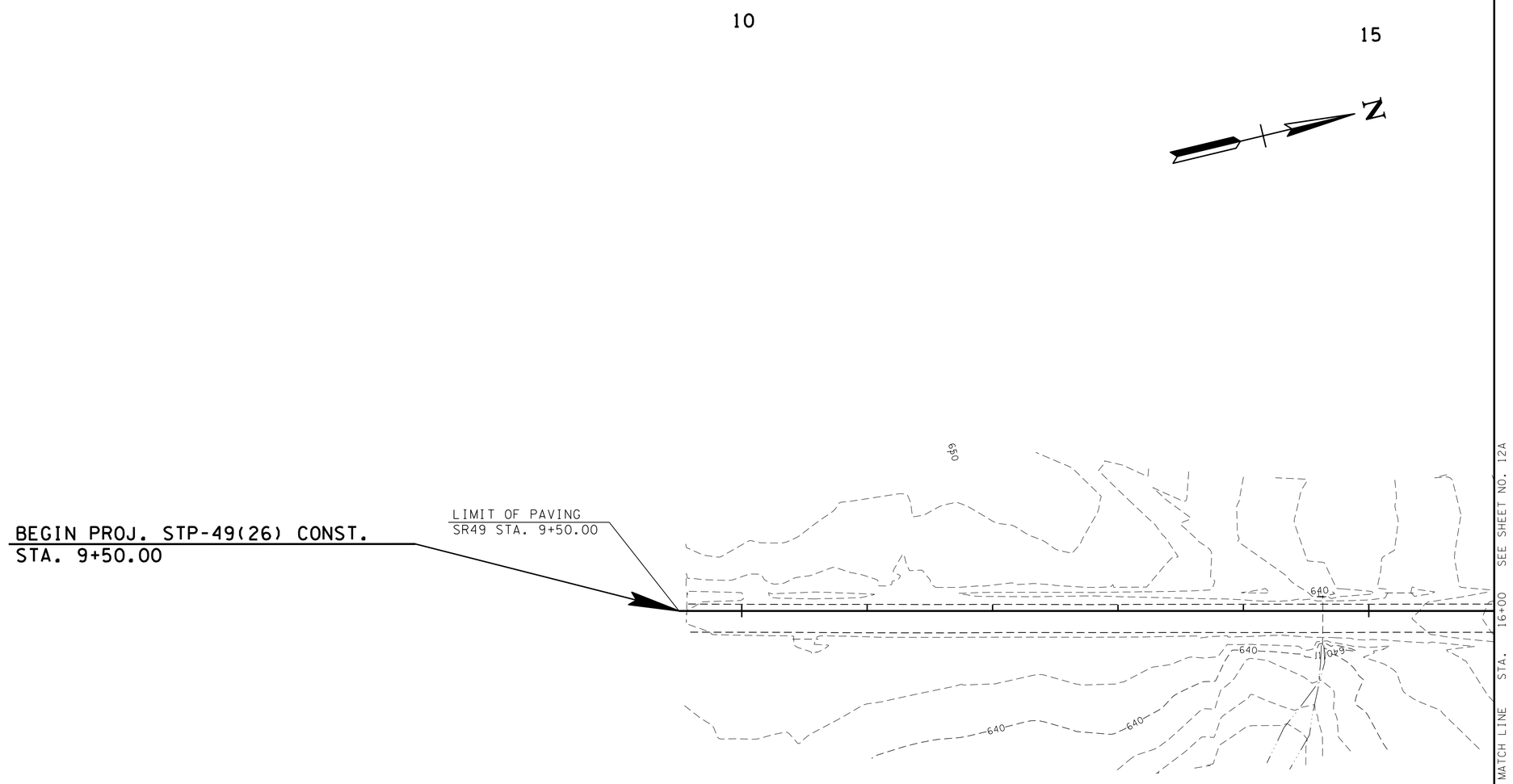

UNOFFICIAL SET

NOT FOR BIDDING

SEALED BY

JOHN J. LANGE
REGISTERED ENGINEER
AGRICULTURE
COMMERCE
NO. 106017
STATE OF TENNESSEE

STATE OF TENNESSEE
DEPARTMENT OF TRANSPORTATION

EXISTING CONTOURS

STA. 10+00 TO STA. 16+00

SCALE: 1"=50'

27-JAN-2014 10:12
\\J03WF01.tdot.state.tn.us\03Shared\SURVEY\DESIGN\PIN 107847.00 Cheatham Co SR 49\012.SHT

TENNESSEE D.O.T.
DESIGN DIVISION
FILE NO.

TYPE	YEAR	PROJECT NO.	SHEET NO.
R.O.W.	2012	STP-49(26)	12A
CONST.	2014	STP-49(26)	12A

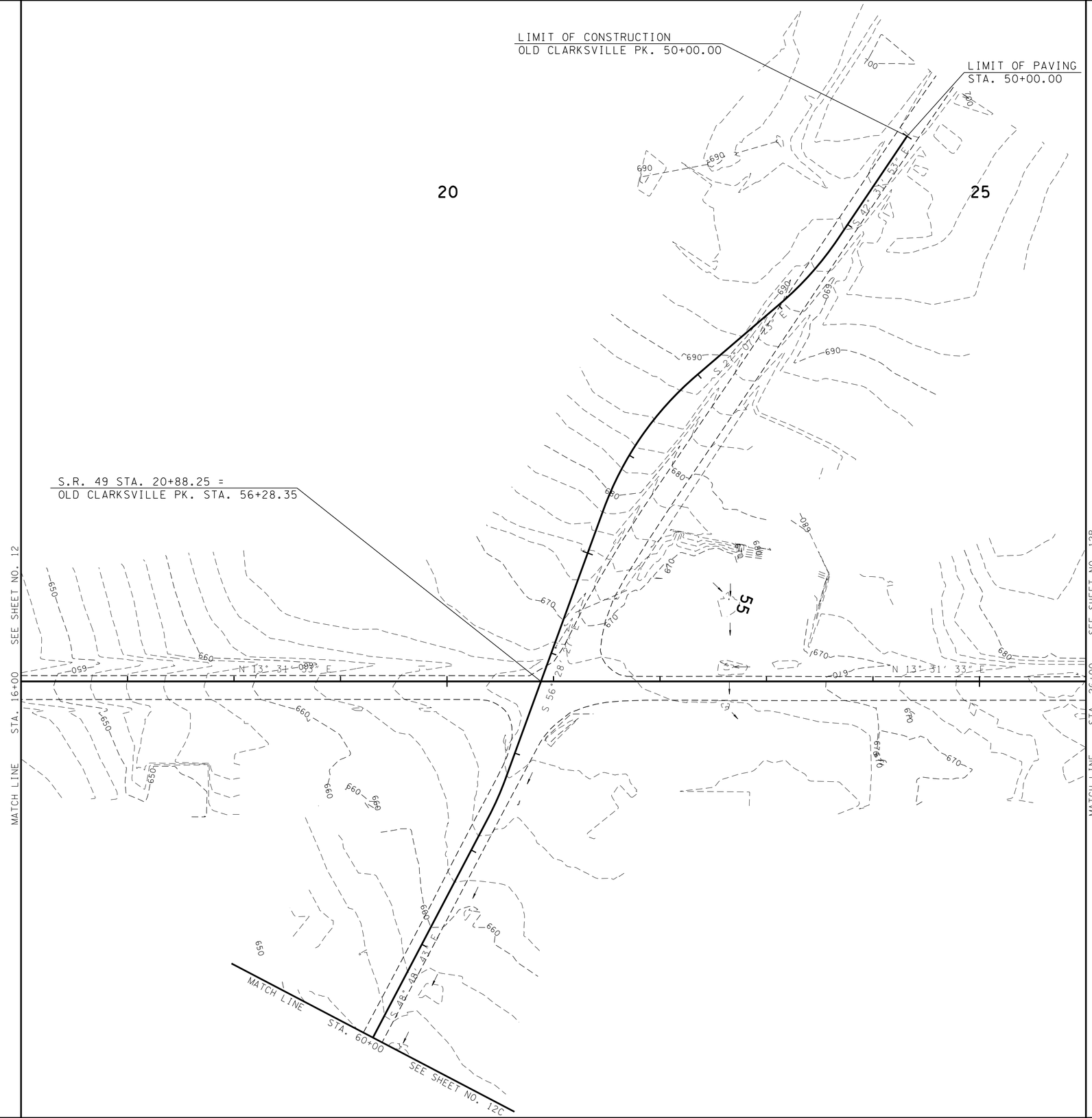

UNOFFICIAL SET

NOT FOR BIDDING

SEALED BY

JOHN J. LANCE
REGISTERED ENGINEER
AGRICULTURE
COMMERCE
NO. 106017
STATE OF TENNESSEE

STATE OF TENNESSEE
DEPARTMENT OF TRANSPORTATION

EXISTING CONTOURS

STA. 16+00 TO STA. 26+00

SCALE: 1"=50'

27-JAN-2014 10:12
\\JJ03WF01.tdot.state.tn.us\03Shared\SURVEY\DESIGN\PIN 107847.00 Cheatham Co SR 49\012A.SHT

TYPE	YEAR	PROJECT NO.	SHEET NO.
R.O.W.	2012	STP-49(26)	12B
CONST.	2014	STP-49(26)	12B

TENNESSEE D.O.T.
DESIGN DIVISION
FILE NO.

30

50

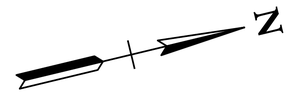

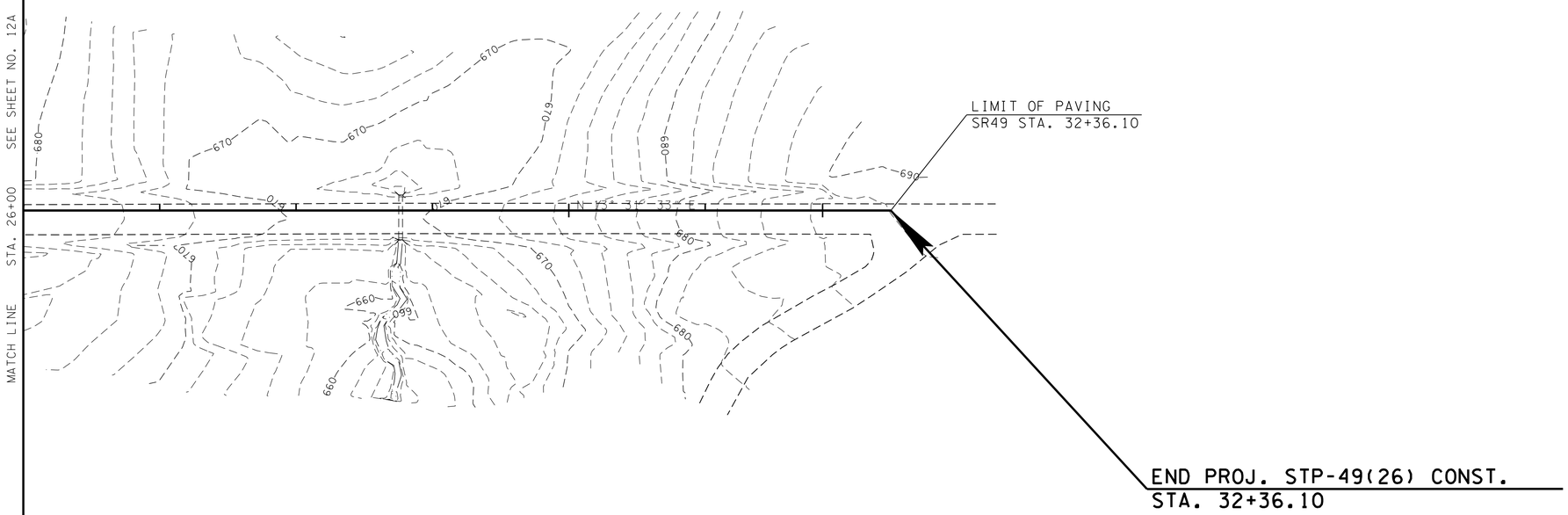

UNOFFICIAL SET

NOT FOR BIDDING

SEALED BY

STATE OF TENNESSEE
DEPARTMENT OF TRANSPORTATION

EXISTING CONTOURS

STA.26+00 TO STA.31+86.10

SCALE: 1"=50'

27-JAN-2014 10:12
\\JU03WF01.tdot.state.tn.us\03Shared\SURVEY\DESIGN\PIN 107847.00 Cheatham Co SR 49\012B.SHT

TENNESSEE D.O.T.
DESIGN DIVISION
FILE NO.

TYPE	YEAR	PROJECT NO.	SHEET NO.
R.O.W.	2012	STP-49(26)	12C
CONST.	2014	STP-49(26)	12C

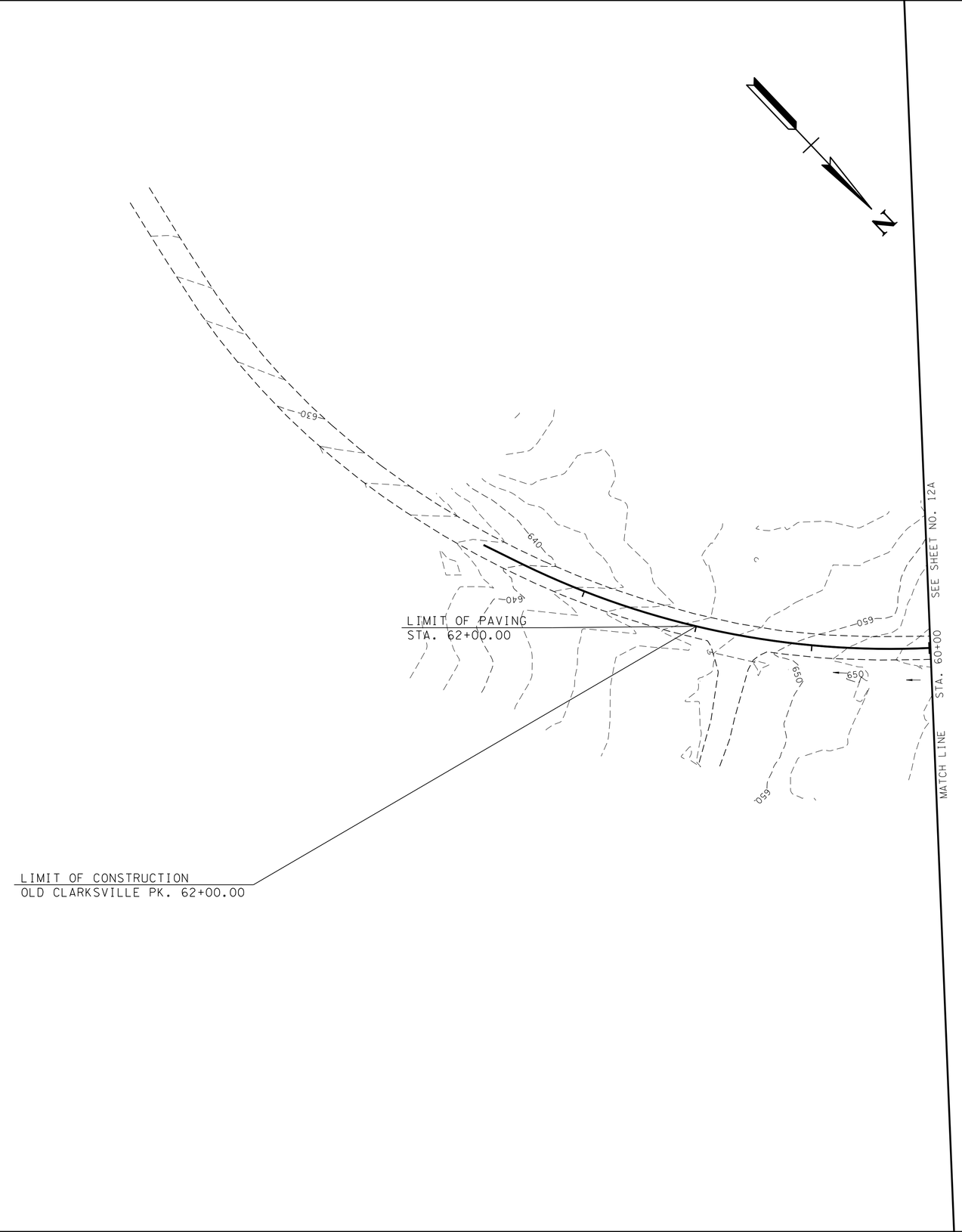

UNOFFICIAL SET

NOT FOR BIDDING

SEALED BY

STATE OF TENNESSEE
DEPARTMENT OF TRANSPORTATION

EXISTING CONTOURS

STA.60+00 TO STA.63+62.64

SCALE: 1"=50'

27-JAN-2014 10:12
\\JJ03WF01.tdot.state.tn.us\03Shared\SURVEY\DESIGN\PIN 107847.00 Cheatham Co SR 49\012C.SHT

TENNESSEE D.O.T.
DESIGN DIVISION
FILE NO.

TYPE	YEAR	PROJECT NO.	SHEET NO.
R.O.W.	2012	STP-49(26)	13
CONST.	2014	STP-49(26)	13

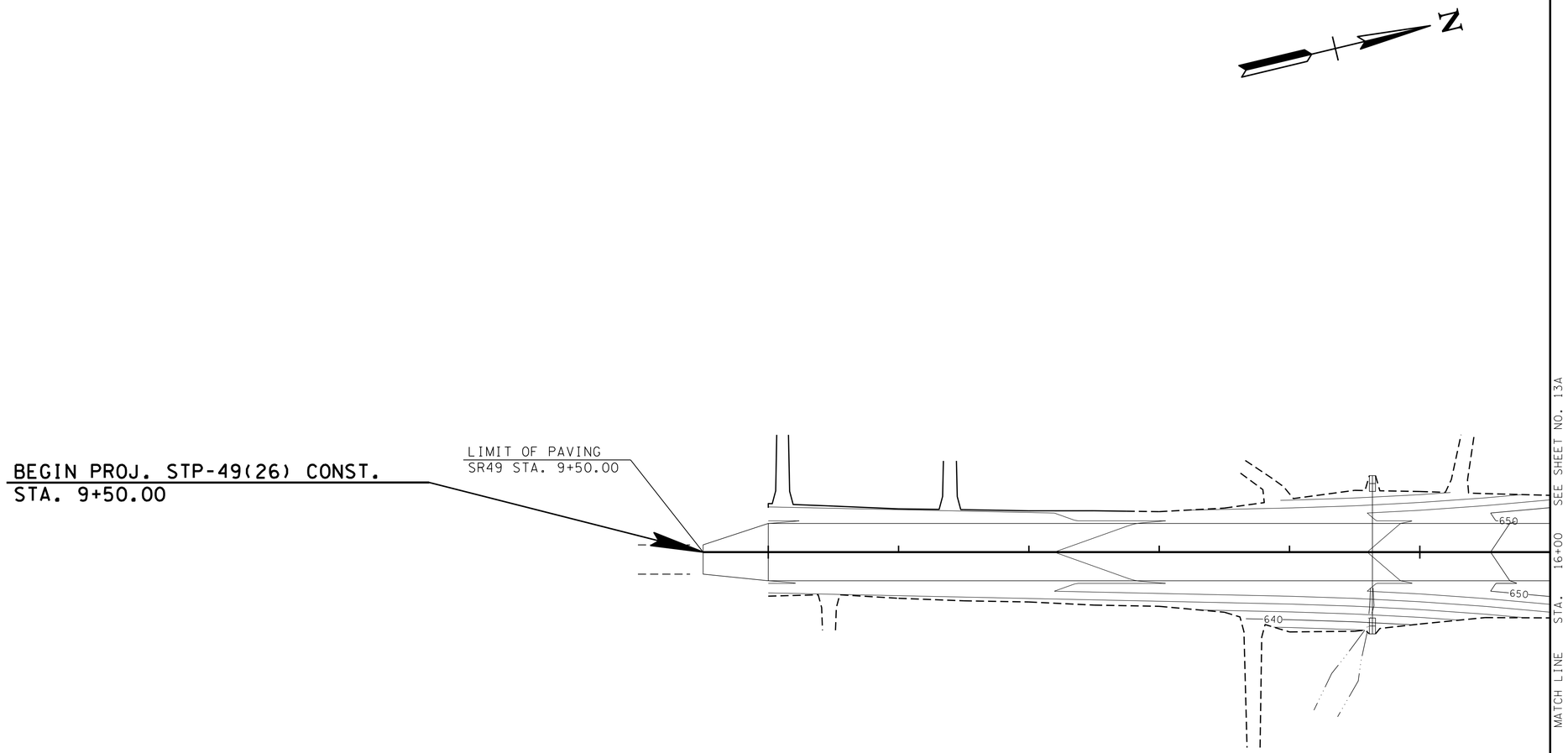

UNOFFICIAL SET

NOT FOR BIDDING

SEALED BY

STATE OF TENNESSEE
DEPARTMENT OF TRANSPORTATION

PROPOSED CONTOURS

STA. 10+00 TO STA. 16+00

SCALE: 1"=50'

27-JAN-2014 10:12
\\JU03WF01.tdot.state.tn.us\03Shared\SURVEY\DESIGN\PIN 107847.00 Cheatham Co SR 49\013.SHT

TENNESSEE D.O.T.
DESIGN DIVISION
FILE NO.

TYPE	YEAR	PROJECT NO.	SHEET NO.
R.O.W.	2012	STP-49(26)	13A
CONST.	2014	STP-49(26)	13A

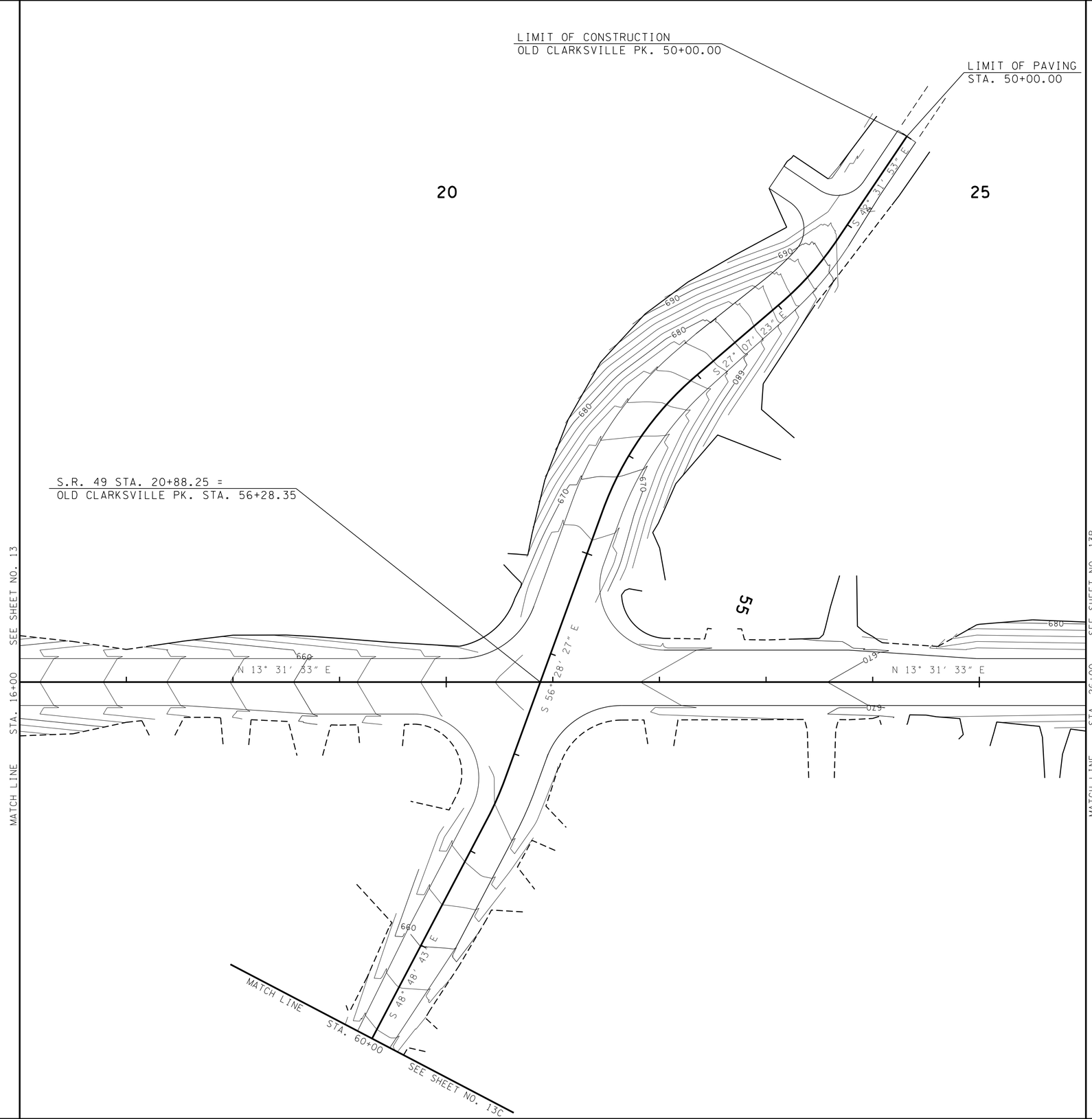

UNOFFICIAL SET

NOT FOR BIDDING

SEALED BY

STATE OF TENNESSEE
DEPARTMENT OF TRANSPORTATION

PROPOSED CONTOURS

STA. 16+00 TO STA. 26+00

SCALE: 1"=50'

27-JAN-2014 10:12
\\JJO3WF01.tdot.state.tn.us\03Shared\SURVEY\DESIGN\PIN 107847.00 Cheatham Co SR 49\013A.SHT

TENNESSEE D.O.T.
DESIGN DIVISION
FILE NO.

TYPE	YEAR	PROJECT NO.	SHEET NO.
R.O.W.	2012	STP-49(26)	13B
CONST.	2014	STP-49(26)	13B

30

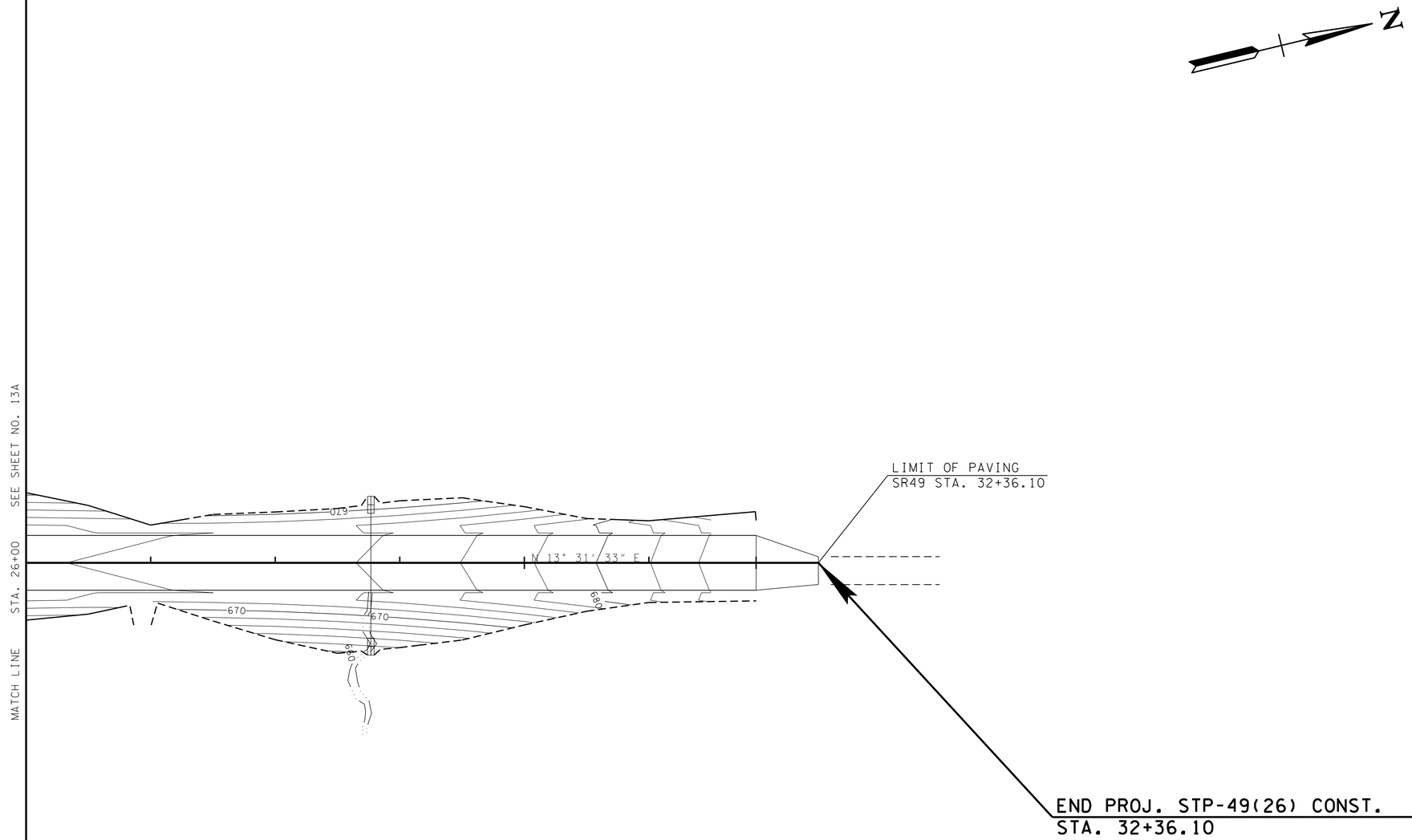

UNOFFICIAL SET

NOT FOR BIDDING

SEALED BY

STATE OF TENNESSEE
DEPARTMENT OF TRANSPORTATION

PROPOSED CONTOURS

STA.26+00 TO STA.31+86.10

SCALE: 1"=50'

27-JAN-2014 10:12
\\JU03WF01.tdot.state.tn.us\03Shared\SURVEY\DESIGN\PIN 107847.00 Cheatham Co SR 49\013B.SHT

TYPE	YEAR	PROJECT NO.	SHEET NO.
R.O.W.	2012	STP-49(26)	13C
CONST.	2014	STP-49(26)	13C

TENNESSEE D.O.T.
DESIGN DIVISION
FILE NO.

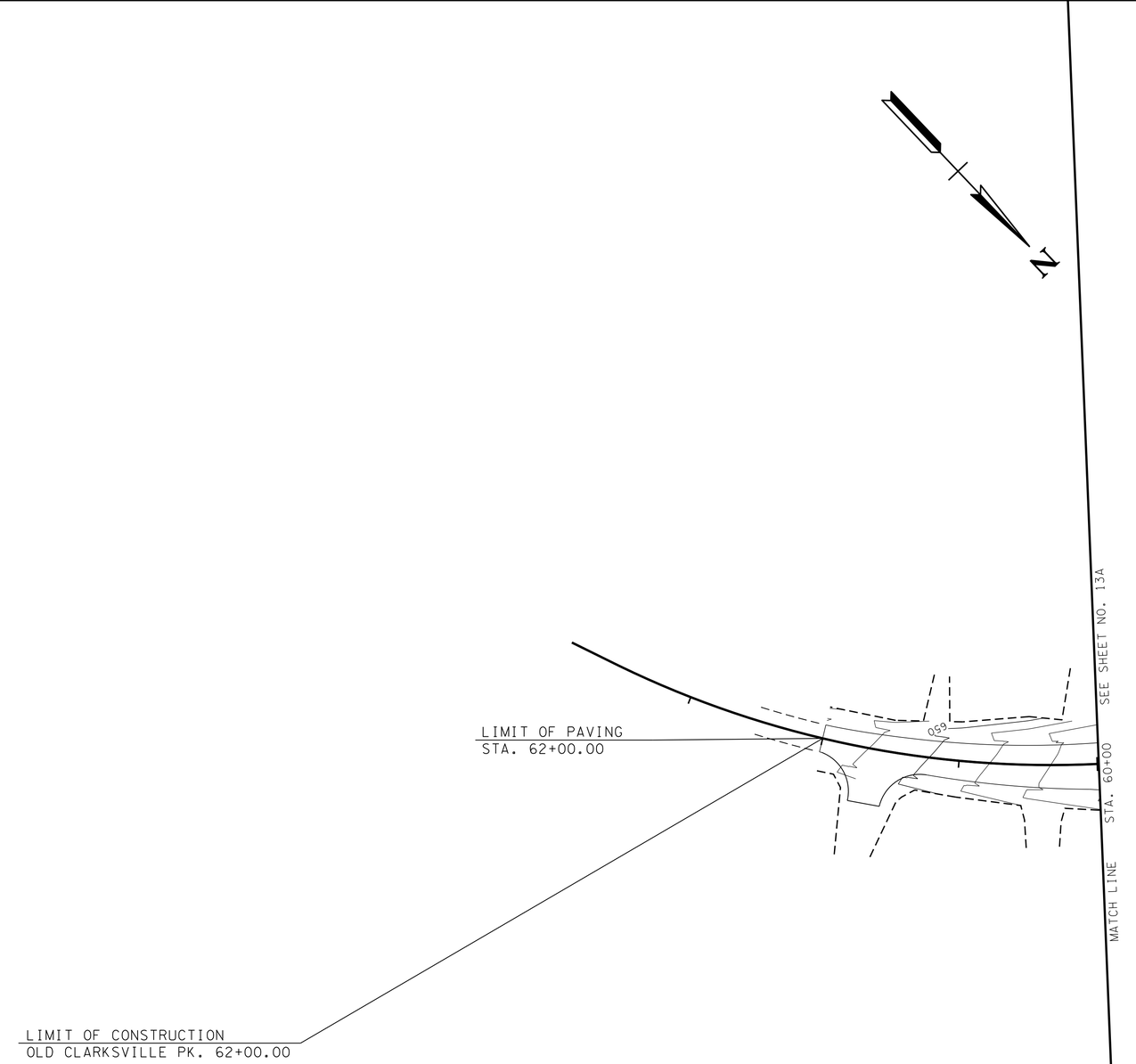

UNOFFICIAL SET

NOT FOR BIDDING

SEALED BY

STATE OF TENNESSEE
DEPARTMENT OF TRANSPORTATION

PROPOSED CONTOURS

STA.60+00 TO STA.63+62.64

SCALE: 1"=50'

27-JAN-2014 10:12
\\JJ03WF01.tdot.state.tn.us\03Shared\SURVEY\DESIGN\PIN 107847.00 Cheatham Co SR 49\013C.SHT

TYPE	YEAR	PROJECT NO.	SHEET NO.
CONST.	2014	STP-49(26)	14

TENNESSEE D.O.T.
DESIGN DIVISION
FILE NO.

PAVEMENT EDGE DROP-OFF TRAFFIC CONTROL NOTES

A. DIFFERENCES IN ELEVATION BETWEEN ADJACENT TRAFFIC LANES OR TRAFFIC LANE AND SHOULDER WHERE THE TRAFFIC LANE IS BEING USED BY TRAFFIC, CAUSED BY BASE, PAVING OR RESURFACING:

1. DIFFERENCES IN ELEVATION BETWEEN ADJACENT ROADWAY ELEMENTS GREATER THAN 0.75 INCH AND NOT EXCEEDING 2 INCHES:

a. WARNING SIGNS, UNEVEN LANES (W8-11) AND/OR SHOULDER DROP-OFF WITH PLAQUE (W8-17 AND W8-17P), SHALL BE PLACED IN ADVANCE OF AND THROUGHOUT THE EXPOSED AREA. MAXIMUM SPACING BETWEEN SIGNS SHALL BE 2,000 FEET WITH A MINIMUM OF 2 SIGNS PER EXPOSED AREA. WHERE UNEVEN PAVEMENT IS ENCOUNTERED, SIGNS SHALL BE PLACED ON EACH SIDE OF THE ROADWAY.

b. DIFFERENCES IN ELEVATION BETWEEN ADJACENT TRAFFIC LANES BEING UTILIZED BY TRAFFIC CAUSED BY ADDED PAVEMENT SHALL BE ELIMINATED WITHIN THREE WORKDAYS.

c. DIFFERENCES IN ELEVATION BETWEEN ADJACENT TRAFFIC LANES BEING UTILIZED BY TRAFFIC CAUSED BY COLD PLANING SHALL BE ELIMINATED WITHIN THREE WORKDAYS.

d. WHEN THE DIFFERENCE IN ELEVATION IS BETWEEN THE TRAFFIC LANE BEING UTILIZED BY TRAFFIC AND SHOULDER THE DIFFERENCE IN ELEVATION SHALL BE ELIMINATED WITHIN SEVEN WORKDAYS AFTER THE CONDITION IS CREATED.

2. DIFFERENCES IN ELEVATION BETWEEN ADJACENT ROADWAY ELEMENTS GREATER THAN 2 INCHES AND NOT EXCEEDING 6 INCHES. TRAFFIC IS NOT TO BE ALLOWED TO TRAVERSE THIS DIFFERENCE IN ELEVATION.

a. SEPARATION SHALL BE ACCOMPLISHED BY DRUMS, BARRICADES OR OTHER APPROVED DEVICES IN ACCORDANCE WITH THE FOLLOWING:

(1) WHERE POSTED SPEEDS ARE 50 MPH OR GREATER, SPACING OF THE PROTECTIVE DEVICES SHALL NOT EXCEED 100 FEET.

(2) WHERE POSTED SPEEDS ARE LESS THAN 50 MPH, THE MAXIMUM SPACING OF THE PROTECTIVE DEVICES IN FEET SHALL NOT EXCEED TWICE THE POSTED SPEED IN MILES PER HOUR OR 50 FEET, WHICHEVER SPACING IS GREATER.

b. IF THE DIFFERENCE IN ELEVATION IS ELIMINATED OR DECREASED TO 2 INCHES OR LESS BY THE END OF EACH WORKDAY, CONES MAY BE USED DURING DAYLIGHT HOURS IN LIEU OF DRUMS, BARRICADES OR OTHER APPROVED PROTECTIVE DEVICES MENTIONED IN PARAGRAPH a, PROVIDED WARNING SIGNS ARE ERECTED. WARNING SIGNS (UNEVEN LANES AND/OR SHOULDER DROP-OFF) SHALL BE PLACED IN ADVANCE OF AND THROUGHOUT THE EXPOSED AREA. MAXIMUM SPACING BETWEEN SIGNS SHALL BE 2,000 FEET WITH A MINIMUM OF 2 SIGNS PER EXPOSED AREA. WHERE UNEVEN PAVEMENT IS ENCOUNTERED, SIGNS SHALL BE PLACED ON EACH SIDE OF THE ROADWAY.

c. WHEN THE DIFFERENCE IN ELEVATION IS BETWEEN THE THROUGH TRAFFIC LANE AND THE SHOULDER AND THE ELEVATION DIFFERENCE IS LESS THAN 3.5 INCHES, THE CONTRACTOR MAY USE WARNING SIGNS AND/OR PROTECTIVE DEVICES AS APPLICABLE AND APPROVED BY THE ENGINEER. SEE PARAGRAPH a REGARDING USE OF DRUMS, BARRICADES OR OTHER APPROVED PROTECTIVE DEVICES. WARNING SIGNS (UNEVEN LANES AND/OR SHOULDER DROP-OFF) WILL BE PLACED IN ADVANCE OF AND THROUGHOUT THE EXPOSED AREA. MAXIMUM SPACING BETWEEN SIGNS SHALL BE 2,000 FEET WITH A MINIMUM OF 2 SIGNS PER EXPOSED AREA. WHERE UNEVEN PAVEMENT IS ENCOUNTERED, SIGNS SHALL BE PLACED ON EACH SIDE OF THE ROADWAY.

IN THESE SITUATIONS, THE CONTRACTOR SHALL LIMIT HIS OPERATIONS TO ONE WORK ZONE NOT EXCEEDING 2 MILES IN LENGTH UNLESS OTHERWISE NOTED ON THE PLANS OR APPROVED BY THE ENGINEER. ONCE THE CONTRACTOR BEGINS WORK IN A WORK ZONE, A CONTINUOUS OPERATION SHALL BE MAINTAINED UNTIL THE DIFFERENCE IN ELEVATION IS ELIMINATED. SIMULTANEOUS WORK ON SEPARATE ROADWAYS OF DIVIDED HIGHWAYS WILL BE CONSIDERED INDEPENDENTLY IN REGARD TO RESTRICTION OF WORK ZONE ACTIVITY.

3. DIFFERENCES IN ELEVATION BETWEEN ADJACENT ROADWAY ELEMENTS GREATER THAN 6 INCHES BUT NOT EXCEEDING 18 INCHES, THE CONTRACTOR, WITH THE ENGINEER'S APPROVAL, MAY UTILIZE ONE OF THE FOLLOWING:

a. THE CONTRACTOR SHALL ACCOMPLISH SEPARATION BY DRUMS, BARRICADES OR OTHER APPROVED DEVICES IN ACCORDANCE WITH THE FOLLOWING:

(1) WHERE POSTED SPEEDS ARE 50 MPH OR GREATER, SPACING OF THE PROTECTIVE DEVICES SHALL NOT EXCEED 100 FEET.

(2) WHERE POSTED SPEEDS ARE LESS THAN 50 MPH, THE MAXIMUM SPACING OF THE PROTECTIVE DEVICES IN FEET SHALL NOT EXCEED TWICE THE POSTED SPEED IN MILES PER HOUR OR 50 FEET, WHICHEVER SPACING IS GREATER.

IN ORDER TO USE THIS METHOD, THE CONTRACTOR MUST REDUCE THE DIFFERENCE IN ELEVATION TO 6 INCHES OR LESS BY THE END OF THE WORKDAY THAT THE CONDITION IS CREATED.

b. THE CONTRACTOR SHALL PROVIDE DRUMS, BARRICADES OR OTHER APPROVED SEPARATION DEVICES AS SPECIFIED IN PARAGRAPH a, AND CONSTRUCT A STONE WEDGE WITH A 4:1 SLOPE, OR FLATTER, TO ELIMINATE THE VERTICAL OFFSET IF THE LOWER ELEVATION IS AT OR BELOW SUBGRADE AT THE END OF EACH DAY.

c. THE CONTRACTOR SHALL PROVIDE DRUMS, BARRICADES OR OTHER APPROVED SEPARATION DEVICES AS SPECIFIED IN PARAGRAPH a AND IF THE LOWER ELEVATION IS BASE STONE OR ASPHALT PAVEMENT, PLACEMENT OF SUBSEQUENT LAYERS OF PAVEMENT MUST BEGIN THE NEXT WORK DAY AND PROGRESS CONTINUOUSLY UNTIL THE DIFFERENCE IN ELEVATION IS ELIMINATED OR REDUCED TO SIX INCHES OR LESS.

d. THE CONTRACTOR SHALL PROVIDE SEPARATION BY PORTABLE BARRIER RAIL.

FOR PRECEDING CONDITIONS a, b, AND c, THE CONTRACTOR SHALL USE THE SHOULDER DROP-OFF WARNING SIGN WITH PLAQUE (W8-17 AND W8-17P). IT SHALL BE PLACED IN ADVANCE OF AND THROUGHOUT THE EXPOSED AREA. MAXIMUM SPACING BETWEEN THE SIGNS SHALL BE 2,000 FEET WITH A MINIMUM OF 2 SIGNS PER EXPOSED AREA. IN THESE SITUATIONS, THE CONTRACTOR SHALL LIMIT HIS OPERATIONS TO ONE WORK ZONE NOT EXCEEDING 1 MILE IN LENGTH UNLESS OTHERWISE NOTED ON THE PLANS OR APPROVED BY THE ENGINEER. ONCE THE CONTRACTOR BEGINS WORK IN A WORK ZONE, A CONTINUOUS OPERATION SHALL BE MAINTAINED UNTIL THE DIFFERENCE IS ELIMINATED. SIMULTANEOUS WORK ON SEPARATE ROADWAYS OF DIVIDED HIGHWAYS WILL BE CONSIDERED INDEPENDENTLY IN REGARD TO RESTRICTION OF WORK ZONE ACTIVITY.

4. FOR DIFFERENCES IN ELEVATION BETWEEN ADJACENT ROADWAY ELEMENTS GREATER THAN 18 INCHES.

SEPARATION WILL BE PROVIDED BY USE OF PORTABLE BARRIER RAIL.

IN THIS SITUATION THE CONTRACTOR SHALL LIMIT HIS OPERATIONS TO ONE WORK ZONE NOT EXCEEDING 1 MILE IN LENGTH UNLESS OTHERWISE NOTED ON THE PLANS OR APPROVED BY THE ENGINEER. ONCE THE CONTRACTOR BEGINS WORK IN A WORK ZONE, A CONTINUOUS OPERATION SHALL BE MAINTAINED UNTIL THE DIFFERENCE IN ELEVATION IS ELIMINATED. SIMULTANEOUS WORK ON SEPARATE ROADWAYS OF DIVIDED HIGHWAYS WILL BE CONSIDERED INDEPENDENTLY IN REGARD TO RESTRICTION OF WORK ZONE ACTIVITY.

B. IF THE DIFFERENCE IN ELEVATION IS WITHIN 30 FEET OF THE NEAREST TRAFFIC LANE BEING USED BY TRAFFIC CAUSED BY GRADING, EXCAVATION FOR UTILITIES, DRAINAGE STRUCTURES, UNDERCUTTING, ETC.:

1. IF THE DIFFERENCE IN ELEVATION IS WITHIN 8 FEET OF THE NEAREST TRAFFIC LANE WITH DIFFERENCE IN ELEVATION GREATER THAN 3/4 INCH AND NOT EXCEEDING 2 INCHES.

WARNING SIGNS (UNEVEN LANES AND/OR SHOULDER DROP-OFF) SHALL BE PLACED IN ADVANCE OF AND THROUGHOUT THE EXPOSED AREA. MAXIMUM SPACING BETWEEN SIGNS SHALL BE 2,000 FEET WITH A MINIMUM OF 2 SIGNS PER EXPOSED AREA. WHERE UNEVEN PAVEMENT IS ENCOUNTERED, SIGNS SHALL BE PLACED ON EACH SIDE OF THE ROADWAY.

2. IF THE DIFFERENCE IN ELEVATION IS WITHIN 8 FEET OF THE NEAREST TRAFFIC LANE WITH DIFFERENCE IN ELEVATION GREATER THAN 2 INCHES AND NOT EXCEEDING 6 INCHES:

a. SEPARATION SHALL BE ACCOMPLISHED BY DRUMS, BARRICADES OR OTHER APPROVED DEVICES IN ACCORDANCE WITH THE FOLLOWING:

(1) WHERE POSTED SPEEDS ARE 50 MPH OR GREATER, SPACING OF THE PROTECTIVE DEVICES SHALL NOT EXCEED 100 FEET.

(2) WHERE POSTED SPEEDS ARE LESS THAN 50 MPH THE MAXIMUM SPACING OF THE PROTECTIVE DEVICES IN FEET SHALL NOT EXCEED TWICE THE POSTED SPEED IN MILES PER HOUR OR 50 FEET, WHICHEVER SPACING IS GREATER.

3. IF THE DIFFERENCE IN ELEVATION IS WITHIN 8 FEET OF THE NEAREST TRAFFIC LANE WITH DIFFERENCE IN ELEVATION GREATER THAN 6 INCHES:

a. SEPARATION SHALL BE ACCOMPLISHED BY DRUMS, BARRICADES OR OTHER APPROVED DEVICES IN ACCORDANCE WITH THE FOLLOWING:

(1) WHERE POSTED SPEEDS ARE 50 MPH OR GREATER, SPACING OF THE PROTECTIVE DEVICES SHALL NOT EXCEED 100 FEET.

(2) WHERE POSTED SPEEDS ARE LESS THAN 50 MPH THE MAXIMUM SPACING OF THE PROTECTIVE DEVICES IN FEET SHALL NOT EXCEED TWICE THE POSTED SPEED IN MILES PER HOUR OR 50 FEET, WHICHEVER SPACING IS GREATER.

b. ELIMINATE VERTICAL OFFSET BY CONSTRUCTING A STONE WEDGE OR GRADING TO A 4:1 SLOPE, OR FLATTER, OR USE PORTABLE BARRIER RAIL.

THE CONTRACTOR SHALL SCHEDULE THE WORK SO AS TO MINIMIZE THE TIME TRAFFIC IS EXPOSED TO AN ELEVATION DIFFERENCE. ONCE THE CONTRACTOR BEGINS AN ACTIVITY THAT CREATES AN ELEVATION DIFFERENCE WITHIN 8 FEET OF A TRAFFIC LANE, THE ACTIVITY SHALL BE PURSUED AS A CONTINUOUS OPERATION UNTIL THE ELEVATION DIFFERENCE IS ELIMINATED.

C. IF THE DIFFERENCE IN ELEVATION IS FARTHER THAN 8 FEET FROM THE NEAREST TRAFFIC LANE BUT NOT MORE THAN 30 FEET FROM THE NEAREST TRAFFIC LANE:

SEPARATION SHALL BE ACCOMPLISHED BY DRUMS, BARRICADES OR OTHER APPROVED DEVICES IN ACCORDANCE WITH THE FOLLOWING:

1. WHERE POSTED SPEEDS ARE 50 MPH OR GREATER, SPACING OF THE PROTECTIVE DEVICES SHALL NOT EXCEED 100 FEET.

2. WHERE POSTED SPEEDS ARE LESS THAN 50 MPH, THE MAXIMUM SPACING OF THE PROTECTIVE DEVICES IN FEET SHALL NOT EXCEED TWICE THE POSTED SPEED IN MILES PER HOUR OR 50 FEET, WHICHEVER SPACING IS GREATER.

THE CONTRACTOR SHALL SCHEDULE THE WORK SO AS TO MINIMIZE THE TIME TRAFFIC IS EXPOSED TO AN ELEVATION DIFFERENCE. ONCE THE CONTRACTOR BEGINS AN ACTIVITY THAT CREATES AN ELEVATION DIFFERENCE, THE ACTIVITY SHALL BE PURSUED AS A CONTINUOUS OPERATION UNTIL THE ELEVATION DIFFERENCE IS ELIMINATED.

UNOFFICIAL SET

NOT FOR BIDDING

SEALED BY

STATE OF TENNESSEE
DEPARTMENT OF TRANSPORTATION

PAVEMENT EDGE DROP-OFF TRAFFIC CONTROL NOTES

27-JAN-2014 10:12
\\JJ03WF01.tdot.state.tn.us\03Shared\SURVEY\DESIGN\PIN 107847.00 Cheatham Co SR 49\014.SHT

TENNESSEE D.O.T.
DESIGN DIVISION
FILE NO.

TYPE	YEAR	PROJECT NO.	SHEET NO.
R.O.W.	2012	STP-49(26	14A
CONST.	2014	STP-49(26	14A

TRAFFIC CONTROL QUANTITIES

ITEM NO.	DESCRIPTION	UNIT	QUANTITY PHASE I	QUANTITY PHASE II	QUANTITY TOTAL	SIZE	M.U.T.C.D. NO.	REMARKS
705-08.51	PORTABLE IMPACT ATTENUATOR NCHRP350 TL-3	EACH	2	2	2			RELOCATED AS NEEDED
712-01	TRAFFIC CONTROL	LS	1	1	1			
712-02.02	INTERCONNECTED PORTABLE BARRIER RAIL	L.F.	528	846	846		6G.18	RELOCATED AS NEEDED
712-04.01	FLEXIBLE DRUMS (CHANNELIZING)	EACH	89	102	102		6F.62	RELOCATED AS NEEDED
712-05.01	WARNING LIGHTS (TYPE A)	EACH	6	6	6			
	G20-2 END ROAD WORK		2	2	2	48"X24"		
	W1-4R LANE SHIFT RIGHT		0	2	2	48"X48"		
	W1-4L LANE SHIFT LEFT		0	2	2	48"X48"		
	W-20 1 ROADWORK 1 MILE		2	2	2	48"X48"		
	W-20 1/2 ROADWORK 1 MILE		2	2	2	48"X48"		
	W-20 1 ROADWORK 1000 FEET		2	2	2	48"X48"		
	W-20 1 ROADWORK AHEAD		3	3	3	48"X48"		
	W20-7A FLAGGER		2	2	2	48"X48"		RELOCATED AS NEEDED
	W16-2 500 FEET		2	2	2	24"X18"		RELOCATED AS NEEDED
712-06	SIGNS (CONSTRUCTION)	S.F.	198	262	262			
712-07.03	TEMPORARY BARRICADES (TYPE III)	L.F.	48	48	48		6F.63	RELOCATED AS NEEDED
712-08.03	ARROW BOARD (TYPE C)	EACH	2	2	2		6F.56	RELOCATED AS NEEDED
712-09.01	REMOVABLE PAVEMENT MARKING LINE	L.F.	7012	7012	14024		6F.72	
712-09.02	REMOVABLE PAVEMENT MARKING (8" BARRIER LINE)	L.F.	628	5000	5628		6F.72	
713-16.01	CHANGEABLE MESSAGE SIGN UNIT	EACH	2	2	2			

QUANTITIES MAY BE INCREASED OR DECREASED AS DIRECTED BY THE ENGINEER.

PHASE IA

1. INSTALL ADVANCE WARNING SIGNS. SEE STD. DWG. T-WZ-10.
2. REINFORCE EXISTING SHOULDER WITH TEMPORARY PAVEMENT. SEE TYPICAL SECTION SHEET 14B.
3. CONSTRUCT EASTERN PORTION OF THE DRAINAGE SYSTEM AND TEMPORARY TRAVEL LANES.
4. CONSTRUCT LANE SHIFT.
5. USING A FLAGGER AND TEMPORARY PAVEMENT MARKING, DIVERT TRAFFIC ONTO TEMPORARY PAVEMENT.

PHASE IB

1. ERECT REMAINING PHASE I TRAFFIC CONTROL DEVICES.
2. CONSTRUCT LANE SHIFT.
3. USING A FLAGGER AND TEMPORARY PAVEMENT MARKING, DIVERT TRAFFIC ONTO NEW PAVEMENT.
4. CONSTRUCT WESTERN PORTION OF THE DRAINAGE SYSTEM AND TRAVEL LANES.
6. USING FLAGGERS STAGE CONSTRUCT SIDE ROADS. SEE STD. DWG. T-WZ-10 AND T-WZ-36.

PHASE II

1. ERECT PHASE II TRAFFIC CONTROL DEVICES.
2. USING TEMPORARY PAVEMENT AND MARKING, CONSTRUCT LANE SHIFTS.
3. SHIFT TRAFFIC FROM EXISTING TO PROPOSED PAVEMENT. SEE TYPICAL SECTION SHEET 14C.
4. USING STD. DWG. T-WZ-40, T-WZ-41 AND T-WZ-42 AS A GUIDE, CONSTRUCT INTERSECTION, REMAINING STORM SEWER AND TRAVEL LANES EAST OF THE CENTERLINE.
5. USING FLAGGERS, CONSTRUCT ANY REMAINING SIDE ROAD CONSTRUCTION.
6. AFTER CONSTRUCTION IS COMPLETE, USE FLAGGERS TO FINALIZE STRIPING AND RETURN TRAFFIC TO THE FINAL SURFACE.

TRAFFIC CONTROL LEGEND

SYMBOL	ITEM
	WORK ZONE
	FLEXIBLE DRUMS (CHANNELIZING)
	SIGN (CONSTRUCTION)
	SIGN (CONSTRUCTION) (2-POST)
→	TRAFFIC FLOW
	PORTABLE BARRIER RAIL
	ARROW BOARD TYPE C
	ARROW BOARD TYPE C (SINGLE ARROW)
	TEMPORARY BARRICADE (TYPE III)
	FLAGGER
A	WARNING LIGHT (TYPE A) (LOW-INTENSITY FLASHING)

UNOFFICIAL SET

NOT FOR BIDDING

SEALED BY

LORI J. LANGE
REGISTERED ENGINEER
AGRICULTURE
COMMERCE
NO. 105017
STATE OF TENNESSEE

STATE OF TENNESSEE
DEPARTMENT OF TRANSPORTATION

TRAFFIC CONTROL

TABULATED QUANTITIES

27-JAN-2014 10:14
\\JU03WF01.tdot.state.tn.us\03Shared\SURVEY\DESIGN\PIN 107847.00 Cheatham Co SR 49\014A.SHT

TENNESSEE D.O.T.
DESIGN DIVISION
FILE NO.

TYPE	YEAR	PROJECT NO.	SHEET NO.
R.O.W.	2012	STP-49(26)	14B
CONST.	2014	STP-49(26)	14B

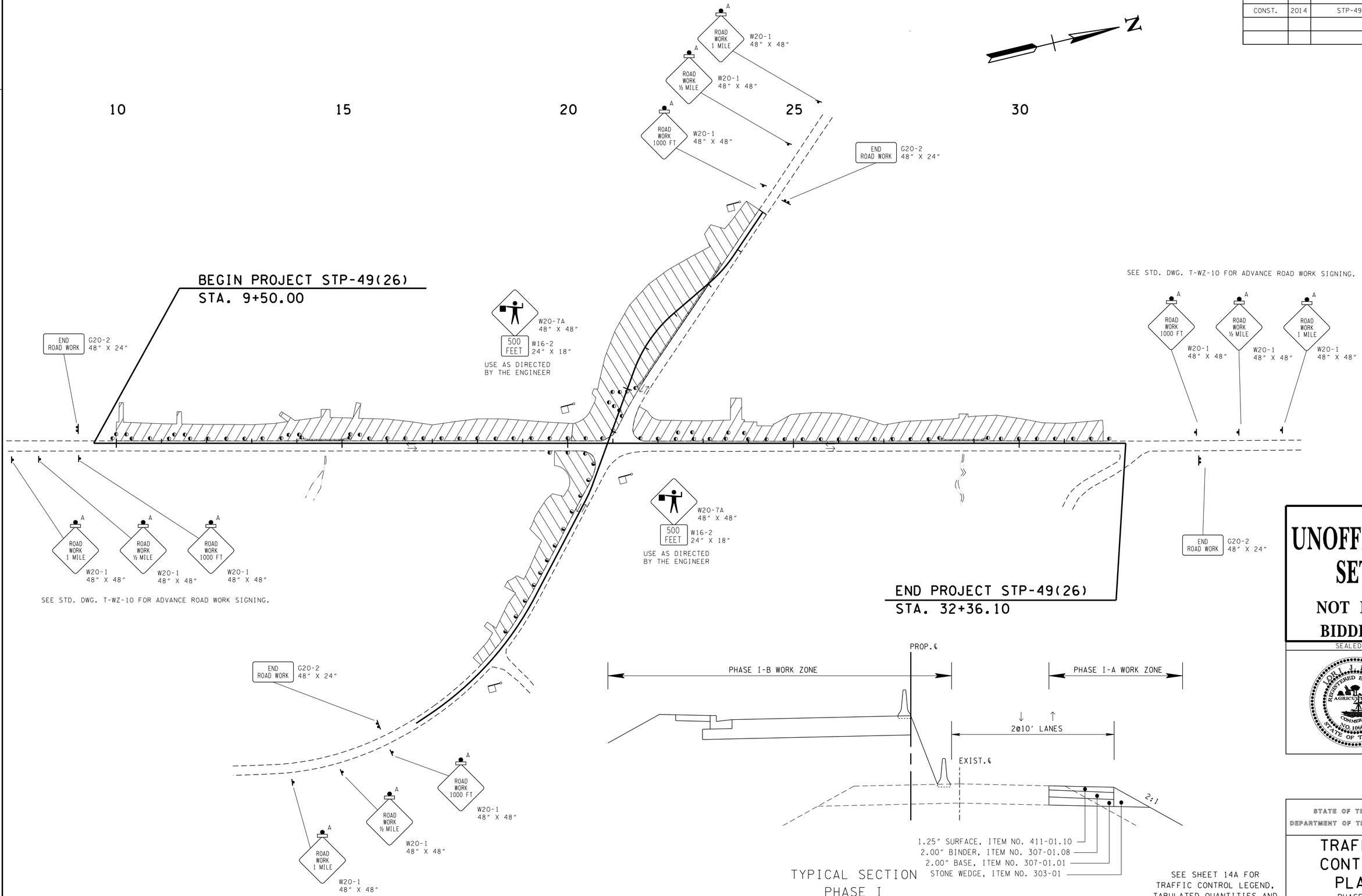

TYPICAL SECTION
PHASE I
N.T.S.

SEE SHEET 14A FOR TRAFFIC CONTROL LEGEND, TABULATED QUANTITIES AND PHASES OF CONSTRUCTION.

UNOFFICIAL SET

NOT FOR BIDDING

SEALED BY

JOHN J. LANGE
REGISTERED ENGINEER
AGRICULTURE COMMERCE
NO. 106017
STATE OF TENNESSEE

STATE OF TENNESSEE
DEPARTMENT OF TRANSPORTATION

TRAFFIC CONTROL PLAN

PHASE I

SCALE: 1"=100'

27-JAN-2014 10:14
\\JJ03WF01.tdot.state.tn.us\03Shared\SURVEY\DESIGN\PIN 107847.00 Cheatham Co SR 49\014B.SHT

TENNESSEE D.O.T.
DESIGN DIVISION
FILE NO.

TYPE	YEAR	PROJECT NO.	SHEET NO.
R.O.W.	2012	STP-49(26)	14C
CONST.	2014	STP-49(26)	14C

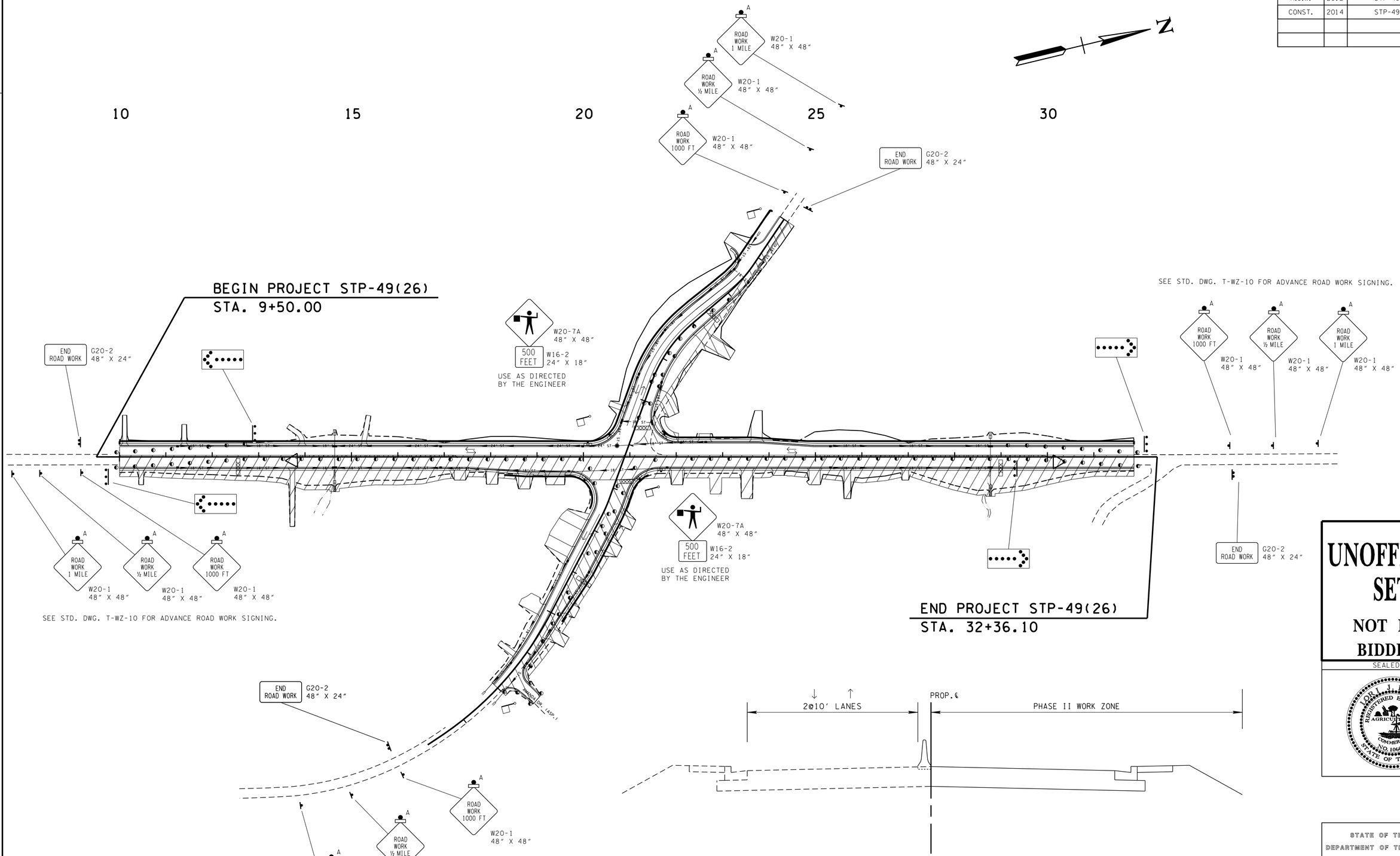

TYPICAL SECTION
PHASE II
N.T.S.

SEE SHEET 14A FOR TRAFFIC CONTROL LEGEND, TABULATED QUANTITIES AND PHASES OF CONSTRUCTION.

UNOFFICIAL SET

NOT FOR BIDDING

SEALED BY

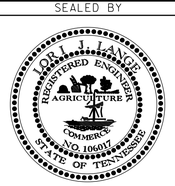

STATE OF TENNESSEE
DEPARTMENT OF TRANSPORTATION

TRAFFIC CONTROL PLAN

PHASE II

SCALE: 1"=100'

27-JAN-2014 10:14
\\JU03WF01.tdot.state.tn.us\03Shared\SURVEY\DESIGN\PIN 107847.00 Cheatham Co SR 49\014C.SHT

TYPE	YEAR	PROJECT NO.	SHEET NO.
R.O.W.	2012	STP-49(26)	15
CONST.	2014	STP-49(26)	17

TENNESSEE D.O.T.
DESIGN DIVISION

FILE NO.

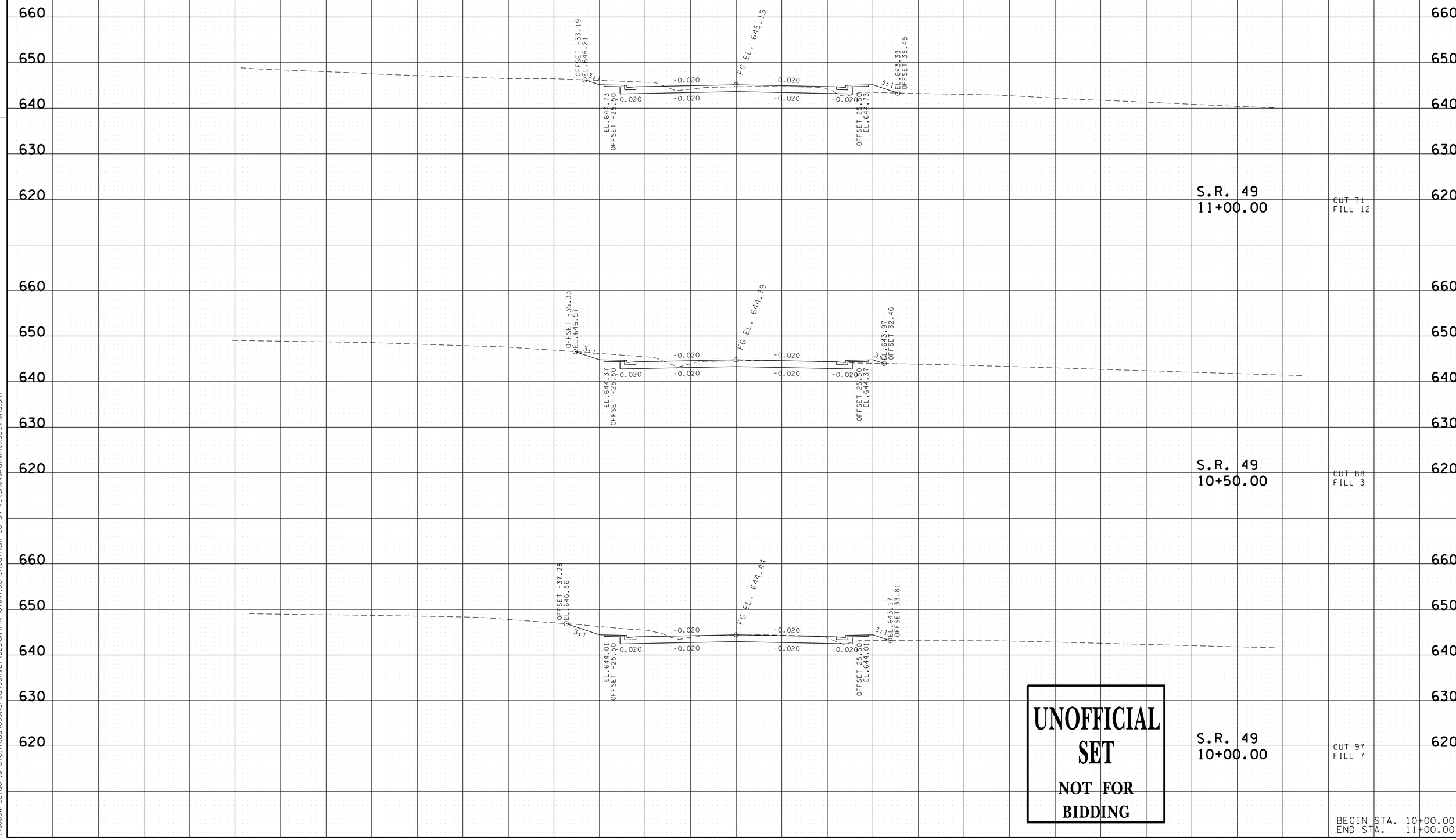

UNOFFICIAL SET
NOT FOR BIDDING

BEGIN STA. 10+00.00
END STA. 11+00.00

22-JAN-2014 15:01
\\JJ03WF01.tdot.state.tn.us\03Shared\SURVEY\DESIGN\PIN 107847.00 Cheatham Co SR 49\SR049MainlineXSections.SHT

TYPE	YEAR	PROJECT NO.	SHEET NO.
R.O.W.	2012	STP-49(26)	16
CONST.	2014	STP-49(26)	18

TENNESSEE D.O.T.
DESIGN DIVISION

FILE NO.

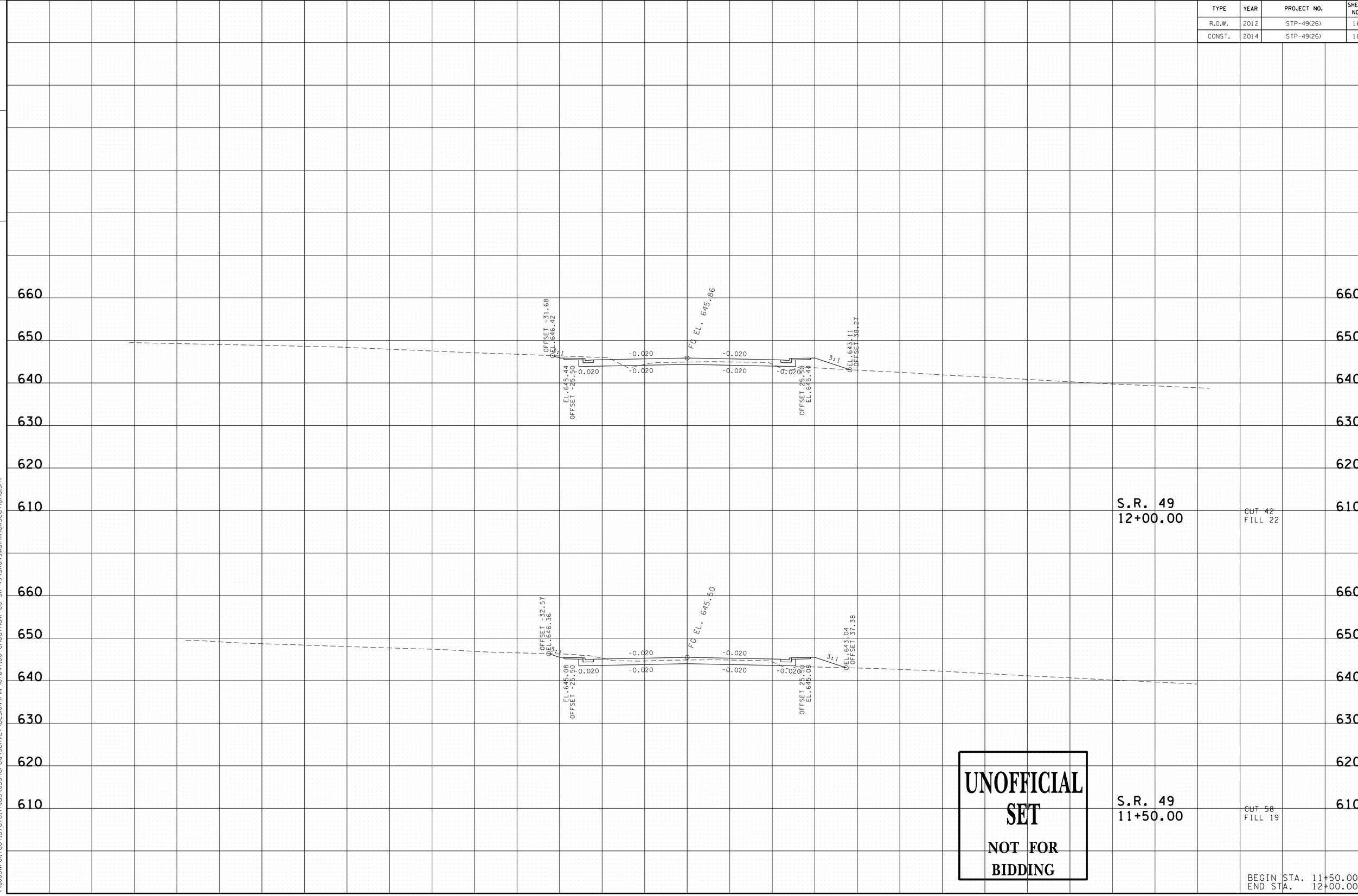

UNOFFICIAL SET
NOT FOR BIDDING

BEGIN STA. 11+50.00
END STA. 12+00.00

22-JAN-2014 15:01
\\JJ03WF01.tdot.state.tn.us\03Shared\SURVEY\DESIGN\PIN 107847.00 Cheatham Co SR 49\SR049MainlineXSections.SHT

TYPE	YEAR	PROJECT NO.	SHEET NO.
R.O.W.	2012	STP-49(26)	17
CONST.	2014	STP-49(26)	19

FILE NO.

TENNESSEE D.O.T.
DESIGN DIVISION

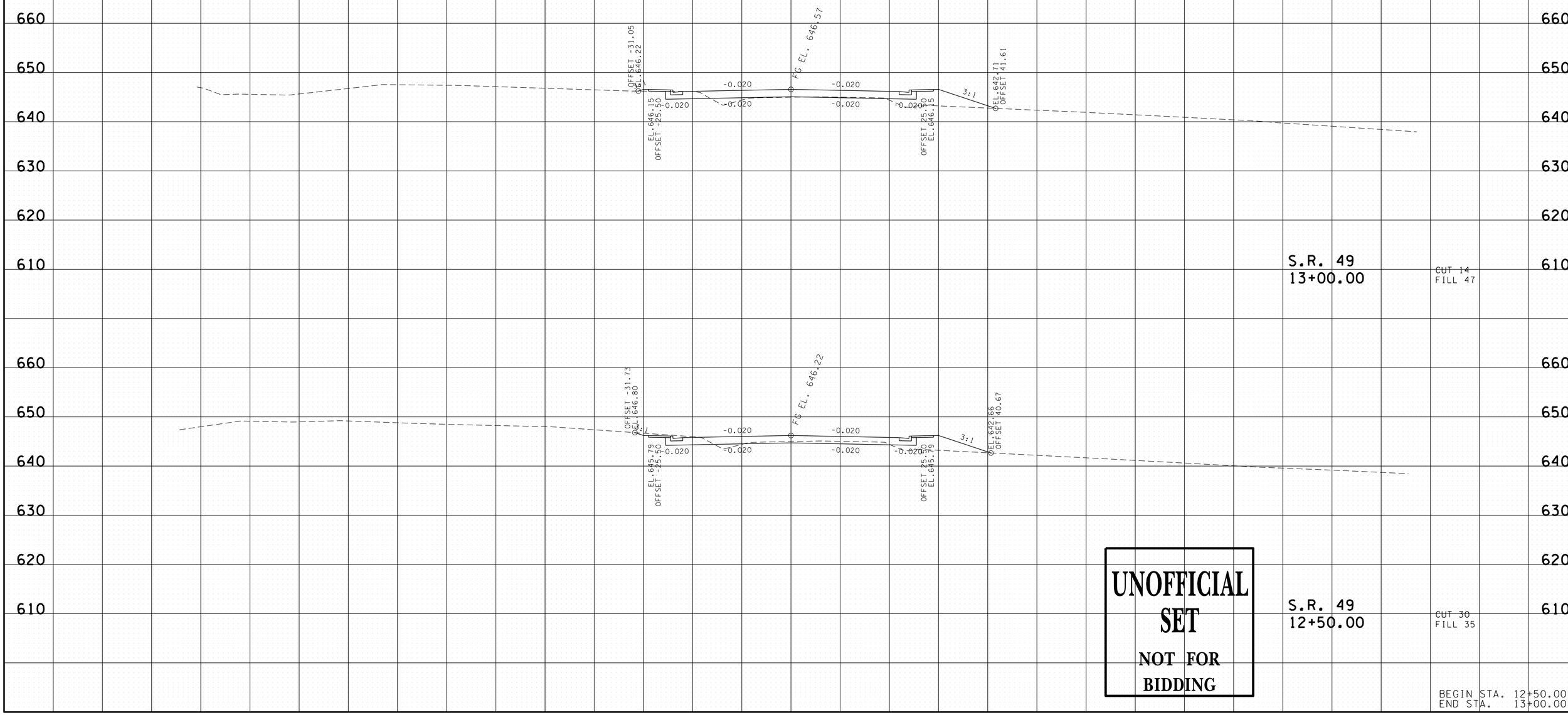

UNOFFICIAL SET
NOT FOR BIDDING

BEGIN STA. 12+50.00
END STA. 13+00.00

22-JAN-2014 15:02
\\JJ03WF01.tdot.state.tn.us\03Shared\SURVEY\DESIGN\PIN 107847.00 Cheatham Co SR 49\SR049MainlineXSections.SHT

TYPE	YEAR	PROJECT NO.	SHEET NO.
R.O.W.	2012	STP-49(26)	18
CONST.	2014	STP-49(26)	20

FILE NO.

TENNESSEE D.O.T.
DESIGN DIVISION

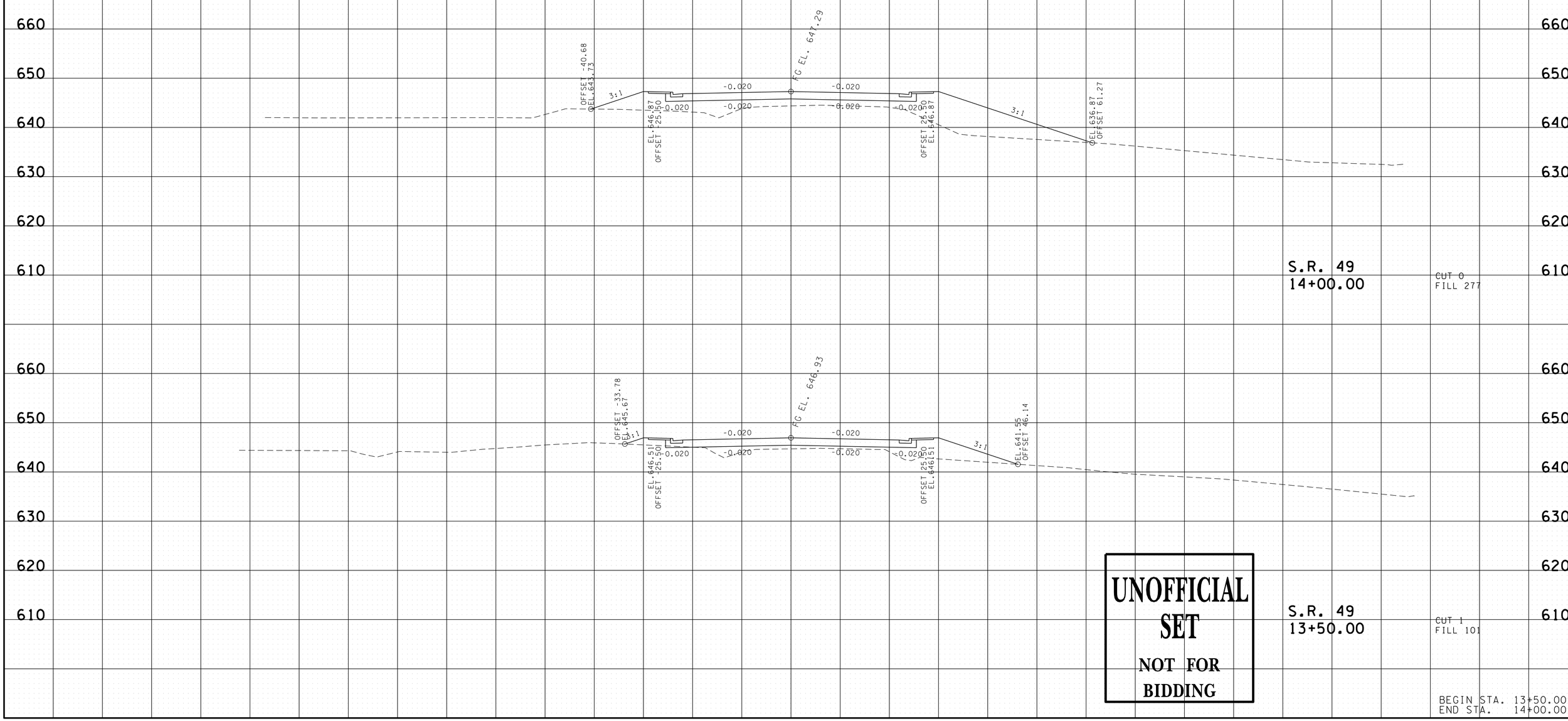

UNOFFICIAL SET
NOT FOR BIDDING

BEGIN STA. 13+50.00
END STA. 14+00.00

22-JAN-2014 15:02
\\JI03WF01.tdot.state.tn.us\03Shared\SURVEY\DESIGN\PIN 107847.00 Cheatham Co SR 49\SR049MainlineXSections.SHT

TYPE	YEAR	PROJECT NO.	SHEET NO.
R.O.W.	2012	STP-49(26)	19
CONST.	2014	STP-49(26)	21

TENNESSEE D.O.T.
DESIGN DIVISION

FILE NO.

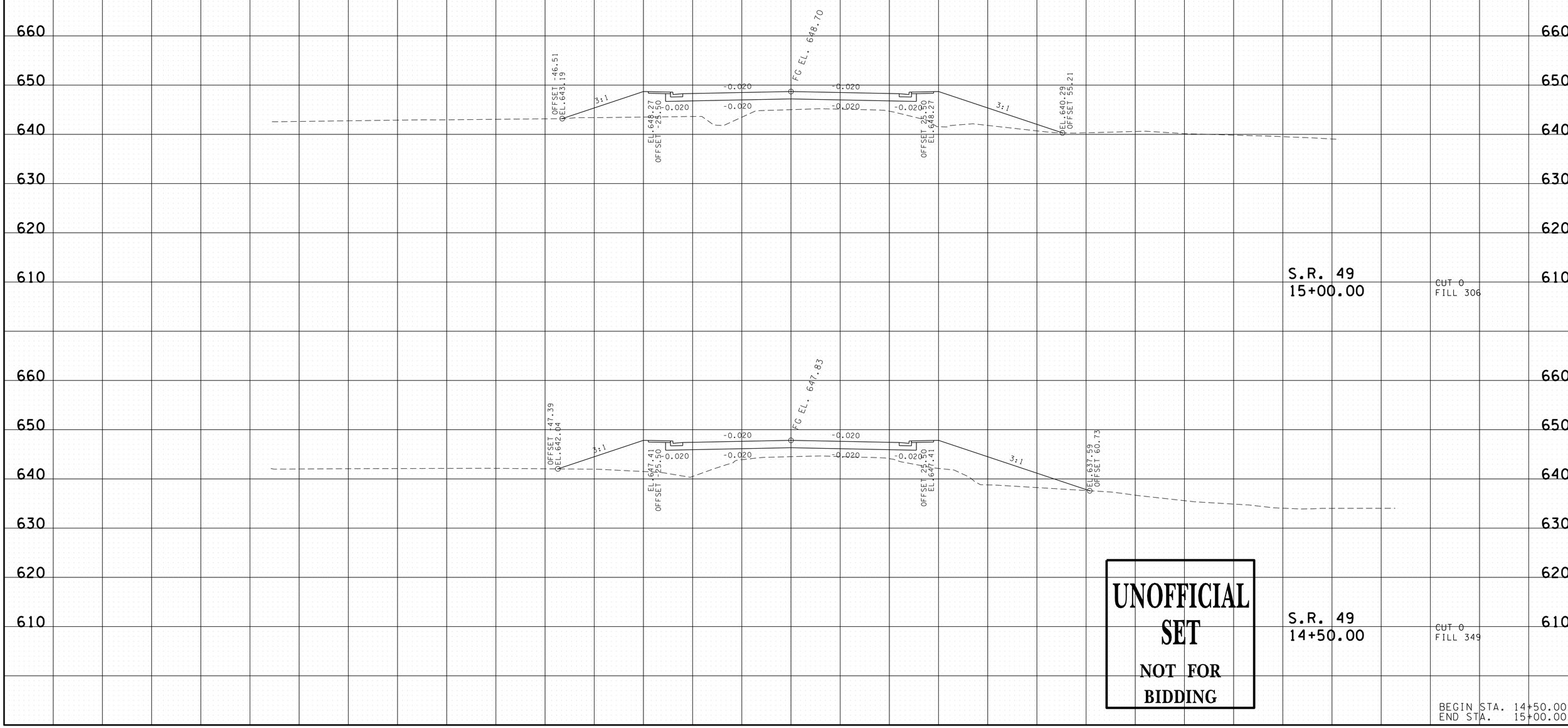

S.R. 49
15+00.00

CUT 0
FILL 306

S.R. 49
14+50.00

CUT 0
FILL 349

UNOFFICIAL SET
NOT FOR BIDDING

BEGIN STA. 14+50.00
END STA. 15+00.00

22-JAN-2014 15:02
\\JJ03WF01.tdot.state.tn.us\03Shared\SURVEY\DESIGN\PIN 107847.00 Cheatham Co SR 49\SR049MainlineXSections.SHT

TYPE	YEAR	PROJECT NO.	SHEET NO.
R.O.W.	2012	STP-49(26)	20
CONST.	2014	STP-49(26)	22

FILE NO.

TENNESSEE D.O.T.
DESIGN DIVISION

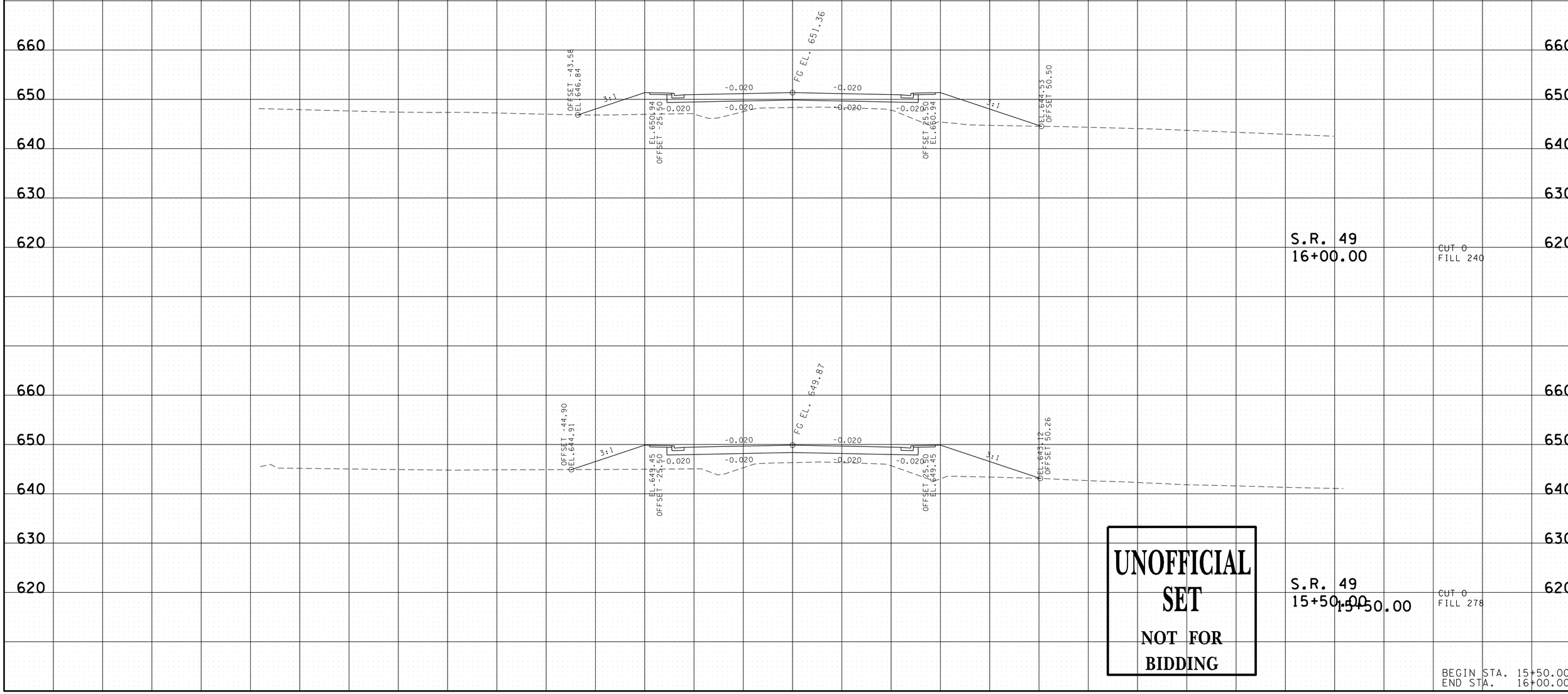

UNOFFICIAL SET
NOT FOR BIDDING

BEGIN STA. 15+50.00
END STA. 16+00.00

22-JAN-2014 15:02
\\JI03WF01.tdot.state.tn.us\03Shared\SURVEY\DESIGN\PIN 107847.00 Cheatham Co SR 49\SR049MainlineXSections.SHT

TYPE	YEAR	PROJECT NO.	SHEET NO.
R.O.W.	2012	STP-49(26)	21
CONST.	2014	STP-49(26)	23

FILE NO.

TENNESSEE D.O.T.
DESIGN DIVISION

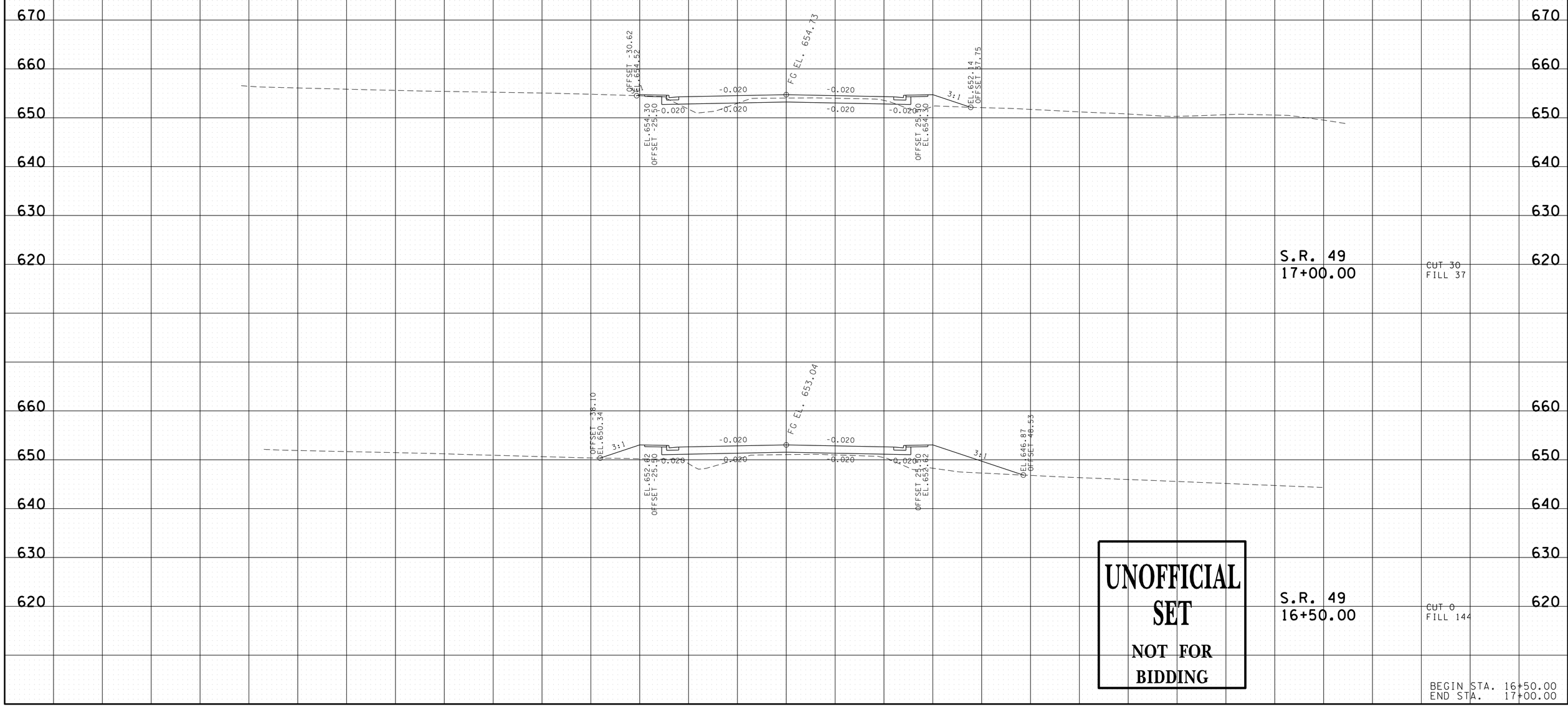

UNOFFICIAL SET
NOT FOR BIDDING

BEGIN STA. 16+50.00
END STA. 17+00.00

22-JAN-2014 15:02
\\JJ03WF01.tdot.state.tn.us\03Shared\SURVEY\DESIGN\PIN 107847.00 Cheatham Co SR 49\SR049MainlineXSections.SHT

TYPE	YEAR	PROJECT NO.	SHEET NO.
R.O.W.	2012	STP-49(26)	22
CONST.	2014	STP-49(26)	24

FILE NO.

TENNESSEE D.O.T.
DESIGN DIVISION

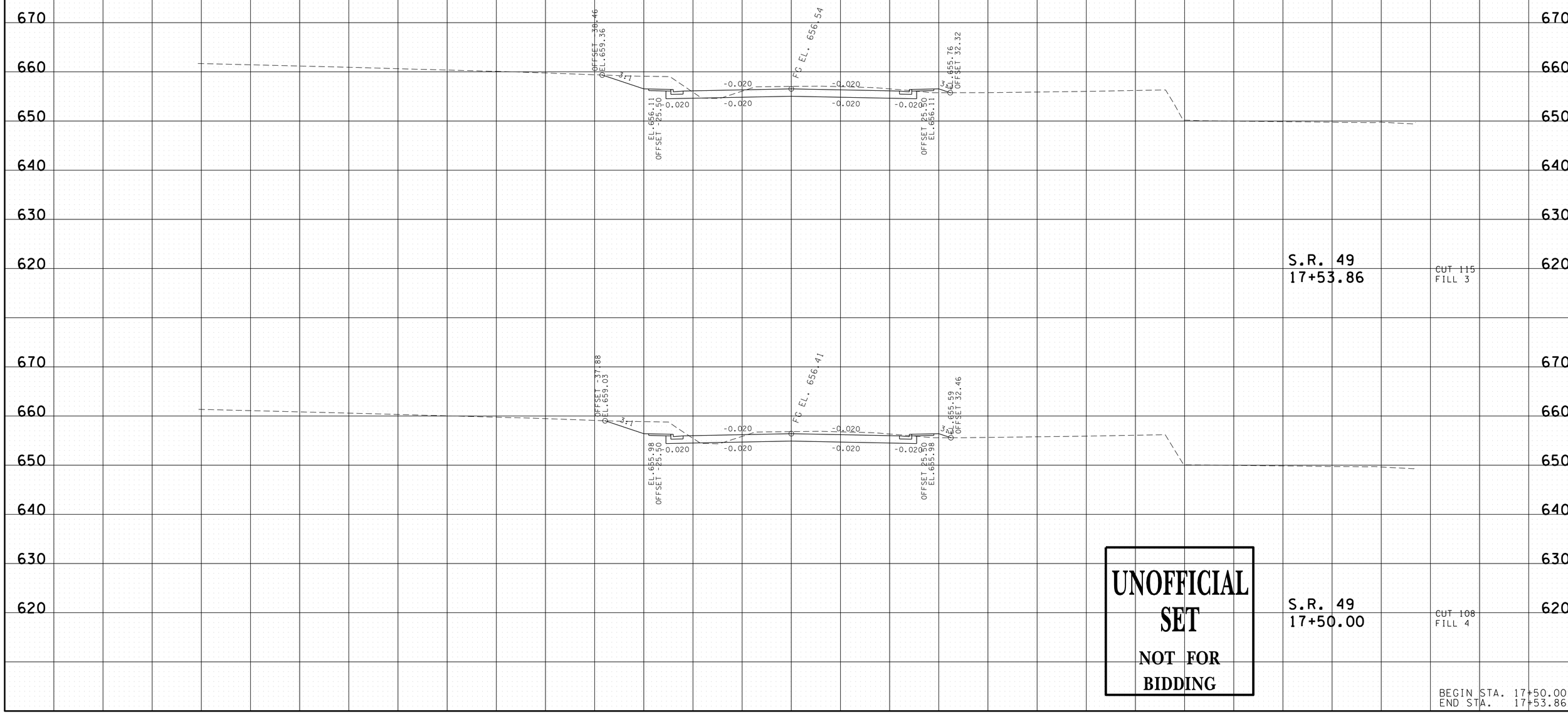

UNOFFICIAL SET
NOT FOR BIDDING

BEGIN STA. 17+50.00
END STA. 17+53.86

22-JAN-2014 15:02
\\JJ03WF01.tdot.state.tn.us\03Shared\SURVEY\DESIGN\PIN 107847.00 Cheatham Co SR 49\SR049MainlineXSections.SHT

TYPE	YEAR	PROJECT NO.	SHEET NO.
R.O.W.	2012	STP-49(26)	23
CONST.	2014	STP-49(26)	25

TENNESSEE D.O.T.
DESIGN DIVISION
FILE NO.

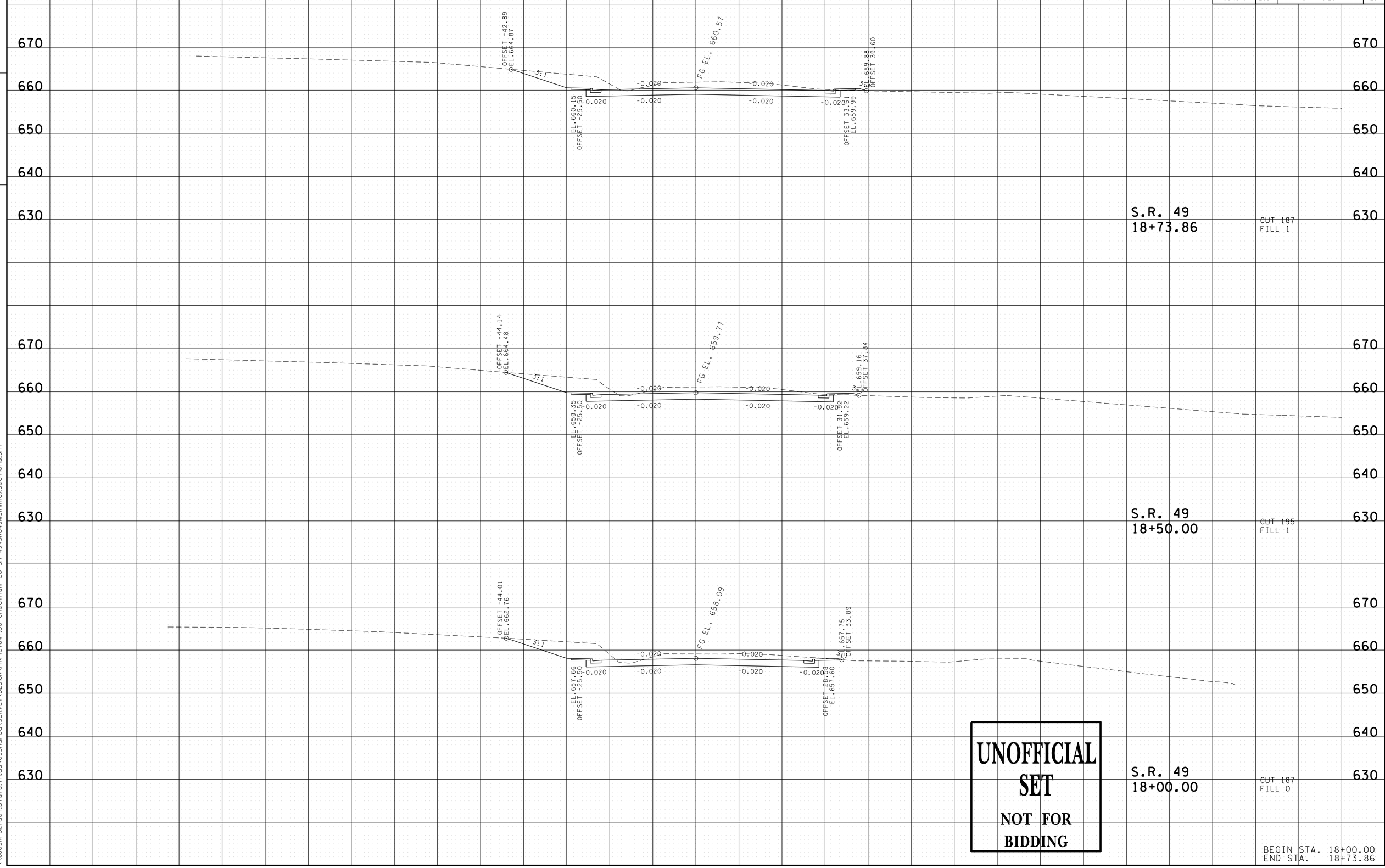

UNOFFICIAL SET
NOT FOR BIDDING

BEGIN STA. 18+00.00
END STA. 18+73.86

22-JAN-2014 15:02
\\JJ03WF01.tdot.state.tn.us\03Shared\SURVEY\DESIGN\PIN 107847.00 Cheatham Co SR 49\SR049MainlineXSections.SHT

TYPE	YEAR	PROJECT NO.	SHEET NO.
R.O.W.	2012	STP-49(26)	24
CONST.	2014	STP-49(26)	26

TENNESSEE D.O.T.
DESIGN DIVISION

FILE NO.

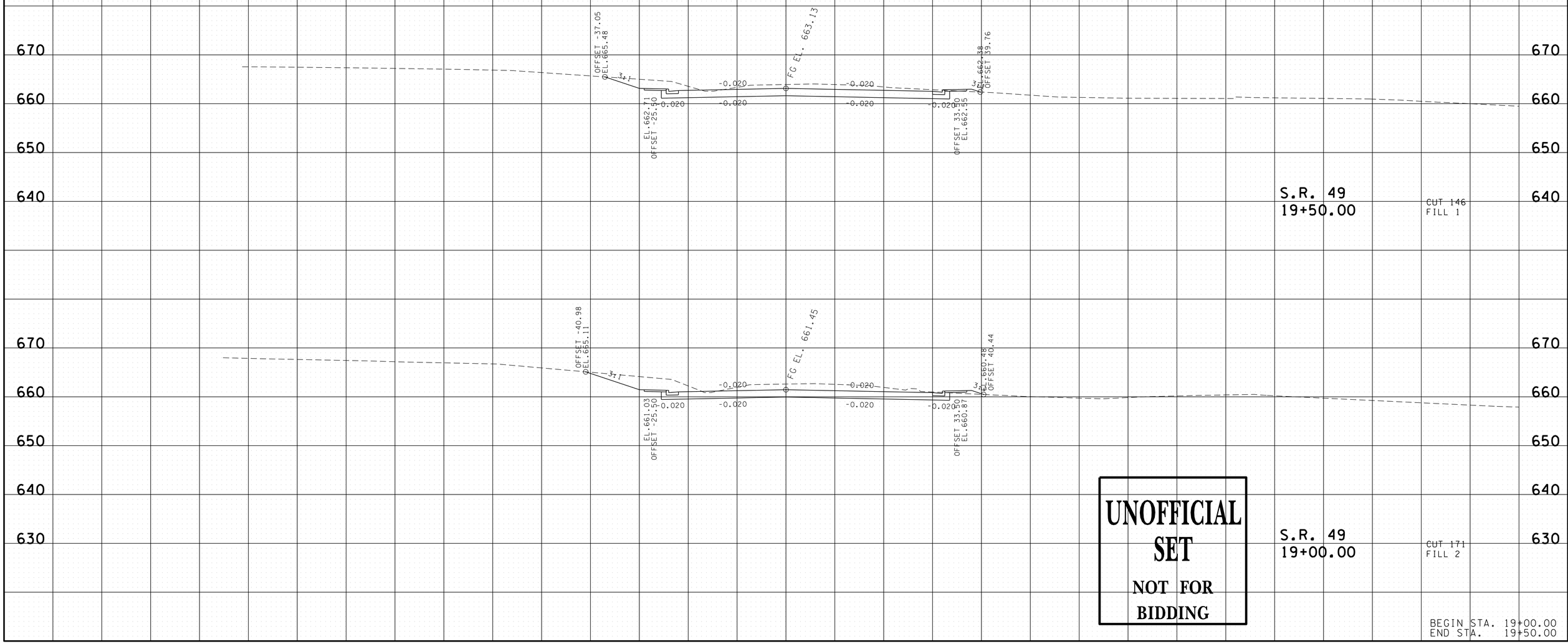

UNOFFICIAL SET
NOT FOR BIDDING

BEGIN STA. 19+00.00
END STA. 19+50.00

22-JAN-2014 15:02
\\JJ03WF01.tdot.state.tn.us\03Shared\SURVEY\DESIGN\PIN 107847.00 Cheatham Co SR 49\SR049MainlineXSections.SHT

TYPE	YEAR	PROJECT NO.	SHEET NO.
R.O.W.	2012	STP-49(26)	25
CONST.	2014	STP-49(26)	27

TENNESSEE D.O.T.
DESIGN DIVISION

FILE NO.

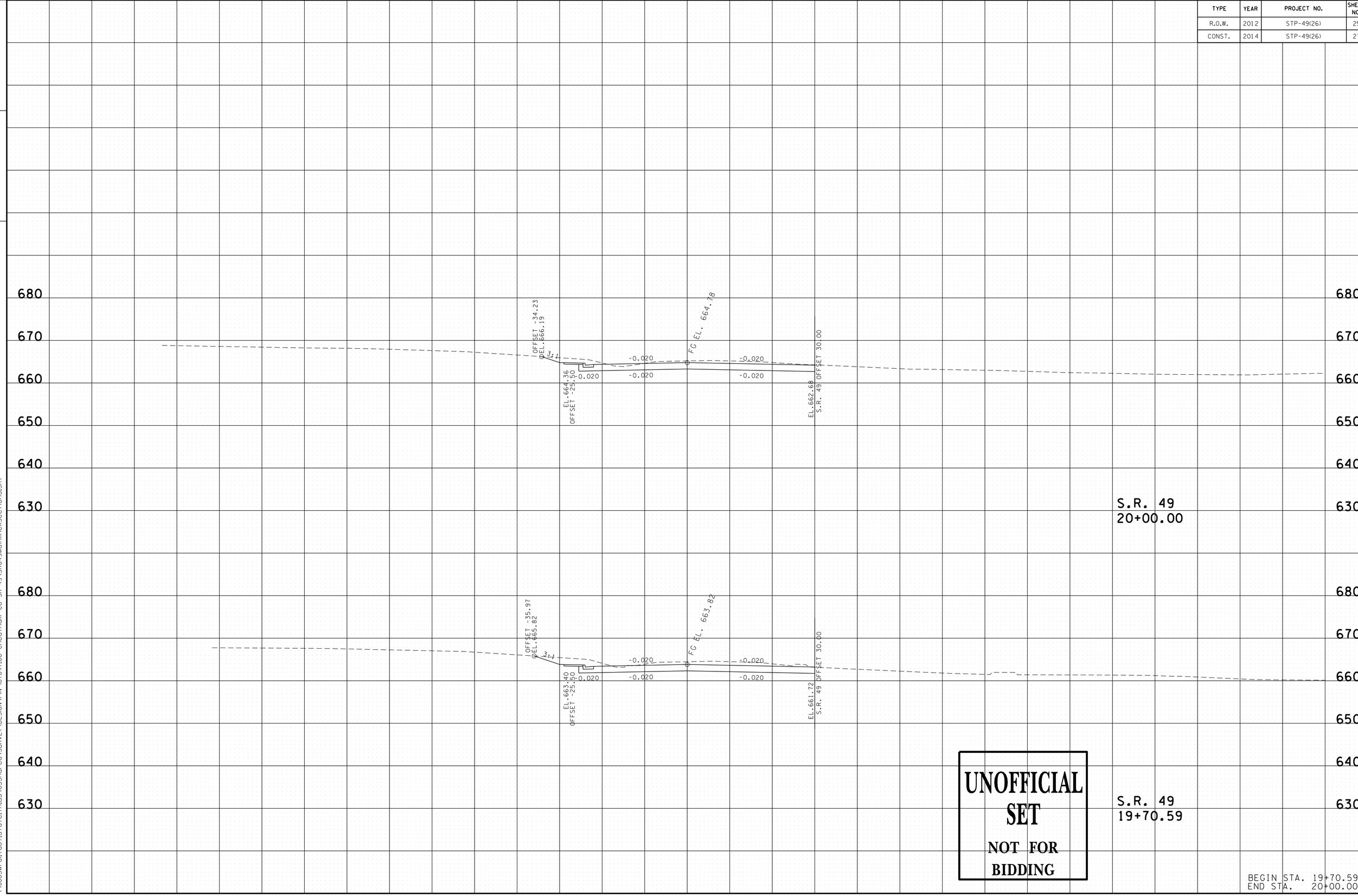

UNOFFICIAL SET
NOT FOR BIDDING

BEGIN STA. 19+70.59
END STA. 20+00.00

22-JAN-2014 15:02
\\JI03WF01.tdot.state.tn.us\03Shared\SURVEY\DESIGN\PIN 107847.00 Cheatham Co SR 49\SR049MainlinexSections.SHT

TYPE	YEAR	PROJECT NO.	SHEET NO.
R.O.W.	2012	STP-49(26)	26
CONST.	2014	STP-49(26)	28

FILE NO.

TENNESSEE D.O.T.
DESIGN DIVISION

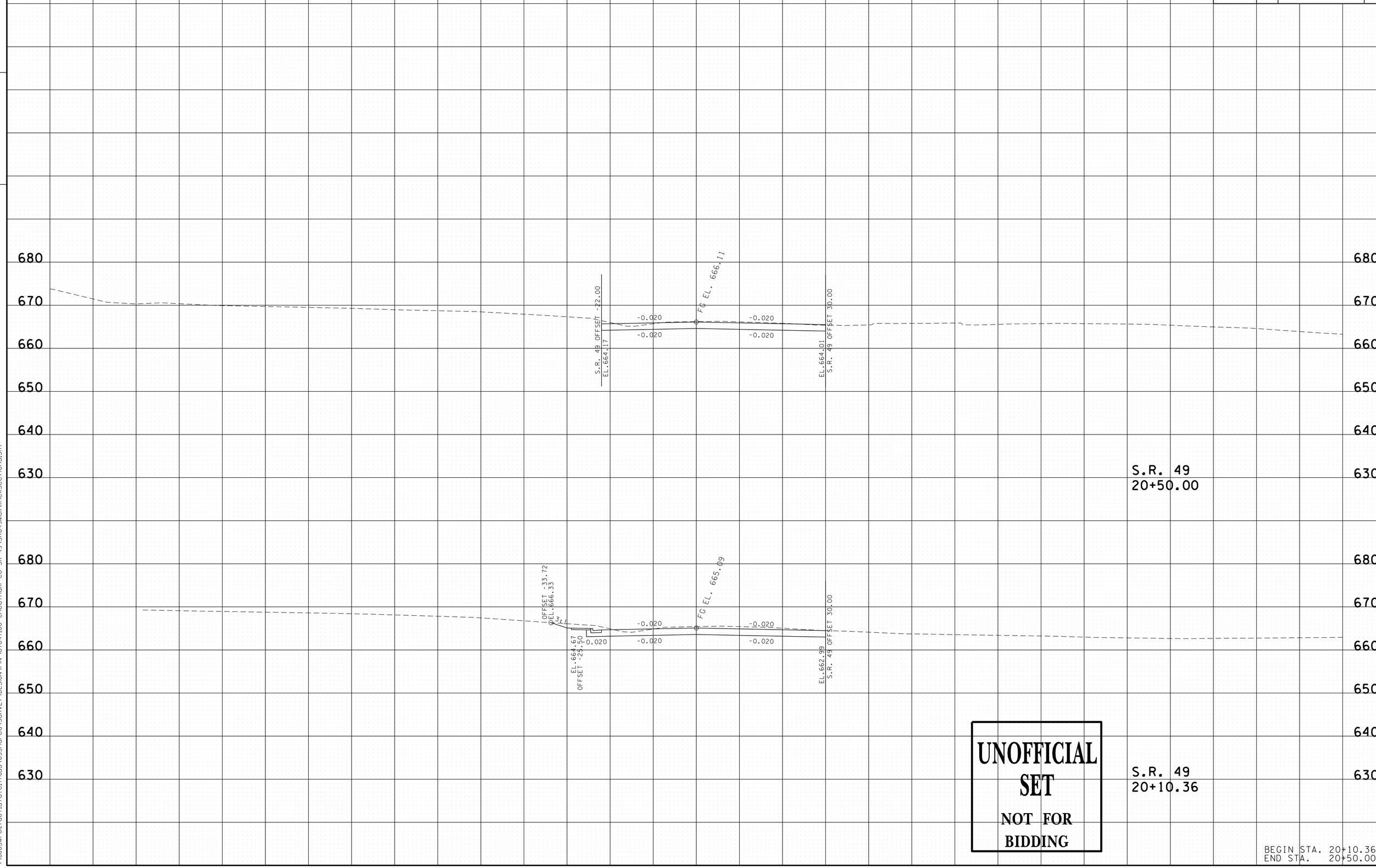

UNOFFICIAL SET
NOT FOR BIDDING

BEGIN STA. 20+10.36
END STA. 20+50.00

22-JAN-2014 15:02
\\J03WF01.tdot.state.tn.us\03Shared\SURVEY\DESIGN\PIN 107847.00 Cheatham Co SR 49\SR049MainlinexSections.SHT

TYPE	YEAR	PROJECT NO.	SHEET NO.
R.O.W.	2012	STP-49(26)	27
CONST.	2014	STP-49(26)	29

TENNESSEE D.O.T.
DESIGN DIVISION
FILE NO.

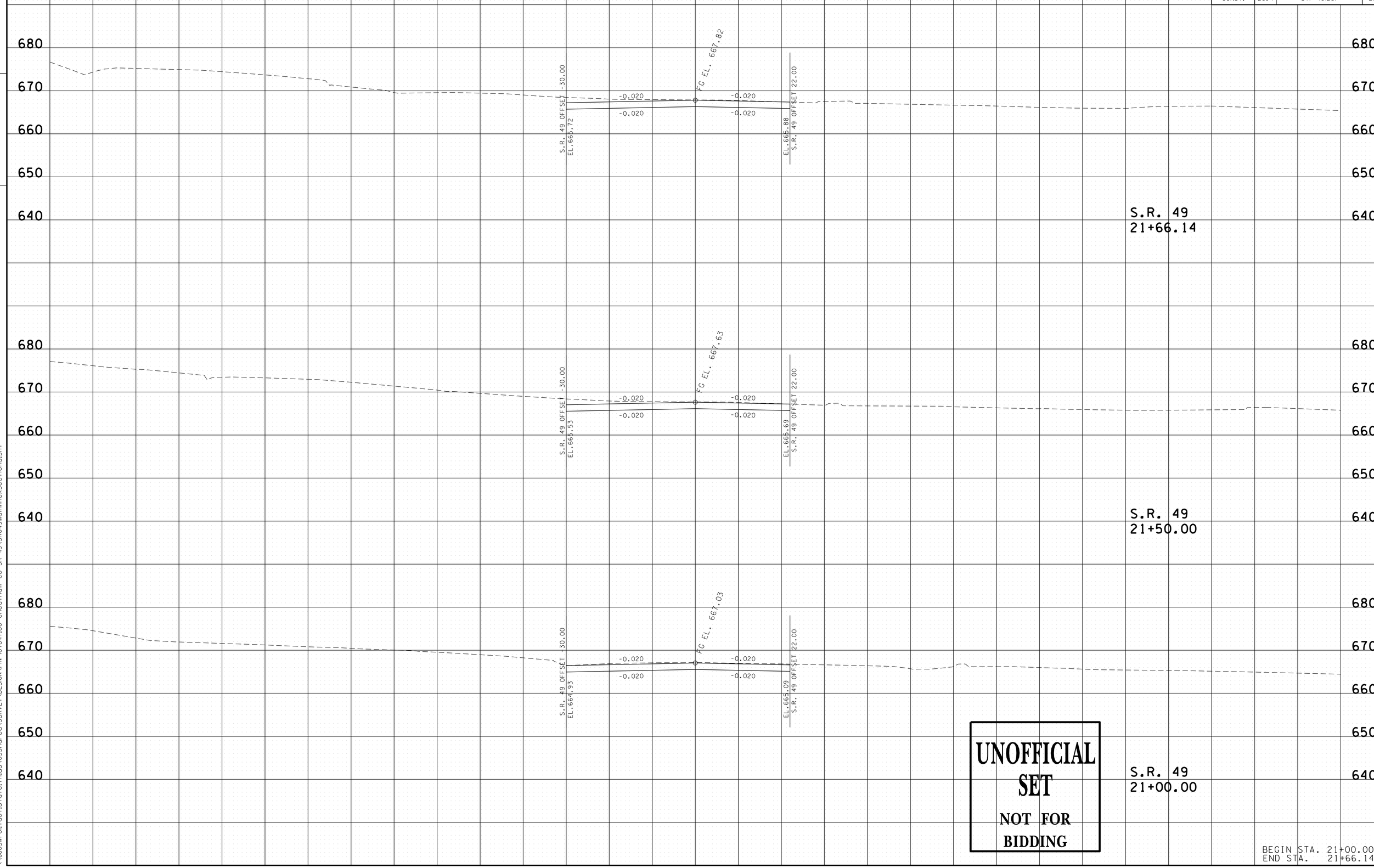

UNOFFICIAL SET
NOT FOR BIDDING

BEGIN STA. 21+00.00
END STA. 21+66.14

22-JAN-2014 15:02
\\J03WF01.tdot.state.tn.us\03Shared\SURVEY\DESIGN\PIN 107847.00 Cheatham Co SR 49\SR049MainlineXSections.SHT

TYPE	YEAR	PROJECT NO.	SHEET NO.
R.O.W.	2012	STP-49(26)	28
CONST.	2014	STP-49(26)	30

TENNESSEE D.O.T.
DESIGN DIVISION

FILE NO.

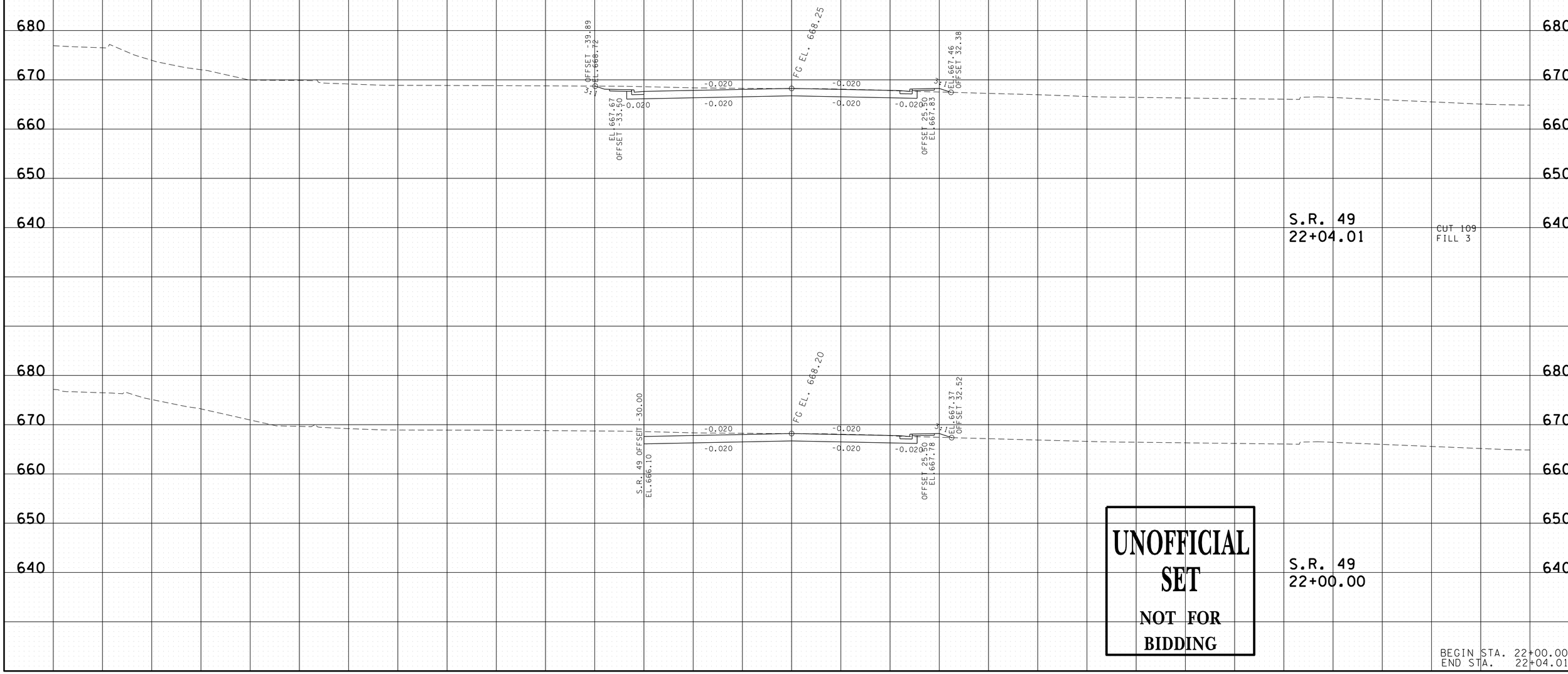

UNOFFICIAL SET
NOT FOR BIDDING

BEGIN STA. 22+00.00
END STA. 22+04.01

22-JAN-2014 15:02
\\JI03WF01.tdot.state.tn.us\03Shared\SURVEY\DESIGN\PIN 107847.00 Cheatham Co SR 49\SR049MainlineXSections.SHT

TYPE	YEAR	PROJECT NO.	SHEET NO.
R.O.W.	2012	STP-49(26)	29
CONST.	2014	STP-49(26)	31

TENNESSEE D.O.T.
DESIGN DIVISION

FILE NO.

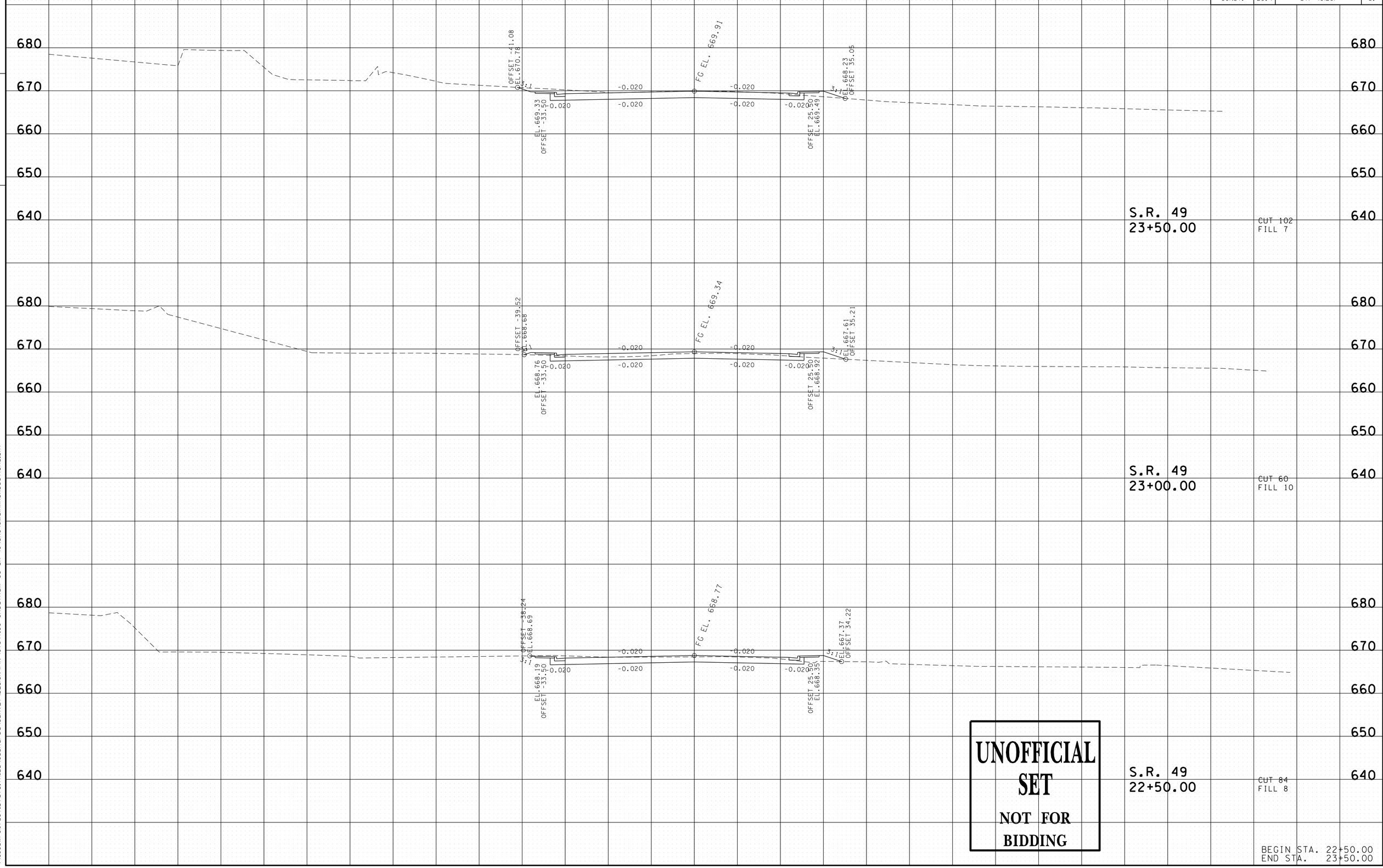

UNOFFICIAL SET
NOT FOR BIDDING

BEGIN STA. 22+50.00
END STA. 23+50.00

22-JAN-2014 15:02
\\JI03WF01.tdot.state.tn.us\03Shared\SURVEY\DESIGN\PIN 107847.00 Cheatham Co SR 49\SR049MainlineXSections.SHT

TYPE	YEAR	PROJECT NO.	SHEET NO.
R.O.W.	2012	STP-49(26)	30
CONST.	2014	STP-49(26)	32

TENNESSEE D.O.T.
DESIGN DIVISION

FILE NO.

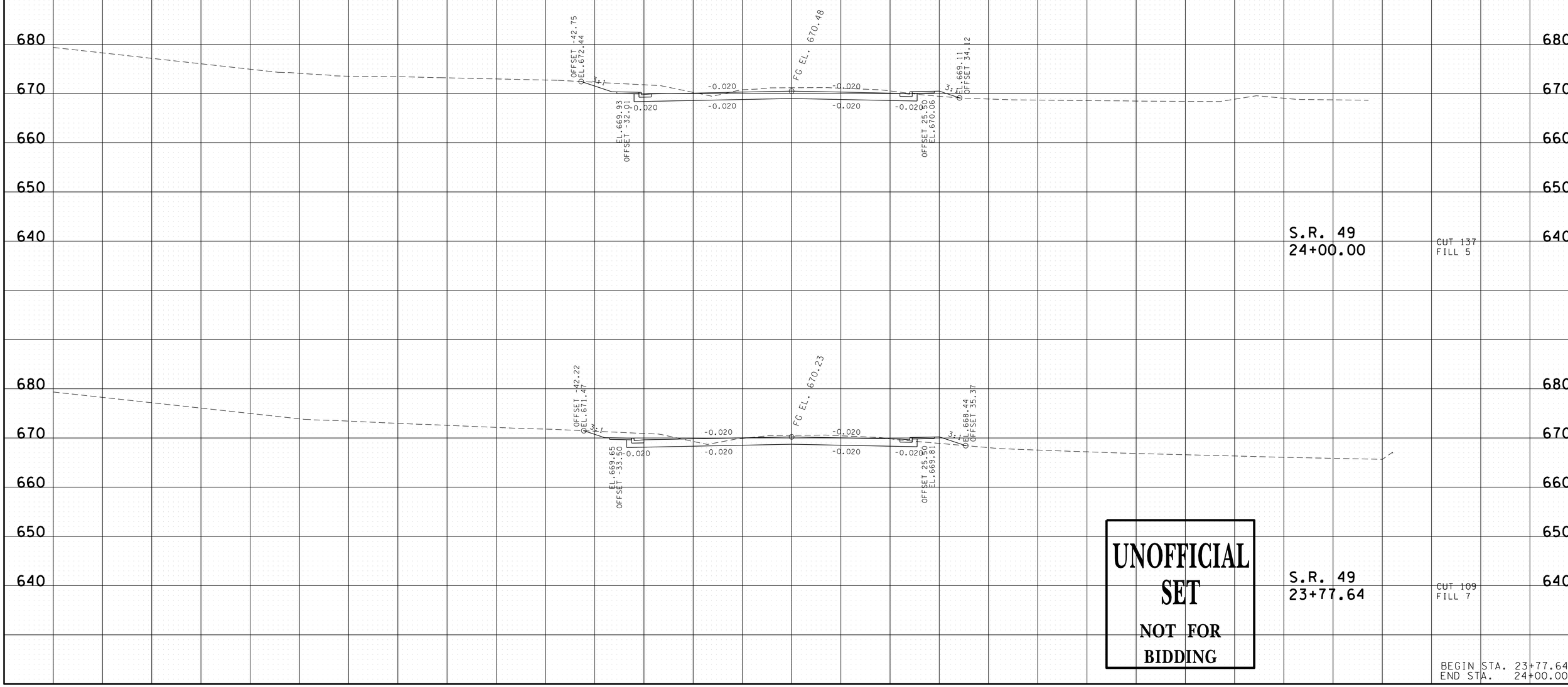

UNOFFICIAL SET
NOT FOR BIDDING

BEGIN STA. 23+77.64
END STA. 24+00.00

22-JAN-2014 15:02
\\JI03WF01.tdot.state.tn.us\03Shared\SURVEY\DESIGN\PIN 107847.00 Cheatham Co SR 49\SR049MainlineXSections.SHT

TYPE	YEAR	PROJECT NO.	SHEET NO.
R.O.W.	2012	STP-49(26)	31
CONST.	2014	STP-49(26)	33

FILE NO.

TENNESSEE D.O.T.
DESIGN DIVISION

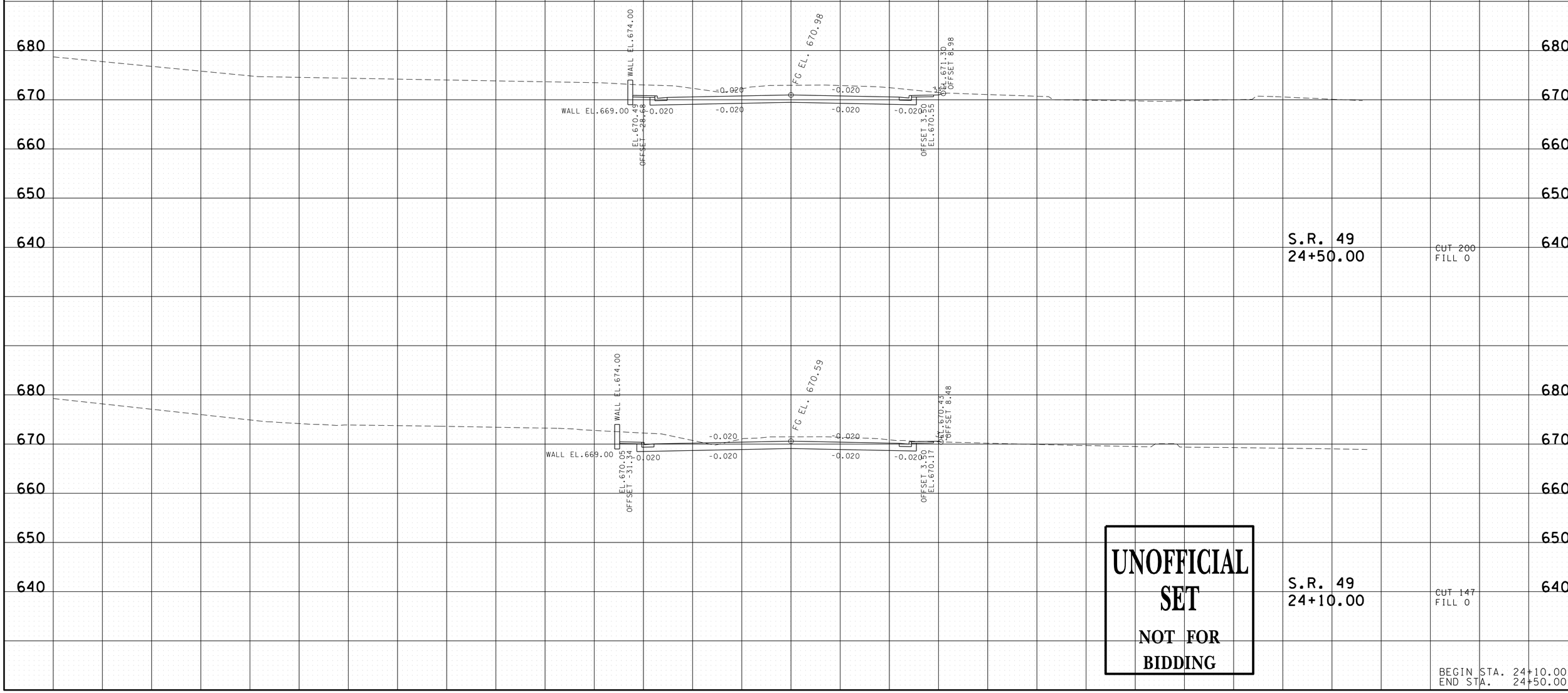

UNOFFICIAL SET
NOT FOR BIDDING

BEGIN STA. 24+10.00
END STA. 24+50.00

22-JAN-2014 15:02
\\JI03WF01.tdot.state.tn.us\03Shared\SURVEY\DESIGN\PIN 107847.00 Cheatham Co SR 49\SR049MainlineXSections.SHT

TYPE	YEAR	PROJECT NO.	SHEET NO.
R.O.W.	2012	STP-49(26)	32
CONST.	2014	STP-49(26)	34

FILE NO.

TENNESSEE D.O.T.
DESIGN DIVISION

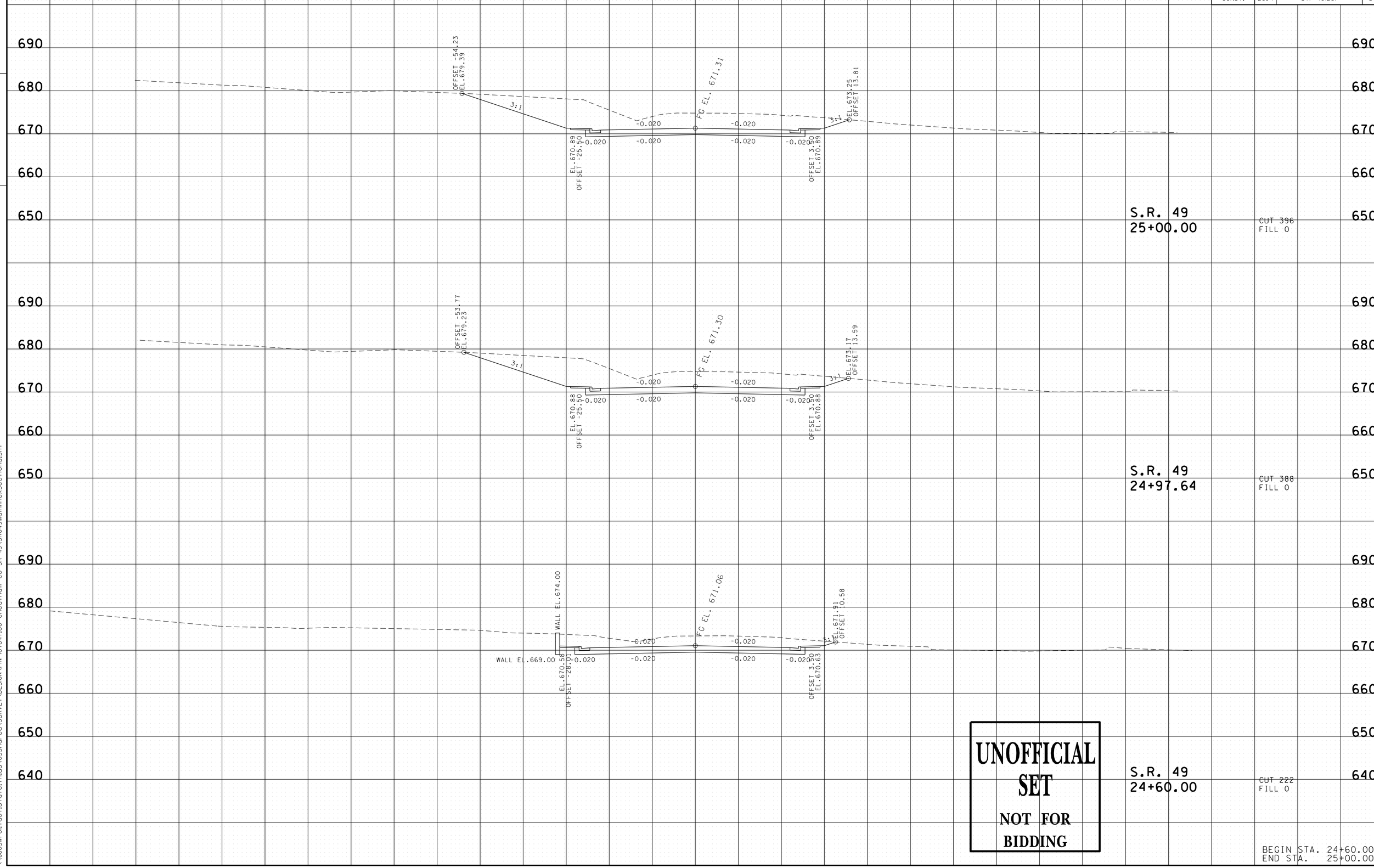

UNOFFICIAL SET
NOT FOR BIDDING

BEGIN STA. 24+60.00
END STA. 25+00.00

22-JAN-2014 15:03
\\JJ03WF01.tdot.state.tn.us\03Shared\SURVEY\DESIGN\PIN 107847.00 Cheatham Co SR 49\SR049MainlineXSections.SHT

TYPE	YEAR	PROJECT NO.	SHEET NO.
R.O.W.	2012	STP-49(26)	33
CONST.	2014	STP-49(26)	35

TENNESSEE D.O.T.
DESIGN DIVISION

FILE NO.

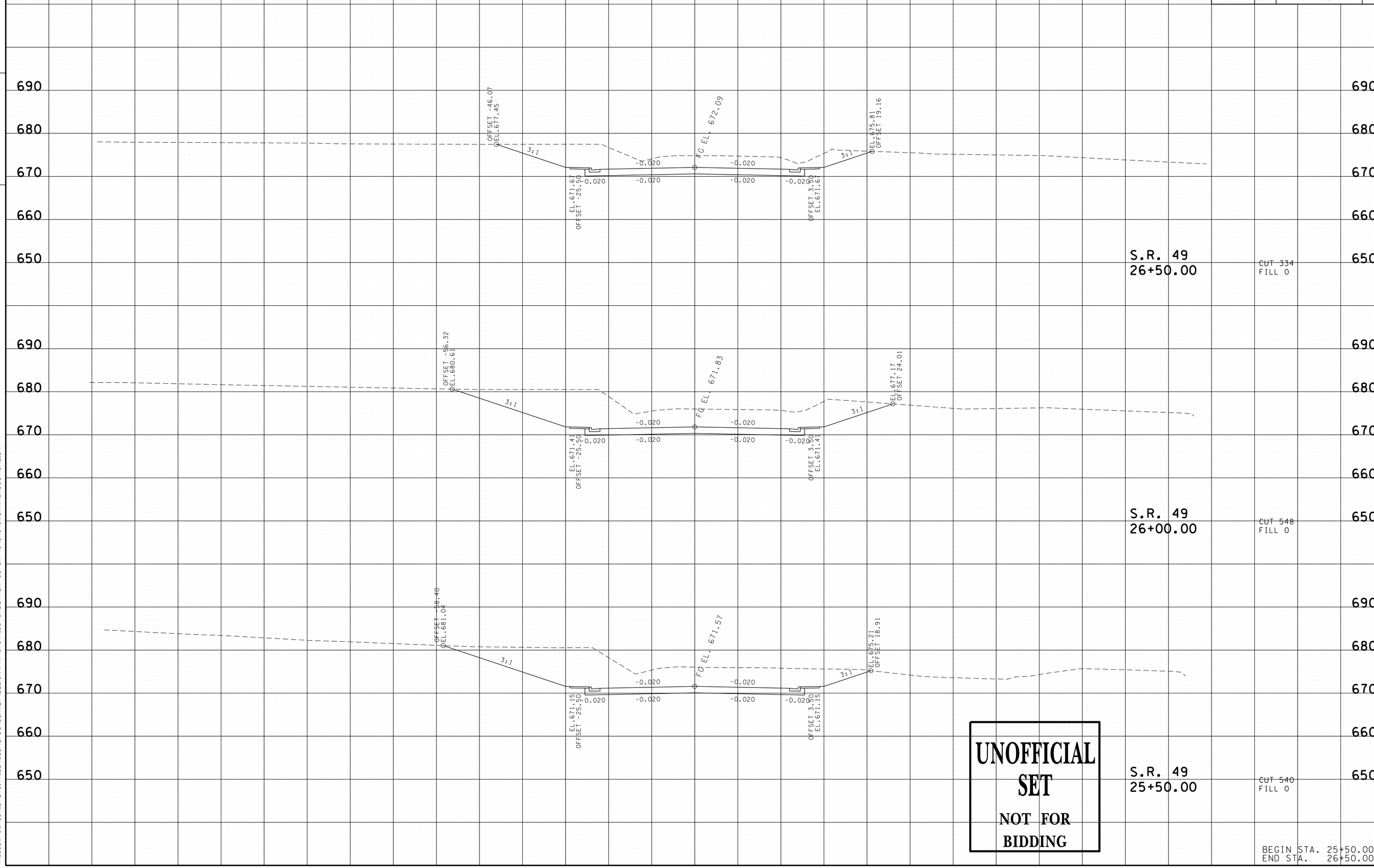

UNOFFICIAL SET
NOT FOR BIDDING

BEGIN STA. 25+50.00
END STA. 26+50.00

22-JAN-2014 15:03
\\JJ03WF01.tdot.state.tn.us\03Shared\SURVEY\DESIGN\PIN 107847.00 Cheatham Co SR 49\SR049MainlinexSections.SHT

TYPE	YEAR	PROJECT NO.	SHEET NO.
R.O.W.	2012	STP-49(26)	34
CONST.	2014	STP-49(26)	36

FILE NO.

TENNESSEE D.O.T.
DESIGN DIVISION

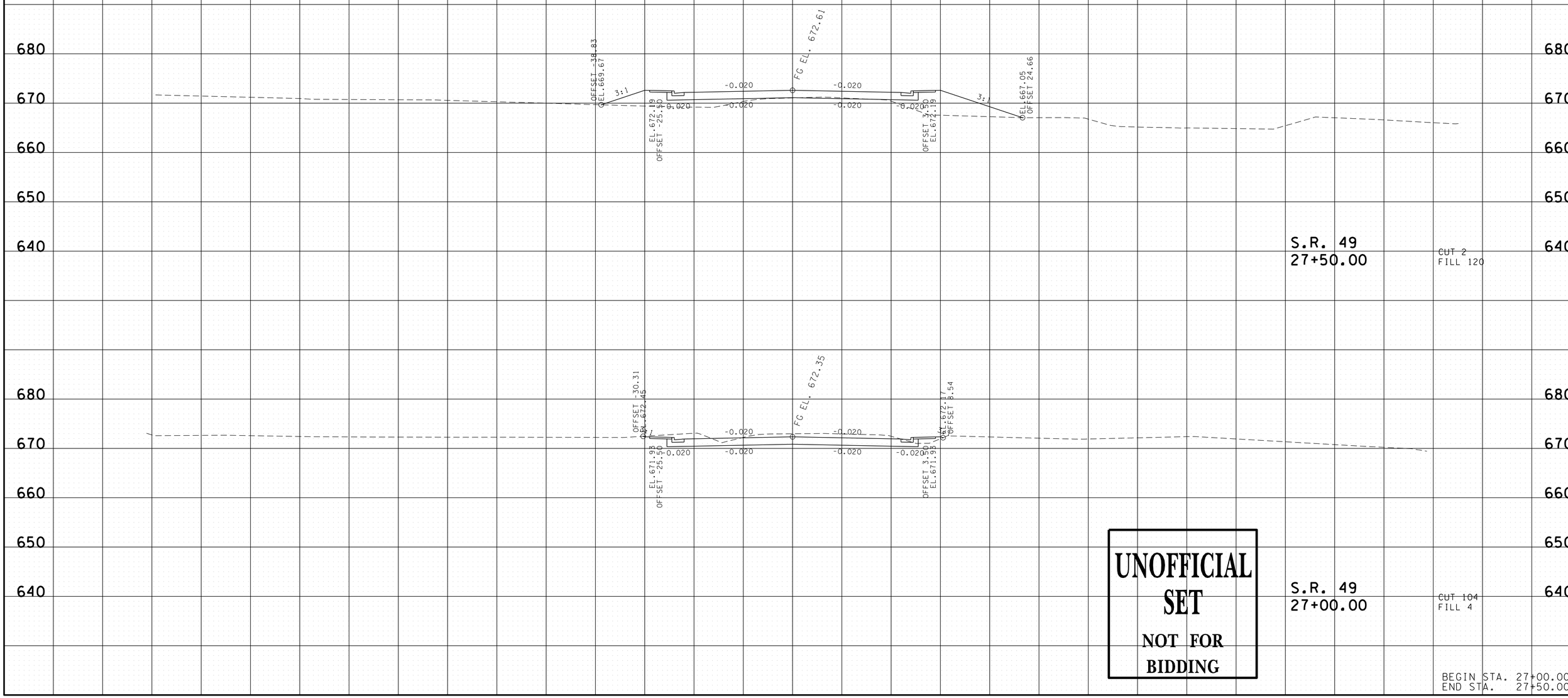

UNOFFICIAL SET
NOT FOR BIDDING

BEGIN STA. 27+00.00
END STA. 27+50.00

22-JAN-2014 15:03
\\JI03WF01.tdot.state.tn.us\03Shared\SURVEY\DESIGN\PIN 107847.00 Cheatham Co SR 49\SR049MainlineXSections.SHT

TYPE	YEAR	PROJECT NO.	SHEET NO.
R.O.W.	2012	STP-49(26)	35
CONST.	2014	STP-49(26)	37

TENNESSEE D.O.T.
DESIGN DIVISION

FILE NO.

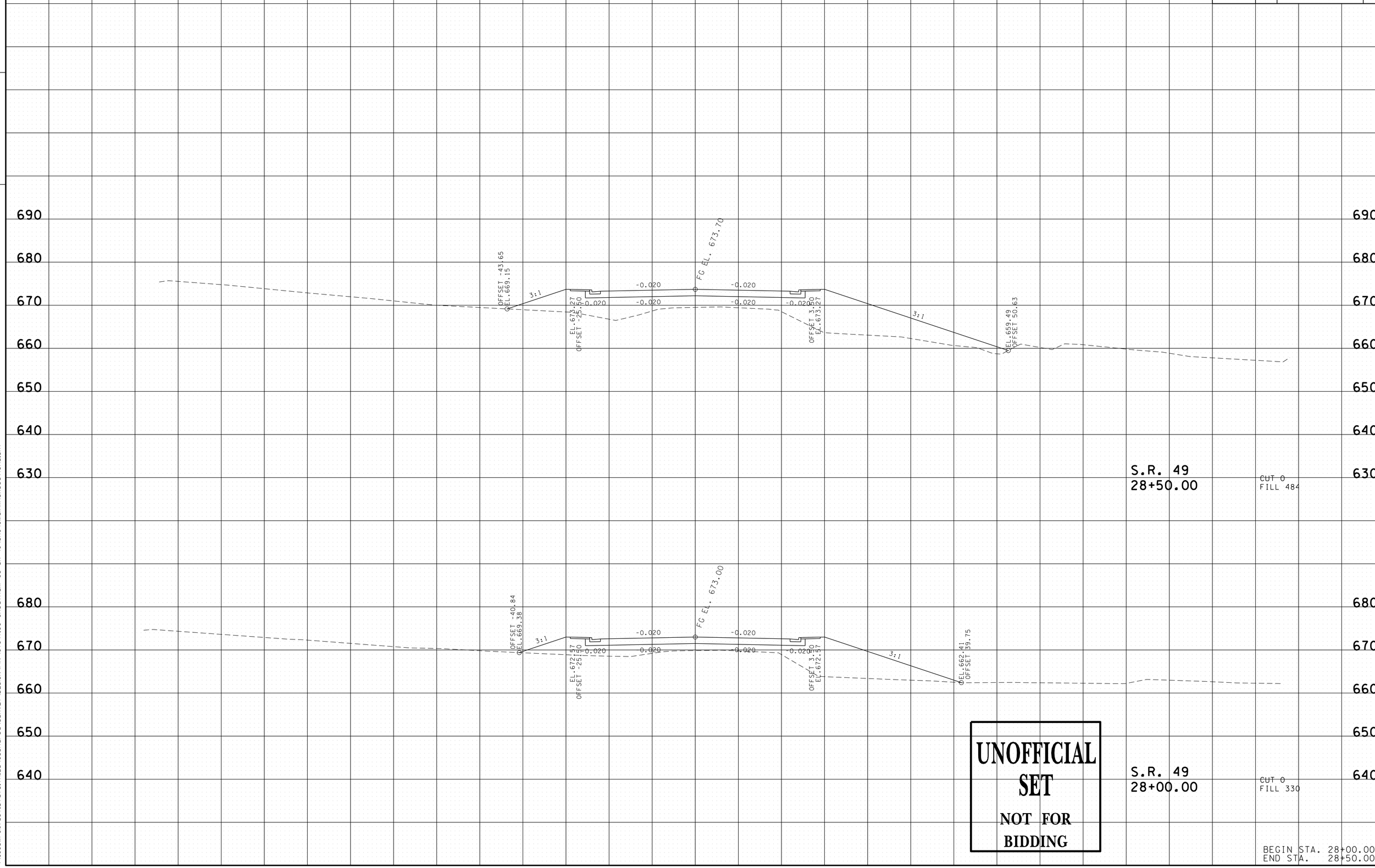

UNOFFICIAL SET
NOT FOR BIDDING

BEGIN STA. 28+00.00
END STA. 28+50.00

22-JAN-2014 15:03
\\JI03WF01.tdot.state.tn.us\03Shared\SURVEY\DESIGN\PIN 107847.00 Cheatham Co SR 49\SR049MainlineXSections.SHT

TYPE	YEAR	PROJECT NO.	SHEET NO.
R.O.W.	2012	STP-49(26)	36
CONST.	2014	STP-49(26)	38

FILE NO.

TENNESSEE D.O.T.
DESIGN DIVISION

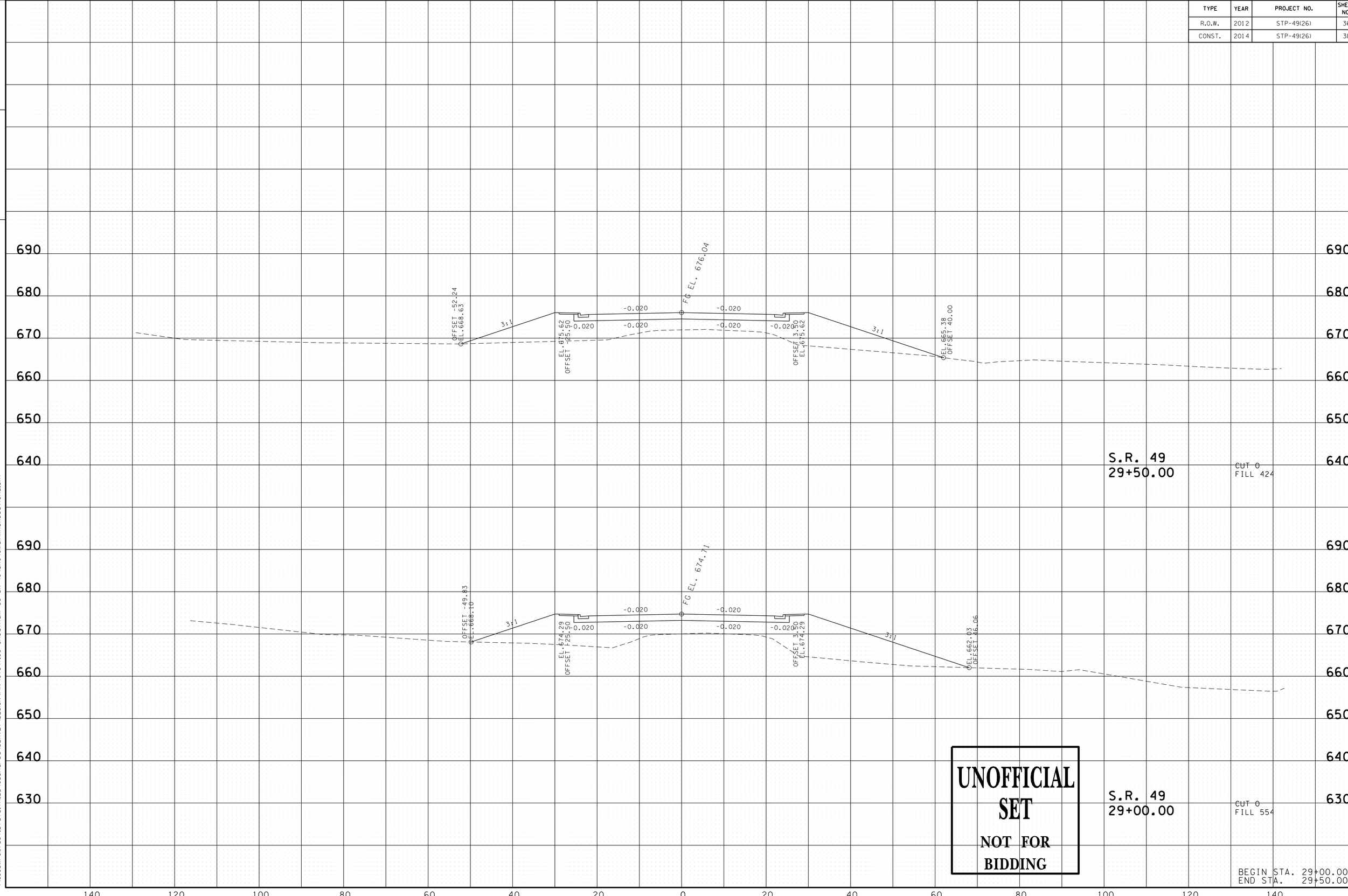

UNOFFICIAL SET
NOT FOR BIDDING

BEGIN STA. 29+00.00
END STA. 29+50.00

22-JAN-2014 15:03
\\JJ03WF01.tdot.state.tn.us\03Shared\SURVEY\DESIGN\PIN 107847.00 Cheatham Co SR 49\SR049MainlineXSections.SHT

TYPE	YEAR	PROJECT NO.	SHEET NO.
R.O.W.	2012	STP-49(26)	37
CONST.	2014	STP-49(26)	39

FILE NO.

TENNESSEE D.O.T.
DESIGN DIVISION

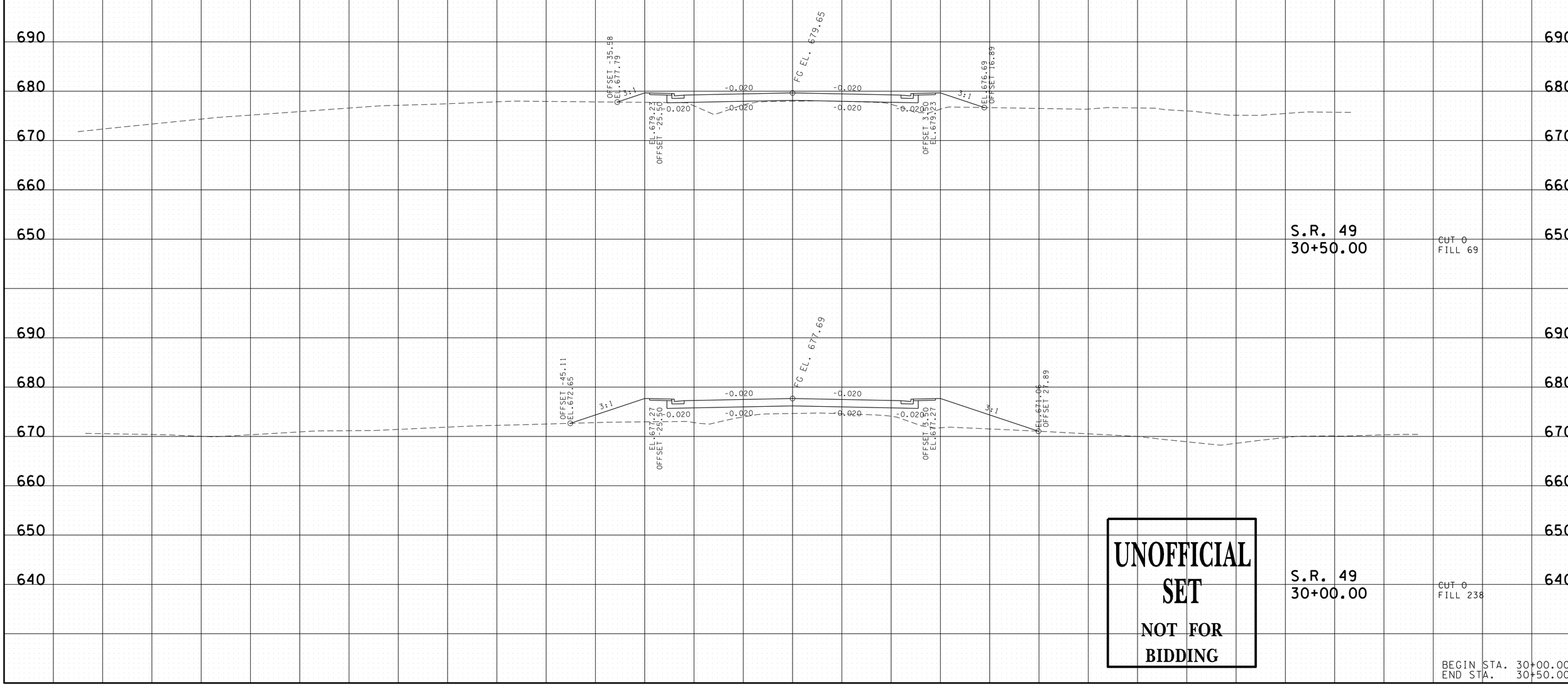

UNOFFICIAL SET
NOT FOR BIDDING

BEGIN STA. 30+00.00
END STA. 30+50.00

22-JAN-2014 15:03
\\JI03WF01.tdot.state.tn.us\03Shared\SURVEY\DESIGN\PIN 107847.00 Cheatham Co SR 49\SR049MainlineXSections.SHT

TYPE	YEAR	PROJECT NO.	SHEET NO.
R.O.W.	2012	STP-49(26)	38
CONST.	2014	STP-49(26)	40

FILE NO.

TENNESSEE D.O.T.
DESIGN DIVISION

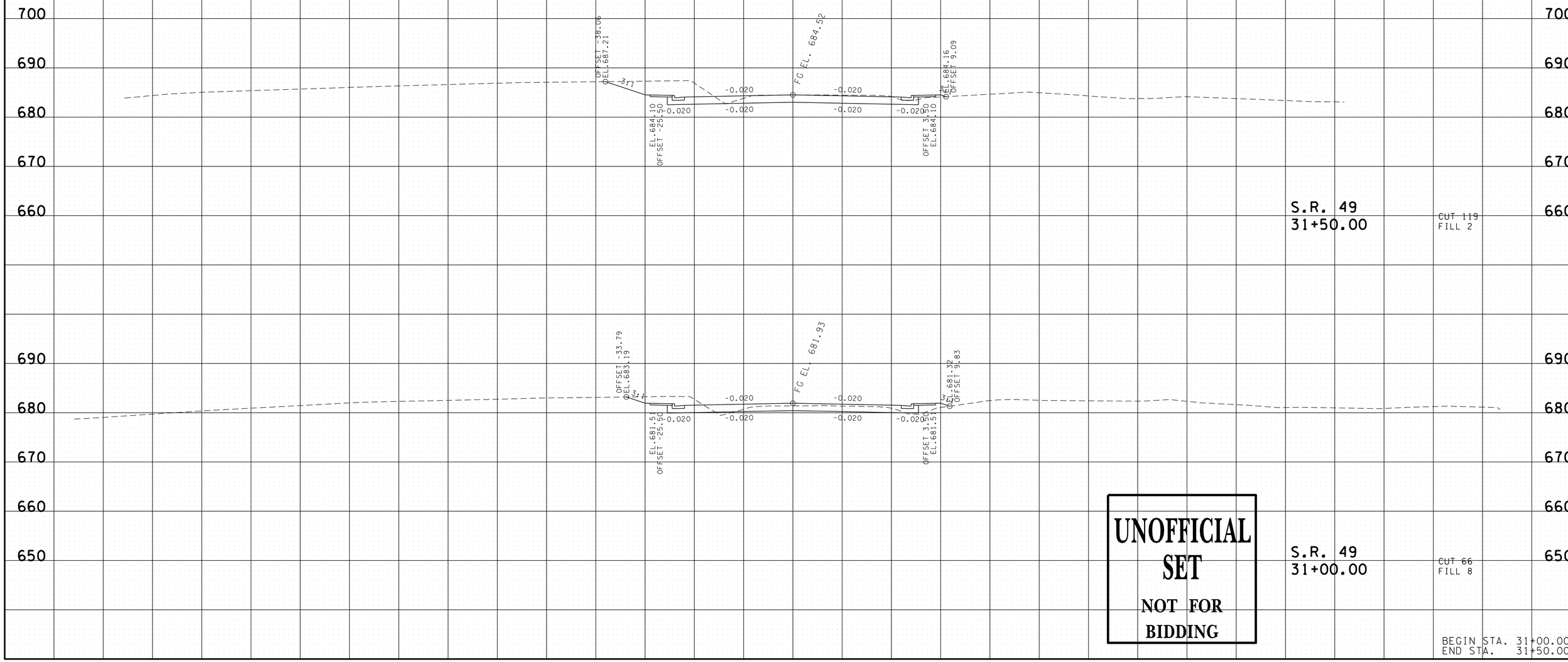

22-JAN-2014 15:03
\\JI03WF01.tdot.state.tn.us\03Shared\SURVEY\DESIGN\PIN 107847.00 Cheatham Co SR 49\SR049MainlineXSections.SHT

TYPE	YEAR	PROJECT NO.	SHEET NO.
R.O.W.	2012	STP-49(26)	39
CONST.	2014	STP-49(26)	41

TENNESSEE D.O.T.
DESIGN DIVISION
FILE NO.

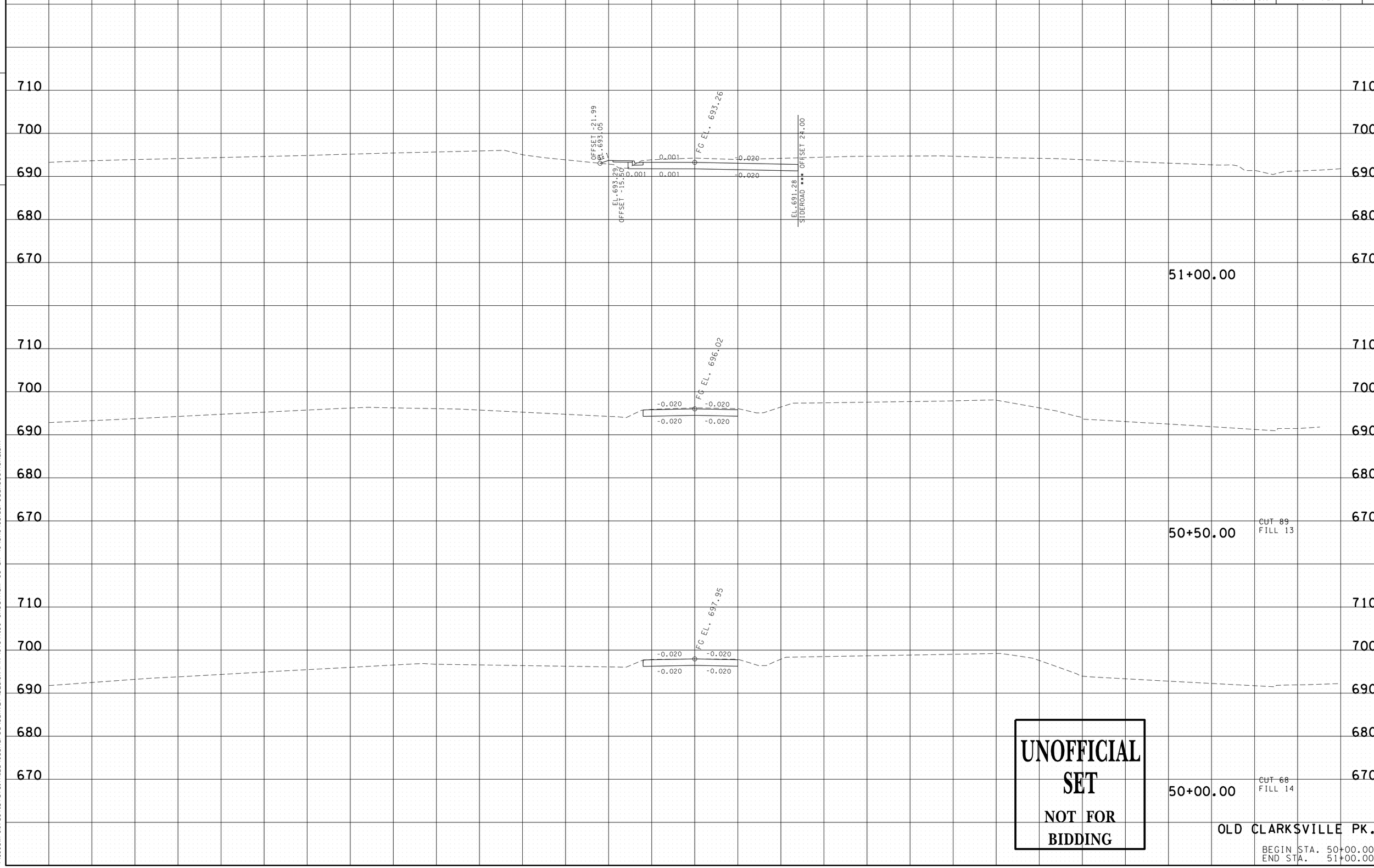

UNOFFICIAL SET
NOT FOR BIDDING

22-JAN-2014 15:03
\\JI03WF01.tdot.state.tn.us\03Shared\SURVEY\DESIGN\PIN 107847.00 Cheatham Co SR 49\SR049SideroadXSections.SHT

TYPE	YEAR	PROJECT NO.	SHEET NO.
R.O.W.	2012	STP-49(26)	40
CONST.	2014	STP-49(26)	42

FILE NO.

TENNESSEE D.O.T.
DESIGN DIVISION

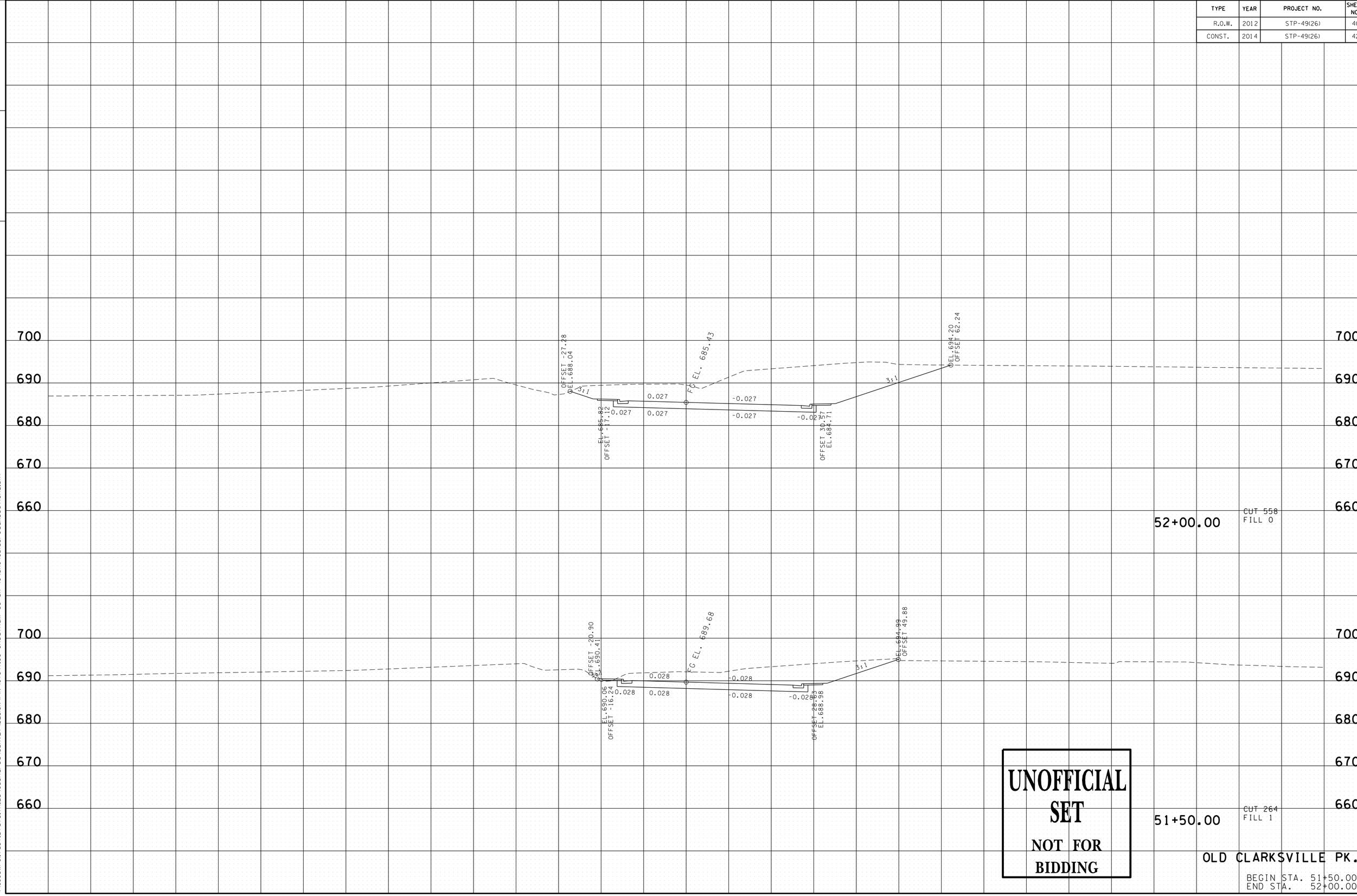

UNOFFICIAL SET
NOT FOR BIDDING

OLD CLARKSVILLE PK.

BEGIN STA. 51+50.00
END STA. 52+00.00

22-JAN-2014 15:03
\\JI03WF01.tdot.state.tn.us\03Shared\SURVEY\DESIGN\PIN 107847.00 Cheatham Co SR 49\SR049SideroadXSections.SHT

TYPE	YEAR	PROJECT NO.	SHEET NO.
R.O.W.	2012	STP-49(26)	41
CONST.	2014	STP-49(26)	43

TENNESSEE D.O.T.
DESIGN DIVISION

FILE NO.

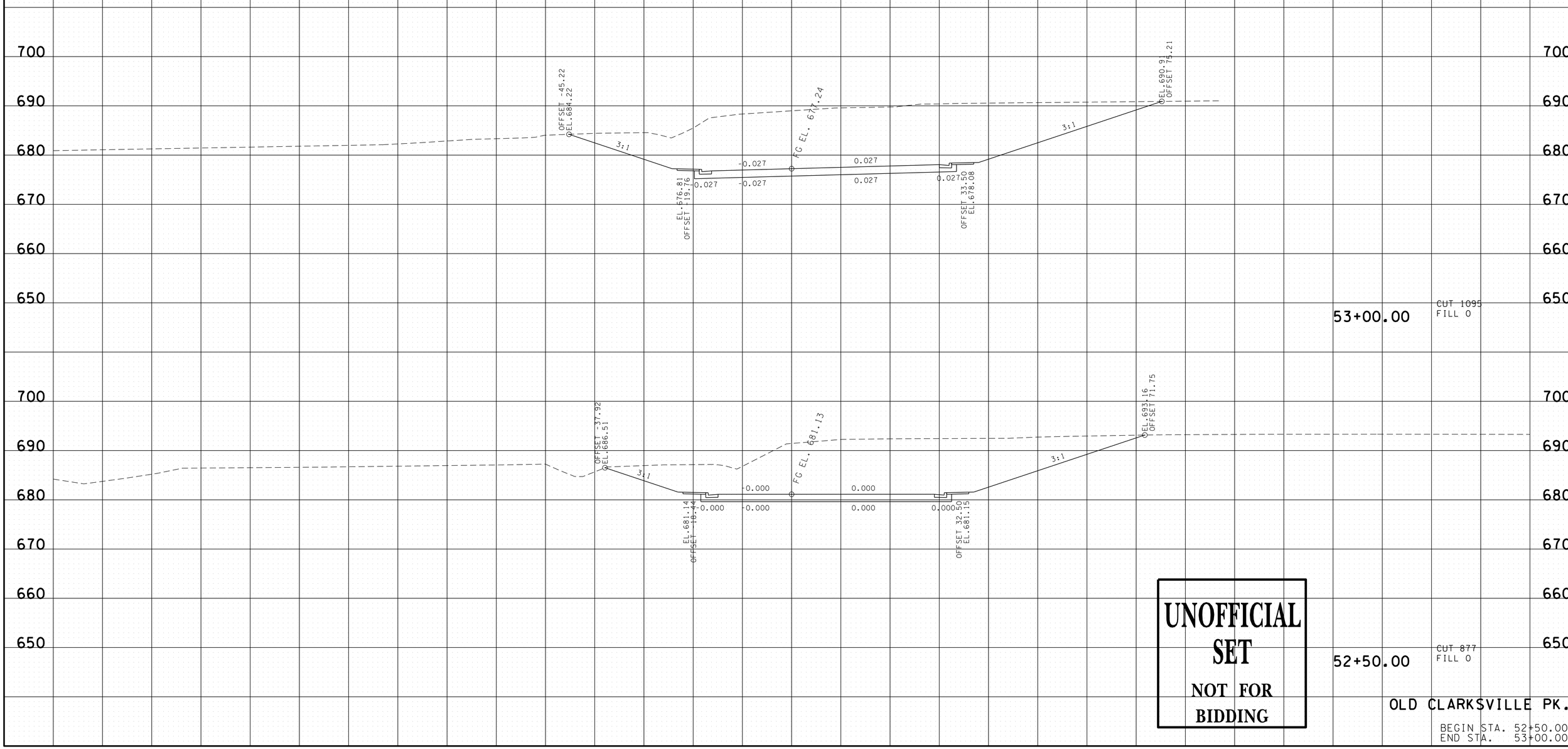

UNOFFICIAL SET
NOT FOR BIDDING

22-JAN-2014 15:03
\\JI03WF01.tdot.state.tn.us\03Shared\SURVEY\DESIGN\PIN 107847.00 Cheatham Co SR 49\SR049SideroadXSections.SHT

TYPE	YEAR	PROJECT NO.	SHEET NO.
R.O.W.	2012	STP-49(26)	42
CONST.	2014	STP-49(26)	44

FILE NO.

TENNESSEE D.O.T.
DESIGN DIVISION

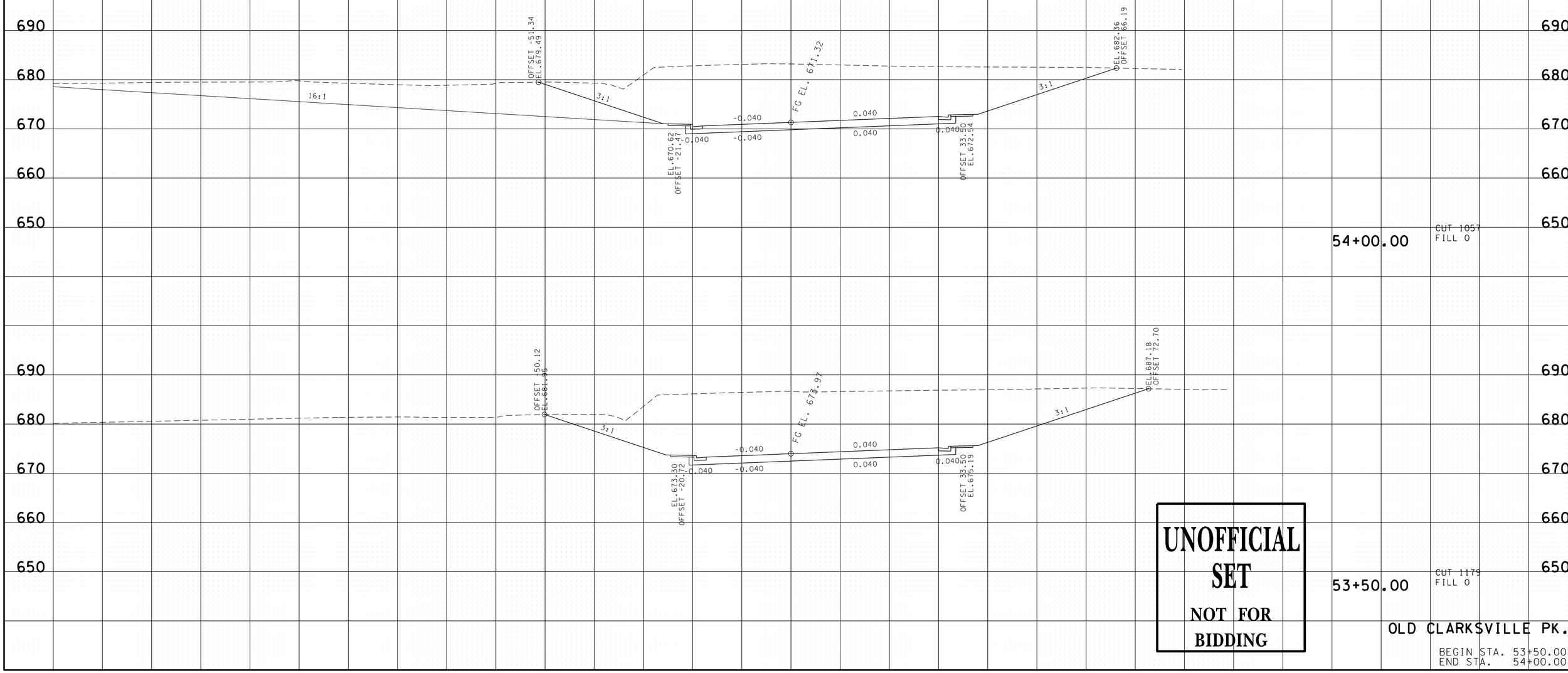

UNOFFICIAL SET
NOT FOR BIDDING

OLD CLARKSVILLE PK.

BEGIN STA. 53+50.00
END STA. 54+00.00

22-JAN-2014 15:03
\\JJ03WF01.tdot.state.tn.us\03Shared\SURVEY\DESIGN\PIN 107847.00 Cheatham Co SR 49\SR049SideroadXSections.SHT

TYPE	YEAR	PROJECT NO.	SHEET NO.
R.O.W.	2012	STP-49(26)	43
CONST.	2014	STP-49(26)	45

TENNESSEE D.O.T.
DESIGN DIVISION

FILE NO.

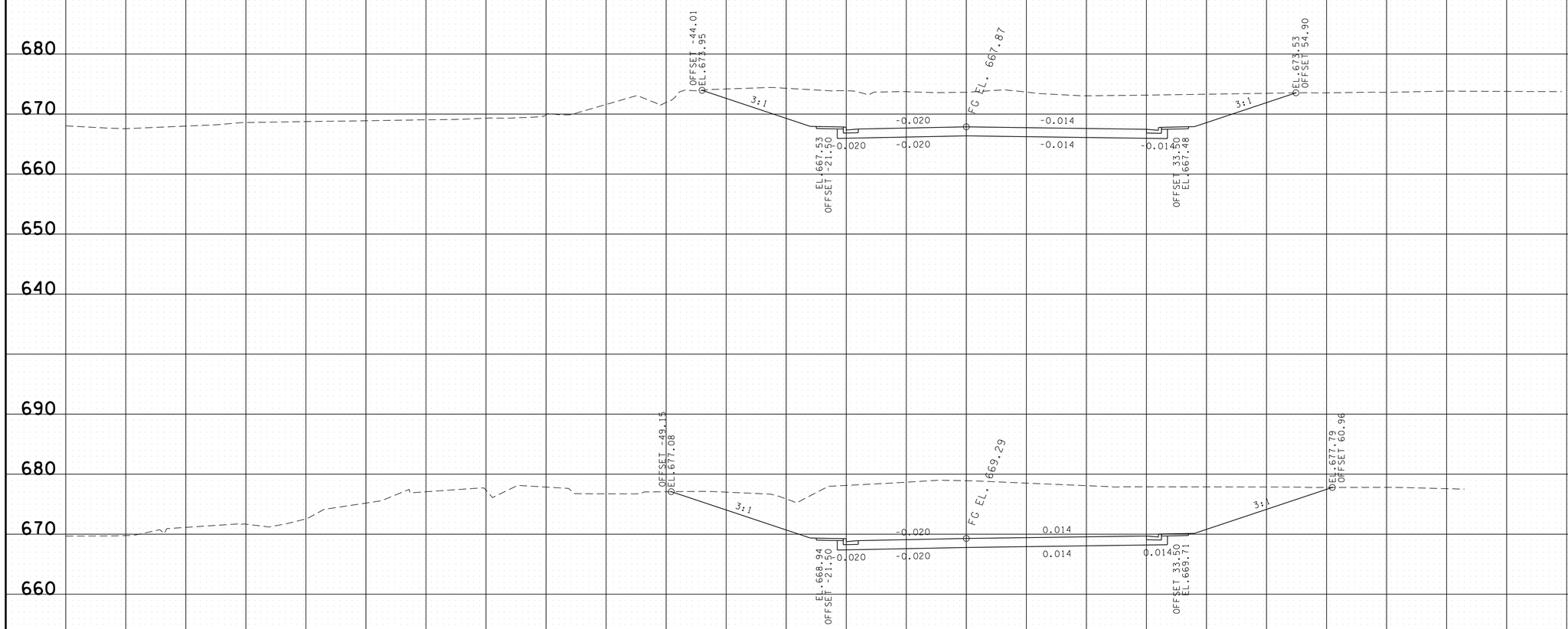

55+00.00

CUT 562
FILL 0

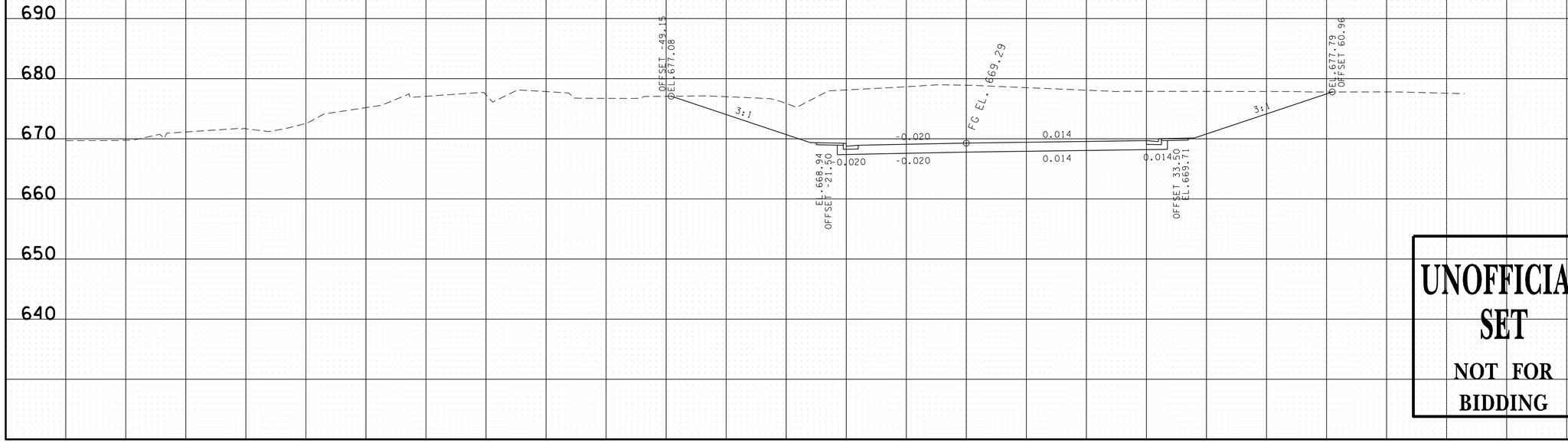

54+50.00

CUT 824
FILL 0

UNOFFICIAL SET
NOT FOR BIDDING

OLD CLARKSVILLE PK.

BEGIN STA. 54+50.00
END STA. 55+00.00

140 120 100 80 60 40 20 0 20 40 60 80 100 120 140

22-JAN-2014 15:03
\\JI03WF01.tdot.state.tn.us\03Shared\SURVEY\DESIGN\PIN 107847.00 Cheatham Co SR 49\SR049SideroadXSections.SHT

TYPE	YEAR	PROJECT NO.	SHEET NO.
R.O.W.	2012	STP-49(26)	44
CONST.	2014	STP-49(26)	46

TENNESSEE D.O.T.
DESIGN DIVISION
FILE NO.

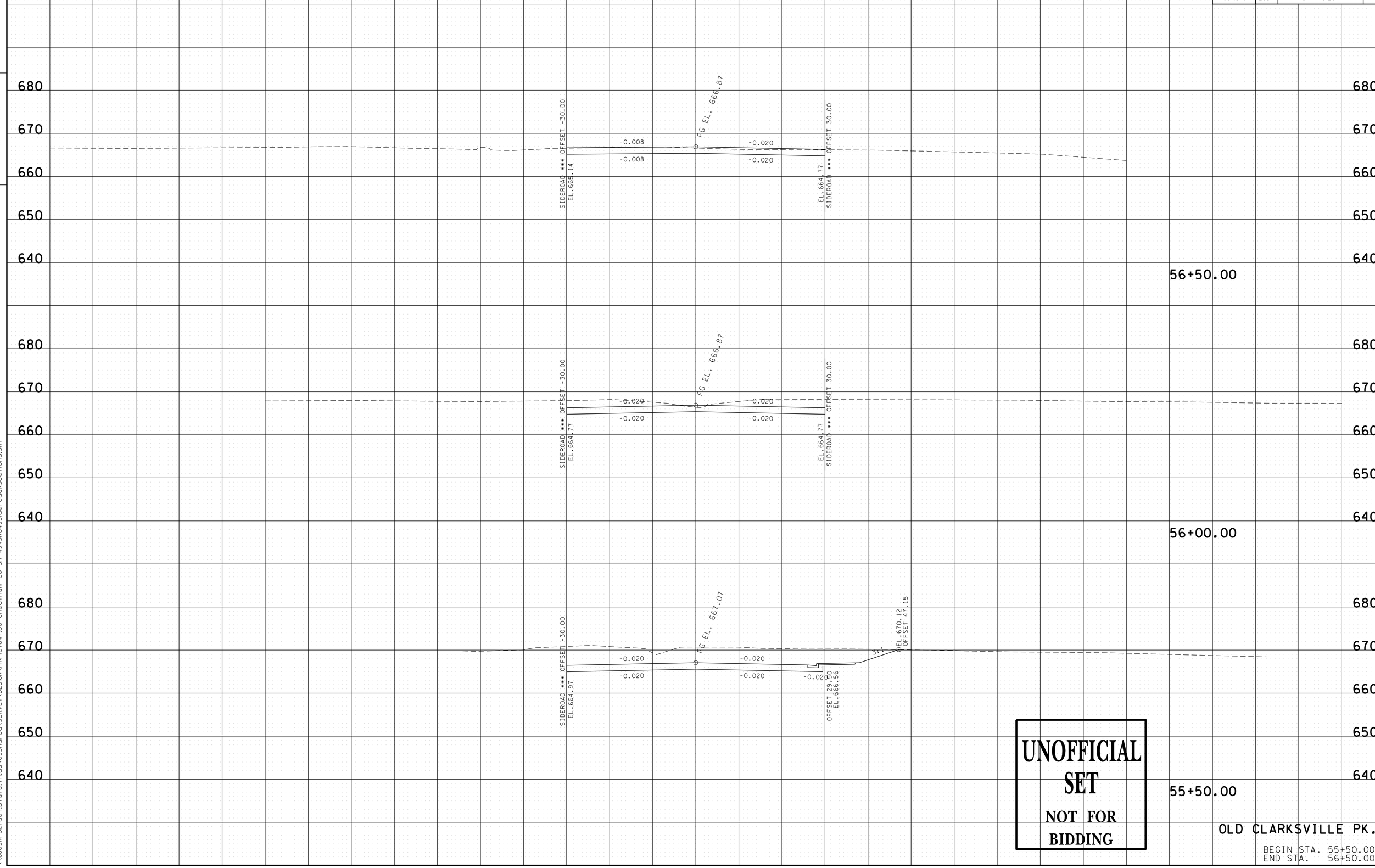

UNOFFICIAL SET
NOT FOR BIDDING

OLD CLARKSVILLE PK.

BEGIN STA. 55+50.00
END STA. 56+50.00

22-JAN-2014 15:03
\\JJ03WF01.tdot.state.tn.us\03Shared\SURVEY\DESIGN\PIN 107847.00 Cheatham Co SR 49\SR049SideroadXSections.SHT

TYPE	YEAR	PROJECT NO.	SHEET NO.
R.O.W.	2012	STP-49(26)	45
CONST.	2014	STP-49(26)	47

TENNESSEE D.O.T.
DESIGN DIVISION

FILE NO.

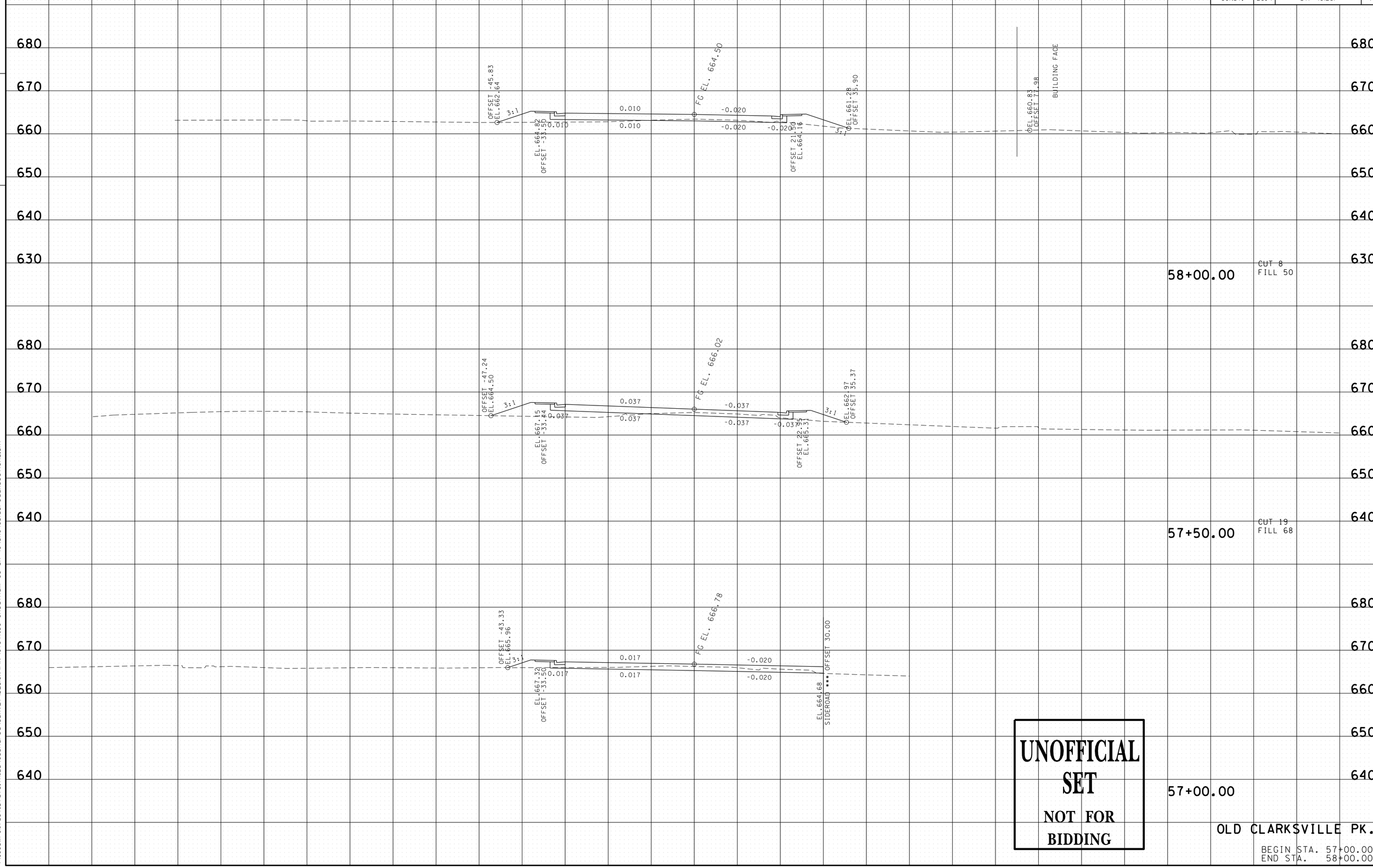

UNOFFICIAL SET
NOT FOR BIDDING

OLD CLARKSVILLE PK.

BEGIN STA. 57+00.00
END STA. 58+00.00

22-JAN-2014 15:03
\\JJ03WF01.tdot.state.tn.us\03Shared\SURVEY\DESIGN\PIN 107847.00 Cheatham Co SR 49\SR049SideroadXSections.SHT

TYPE	YEAR	PROJECT NO.	SHEET NO.
R.O.W.	2012	STP-49(26)	46
CONST.	2014	STP-49(26)	48

FILE NO.

TENNESSEE D.O.T.
DESIGN DIVISION

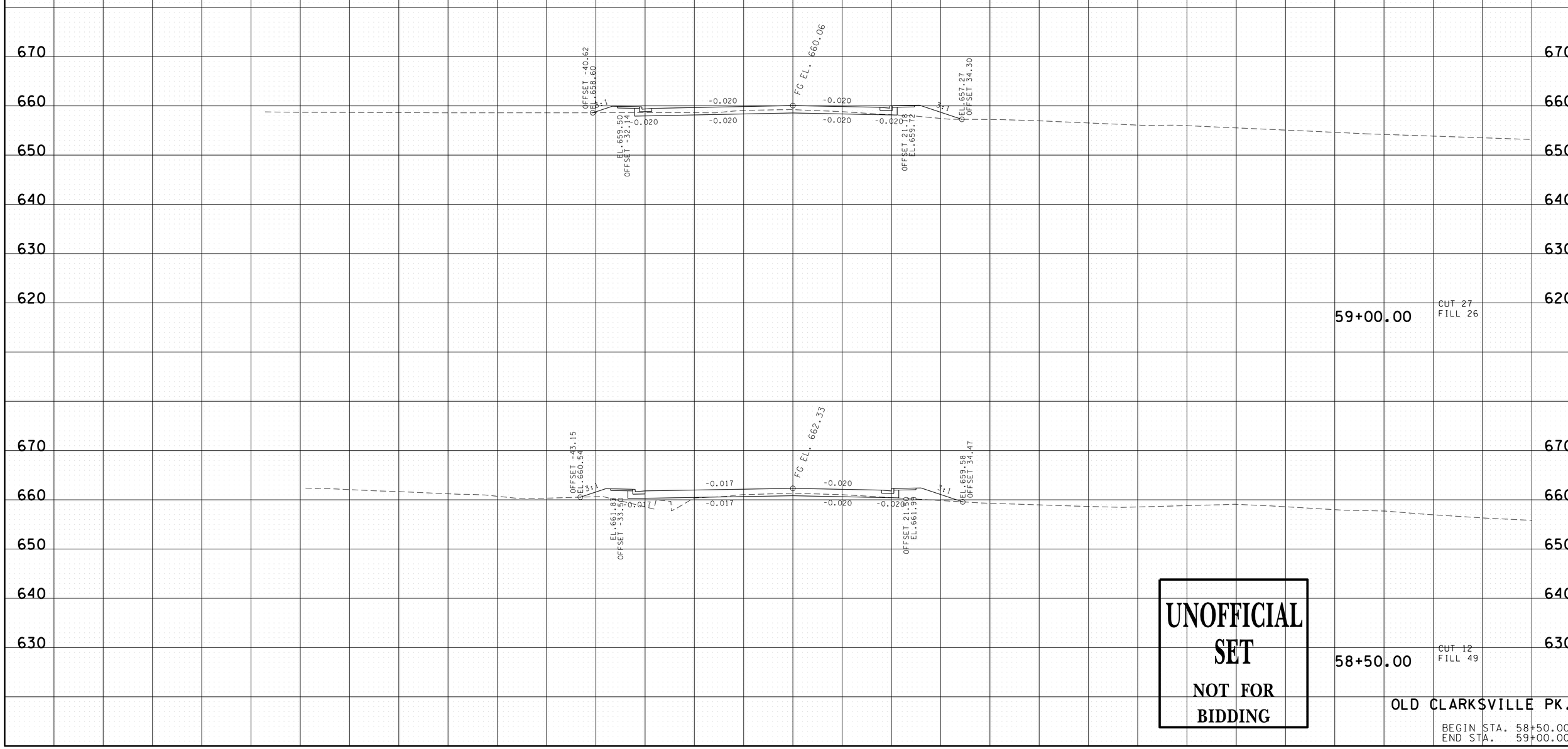

UNOFFICIAL SET
NOT FOR BIDDING

OLD CLARKSVILLE PK.

BEGIN STA. 58+50.00
END STA. 59+00.00

22-JAN-2014 15:03
\\JI03WF01.tdot.state.tn.us\03Shared\SURVEY\DESIGN\PIN 107847.00 Cheatham Co SR 49\SR049SideroadXSections.SHT

TYPE	YEAR	PROJECT NO.	SHEET NO.
R.O.W.	2012	STP-49(26)	47
CONST.	2014	STP-49(26)	49

FILE NO.

TENNESSEE D.O.T.
DESIGN DIVISION

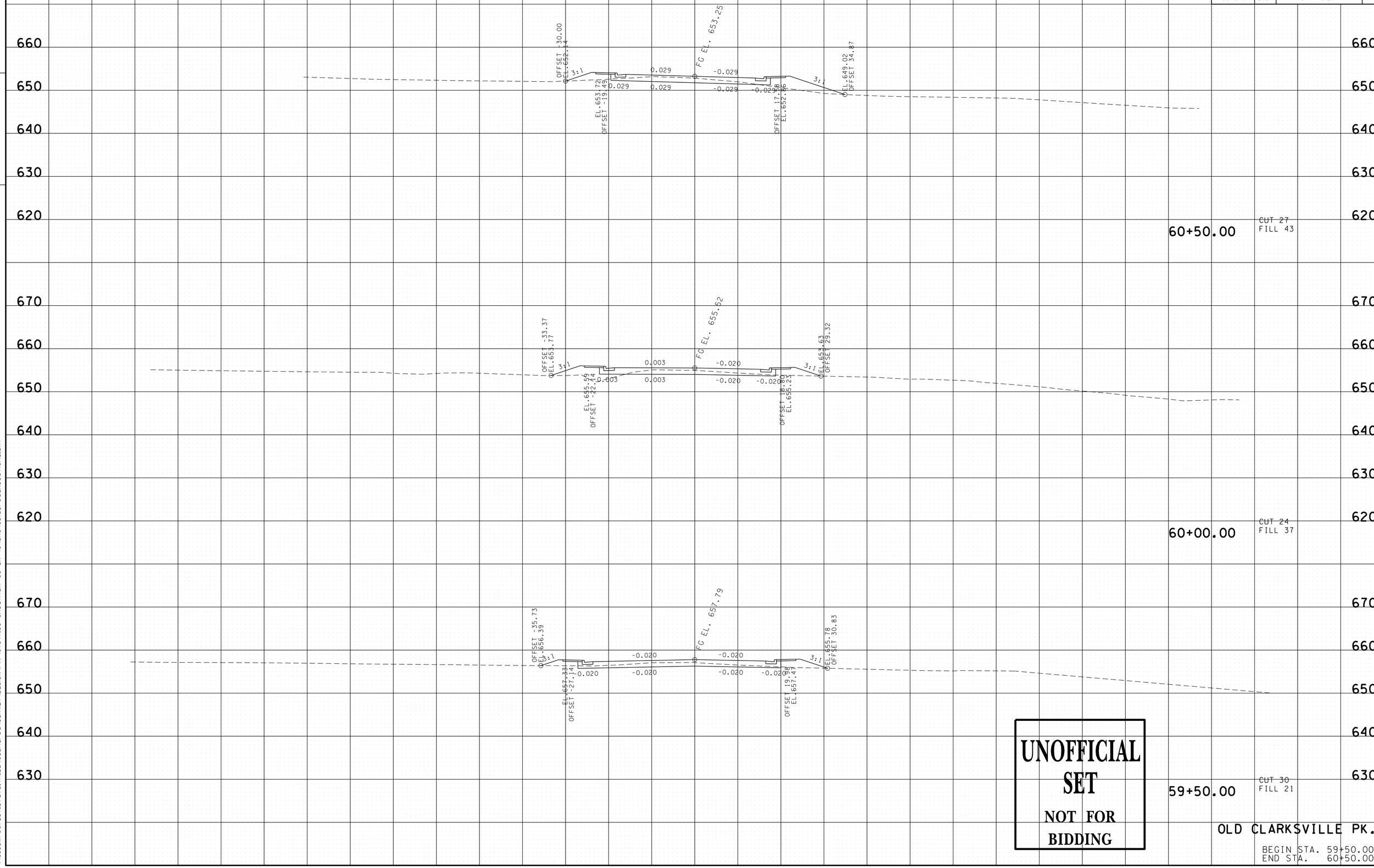

UNOFFICIAL SET
NOT FOR BIDDING

OLD CLARKSVILLE PK.

BEGIN STA. 59+50.00
END STA. 60+50.00

22-JAN-2014 15:03
\\JI03WF01.tdot.state.tn.us\03Shared\SURVEY\DESIGN\PIN 107847.00 Cheatham Co SR 49\SR049SideroadXSections.SHT

TYPE	YEAR	PROJECT NO.	SHEET NO.
R.O.W.	2012	STP-49(26)	48
CONST.	2014	STP-49(26)	50

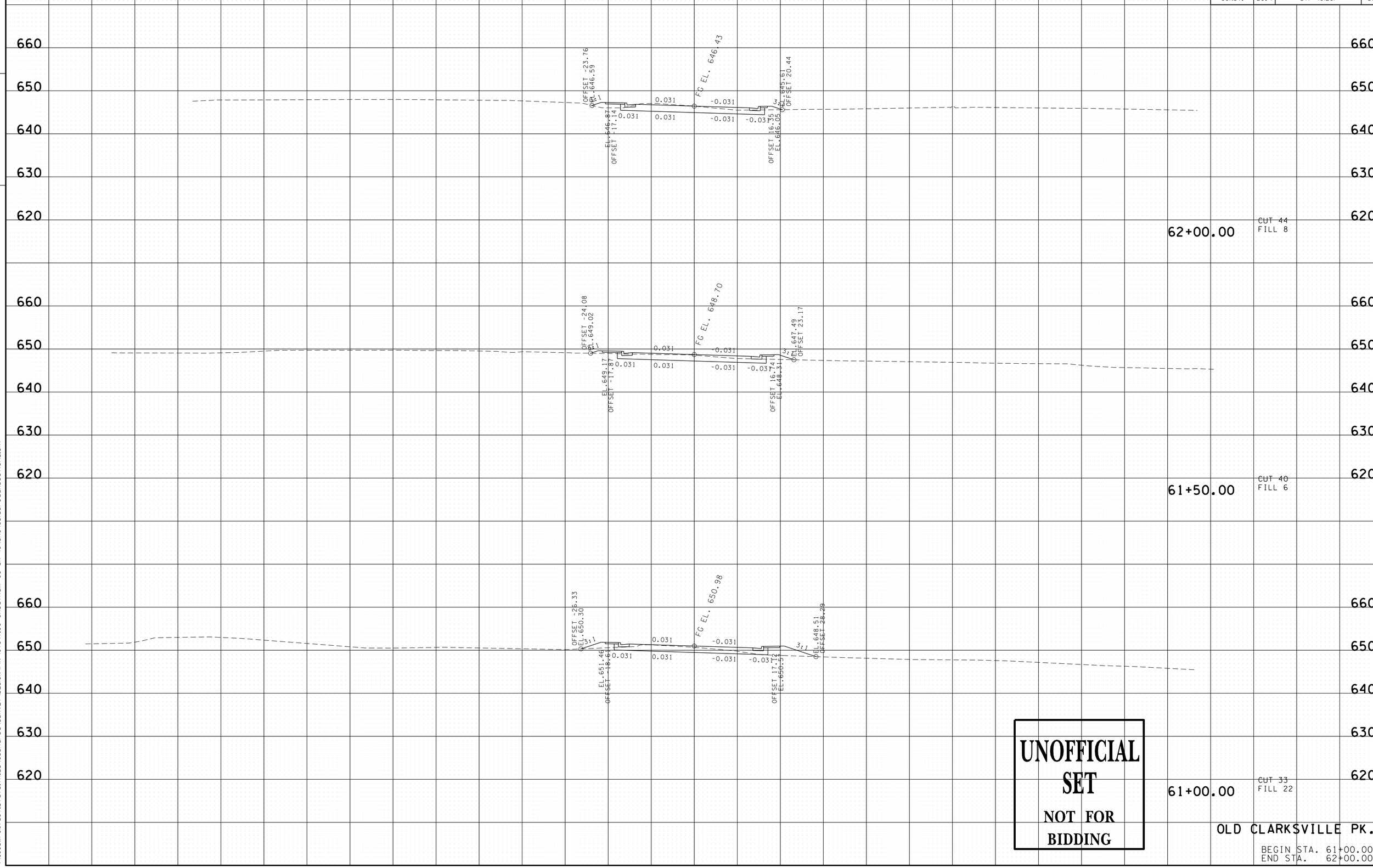

UNOFFICIAL SET
NOT FOR BIDDING

OLD CLARKSVILLE PK.

BEGIN STA. 61+00.00
END STA. 62+00.00

TENNESSEE D.O.T.
DESIGN DIVISION

FILE NO.

22-JAN-2014 15:03
\\JJ03WF01.tdot.state.tn.us\03Shared\SURVEY\DESIGN\PIN 107847.00 Cheatham Co SR 49\SR049SideroadXSections.SHT