PROJECT NO.	YEAR	SHEET NO.
73100-4104-04	2007 ①	

REVISIONS

NO.	DATE	BY	BRIEF DESCRIPTION
1		RC	REVISED DATE & REVISED LAST REV. DATE

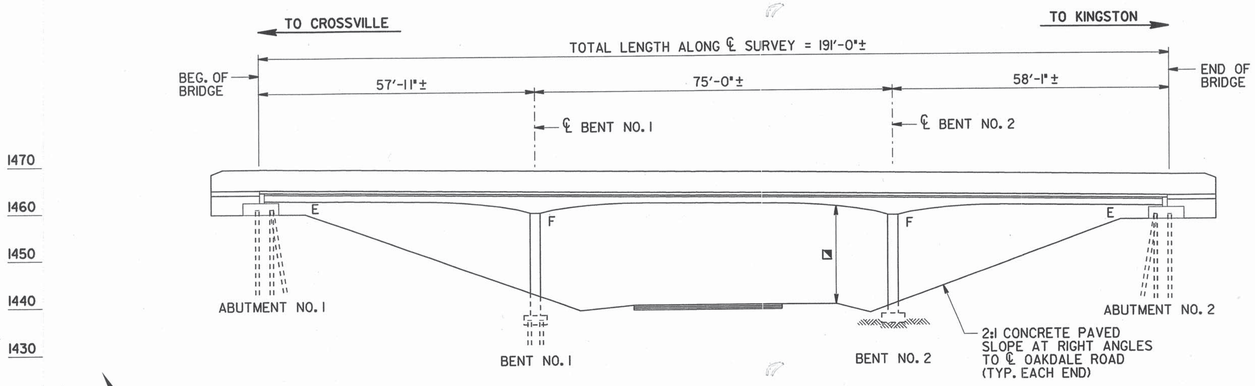

ELEVATION

E DENOTES: EXPANSION
F DENOTES: FIXED

NOTE: EXISTING AND PROPOSED SUPPORT CONDITIONS TO REMAIN THE SAME.

◪ DENOTES: 14'-6" MINIMUM VERTICAL CLEARANCE.

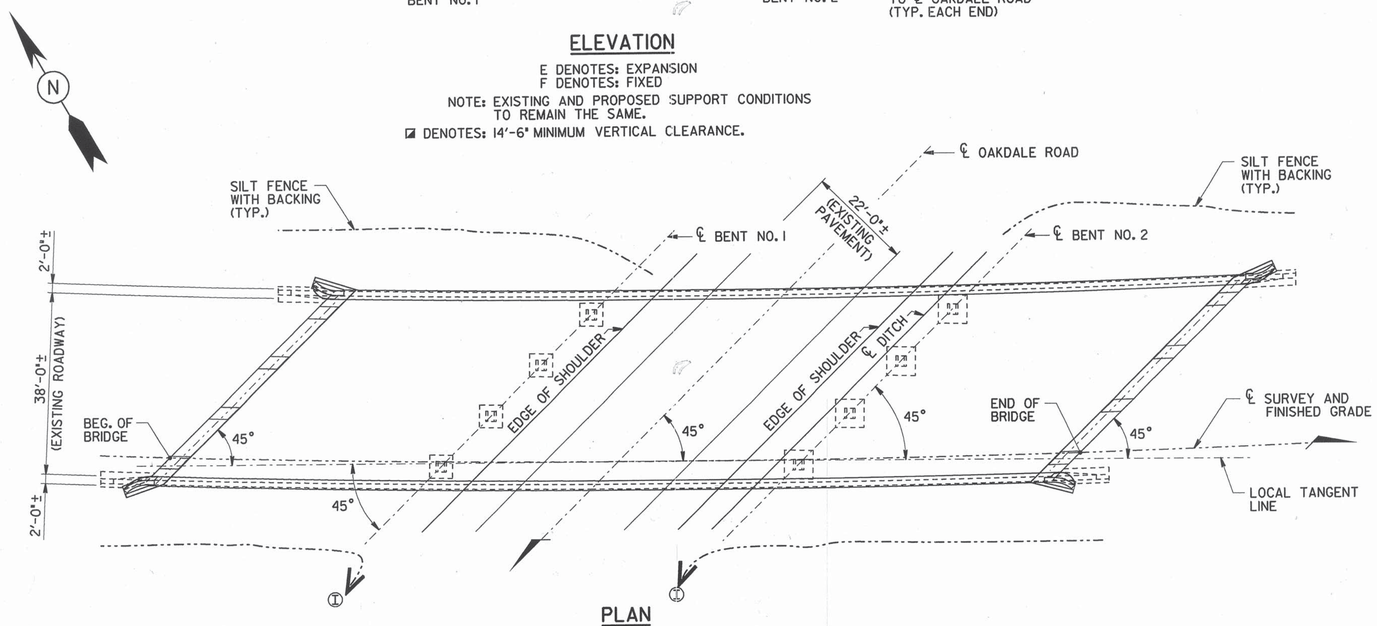

PLAN

GENERAL SCOPE OF WORK

1) PROVIDE REQUIRED TRAFFIC CONTROL TO MAINTAIN ONE LANE OF TRAFFIC ON THE EXISTING BRIDGE AND ONE LANE OF TRAFFIC ON OAKDALE ROAD (NFA 1203).

2) REMOVE EXISTING 6½"± ASPHALT OVERLAY FOR ENTIRE LENGTH OF BRIDGE AND FOR A 350 FOOT TRANSITION LENGTH BEYOND EACH BRIDGE END. SEE DETAIL ON SHEET 2B.

3) CONSTRUCT NEW 3" ASPHALT OVERLAY WITH DECK SEALANT APPLIED DIRECTLY TO CONCRETE DECK (PER MANUFACTURES REQUIREMENTS) AND NEW ASPHALT APPROACH TRANSITION AS SHOWN ON SHEET 2B AND DWG. NO. BR-79-3.

4) RECONSTRUCT CONCRETE SLAB IN AREAS OF FULL AND PARTIAL DEPTH DECK REPAIRS WITHIN LIMITS DESIGNATED BY THE ENGINEER AS SHOWN IN DETAIL ON DWG. NO. BR-79-10.

5) REPAIR CONCRETE SURFACE DEFECTS ON EXISTING ABUTMENTS, BENTS, CANTILEVERS AND ENDPOSTS BY CHIPPING TO SOUND CONCRETE AND PATCHING BACK TO ORIGINAL LINES WITH OPTION OF POLYMER MODIFIED CEMENTITIOUS PATCHING MATERIAL OR HIGH EARLY STRENGTH CONCRETE DEPENDING ON DEPTH OF DETERIORATION. SEE DETAILS ON DWG. NOS. BR-79-4, BR-79-8 AND BR-79-9.

6) EPOXY INJECT CRACKED CONCRETE AT ABUTMENT NO. 1 AND BEAMS. SEE DETAILS AND NOTES ON DWG. NOS. BR-79-4 AND BR-79-8.

7) AN APPLIED TEXTURE FINISH SHALL BE APPLIED TO PARAPETS, ENDPOSTS, CANTILEVERS, BEAMS AND ALL EXPOSED ABUTMENT AND BENT SURFACES. SEE DETAIL AND NOTES ON DWG. NO. BR-79-2.

8) REPAIR AREAS OF FILL SETTLEMENT OR EROSION UNDER ABUTMENT NO. 1. SEE DETAILS AND NOTES ON DWG. NO. BR-79-8.

9) REPAIR EXISTING ABUTMENT BACKWALLS BY DRILLING AND GROUTING REINFORCING STEEL INTO EXISTING BEAMS. POUR BACK USING 18 HOUR CONCRETE. SEE DETAILS ON DWG. NOS. BR-79-5, BR-79-6 AND BR-79-7.

10) INSTALL NEW DELINEATORS ON TOP OF EXISTING PARAPET AS SHOWN ON STD. DWG. NO. STD-1-1. COST TO BE INCLUDED IN ITEMS BID ON.

11) REMOVE DEBRIS AND CLEAN OUT PAVED DITCHES AT BOTTOM OF SLOPE PAVING.

12) ONCE TRAFFIC IS REDUCED TO ONE LANE, THE CONTRACTOR SHALL WORK CONTINUOUSLY UNTIL TRAFFIC CAN BE RESTORED TO TWO LANES.

① LIST OF DRAWINGS

DWG. NO.	LAST REV. DATE	DRAWING
BR-79-1		LAYOUT OF BRIDGE TO BE REPAIRED
BR-79-2		GENERAL NOTES AND ESTIMATED BRIDGE QUANTITIES
BR-79-3		SUPERSTRUCTURE
BR-79-4		SUPERSTRUCTURE DETAILS
BR-79-5		ABUTMENT NO. 1
BR-79-6		ABUTMENT NO. 2
BR-79-7		ABUTMENT NO. 1 AND NO. 2 DETAILS
BR-79-8		ABUTMENT REPAIR DETAILS
BR-79-9		BENT REPAIR DETAILS
BR-79-10		MISCELLANEOUS REPAIR DETAILS

LIST OF STANDARD DRAWINGS

DWG. NO.	LAST REV. DATE	DRAWING
STD-1-1	7-31-00	BRIDGE RAILING CONCRETE PARAPET - 1990

* LIST OF REFERENCE DRAWINGS

DWG. NO.	DRAWING
K-58-7 THRU K-58-12	EXISTING BRIDGE PLANS

LIST OF SPECIAL PROVISIONS

NO.	LAST REV. DATE	REGARDING
105A	**	APPROVAL OF SHOP DRAWINGS
108B	**	PROJECT COMPLETION AND LIQUIDATED DAMAGES

* DENOTES: THESE DRAWINGS ARE TO BE PRINTED WITH PLANS.
** DENOTES: CURRENT REVISION DATE, AS PER CONTRACT DOCUMENTS.

2006 ADT = 37,305
POSTED SPEED LIMIT = 70 M.P.H.

STATE OF TENNESSEE
DEPARTMENT OF TRANSPORTATION

LAYOUT OF BRIDGE TO BE REPAIRED
INTERSTATE 40
OVER
OAKDALE ROAD (NFA 1203)
BRIDGE NO. 73-I40-1.08
ROANE COUNTY
2007 ①

BR-79-1

DESIGNED BY BILBREY, JEKABSONS DATE 1/06
DRAWN BY STARNES, WILSON DATE 1/06
SUPERVISED BY BILBREY, BARTHOLOMEW DATE 1/06
CHECKED BY JEKABSONS DATE 1/06

SCANNED
A1Starnes
1/06/2006
USER: 1
Plot Legend: 1
Dir: LOCAL(FULL)SDON\S777.2464356.0000.----2464356\0000.A1Starnes.prf