PROJECT NO.	YEAR	SHEET NO.
73100-4104-04	2007 1	

REVISIONS

NO.	DATE	BY	BRIEF DESCRIPTION
1		RC	REVISED DATE

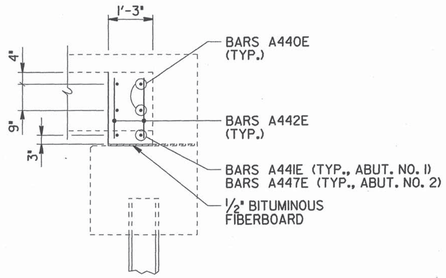

SECTION "A-A"

(TYP. BETWEEN BEAMS A, B, C AND D)

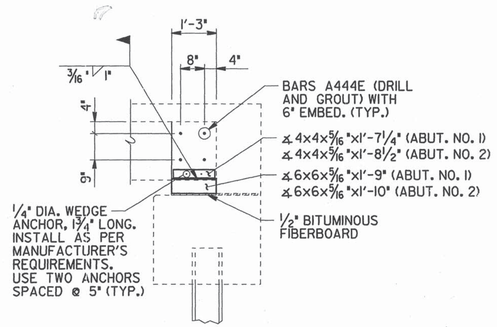

SECTION "B-B"

(TYP. AT FACE OF EXISTING BEAMS AT INTERIOR BAYS)

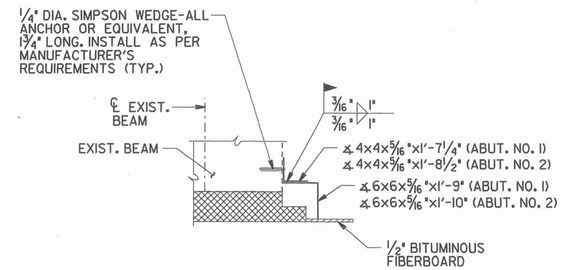

DETAIL "Z"

NOTE: COST OF ALL ANGLES, WEDGE ANCHORS AND WELDING TO BE INCLUDED IN THE COST OF OTHER ITEMS BID ON.

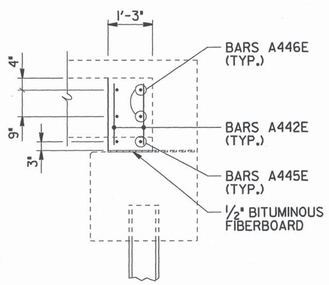

SECTION "C-C"

(TYP. AT EXTERIOR BAYS)

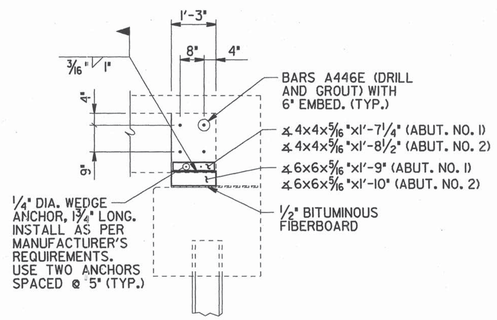

SECTION "D-D"

(TYP. AT FACE OF EXISTING BEAMS AT EXTERIOR BAYS)

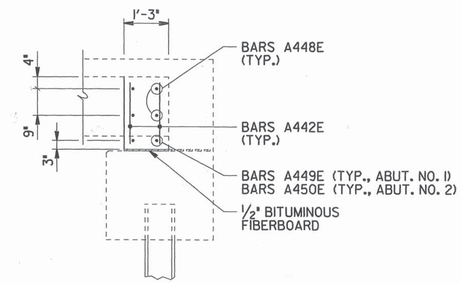

SECTION "E-E"

(TYP. BETWEEN BEAMS B AND C)

BILL OF STEEL

BAR	SIZE	NO. REQ'D.	LENGTH
A440E	4	16	11'-4"
A441E	4	4	10'-4"
A442E	4	168	1'-4"
A443E	4	32	10"
A444E	4	48	3'-3"
A445E	4	8	1'-9"
A446E	4	16	3'-0"
A447E	4	4	11'-1"
A448E	4	16	5'-8"
A449E	4	8	5'-2"
A450E	4	8	5'-6"

NOTE: BARS A448E, A449E AND A450E THREADED ONE END.

NOTE: ALL REINFORCING STEEL SHALL BE EPOXY COATED. THE COST OF EPOXY COATED REINFORCING STEEL TO BE INCLUDED IN ITEM NO. 604-10.18, REINFORCING STEEL (REPAIRS), LBS.

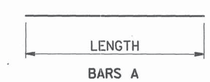

STATE OF TENNESSEE
DEPARTMENT OF TRANSPORTATION

ABUTMENT NO. 1 AND NO. 2 DETAILS
INTERSTATE 40
OVER
OAKDALE ROAD (NFA 1203)
BRIDGE NO. 73-I40-1.08
ROANE COUNTY
2007 1

BR-79-7

DESIGNED BY BILBREY, JEKABSONS DATE 1/06
DRAWN BY STARNES, WILSON DATE 1/06
SUPERVISED BY BILBREY, BARTHOLOMEW DATE 1/06
CHECKED BY JEKABSONS DATE 1/06

SCANNED