PROJECT NO.	YEAR	SHEET NO.
73100-4117-04	2014	

REVISIONS

NO.	DATE	BY	BRIEF DESCRIPTION

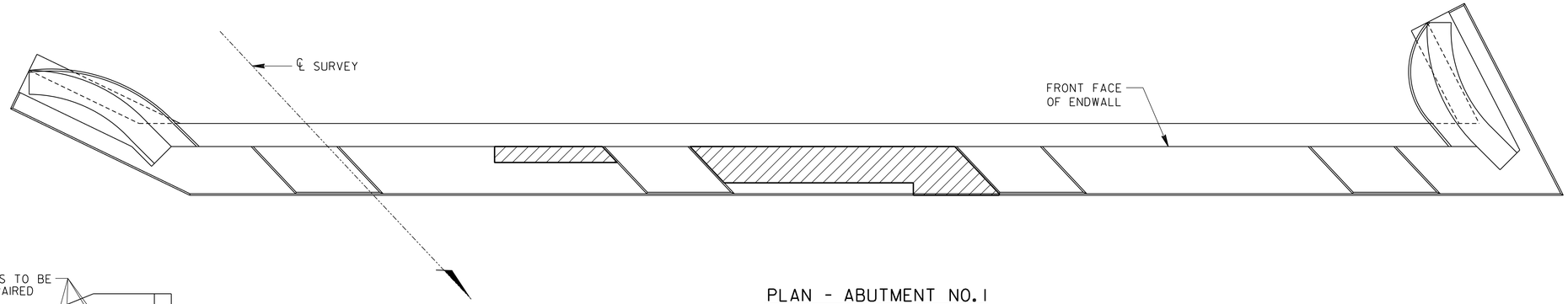

PLAN - ABUTMENT NO. 1

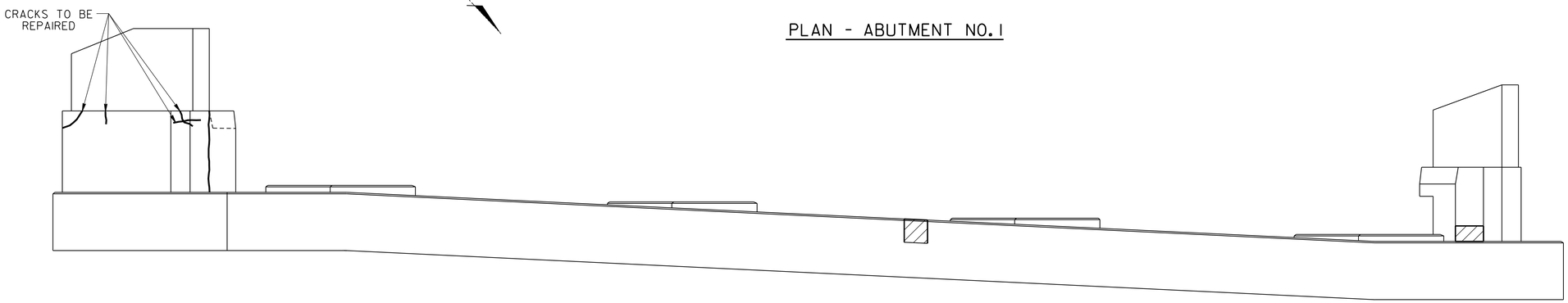

ELEVATION - ABUTMENT NO. 1
(LOOKING BACK ON SURVEY)

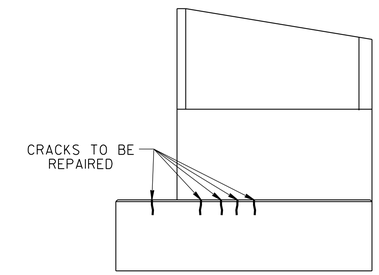

ELEVATION - LEFT WING
(ABUTMENT NO. 1)

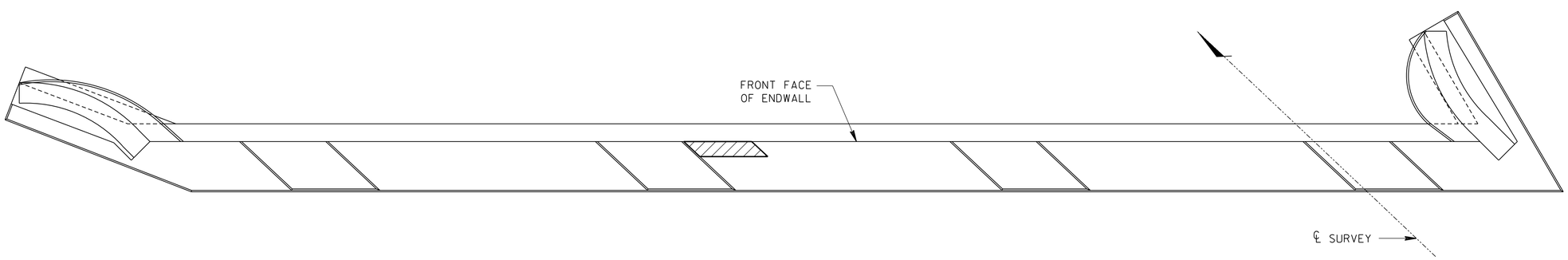

PLAN - ABUTMENT NO. 2

ESTIMATED ABUTMENT REPAIRS

LOCATION OF REPAIR	ITEM NO. 604-10.05 AND/OR 604-10.54 APPROX. REPAIR AREAS (S.F.)	ITEM NO. 604-10.62 APPROX. REPAIR AREAS (L.F.)
ABUT. NO. 1	29	9
ABUT. NO. 2	3	-

DENOTES: APPROXIMATE AREA TO BE REPAIRED UNDER ITEM NO. 604-10.05 AND/OR 604-10.54. SEE REPAIR DETAILS ON DWG. NO. BR-116-99.

DENOTES: CRACK TO BE EPOXY INJECTED. QUANTITIES AND LOCATIONS GIVEN ARE APPROXIMATE. AND SHALL BE BID WITH THE CONTINGENCY THAT THEY MAY BE INCREASED, DECREASED, OR ELIMINATED BY THE ENGINEER. SEE EPOXY INJECTION NOTES ON DWG. NO. BR-116-99.

NOTE: THE CONTRACTOR SHALL BE SOLELY RESPONSIBLE FOR THE STABILITY OF THE STRUCTURE DURING REPAIRS.

STATE OF TENNESSEE
DEPARTMENT OF TRANSPORTATION

ABUTMENT NOS. 1 & 2 REPAIR DETAILS
INTERSTATE 40 OVER
OAKDALE ROAD (NFA 1203)
BRIDGE NO. 73-10040-01.08
ROANE COUNTY
2014

DESIGNED BY	M. JONES	DATE	07/13
DRAWN BY	M. JONES	DATE	07/13
SUPERVISED BY	L. BILBREY	DATE	07/13
CHECKED BY	J. ECKEL	DATE	07/13

4/29/2014
F:\35\35034\35034ll\Bridge\35034ll_ABT001.dgn

BR-116-97