PROJECT NO.	YEAR	SHEET NO.
73100-4104-04	2007 (1)	

REVISIONS

NO.	DATE	BY	BRIEF DESCRIPTION
1		RC	REVISED DATE

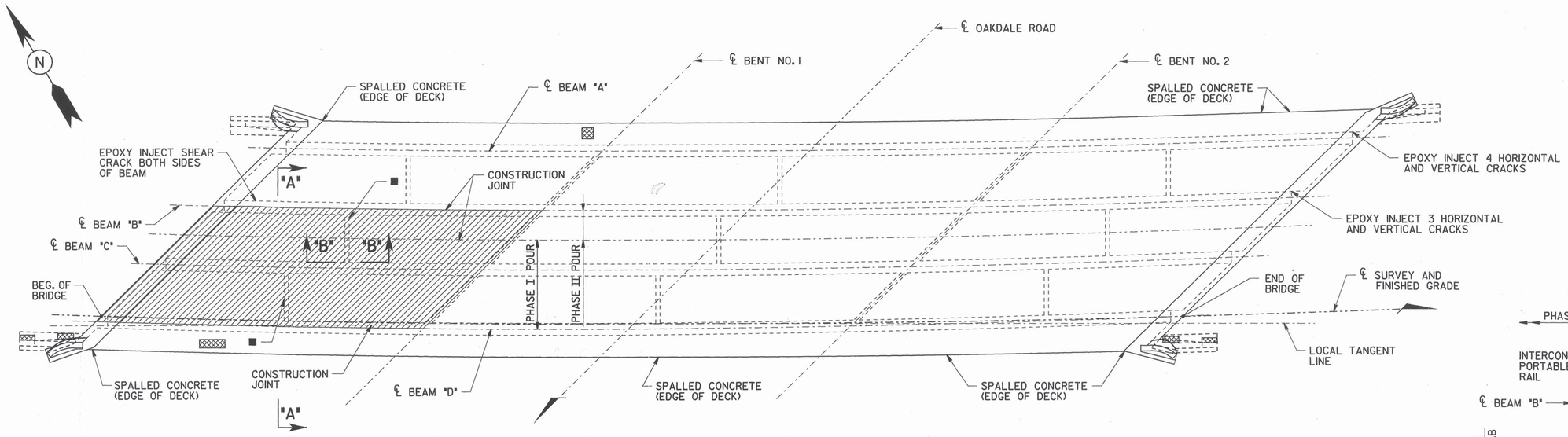

FRAMING PLAN - REPAIRS

DENOTES: APPROXIMATE LOCATION OF SPALL REPAIRS. SEE REPAIR DETAILS ON DWG. NO. BR-79-10.

DENOTES: LIMITS OF FULL DEPTH DECK REPAIR. THE CONTRACTOR SHALL ENSURE THAT NO CONCRETE IS REMOVED FROM THE CONCRETE BEAMS DURING FULL DEPTH DECK REPAIRS, AND THAT NO DAMAGE OCCURS TO ANY OF THE EXISTING REINFORCEMENT. SEE REPAIR DETAILS ON DWG. NO. BR-79-10.

■ DENOTES: EXISTING DIAPHRAGM TO BE REMOVED AND REPLACED, SEE DETAILS THIS SHEET.

NOTE: FOR CRACK REPAIR BY EPOXY INJECTION, SEE SPECIAL NOTES FOR EPOXY INJECTION ON DWG. NO. BR-79-10.

NOTE: LIMITS AND LOCATIONS OF REPAIRS TO BE DESIGNATED BY THE ENGINEER.

NOTE: THE ENGINEER SHALL HAVE THE OPTION OF DESIGNATING A SPALL AREA TO BE REPAIRED UNDER ITEM NO. 604-10.05 OR 604-10.54. PATCHING MATERIAL FOR ITEM NO. 604-10.05 SHALL BE HIGH EARLY STRENGTH CONCRETE. PATCHING MATERIAL FOR ITEM NO. 601-10.54 SHALL BE A POLYMER MODIFIED CEMENTITOUS STRUCTURAL MATERIAL. SEE T.D.O.T. QUALIFIED PRODUCTS LIST 13, SUBLIST F.

NOTE: THE ENGINEER SHALL DESIGNATE ALL SPALLED CONCRETE REPAIR AREAS IN THE FIELD. QUANTITIES GIVEN ARE APPROXIMATE. ITEM NO. 604-10.05 AND 604-10.54 SHALL BE BID WITH THE CONTINGENCY THAT THEY MAY BE INCREASED, DECREASED OR ELIMINATED AS DIRECTED BY THE ENGINEER.

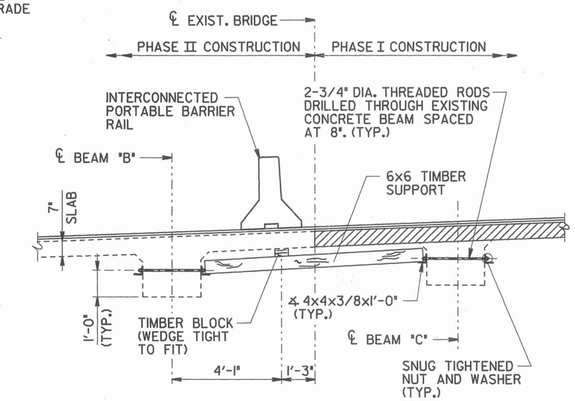

DETAIL SHOWING CONCEPTUAL BRACING SYSTEM

DENOTES: EXISTING CONCRETE DECK TO BE REMOVED.

NOTE: TEMPORARY BRACING SHALL BE INSTALLED BEFORE ANY DECK REPAIR IS BEGUN. THE CONTRACTOR SHALL ENSURE NO DAMAGE OCCURS TO THE EXISTING REINFORCEMENT.

NOTE: SPACING OF BRACING NOT TO EXCEED 6'-0".

NOTE: TEMPORARY BRACING SHALL BE REMOVED AFTER DECK REPAIRS HAVE BEEN COMPLETED. HOLES DRILLED THROUGH CONCRETE BEAMS SHALL BE FILLED WITH A NON-SHRINK GROUT.

NOTE: PHASE I CONSTRUCTION BRACING SHOWN, PHASE II CONSTRUCTION BRACING SIMILAR, OPPOSITE HAND.

NOTE: COST OF ALL LABOR AND MATERIALS REQUIRED FOR CANTILEVER BRACING SHALL BE INCLUDED IN THE PRICE BID FOR ITEM NO. 604-10.26, BRACING, EACH.

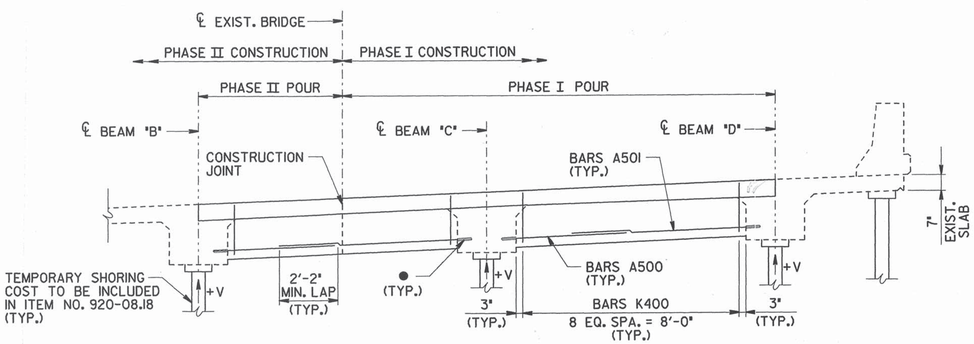

SECTION "A-A"

● DENOTES: BARS A500 AND A501 DRILLED AND GROUTED INTO EXISTING BEAM WITH 6" EMBEDMENT. SEE GENERAL NOTES ON DWG. NO. BR-79-2.

NOTE: THE CONTRACTOR SHALL BE RESPONSIBLE FOR THE STABILITY OF THE STRUCTURE DURING REPAIRS TO THE BEAMS AND DECK SLAB.

NOTE: THE INTENT OF THE SHORING SYSTEM SHOWN IS TO ENSURE THAT STRESSES ARE RE-INTRODUCED INTO THE FINAL CONCRETE BEAM CROSS-SECTIONS AFTER REPAIRS ARE MADE TO THE SLAB AND THE SHORING IS REMOVED. THE CONCRETE BEAMS SHALL BE JACKED ALONG THE LENGTH OF FULL DECK REPAIR ACCORDING TO THE SERVICE LOAD REACTIONS PROVIDED IN THE TABLE ON THIS SHEET PRIOR TO REMOVAL OF THE CONCRETE DECK. THE CONTRACTOR SHALL FURNISH STRUCTURAL DESIGNS AND PLANS OF THE PROPOSED TEMPORARY SUPPORTS, JACKING PROCEDURES AND FULL DEPTH DECK REPAIR SEQUENCE TO THE STRUCTURES DIVISION OF THE TENNESSEE DEPARTMENT OF TRANSPORTATION FOR REVIEW AND SHALL MEET WITH THE FULL SATISFACTION OF THE ENGINEER BEFORE ANY DECK REPAIR IS BEGUN.

NOTE: AFTER JACKING IS COMPLETED, THERE SHALL BE A MECHANISM TO INSURE THAT THE BRIDGE IS NOT SUPPORTED FROM THE HYDRAULIC COMPRESSORS.

NOTE: TEMPORARY SUPPORTS SHALL BE PLACED UNDER SOUND CONCRETE.

NOTE: SAW CUT AND REMOVE THE MINIMAL AMOUNT OF EXISTING SLOPE PAVEMENT REQUIRED FOR INSTALLATION OF TEMPORARY SHORING. EXTENT OF SLOPE PAVEMENT REMOVAL SUBJECT TO THE APPROVAL OF THE ENGINEER. AFTER THE TEMPORARY SHORING IS REMOVED, THE SLOPE PAVEMENT SHALL BE REPLACED WITH 4" THICK CEMENT CONCRETE SLAB REINFORCED WITH NO. 4 GAGE WIRE FABRIC AT 6" CENTERS AND 58 LB. PER 100 S.F. THE WIRE FABRIC REINFORCEMENT SHALL BE PLACED AT ONE-HALF THE DEPTH OF THE SLAB AND EXTEND TO WITHIN 3" OF ITS EDGE WITH A 12" LAP REQUIRED ON ALL NEW AND EXISTING SHEETS. ONE-HALF INCH PREMOULDED EXPANSION JOINTS WITHOUT LOAD TRANSFERS SHALL BE FORMED ABOUT ALL STRUCTURES AND FEATURES PROJECTING THROUGH, IN OR AGAINST THE SLAB. THE SLAB SHALL BE GROOVED TO MATCH GROOVE PATTERN OF EXISTING SLOPE PAVING. DEPTH OF GROOVE TO BE NOT LESS THAN 1". THE COST OF SAW CUTTING, REMOVAL OF EXISTING CONCRETE, CLASS "A" CONCRETE AND WIRE FABRIC REINFORCEMENT SHALL BE INCLUDED IN THE PRICE BID FOR ITEM NO. 920-08.18, TEMPORARY SHORING, L.S.

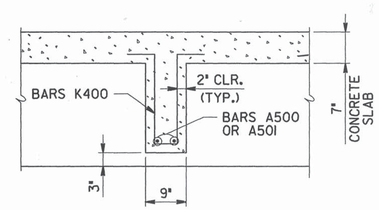

SECTION "B-B"

NOTE: THE COST OF REMOVING EXISTING DIAPHRAGM CONCRETE, AS DIRECTED BY THE ENGINEER, 18 HOUR CONCRETE, FORMING, LABOR AND ALL MISCELLANEOUS MATERIAL NECESSARY TO COMPLETE THE DIAPHRAGM REPLACEMENT AS SHOWN SHALL BE INCLUDED IN THE PRICE BID FOR ITEM NO. 604-10.42, CONCRETE REPAIRS, C.F.

ESTIMATED SUPERSTRUCTURE REPAIRS

ITEM NO. 604-10.05 OR 604-10.54 S.F.	ITEM NO. 604-10.62 L.F.
26	15

JACKING REACTIONS (V) (KIPS PER FOOT)

BEAM	CONCRETE	ASPHALT
"B"	1.80	0.85
"C"	1.80	0.85
"D"	1.75	0.65

NOTE: VERTICAL REACTIONS ARE STATED IN KIPS PER LINEAR FOOT (1 KIP = 1,000 LBS.).

BILL OF STEEL

BAR	SIZE	NO. REQ'D.	LENGTH
A500	5	4	7'-0"
A501	5	4	4'-9"
K400	4	18	3'-2"

NOTE: THE COST OF REINFORCING STEEL FOR DIAPHRAGM REPLACEMENT TO BE INCLUDED IN ITEM NO. 604-03.02, STEEL BAR REINFORCEMENT (BRIDGES), LB.

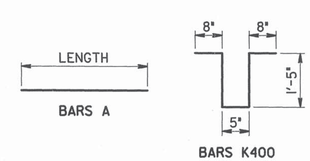

STATE OF TENNESSEE
DEPARTMENT OF TRANSPORTATION

SUPERSTRUCTURE DETAILS
INTERSTATE 40
OVER
OAKDALE ROAD (NFA 1203)
BRIDGE NO. 73-I40-1.08
ROANE COUNTY
2007 (1)

BR-79-4

DESIGNED BY BILBREY, JEKABSONS DATE 1/06
DRAWN BY STARNES, WILSON DATE 1/06
SUPERVISED BY BILBREY, BARTHOLOMEW DATE 1/06
CHECKED BY JEKABSONS DATE 1/06

SCANNED