SPECIAL NOTES FOR EPOXY INJECTION

UNLESS OTHERWISE NOTED, THE INTENT OF THIS SPECIFICATION IS FOR DESIGNATED CRACKS TO BE INJECTED THEIR FULL LENGTH AND DEPTH.

DESIGNATED CRACKS SHALL BE INJECTED WITH AN APPROVED EPOXY RESIN ADHESIVE FILLING ALL VOIDS FOR THE CRACK DEPTH OR THICKNESS OF THE MEMBER. THE EPOXY RESIN ADHESIVE SHALL BE ON THE CURRENT QUALIFIED PRODUCTS LIST MAINTAINED BY THE DIVISION OF MATERIALS AND TEST. ALL CRACKS SHALL BE INJECTED USING AN ADHESIVE SUITABLE FOR THE FIELD CONDITIONS (CRACK WIDTH, TEMPERATURE, HUMIDITY, ETC.) RECOMMENDED BY THE ADHESIVE MANUFACTURER AS SHOWN ON MATERIAL DATA SHEETS. FOLLOWING INJECTION, ALL INJECTION PORTS AND CAPPING MATERIAL SHALL BE REMOVED FROM EXPOSED SURFACES LEAVING THE SURFACE SMOOTH AND FLUSH WITH THE SURROUNDING CONCRETE SURFACES.

THE CONTRACTOR SHALL HAVE SUFFICIENT EXPERIENCE AND TRAINING TO PERFORM THE EPOXY INJECTION IN ACCORDANCE WITH THESE PLANS. PRIOR TO PERFORMING ANY WORK, THE CONTRACTOR SHALL SUBMIT TO THE ENGINEER A WRITTEN PROCEDURE FOR PERFORMING THE EPOXY INJECTION. THE PROCEDURE SHALL DESCRIBE IN DETAIL HOW THE WORK WILL BE PERFORMED. THE PROCEDURE SHALL INCLUDE, BUT NOT BE LIMITED TO THE FOLLOWING INFORMATION.

1) DESCRIPTION OF EQUIPMENT.
   A. THE INJECTION EQUIPMENT SHALL BE OF THE TYPE THAT MIXES ADHESIVE COMPONENTS AT THE INJECTION HEAD.
   B. THE INJECTION EQUIPMENT SHALL BE CAPABLE OF DISCHARGING MIXED ADHESIVE AT ANY PRESSURE UP TO 300 PSI. THE INJECTION EQUIPMENT SHALL BE EQUIPPED WITH GAUGES WHICH CAN MEASURE THE INJECTION PRESSURE AND VOLUME.

2) EQUIPMENT CALIBRATION PROCEDURES AND SCHEDULE.

3) MATERIALS TO BE USED (INCLUDING MANUFACTURER DATA SHEETS).
   A. CAPPING MATERIAL
   B. EPOXY ADHESIVE (TYPE TO BE APPROPRIATE FOR CRACK SIZES TO BE INJECTED).

4) PORT SPACING
   A. PORT SPACING SHALL NOT BE LESS THAN THE THICKNESS OF THE CONCRETE IN THAT LOCATION.

5) INJECTION SEQUENCE
   A. INJECTION SHALL PROCEED FROM LOWER END OF CRACK ALONG ADJACENT PARTS.
   B. SKIPPING OF PORTS DURING INJECTION SHALL NOT BE ALLOWED.

THE CONTRACTOR SHALL HAVE THE MANUFACTURER'S INSTRUCTIONS FOR PROPORTIONING AND MIXING AVAILABLE AT THE JOB SITE AT ALL TIMES AND SHALL ENSURE THAT THE EQUIPMENT IS SUPPLYING THE MIXED ADHESIVE IN THE CORRECT PROPORTIONS.

TO ENSURE PROPER MIXING AND PROPORTIONING, SAMPLES SHALL BE TAKEN FROM THE INJECTOR HEAD AT THE START OF EACH WORKDAY AND EACH TIME THE ADHESIVE RESERVOIRS ARE REFILLED. THE SAMPLES SHALL BE IN A TEST CUP. THE SAMPLE SHALL BE MONITORED TO ENSURE THAT THE CURE TIME IS IN COMPLIANCE WITH THE MANUFACTURER'S DATA SHEETS. IF THE SAMPLES DO NOT CURE IN THE SPECIFIED TIME THEN THE EQUIPMENT USED TO PRODUCE THE SAMPLE SHALL NOT BE USED UNTIL THE PROBLEM IS CORRECTED.

CORE SAMPLES SHALL BE TAKEN AS VERIFICATION OF THE QUALITY OF WORK. THE CONTRACTOR SHALL TAKE ONE (1) ONE (1) INCH DIAMETER (FULL DEPTH OF CONCRETE AT LOCATION CORED) CORE SAMPLE STARTING WITH THE FIRST REPAIR LOCATION THEN EVERY THIRD REPAIR LOCATION AFTERWARDS. WORK SHALL NOT PROCEED UNTIL THE CORE SAMPLE IS TAKEN AND ACCEPTED. ALL CORE SAMPLES AND HOLES SHALL BE INDEXED FOR FUTURE REFERENCE. THE ENGINEER SHALL DESIGNATE ALL LOCATIONS TO BE CORED. IF ANY CORES SHOW UNACCEPTABLE RESULTS, ALL WORK SHALL BE STOPPED UNTIL THE CONTRACTOR SUBMITS A PROPOSAL FOR CORRECTING UNACCEPTABLE WORK.

THE INITIAL CORE WILL ALSO SERVE TO QUALIFY THE FOREMAN FOR THIS WORK. IF AT ANY TIME A NEW FOREMAN IS USED, HE SHALL BE QUALIFIED WITH A CORE SAMPLE.

THE CONTRACTOR, AT HIS EXPENSE, SHALL REPAIR ALL CORE HOLES WITH AN APPROVED CEMENTITIOUS PATCHING MATERIAL.

CORE SAMPLES SHALL BE VISUALLY INSPECTED TO CONFIRM THAT CRACKS ARE COMPLETELY FILLED WITH ADHESIVE. ANY CORE HAVING LESS THAN 95% OF THE CRACK FILLED WITH ADHESIVE SHALL BE CONSIDERED UNACCEPTABLE AND BE REJECTED.

CORE SAMPLES SHALL BE TESTED FOR BOND STRENGTH. SAMPLES MAY BE FRACTURED BY HAMMER BLOW TO CRACK AREA OR THROWN AT A HARD SURFACE. IF ADHESIVE FAILURE OCCURS BEFORE CONCRETE FAILURE, THE CORE SHALL BE CONSIDERED UNACCEPTABLE AND REJECTED.

PAYMENT FOR EPOXY INJECTION CRACK REPAIR SHALL BE MADE UNDER ITEM NUMBERS 604-10.62, EPOXY INJECTION REPAIR (COMPLETE AND IN PLACE), L.F. AND 604-10.58, EPOXY INJECTION (INJECTION), GAL.

PRICE BID FOR ITEM NUMBER 604-10.62, EPOXY INJECTION REPAIR (COMPLETE AND IN PLACE), L.F., SHALL INCLUDE COST OF ALL LABOR AND MATERIALS (EXCEPT ADHESIVE) FOR GRINDING FOR SURFACE PREPARATION, CRACK PREPARATION, CAPPING, INJECTION OF ADHESIVE, ALL SAMPLING AND TESTING, REMOVAL OF CAPPING MATERIAL AND PORTS, AND OTHER INCIDENTALS. CRACKS SHALL BE MEASURED FOR PAYMENT ALONG THE LENGTH OF THE VISIBLE SURFACE CRACK.

PRICE BID FOR ITEM NUMBER 604-10.58, EPOXY INJECTION (INJECTION), GAL., SHALL INCLUDE COST FOR ADHESIVE MATERIAL INJECTED ONLY.

NO PAYMENT SHALL BE MADE FOR REWORK DEEMED NECESSARY BY FAILURE OF ADHESIVE SAMPLES OR CORE SAMPLES.

ALL WORK INCLUDING SAMPLING AND TESTING SHALL BE IN THE PRESENCE OF THE ENGINEER OR HIS REPRESENTATIVE OR CONTRACT INSPECTORS. ANY WORK DONE WITHOUT INSPECTORS PRESENT SHALL NOT BE PAID FOR. THE CONTRACTOR SHALL PROVIDE THE ENGINEER WITH WEEKLY SCHEDULES OF WORK TO BE PERFORMED. SCHEDULES SHALL BE SUBMITTED AT LEAST THREE (3) DAYS IN ADVANCE OF WORK TO BE DONE. THE ENGINEER SHALL BE NOTIFIED OF ANY CHANGE IN THE SCHEDULE A MINIMUM OF TWENTY-FOUR (24) HOURS IN ADVANCE OF CHANGE.

DESIGNED BY	M. JONES	DATE	07/13
DRAWN BY	M. JONES	DATE	07/13
SUPERVISED BY	L. BILBREY	DATE	07/13
CHECKED BY	J. ECKEL	DATE	07/13

4/29/2014
F:\35\35034\35034II\Bridge\35034II_MD001.dgn

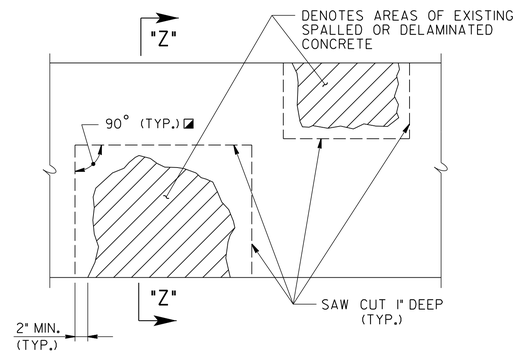

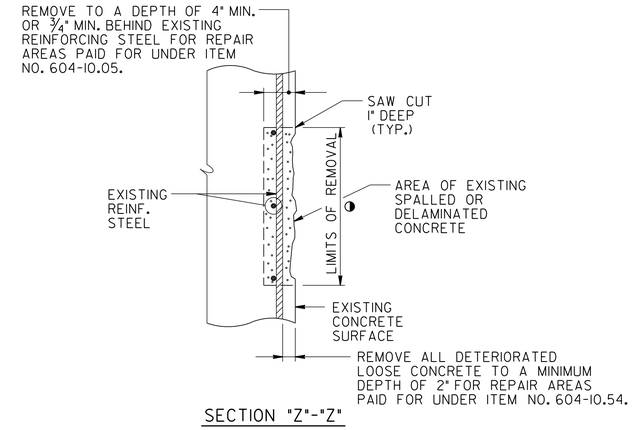

SECTION "Z"-"Z"

PROJECT NO.	YEAR	SHEET NO.
73100-4117-04	2014	

REVISIONS

NO.	DATE	BY	BRIEF DESCRIPTION

DETAIL SHOWING AREAS OF EXISTING SPALLED OR DELAMINATED CONCRETE SURFACES TO BE REMOVED AND REPAIRED

◒ DENOTES: LIMITS AND LOCATION OF REPAIRS TO BE DESIGNATED BY THE ENGINEER.

◪ DENOTES: SAW CUT EXISTING CONCRETE SURFACES SO AS TO OBTAIN SQUARED CORNERS.

NOTE: EXTREME CARE SHALL BE TAKEN WHEN REMOVING THE EXISTING SPALLED OR DELAMINATED CONCRETE SO AS NOT TO DAMAGE THE EXISTING REINFORCING STEEL. ALL EXPOSED EXISTING REINFORCING STEEL SHALL RECEIVE A COMPLETE CLEANING TO REMOVE ALL RUST. ALL EXISTING REINFORCEMENT SHALL REMAIN IN PLACE AND INCORPORATED INTO THE NEW CONSTRUCTION. ALL WORK MUST MEET WITH THE FULL APPROVAL OF THE ENGINEER.

THE ENGINEER SHALL HAVE THE OPTION OF DESIGNATING A SPALLED OR DELAMINATED AREA TO BE REPAIRED UNDER ITEM NO. 604-10.05 OR 604-10.54. PATCHING MATERIAL FOR ITEM NO. 604-10.05 SHALL BE HIGH EARLY STRENGTH CONCRETE. PATCHING MATERIAL FOR ITEM NO. 604-10.54 SHALL BE A POLYMER MODIFIED CEMENTITIOUS STRUCTURAL PATCHING MATERIAL. SEE T.D.O.T. QUALIFIED PRODUCTS LIST 13, SECTION B.6.

NOTE: PNEUMATICALLY PLACED CONCRETE IS NOT ALLOWED.

COST OF SAW CUTTING, REMOVING SPALLED OR DELAMINATED CONCRETE, CLEANING, PATCHING MATERIAL, LABOR AND ANY MISCELLANEOUS MATERIALS NECESSARY TO COMPLETE THE REPAIRS AS SHOWN TO BE INCLUDED IN ITEM NO. 604-10.54, CONCRETE REPAIRS, S.F. OR ITEM NO. 604-10.05, CONCRETE, S.F.

THE ENGINEER SHALL DESIGNATE ALL SPALLED OR DELAMINATED CONCRETE REPAIR AREAS IN THE FIELD. QUANTITIES GIVEN ARE APPROXIMATE. ITEM NO. 604-10.05 AND 604-10.54 SHALL BE BID WITH THE CONTINGENCY THAT THEY MAY BE INCREASED, DECREASED OR ELIMINATED AS DIRECTED BY THE ENGINEER.

POWER HAND DRIVEN TOOLS USED FOR REMOVAL OF UNSOUND CONCRETE ARE SUBJECT TO THE FOLLOWING RESTRICTIONS:
1. PNEUMATIC HAMMERS HEAVIER THAN THE 35 LB. CLASS SHALL NOT BE USED.
2. CHIPPING HAMMERS OF THE 15 LB. CLASS SHALL BE USED TO REMOVE CONCRETE FROM BEHIND REINFORCING STEEL.

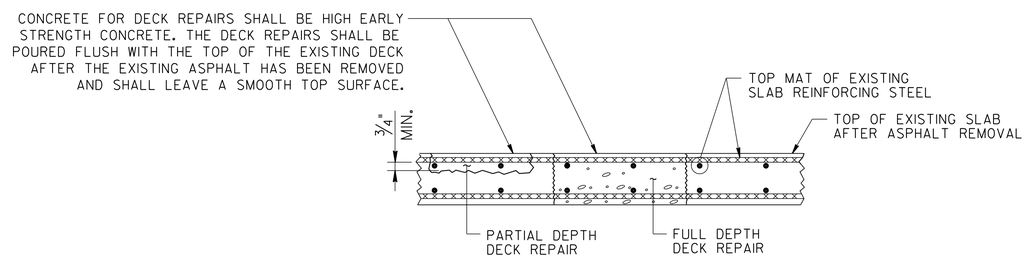

DETAIL SHOWING FULL AND PARTIAL DEPTH DECK REPAIR

NOTE: CONCRETE FOR DECK REPAIRS SHALL BE HIGH EARLY STRENGTH CONCRETE F'c=3,000 PSI @ 18 HOUR STRENGTH. TRAFFIC SHALL NOT BE PERMITTED ON ANY REPAIR AREA UNTIL TEST SPECIMENS ATTAIN A COMPRESSIVE STRENGTH OF 3,000 PSI MINIMUM AND THE CONCRETE HAS BEEN IN PLACE A MINIMUM OF EIGHTEEN (18) HOURS.

NOTE: REMOVE CONCRETE IN ALL DELAMINATED AREAS TO A DEPTH OF 3/4" BELOW THE TOP BAR OF THE TOP MAT OF REINFORCING STEEL. ALL REINFORCING STEEL IN AREAS OF DECK REPAIR SHALL BE COMPLETELY CLEANED. AREAS OF CONCRETE REMOVAL SHALL BE DESIGNATED BY PERSONNEL FROM THE BRIDGE REPAIR OFFICE. INSPECTIONS TO DETERMINE AREAS OF DECK REPAIR SHALL BE SCHEDULED WITH THE BRIDGE REPAIR OFFICE AT LEAST THREE (3) DAYS IN ADVANCE. DECK REPAIR WILL BE PAID FOR UNDER ITEM NO. 604-10.50, BRIDGE DECK REPAIR (PARTIAL DEPTH OF SLAB), AND ITEM NO 604-10.30 BRIDGE DECK REPAIR (FULL DEPTH OF SLAB). DURING PARTIAL DEPTH REPAIRS, SHOULD DETERIORATED CONCRETE BE ENCOUNTERED WHICH APPEARS TO RUN FULL DEPTH IN THE SLAB, THE ENGINEER MAY DESIGNATE THESE AREAS TO BE REPAIRED UNDER ITEM NO. 604-10.30. POWER DRIVEN HAND TOOLS USED FOR THE REMOVAL OF UNSOUND CONCRETE IN MAKING PARTIAL AND FULL DEPTH REPAIRS ARE SUBJECT TO THE FOLLOWING RESTRICTIONS:
PNEUMATIC HAMMERS FOR 1) PARTIAL DEPTH REPAIR AREAS, FULL DEPTH REPAIR AREAS, AND ALL DECK REPAIR AREAS OVER BEAMS WILL BE RESTRICTED TO 60 POUND CLASS.
2) CHIPPING HAMMERS OF THE 15 POUND CLASS SHALL BE USED TO REMOVE CONCRETE FROM BENEATH ANY REINFORCING STEEL.

NOTE: ITEM NOS. 604-10.30 AND 604-10.50 SHALL BE BID WITH THE CONTINGENCY THAT THIS ITEM MAY BE INCREASED, DECREASED OR ELIMINATED AS DIRECTED BY THE ENGINEER.

STATE OF TENNESSEE
DEPARTMENT OF TRANSPORTATION

MISCELLANEOUS REPAIR DETAILS
INTERSTATE 40 OVER
OAKDALE ROAD (NFA 1203)
BRIDGE NO. 73-10040-01.08
ROANE COUNTY
2014

BR-116-99