PROJECT NO.	YEAR	SHEET NO.
73100-4117-04	2014	

REVISIONS

NO.	DATE	BY	BRIEF DESCRIPTION

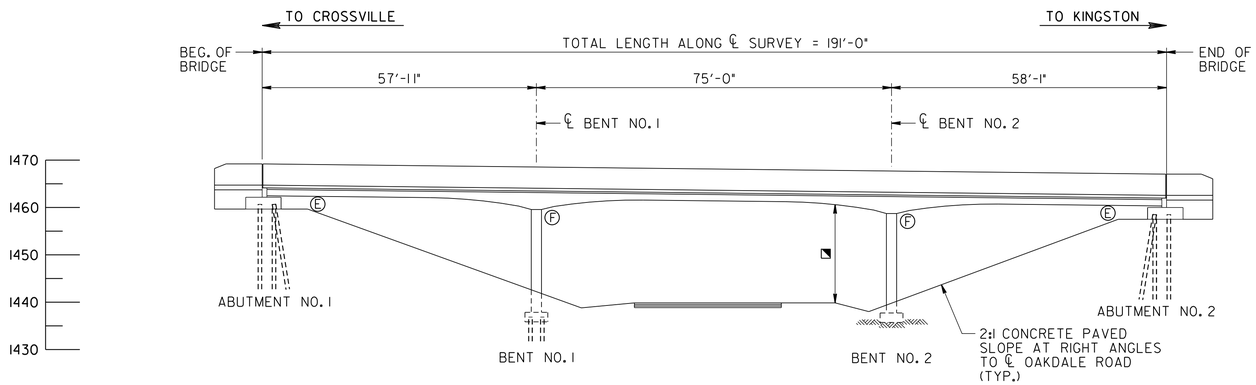

ELEVATION

Ⓔ DENOTES: EXPANSION
Ⓕ DENOTES: FIXED
NOTE: EXISTING AND PROPOSED SUPPORT CONDITIONS TO REMAIN THE SAME.
◪ DENOTES: 17'-0" MINIMUM VERTICAL CLEARANCE

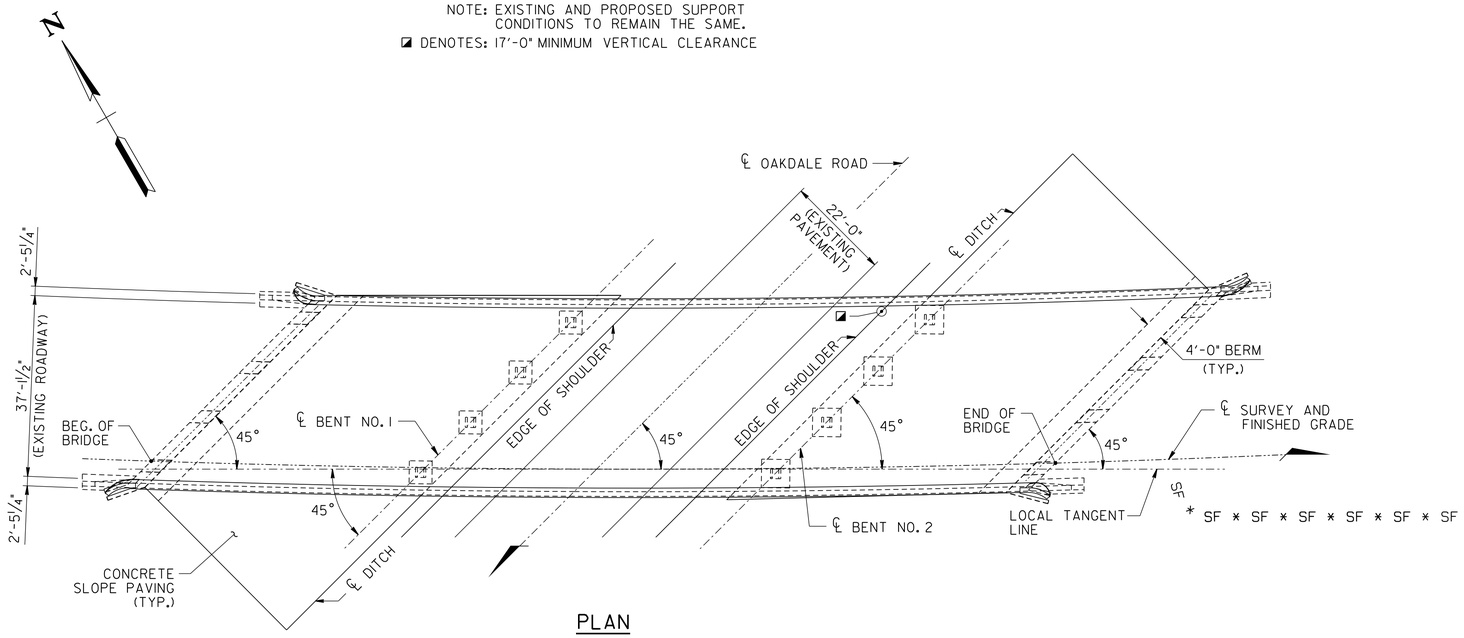

PLAN

GENERAL SCOPE OF WORK

1. PROVIDE REQUIRED TRAFFIC CONTROL TO MAINTAIN AT LEAST ONE 16'-0" LANE (MIN. WIDTH) OF TRAFFIC ON THE EXISTING BRIDGE AND ONE 9'-0" LANE (MIN. WIDTH) OF TRAFFIC ON OAKDALE ROAD (NFA 1203). PROVIDE A WIDE LOAD DETOUR AS SHOWN IN THE PLANS.
2. REMOVE ASPHALT FROM EXISTING BRIDGE AND APPROACH TRANSITIONS AND REPLACE WITH DECK SEAL AND 3 1/4" ASPHALT OVERLAY ON THE BRIDGE AND ASPHALT IN THE TRANSITIONS.
3. PROVIDE SPALL REPAIRS ON ALL BEAMS, INTERMEDIATE DIAPHRAGMS AND SUBSTRUCTURES.
4. ONCE DOWN TO SINGLE LANE ON INTERSTATE 40, WORK AROUND THE CLOCK.
5. PROVIDE PARTIAL AND FULL DEPTH DECK REPAIRS.
6. USE EIGHTEEN (18) HOUR HIGH EARLY STRENGTH CONCRETE FOR DECK AND DIAPHRAGM REPAIRS.
7. PROVIDE TEXTURE COATING FOR PARAPETS (TOP AND INSIDE FACE).
8. INSTALL NEW DELINEATORS ON TOP OF BRIDGE RAILS. COST TO BE INCLUDED IN OTHER ITEMS.
9. PROVIDE TEXTURE COATING ON SIDES AND BOTTOM OF ALL BEAMS AND TOUCH UP VISIBLE FACES OF ALL INTERMEDIATE DIAPHRAGMS AND BENT COLUMNS AS SHOWN.
10. REPAIR CRACK IN ENDPOST AT END OF BRIDGE, RIGHT SIDE, LOOKING EAST.
11. PROVIDE EPOXY INJECTION FOR CRACKS IN PARAPETS, BEAMS, DIAPHRAGMS, AND SUBSTRUCTURES AS SHOWN IN PLANS.
12. REMOVE DAMAGED GUARDRAIL AT ABUTMENT NO. 2, RIGHT SIDE, AND INSTALL NEW TYPE 38 END TERMINAL.

LIST OF DRAWINGS

DWG. NO.	LAST REV. DATE	DRAWING
BR-116-93		LAYOUT OF BRIDGE TO BE REPAIRED
BR-116-94		GENERAL NOTES AND ESTIMATED BRIDGE QUANTITIES
BR-116-95		SUPERSTRUCTURE
BR-116-96		SUPERSTRUCTURE REPAIR DETAILS
BR-116-97		ABUTMENT NOS. 1 AND 2 REPAIR DETAILS
BR-116-98		BENT REPAIR DETAILS
BR-116-99		MISCELLANEOUS REPAIR DETAILS

* LIST OF REFERENCE DRAWINGS

DWG. NO.	DRAWING
K-58-7 THRU K-58-11	EXISTING BRIDGE PLANS
BR-79-1 THRU BR-79-7	BRIDGE REPAIR PLANS - 2006

* DENOTES: THESE DRAWINGS ARE TO BE PRINTED WITH PLANS.

2014 ADT = 30,100
POSTED SPEED LIMIT = 70 M.P.H.

STATE OF TENNESSEE
DEPARTMENT OF TRANSPORTATION

LAYOUT OF BRIDGE TO BE REPAIRED
INTERSTATE 40 OVER
OAKDALE ROAD (NFA 1203)
BRIDGE NO. 73-10040-01.08
ROANE COUNTY
2014

DESIGNED BY	M. JONES	DATE	07/13
DRAWN BY	M. JONES	DATE	07/13
SUPERVISED BY	L. BILBREY	DATE	07/13
CHECKED BY	J. ECKEL	DATE	07/13

4/29/2014
F:\35\35034\35034\IlBridge\35034ILLAY001.dgn

BR-116-93

TOTAL DISTURBED AREA = 350 S.F. (0.01 ACRES)