GN1058F.DGN

CONSTRUCTION NO. 18011-3225-94

TYPE	YEAR	PROJECT NO.	SHEET NO.
	2012	BR-STP-298(10)	2

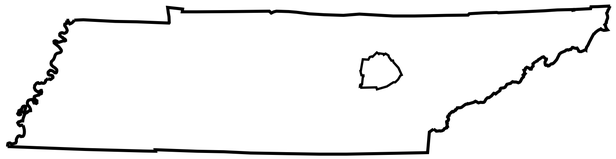

CUMBERLAND COUNTY

X181

STATE ROUTE 298
OVER
INTERSTATE 40

PRECAST PRESTRESSED
BT-72
BULB-TEE BEAMS
WITH COMPOSITE
CONCRETE DECK SLAB

2 SPAN BRIDGE
TOTAL LENGTH
= 238'-0"
SPAN NO. 1 = 119'-0"
SPAN NO. 2 = 119'-0"

84'-0" ROADWAY WITH
STD-1-1SS PARAPET

82°06'02" SKEW
LAYOUT DRAWING NO.
U-45-104

ESTIMATED BRIDGE QUANTITIES

ITEM NO.	DESCRIPTION	QUANTITY	UNIT
202-04.01	REMOVAL OF STRUCTURES (BR. NO. 18-SR298-02.23)	1	L.S.
204-02.01	DRY EXCAVATION (BRIDGES)	186	C.Y.
204-04.01	ROCK EXCAVATION (BRIDGES)	6	C.Y.
204-05	ROCK DRILLING (BRIDGES)	24	L.F.
303-01.02	GRANULAR BACKFILL (BRIDGES)	54	TON
604-02.03	EPOXY COATED REINFORCING STEEL	152,796	LB.
604-03.01	CLASS "A" CONCRETE (BRIDGES)	220	C.Y.
604-03.02	STEEL BAR REINFORCEMENT (BRIDGES)	58,338	LB.
604-03.04	PAVEMENT @ BRIDGE ENDS	444	S.Y.
604-03.09	CLASS D CONCRETE (BRIDGE DECK)	587	C.Y.
604-04.01	APPLIED TEXTURE FINISH (NEW STRUCTURES)	5,062	S.Y.
604-05.31	BRIDGE DECK GROOVING (MECHANICAL)	2,569	S.Y.
606-03.03	STEEL PILES (12 INCH)	646	L.F.
606-03.06	PILE TIPS (STEEL PILES, 12 INCH)	34	EACH
615-01.11	PRESTRESSED CONCRETE BULB-TEE BEAM (6" WEB) (BT-63)	2,330	L.F.
617-02	BRIDGE DECK CRACK SEALING	238	L.F.
617-05	SEALANT (HMWM)	4	GAL.
620-05.01	CONCRETE PARAPET SINGLE SLOPE (STD-1-1SS)	545	L.F.
710-09.01	6" PERFORATED PIPE WITH VERTICAL DRAIN SYSTEM	220	L.F.
710-09.02	6" PIPE UNDERDRAIN	34	L.F.

FOOTNOTE: SEE DWG. NO. U-45-105

LIST OF DRAWINGS

	DWG. NO.	LAST REV. DATE
LAYOUT THRU BILL OF STEEL	U-45-104 THRU U-45-126	- - - -

LIST OF STANDARD DRAWINGS

	DWG. NO.	LAST REV. DATE
SLOPE PROTECTION	RD01-SA-1	10-15-02
BRIDGE RAILING SINGLE SLOPE CONCRETE PARAPET	STD-1-1SS	6-01-11
REINFORCED CONCRETE PAVEMENT AT BRIDGE ENDS	STD-1-5	6-01-11
BRIDGE END DRAIN DETAILS 2'x8'-7" & 4'x8'-7" WITH PAVEMENT AT BRIDGE ENDS	STD-1-6	4-28-97
BRIDGE END DRAIN DETAILS 2'x8'-7" & 4'x8'-7" WITH PAVEMENT AT BRIDGE ENDS	STD-1-7	8-24-11
BRIDGE END DRAIN DETAILS 4'x8'-7" WITH PAVEMENT AT BRIDGE ENDS	STD-1-9	5-1-95
STD. PRECAST PRESTRESSED BRIDGE DECK PANELS CONSTRUCTION DETAILS	STD-4-4	6-10-96
STANDARD PILE DETAILS	STD-5-1	10-25-93
STANDARD PILE DETAILS	STD-5-2	04-08-05
STANDARD SEISMIC DETAILS	STD-6-1	11-01-10
REINF. BAR SUPPORT DETAILS FOR CONC. SLABS	STD-9-1	10-07-08
MISCELLANEOUS ABUTMENT & DRAINAGE DETAILS	STD-10-1	4-08-05
STD. DETAILS AND INTERMEDIATE DIAPHRAGM DETAILS FOR BULB-TEE BEAMS	STD-14-1	10-15-08

STATE OF TENNESSEE
DEPARTMENT OF TRANSPORTATION
BUREAU OF HIGHWAYS

ESTIMATED BRIDGE QUANTITIES

dgnspecs
dgnlib

LAY1058F.DGN

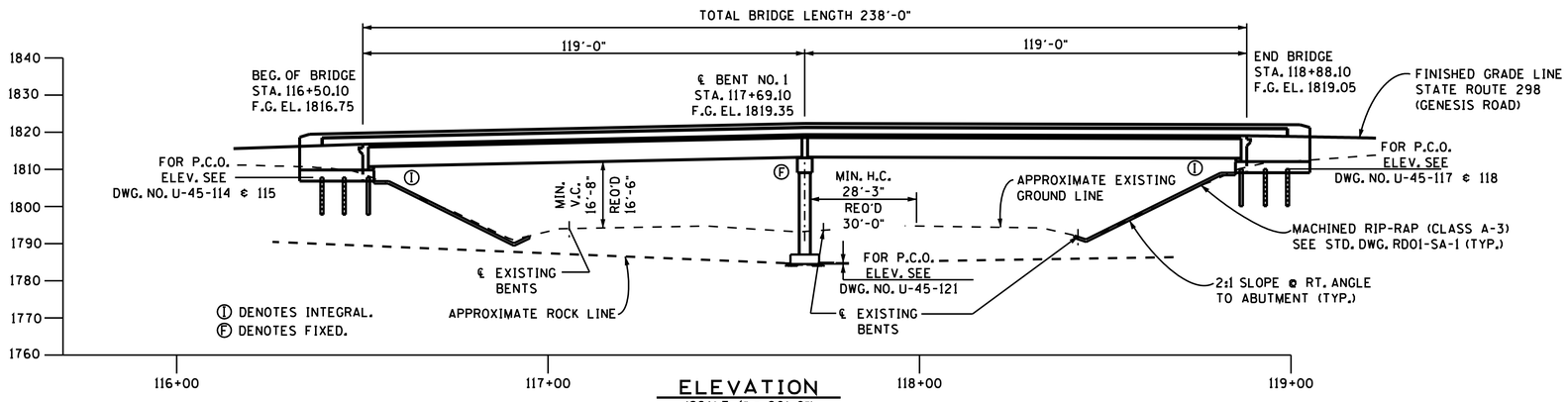

ELEVATION
(SCALE 1" = 20'-0")

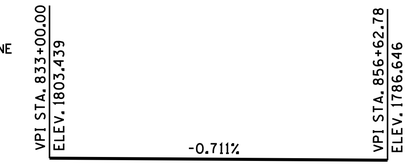

GRADE SKETCH
INTERSTATE 40

CONST. NO.	18011-3225-94	
PROJECT NO.	YEAR	SHEET NO.
BR-STP-298(10)	2013	

REVISIONS

NO.	DATE	BY	BRIEF DESCRIPTION

LIST OF DRAWINGS

	DWG. NO.	LAST REV. DATE
LAYOUT OF BRIDGE	U-45-104	-----
GENERAL NOTES & ESTIMATED QUANTITIES	U-45-105	-----
FOUNDATION DATA	U-45-106	-----
FOUNDATION DATA	U-45-107	----
SUPERSTRUCTURE	U-45-108	-----
SUPERSTRUCTURE DETAILS	U-45-109	-----
SUPERSTRUCTURE DETAILS	U-45-110	-----
SUPERSTRUCTURE DETAILS	U-45-111	-----
PHASE CONSTRUCTION DETAILS	U-45-112	-----
PRESTRESSED BEAM DETAILS	U-45-113	-----
ABUTMENT NO. 1	U-45-114	-----
ABUTMENT NO. 1 DETAILS	U-45-115	-----
ABUTMENT NO. 1 DETAILS	U-45-116	-----
ABUTMENT NO. 2	U-45-117	-----
ABUTMENT NO. 2 DETAILS	U-45-118	-----
ABUTMENT NO. 2 DETAILS	U-45-119	-----
ABUTMENT NO. 1 & 2 DETAILS	U-45-120	-----
BENT NO. 1	U-45-121	-----
BENT NO. 1 DETAILS	U-45-122	-----
BENT NO. 1 DETAILS	U-45-123	-----
FINAL FOUNDATION DATA	U-45-124	-----
BILL OF STEEL	U-45-125	-----
BILL OF STEEL	U-45-126	-----

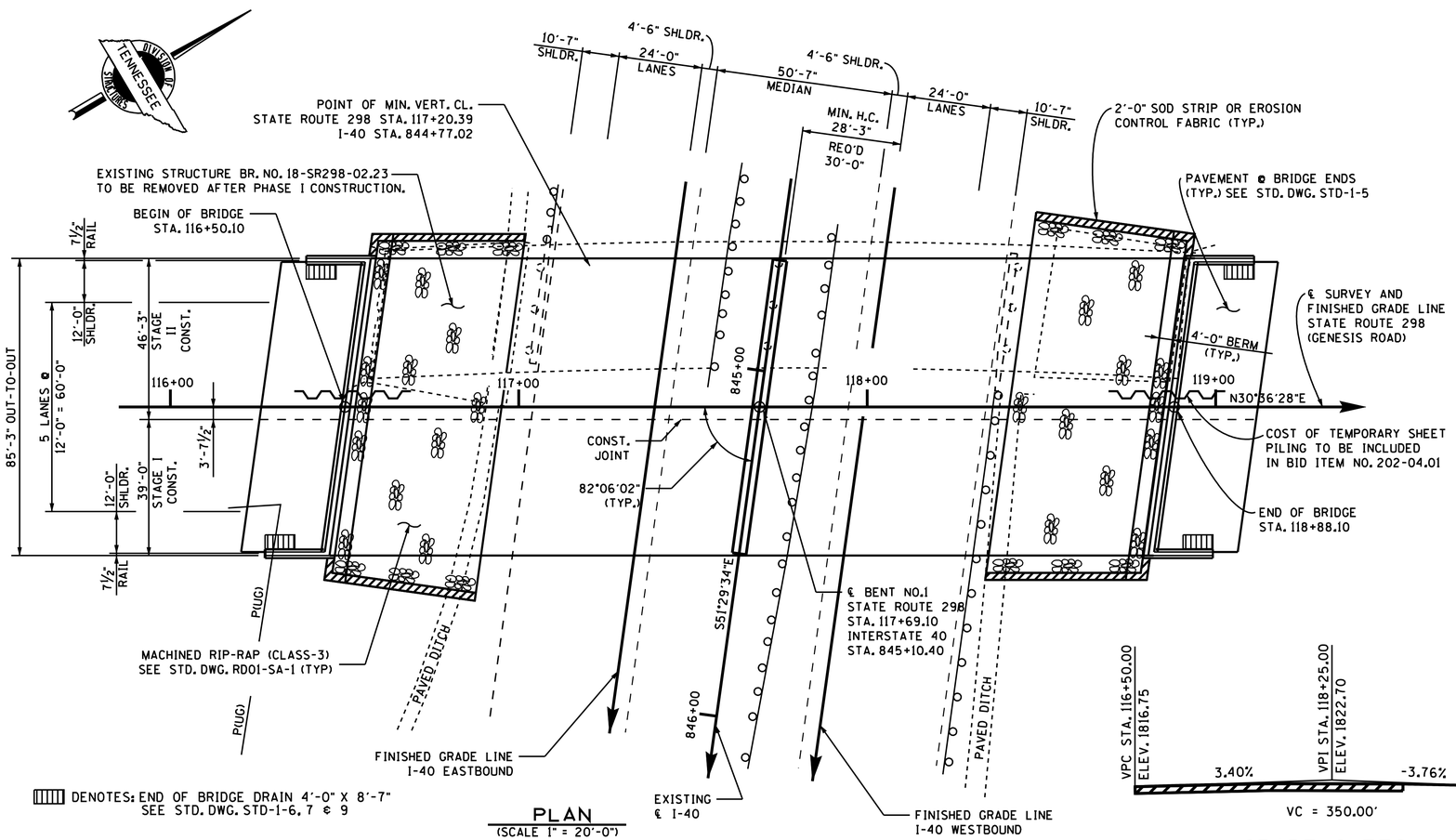

PLAN
(SCALE 1" = 20'-0")

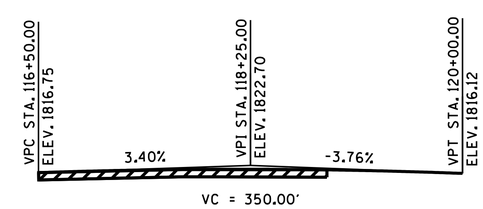

GRADE SKETCH
RELOCATED GENESIS ROAD

LIST OF STANDARD DRAWINGS

	DWG. NO.	LAST REV. DATE
SLOPE PROTECTION	RD01-SA-1	10-15-02
BRIDGE RAILING SINGLE SLOPE CONCRETE PARAPET	STD-1-ISS	6-01-11
REINFORCED CONCRETE PAVEMENT AT BRIDGE ENDS	STD-1-5	6-01-11
BRIDGE END DRAIN DETAILS 2'x8'-7" & 4'x8'-7" WITH PAVEMENT AT BRIDGE ENDS	STD-1-6	4-28-97
BRIDGE END DRAIN DETAILS 2'x8'-7" & 4'x8'-7" WITH PAVEMENT AT BRIDGE ENDS	STD-1-7	8-24-11
BRIDGE END DRAIN DETAILS 4'x8'-7" WITH PAVEMENT AT BRIDGE ENDS	STD-1-9	5-1-95
STD. PRECAST PRESTRESSED BRIDGE DECK PANELS CONSTRUCTION DETAILS	STD-4-4	6-10-96
STANDARD PILE DETAILS	STD-5-1	10-25-93
STANDARD PILE DETAILS	STD-5-2	04-08-05
STANDARD SEISMIC DETAILS	STD-6-1	11-01-10
REINF. BAR SUPPORT DETAILS FOR CONC. SLABS	STD-9-1	10-07-08
MISCELLANEOUS ABUTMENT & DRAINAGE DETAILS	STD-10-1	4-08-05
STD. DETAILS AND INTERMEDIATE DIAPHRAGM DETAILS FOR BULB-TEE BEAMS	STD-14-1	10-15-08

2032ADT = 22,370
84'-0" ROADWAY WITH STD-1-ISS PARAPET
DESIGN SPEED = 40 mph

STATE OF TENNESSEE
DEPARTMENT OF TRANSPORTATION

LAYOUT OF BRIDGE
STATE ROUTE 298
OVER
INTERSTATE 40
STATION 117+69.10
BRIDGE I.D. NO. 18100400023
CUMBERLAND COUNTY
2013

TIMOTHY E. HUFF
REGISTERED ENGINEER
AGRICULTURE
CUMBERLAND
STATE OF TENNESSEE

CORRECT Wayne G. Sieger
ENGINEER OF STRUCTURES

DESIGNED BY	J. B. SHOULDERS	DATE	11-11
DRAWN BY	G. W. KORNIKOSKI	DATE	06-12
SUPERVISED BY	T.E.H./J.W.F.	DATE	06-12
CHECKED BY	J. B. SHOULDERS	DATE	01-13

U-45-104

INTERCONNECTED PORTABLE BARRIER RAIL = 286 LF

MACHINED RIP-RAP (CLASS A-3) = 372 TONS

GN1058F.DGN

GENERAL NOTES

SPECIFICATIONS: STANDARD ROAD AND BRIDGE SPECIFICATIONS OF THE TENNESSEE DEPARTMENT OF TRANSPORTATION. (MARCH 1, 2006 EDITION).

LOADING: HL-93 LIVE LOADING, INCLUDING 35 PSF FOR FUTURE ASPHALT OVERLAY. SEISMIC DESIGN DATA: LATITUDE 35.9826°, LONGTITUDE -85.0135°; SITE CLASS B; FACTORED ACCELERATIONS: As = 0.091g, SDs = 0.194g, SD1 = 0.066g; SEISMIC ZONE 1; 7% PROBABILITY OF EXCEEDANCE IN 75 YEARS.

DESIGN SPECIFICATIONS: AASHTO LRFD FIFTH ADDITION 2010 WITH ADDENDA.

CONCRETE: TO BE CLASS "A" (CAST IN PLACE) f'c = 3000 PSI EXCEPT AS NOTED OTHERWISE.

NOTE: CLASS "D" CONCRETE FOR BRIDGE DECKS SHALL BE IN ACCORDANCE WITH SECTION 604 OF THE STANDARD SPECIFICATIONS.

BRIDGE DECK SURFACE FINISH: TO BE IN ACCORDANCE WITH NOTE "C" IN ARTICLE 604.22 OF THE STANDARD SPECIFICATIONS.

BRIDGE RAIL SYSTEM: BUILD BRIDGE RAILINGS ACCORDING TO STANDARD DWG. STD-1-1SS. THE BRIDGE RAIL SHALL BE FORMED AND CAST PLUMB, NOT PERPENDICULAR TO THE SLAB. THE DIMENSIONS AT THE FRONT OR TRAFFIC FACE OF THE PARAPET SHALL BE KEPT CONSTANT, WITH VARIATION DUE TO CROSS SLOPE ACCOMMODATED AT THE REAR FACE.

BRIDGE DECK FORMS: BRIDGE DECK FORMS FOR CONCRETE DECKS SHALL BE CONSTRUCTED USING EITHER REMOVABLE FORMS OR PERMANENT FORMS. PERMANENT FORMS SHALL BE REMAIN-IN-PLACE STEEL.
FORMS SHALL BE ATTACHED BY MEANS OTHER THAN WELDING TO MAIN STRUCTURAL MEMBERS OR REINFORCING STEEL. TEMPORARY ERECTION DIAPHRAGMS MUST BE USED AT THE ENDS OF PRECAST CONCRETE GIRDERS WHERE SUPPORT DIAPHRAGMS OR ABUTMENT BACKWALLS ARE TO BE POURED CONCURRENTLY WITH THE DECK AND SHALL BE PROVIDED ELSEWHERE IN ACCORDANCE WITH THE SPECIFICATIONS TO PREVENT GIRDER ROTATION. SEE STANDARD DRAWINGS STD-4-4, STD-14-1, AND ARTICLE 604.05 OF THE STANDARD SPECIFICATIONS.

SLAB OVERHANGS SUPPORTED BY BULB-TEE BEAMS: IT IS RECOMMENDED THAT SPACING OF OVERHANG BRACKETS FOR BULB-TEE BEAMS NOT EXCEED 2'-0" CENTER TO CENTER.

REINFORCING STEEL: SHALL BE ASTM A615 GRADE 60 UNLESS NOTED OTHERWISE. SEE SECTION 604 AND 907 OF THE STANDARD SPECIFICATIONS.

MACHINED RIP-RAP: MACHINED RIP-RAP FOR SLOPE PROTECTION SHALL BE 2" TO 6" IN SIZE UNIFORMLY GRADED AND MEET THE REQUIREMENTS OF SECTION 709 OF THE STANDARD SPECIFICATIONS FOR ROAD AND BRIDGE CONSTRUCTION AND SHALL BE MEASURED AND PAID FOR UNDER ROADWAY ITEM 709-05.05 - TON.

PILES: TO BE HP12X53 DRIVEN TO REFUSAL ON ROCK OR A MINIMUM BEARING OF 70 TONS AT ABUTMENTS.

NOTE: PILES SHALL BE EQUIPPED WITH CAST STEEL POINTS. ALSO SEE STD-5-1 FOR ADDITIONAL NOTES.

SPECIAL NOTE: AFTER EXCAVATION TO ROCK FOR FOOTING HAS BEEN COMPLETED, HOLES 6' DEEP SHALL BE DRILLED AT POINTS DESIGNATED BY THE ENGINEER. FROM THE RESULTS OBTAINED THE ENGINEER SHALL DETERMINE THE FINAL FOOTING ELEVATIONS. NO REINFORCING STEEL FOR BENT COLUMNS SHALL BE ORDERED UNTIL FINAL FOOTING ELEVATIONS HAVE BEEN DETERMINED.

NOTE: THE CONTRACTOR SHALL PROVIDE 100% CONVENTIONAL FALL PROTECTION FOR WORKERS INSTALLING DECKING ABOVE 15 FEET.

NOTE: ALL CONTRACTORS AND SUBCONTRACTORS DIRECTLY ENGAGED IN THE ERECTION OR DEMOLITION OF STRUCTURAL STEEL, PRECAST PRESTRESSED OR MILD STEEL REINFORCED CONCRETE BRIDGE BEAMS OR GIRDERS OVER ACTIVE HIGHWAY TRAFFIC LANES, ON ANY ROUTE, RAILROAD OR ANY STREAM DEEMED NAVIGABLE TO COMMERCIAL OR PLEASURE WATER CRAFT, SHALL BE REQUIRED TO SUBMIT AN ERECTION AND/OR DEMOLITION PLAN PREPARED AND STAMPED BY A TENNESSEE REGISTERED ENGINEER. THIS PLAN SHALL INCLUDE THE FOLLOWING: THE SEQUENCE OF ERECTION OR DEMOLITION, THE GENERALIZED LOCATION OF ALL PICK POINTS, AND THE CONTRACTOR'S PLAN TO ADEQUATELY STABILIZE THE STRUCTURE THROUGHOUT THE ERECTION OR DEMOLITION SEQUENCE, A COMPETENT CONTRACTOR'S REPRESENTATIVE WILL INSPECT THE BEAMS TO INSURE ADEQUATE STABILITY. NO WORK SHALL BE DONE UNTIL SUCH APPROVAL BY THE ENGINEER HAS BEEN OBTAINED. THE APPROVAL OF THE ENGINEER SHALL NOT BE CONSIDERED AS RELIEVING THE CONTRACTOR OF THE RESPONSIBILITY FOR THE SAFETY OF HIS METHOD OR EQUIPMENT OR FROM CARRYING OUT THE WORK IN ACCORDANCE WITH THE PLANS AND SPECIFICATIONS.

SHOP DRAWINGS: SEE SECTION 105.02 OF THE STANDARD SPECIFICATIONS.

VALUE ENGINEERING ALTERNATE BRIDGE DESIGN CRITERIA: ALTERNATE BRIDGE DESIGN PROPOSALS MAY NOT DIMINISH THE FUNCTIONAL OR STRUCTURAL EQUIVALENCY OF THE BRIDGE AND MUST MEET OR EXCEED BOTH THE SERVICE LEVEL AND ULTIMATE CAPACITIES OF THE CONTRACT PLANS STRUCTURE. FOR GRADE SEPERATIONS THE HORIZONTAL CLEARANCES MAY NOT BE REDUCED. NOR MAY THE VERTICAL CLEARANCES BE LESS THAN THE MINIMUM ACCEPTABLE FOR THE TYPE FACILITY CROSSED.

REQUIREMENTS AND RESTRICTIONS FOR PHASE CONSTRUCTION

1. THE LOCATION OF LONGITUDINAL CONSTRUCTION JOINTS SHALL NOT BE CHANGED TO ACCOMODATE REMAIN IN PLACE DECK FORMS.
2. NO SHEET PILES OR BEARING PILES MAY BE DRIVEN FROM THE EXISTING OR PROPOSED STRUCTURE.
3. TWO-12 FOOT TRAFFIC LANE SHALL BE MAINTAINED AT ALL TIMES.

FALSEWORK OVER TRAFFIC: SEE SECTION 604.06 OF THE STANDARD SPECIFICATIONS.

FINISHING CONCRETE SURFACES: CONCRETE FINISHING SHALL BE IN ACCORDANCE WITH SECTION 604.21 OF THE TENNESSEE STANDARD SPECIFICATION. A CLASS I FINISH FOLLOWED BY AN APPLIED TEXTURE FINISH SHALL BE USED IN LIEU OF A CLASS II FINISH. NO TEXTURE FINISH SHALL BE APPLIED PRIOR TO COMPLETION OF PAVING AND HAULING OPERATIONS AT THE BRIDGE SITE. THE APPLIED TEXTURE FINISH SHALL BE MEASURED AND PAID FOR UNDER ITEM 604-04.01.

SPECIAL NOTE FOR UTILITIES: IT IS INTENDED THAT THE COST OF MATERIALS AND LABOR NECESSARY FOR THE COMPLETE INSTALLATION OF UTILITIES SHALL BE BORNE BY OTHERS AND SHALL NOT BE PAID FOR AS A PART OF THIS CONTRACT. THE CONTRACTOR SHALL COOPERATE WITH OTHERS IN THE INSTALLATION OF UTILITIES WITH NO ADDITIONAL COMPENSATION ALLOWED THE CONTRACTOR AS A RESULT.

CONST. NO. 18011-3225-94

PROJECT NO.	YEAR	SHEET NO.
BR-STP-298(10)	2013	

REVISIONS

NO.	DATE	BY	BRIEF DESCRIPTION

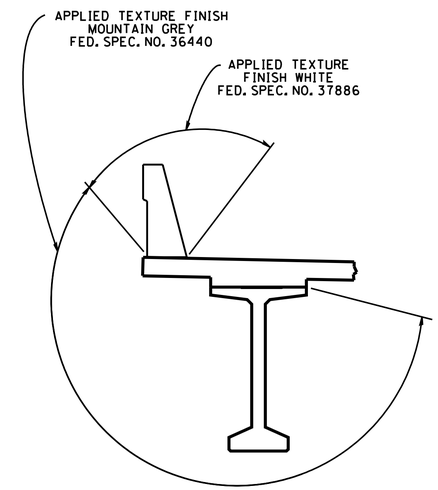

TYPICAL AT CANTILEVER

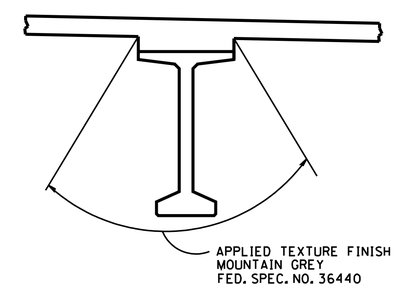

TYPICAL AT INTERIOR BEAMS

APPLIED TEXTURE FINISH SKETCH

NOTE: IN ADDITION TO THE SURFACES SHOWN IN THE APPLIED TEXTURE FINISH SKETCH, ALL EXPOSED SURFACES OF THE WINGWALLS, ABUTMENT BEAMS, EXTERIOR PORTIONS OF ENDWALLS, AND ALL EXPOSED SURFACES OF THE PIERS ARE TO RECEIVE AN APPLIED TEXTURE FINISH (MOUNTAIN GREY, FED. SPEC. NO. 36440).

ESTIMATED QUANTITIES

	ITEM NO.	DESCRIPTION	UNIT	TOTAL	SUPERSTRUCTURE	ABUTMENT NO. 1	BENT NO. 1	ABUTMENT NO. 2
3	202-04.01	REMOVAL OF STRUCTURES (BR. NO. 18-SR298-02.23)	L.S.	1				
2	204-02.01	DRY EXCAVATION (BRIDGES)	C.Y.	186		93		93
	204-04.01	ROCK EXCAVATION (BRIDGES)	C.Y.	6			6	
	204-05	ROCK DRILLING (BRIDGES)	L.F.	24			24	
6	303-01.02	GRANULAR BACKFILL (BRIDGES)	TON	54		27		27
	604-02.03	EPOXY COATED REINFORCING STEEL	LB	152,796	145,816	3,479		3,501
7	604-03.01	CLASS A CONCRETE (BRIDGES)	C.Y.	220		92	136	92
	604-03.02	STEEL BAR REINFORCEMENT (BRIDGES)	LB	58,338	1,689	10,479	35,631	10,539
1	604-03.04	PAVEMENT @ BRIDGE ENDS	S.Y.	444				
	604-03.09	CLASS D CONCRETE (BRIDGE DECK)	C.Y.	587	587			
	604-04.01	APPLIED TEXTURE FINISH (NEW STRUCTURES)	S.Y.	5,062				
	604-05.31	BRIDGE DECK GROOVING (MECHANICAL)	S.Y.	2,569				
	606-03.03	STEEL PILES (12 INCH)	L.F.	646				
9	606-03.06	PILE TIPS (STEEL PILES, 12 INCH)	EACH	34		17		17
8 4	615-01.11	PRESTRESSED CONCRETE BULB-TEE BEAM (6" WEB) (BT-63)	L.F.	2,330				
11	617-02	BRIDGE DECK CRACK SEALING	L.F.	238				
12	617-05	SEALANT (HMWM)	GAL.	4				
	620-05.01	CONCRETE PARAPET SINGLE SLOPE (STD-1-1SS)	L.F.	545				
5	710-09.01	6" PERFORATED PIPE WITH VERTICAL DRAIN SYSTEM	L.F.	220		110		110
	710-09.02	6" PIPE UNDERDRAIN	L.F.	34		17		17

1. NOTE: PRIOR TO CONSTRUCTION OF THE PAVEMENT AT BRIDGE ENDS, THE CONTRACTOR SHALL SUBMIT A PROPOSED BILL OF STEEL TO THE ENGINEER FOR APPROVAL.

2. EXCAVATION BASED ON FINAL PROFILE AT ABUTMENTS AND EXISTING GROUND LINE AT BENTS.

3. NOTE: LUMP SUM: EXISTING STRUCTURE BR. NO. 18-SR298-02.23 CONSISTS OF 4 SPANS AT 236'-10" OVERALL LENGTH AND OUT-TO-OUT WIDTH OF 36'-6". CONTINUOUS CONCRETE DECK DECK GIRDER BRIDGE WITH CONCRETE SUBSTRUCTURE TO BE REMOVED AFTER PHASE 1 CONSTRUCTION. FOR EXISTING LAYOUT AND SECTION SEE DWG. NO. K-44-6 THRU 12.

4. NOTE: COST OF ELASTOMERIC PADS AND RUBBER BONDING CEMENT TO BE INCLUDED IN THE UNIT PRICE BID FOR THE PRESTRESSED BEAM.

5. NOTE: COST OF POLYETHYLENE SHEETING AND ALL MISCELLANEOUS ITEMS NECESSARY FOR INSTALLATION TO BE INCLUDED IN THE UNIT PRICE BID FOR PERFORATED PIPE.

6. NOTE: GRANULAR BACKFILL SHALL BE CLASS "A" GRADING "D" MATERIAL. SEE STANDARD DRAWING STD-10-1.

7. NOTE: THE COST OF ALL MATERIALS AND LABOR NECESSARY FOR THE INSTALLATION OF 30 ANCHOR BOLT ASSEMBLIES SHALL BE INCLUDED IN THE UNIT PRICE BID FOR ITEM 604-03.01, CLASS "A" CONCRETE (BRIDGES).

8. INTERMEDIATE DIAPHRAGMS SHALL BE PAID FOR IN ACCORDANCE WITH STANDARD DRAWING STD-14-1.

9. THE UNIT PRICE BID FOR CAST STEEL POINTS SHALL INCLUDE FURNISHING AND INSTALLATION TO THE PILES.

10. NOTE: THE COST OF BITUMINOUS-FIBERBOARD, AND ALL MISCELLANEOUS JOINT MATERIAL TO BE INCLUDED IN THE UNIT PRICE BID FOR OTHER ITEMS.

11. INCLUDES ALL COSTS FOR INSTALLING THE BRIDGE DECK CRACK SEALER (HMWM) INCLUDING CRACK PREPARATION, CLEANING, LABOR, SAND, AND ALL MISCELLANEOUS MATERIAL REQUIRED TO SEAL CRACK ALONG THE PHASE CONSTRUCTION JOINT ACCORDING TO SPECIAL PROVISION 604CR AND MANUFACTURER'S SPECIFICATIONS. THIS ITEM DOES NOT INCLUDE THE COST OF FURNISHING THE CRACK SEALER.

12. INCLUDES THE COST OF FURNISHING THE SEALER MATERIAL (HMWM) FOR THE LONGITUDINAL PHASE CONSTRUCTION JOINT. THE SEALER SHALL BE IN ACCORDANCE WITH SPECIAL PROVISION 604CR. QUANTITIES FOR THIS ITEM MAY BE INCREASED OR DECREASED BY THE ENGINEER (TDOT).

STATE OF TENNESSEE
DEPARTMENT OF TRANSPORTATION
GENERAL NOTES AND ESTIMATED QUANTITIES
STATE ROUTE 298
OVER
INTERSTATE 40
STATION 117+69.10
CUMBERLAND COUNTY
2013

DESIGNED BY J. B. SHOULDERS DATE 11-11
DRAWN BY G. W. KORNIKOSKI DATE 06-12
SUPERVISED BY T.E.H./J.W.F. DATE 06-12
CHECKED BY J. B. SHOULDERS DATE 01-13

CORRECT
ENGINEER OF STRUCTURES

U-45-105

FD1058F.DGN

TENNESSEE D.O.T. DESIGN DIVISION

FILE NO. ---

CONST. NO.	18011-3225-94	
PROJECT NO.	YEAR	SHEET NO.
BR-STP-298(10)	2013	

REVISIONS

NO.	DATE	BY	BRIEF DESCRIPTION

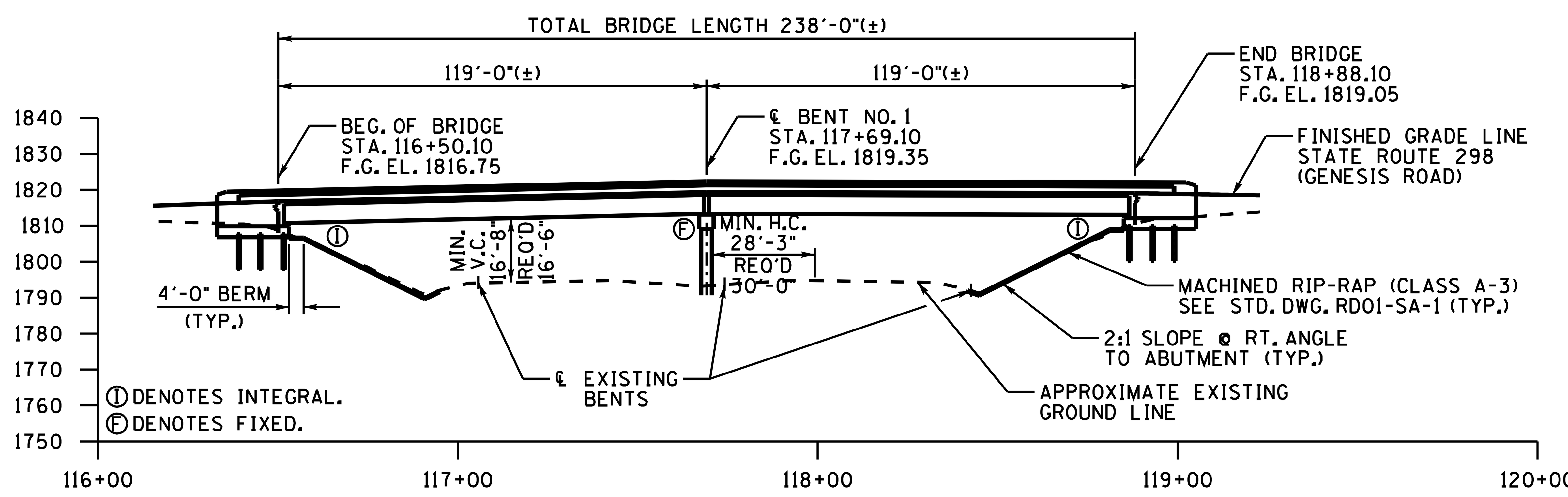

ELEVATION
SCALE 1" = 30'-0"

DESIGN SPECIFICATIONS: AASHTO LRFD FIFTH EDITION 2010 WITH ADDENDA.
SEISMIC DESIGN DATA: LATITUDE 35.9826°, LONGITUDE -85.0135°; SITE CLASS B; FACTORED ACCELERATIONS: As=0.091g, SDs=0.194g, SD1=0.066g; SEISMIC ZONE 1; 7% PROBABILITY OF EXCEEDANCE IN 75 YEARS.

1) CP-S3
STA. 845+09.95, 485.15' (RT)
N 601534.8291
E 2260388.7367
ELEV. 1799.84

2) CP-S4
STA. 842+66.43, 111.10' (RT)
N 601979.1542
E 2260431.0619
ELEV. 1796.43

3) CP-S5
STA. 842+82.33, 88.69' (LT)
N 602125.8098
E 2260568.0674
ELEV. 1794.80

BORING LOCATIONS

PT.	STATION	OFFSET DISTANCE	GROUND ELEVATION	ROCK ELEVATION
1	116+45	40' RT	1802.0	1786.9
2	116+55	90' LT	1802.0	1792.8
3	117+65	33' RT	1791.0	1785.9
4	117+68	10' RT	1791.0	1787.6
5	117+68	11' RT	1791.0	1787.6
6	117+70	11' LT	1791.0	1787.2
7	117+74	50' LT	1792.0	1789.0
8	118+86	40' RT	1804.0	1788.3
9	119+05	52'LT	1813.0	1791.4

NOTE: GROUND ELEVATIONS ARE APPROXIMATE SHOWN FOR REFERENCE ONLY.

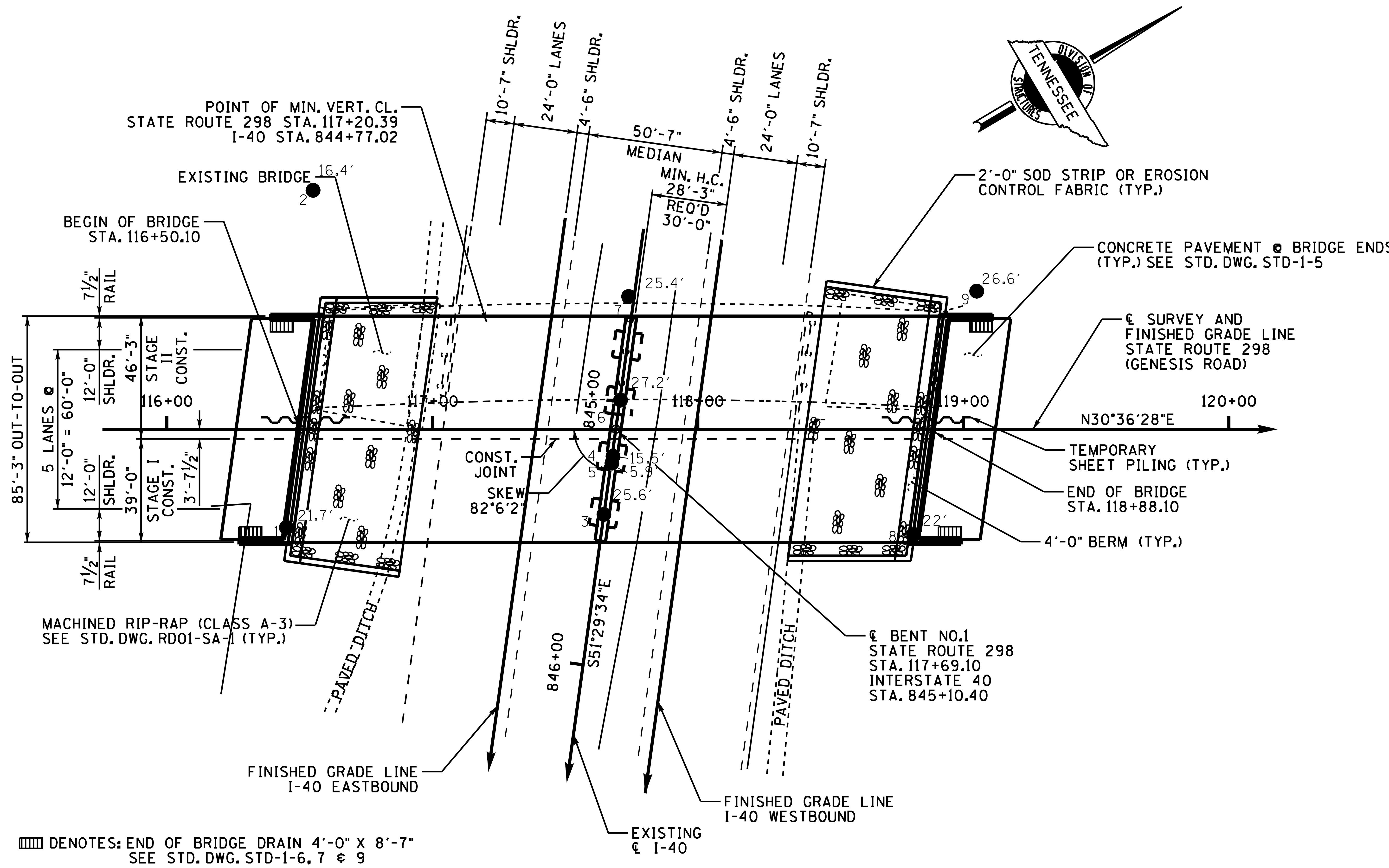

DENOTES: END OF BRIDGE DRAIN 4'-0" X 8'-7" SEE STD. DWG. STD-1-6, 7 & 9

PLAN
SCALE 1" = 30'-0"

NOTES:

REQUIRED:

1) SUFFICIENT GROUND, ROCK AND CORING INFORMATION FOR BRIDGE FOUNDATION.
2) APPROXIMATE EXISTING GROUND AND ROCK LINE.

NOTE: THIS DRAWING IS FOR FOUNDATION DATA ONLY AND IS NOT TO BE USED AS A LAYOUT.

2032 ADT = 22,370
84'-0" ROADWAY WITH STD-1-1SS BRIDGERAILS
DESIGN SPEED = 40 MPH

STATE OF TENNESSEE
DEPARTMENT OF TRANSPORTATION

FOUNDATION DATA
STATE ROUTE 298
OVER
INTERSTATE 40
BRIDGE I.D. NO. 18100400023
STATION 117+69.10
CUMBERLAND COUNTY
2013

CORRECT ______ ENGINEER OF STRUCTURES

U-45-106

DESIGNED BY J.B. SHOULDERS	DATE 11-2011
DRAWN BY J.B. SHOULDERS	DATE 11-2011
SUPERVISED BY JASON MILLER	DATE 11-2011
CHECKED BY JASON MILLER	DATE 11-2011

$$$$SYTIME$$$$ $$$$DGNSPEC$$$$

FD1058F.DGN

TENNESSEE D.O.T.
DESIGN DIVISION
FILE NO. ---

CONST. NO. 18011-3225-94

PROJECT NO.	YEAR	SHEET NO.
BR-STP-298(10)	2013	

REVISIONS

NO.	DATE	BY	BRIEF DESCRIPTION

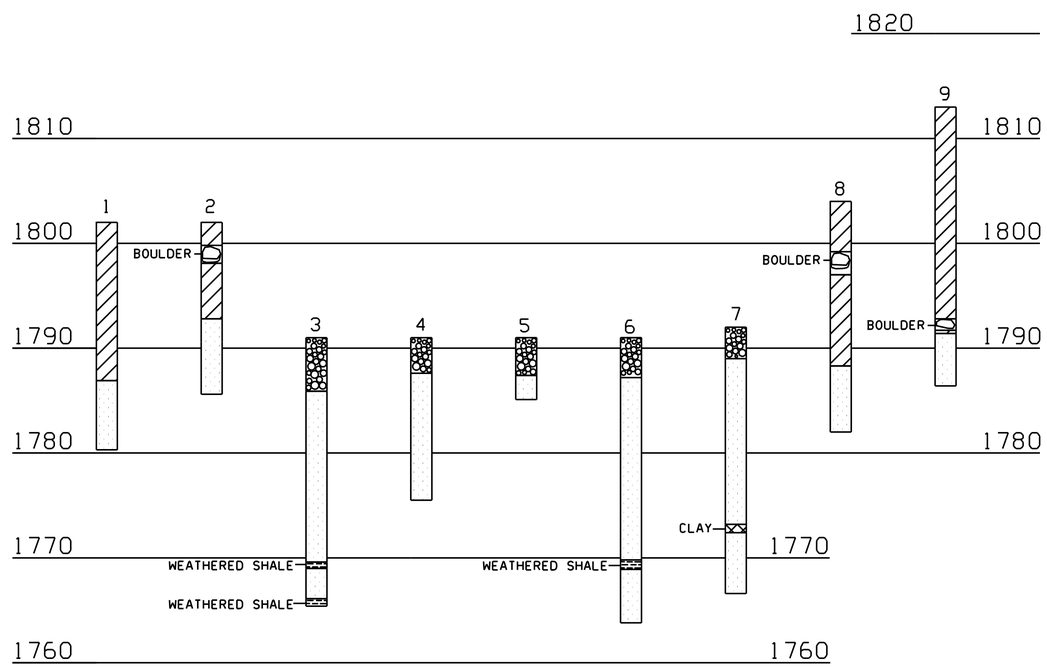

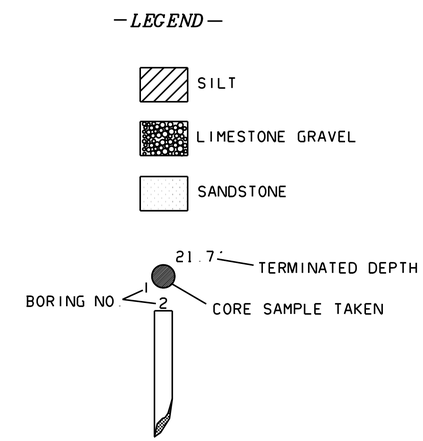

NOTE:

BORING DEPICTIONS SHOWN ON FOUNDATION DATA SHEET INDICATE GENERAL SOIL AND ROCK TYPES AT THE SPECIFIC BORING LOCATIONS.

TO ASSIST IN BID PREPARATION FOR FOUNDATION CONSTRUCTION DETAIL ROCK AND SOIL DESCRIPTION AND ROCK SAMPLES MAY BE AVAILABLE FOR INSPECTION.

CORRECT Dwayne G. Tayer
ENGINEER OF STRUCTURES

STATE OF TENNESSEE
DEPARTMENT OF TRANSPORTATION

FOUNDATION DATA
STATE ROUTE 298
OVER
INTERSTATE 40
BRIDGE I.D. NO. 18100400023
STATION 117+69.10
CUMBERLAND COUNTY
2013

U-45-107

7/25/2013 3:11:42 PM
G:\HUFF\Projects\REGION 2\Cumberland-SR298\FD1058f.dgn

SP1058F.DGN

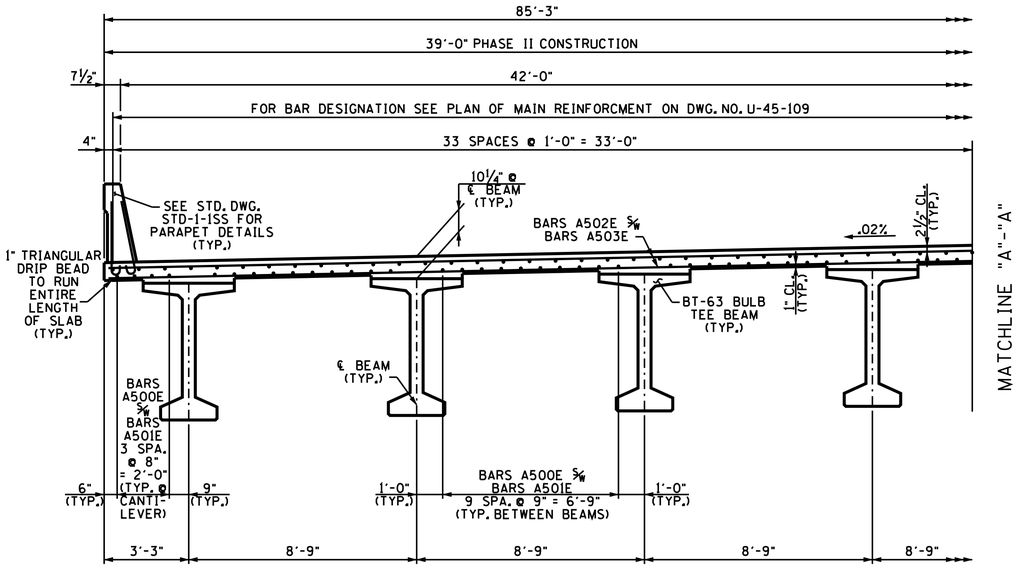

TYPICAL @ MIDSPAN

TYPICAL CROSS-SECTION

(LOOKING FORWARD ON SURVEY)

GENERAL NOTES:

NOTE: NO PORTION OF THE PARAPET SHALL BE POURED UNTIL THE ENTIRE DECK SLAB IS IN PLACE.

NOTE: THE CONTRACTOR IS SOLELY RESPONSIBLE FOR SUPPORTING THE BEAMS TO PREVENT DAMAGE DUE TO TWISTING OR OVERTURNING DURING ALL PHASES OF CONSTRUCTION. IT IS STRONGLY RECOMMENDED THAT THE TEMPORARY ERECTION DIAPHRAGMS BE INSTALLED AND THE PERMANENT INTERMEDIATE DIAPHRAGMS BE POURED AND CURED PRIOR TO PLACING ANY LOADS ON THE GIRDERS. HOWEVER, TEMPORARY ERECTION DIAPHRAGMS AND PERMANENT INTERMEDIATE DIAPHRAGMS MUST BE IN PLACE IN THE SPAN AT THE TIME THE SLAB IS POURED IN SAID SPAN.

NOTE: WHEN POURING SLAB, PROVISIONS SHALL BE MADE FOR SETTING REINFORCING STEEL FOR PARAPET. THE PARAPET SHALL NOT BE POURED UNTIL THE SLAB IS POURED AND CURED. ALSO SEE DWG. NO. STD-1-ISS.

NOTE: PRESTRESSED DECK PANELS ARE NOT ALLOWED.

CONST. NO. 18011-3225-94

PROJECT NO.	YEAR	SHEET NO.
BR-STP-298(10)	2013	

REVISIONS

NO.	DATE	BY	BRIEF DESCRIPTION

DECK CONCRETE POURING SEQUENCE: SLAB CONSTRUCTION JOINTS MAY BE LOCATED AT THE CONTRACTOR'S OPTION SUBJECT TO THE FOLLOWING:
1. NO CONSTRUCTION JOINT MAY BE LOCATED CLOSER THAN 10 FEET OR FURTHER THAN 15 FEET FROM AN INTERIOR SUPPORT.
2. THE SLAB IN THE MIDDLE SECTION OF BOTH ADJACENT SPANS MUST BE POURED TO WITHIN AT LEAST 15 FEET OF THE SUPPORTS EITHER PRIOR TO OR CONCURRENTLY WITH THE SLAB OVER AN INTERIOR SUPPORT.
3. ALL SLAB CONSTRUCTION JOINTS SHALL BE IN ACCORDANCE WITH THE SLAB CONSTRUCTION JOINT DETAIL SHOWN BELOW.

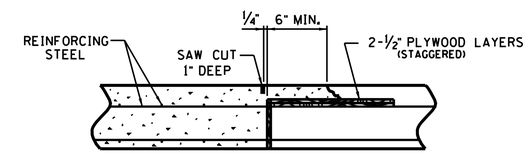

SLAB CONSTRUCTION JOINT DETAIL

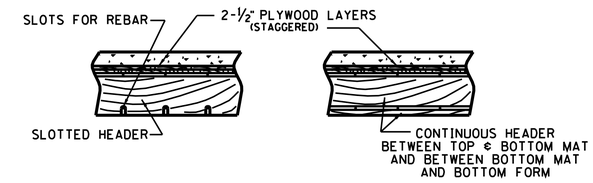

ALTERNATE "A" ALTERNATE "B"

ALTERNATE HEADER DETAILS

(THE CONTRACTOR MAY SUBMIT AN ALTERNATE DETAIL FOR APPROVAL)

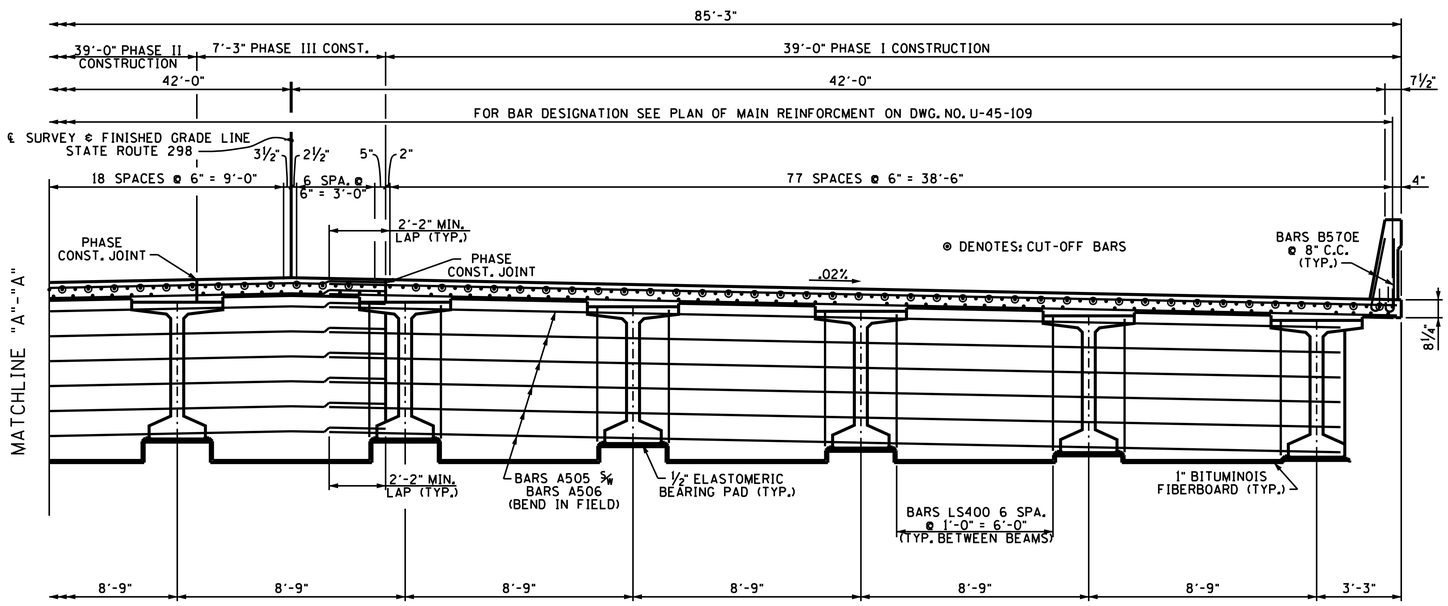

TYPICAL @ SUPPORT

TYPICAL CROSS-SECTION

(LOOKING FORWARD ON SURVEY)

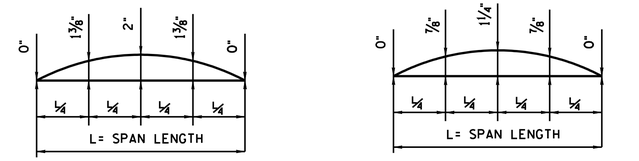

ALL BEAMS EXCEPT @ PHASE CONSTRUCTION JOINTS

BEAMS @ PHASE CONSTRUCTION JOINTS

DEAD LOAD CORRECTION CURVE

THIS CURVE IS FOR DEAD LOAD SLAB AND ALL DEAD LOADS THAT ARE APPLIED AFTER THE SLAB IS IN PLACE AND SHOULD BE CORRECTED TO COMPENSATE FOR THE EFFECTS DUE TO VERTICAL CURVE.

ESTIMATED QUANTITIES

CONCRETE CLASS "D" (BRIDGE DECK) C.Y.	EPOXY COATED REINFORCING STEEL LB.	REINFORCING STEEL L.B.
587	145,816	1,689

STATE OF TENNESSEE
DEPARTMENT OF TRANSPORTATION

SUPERSTRUCTURE
STATE ROUTE 298
OVER INTERSTATE 40
STATION 117+69.10
CUMBERLAND COUNTY
2013

DESIGNED BY J.B. SHOULDERS DATE 11-11
DRAWN BY T.R. KIRK DATE 6-12
SUPERVISED BY FIELDS / HUFF DATE 6-12
CHECKED BY J.B. SHOULDERS DATE 1-13

CORRECT Wayne G. Sieger
ENGINEER OF STRUCTURES

U-45-108

SP1058F.DGN

CONST. NO. 18011-3225-94

PROJECT NO.	YEAR	SHEET NO.
BR-STP-298(10)	2013	

REVISIONS

NO.	DATE	BY	BRIEF DESCRIPTION

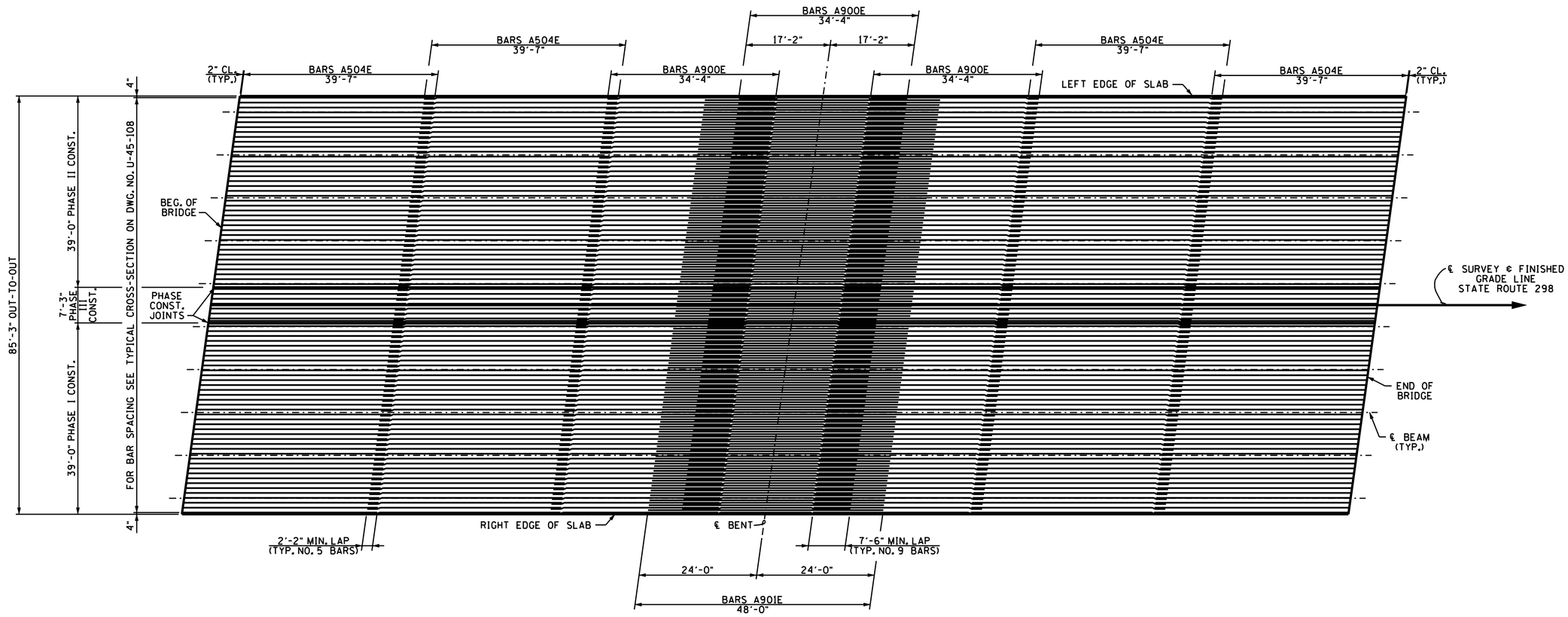

PLAN OF MAIN REINFORCEMENT
(TOP OF SLAB)

TIMOTHY E. HUFF
REGISTERED ENGINEER
No. 25113
AGRICULTURE
COMMERCE
No. 0002630
STATE OF TENNESSEE

STATE OF TENNESSEE
DEPARTMENT OF TRANSPORTATION
SUPERSTRUCTURE DETAILS
STATE ROUTE 298
OVER INTERSTATE 40
STATION 117+69.10
CUMBERLAND COUNTY
2013

DESIGNED BY J.B. SHOULDERS DATE 11-11
DRAWN BY T.R. KIRK DATE 6-12
SUPERVISED BY FIELDS / HUFF DATE 6-12
CHECKED BY J.B. SHOULDERS DATE 1-13

CORRECT
ENGINEER OF STRUCTURES

U-45-109

SP1058F.DGN

CONST. NO. 18011-3225-94

PROJECT NO.	YEAR	SHEET NO.
BR-STP-298(10)	2013	

REVISIONS

NO.	DATE	BY	BRIEF DESCRIPTION

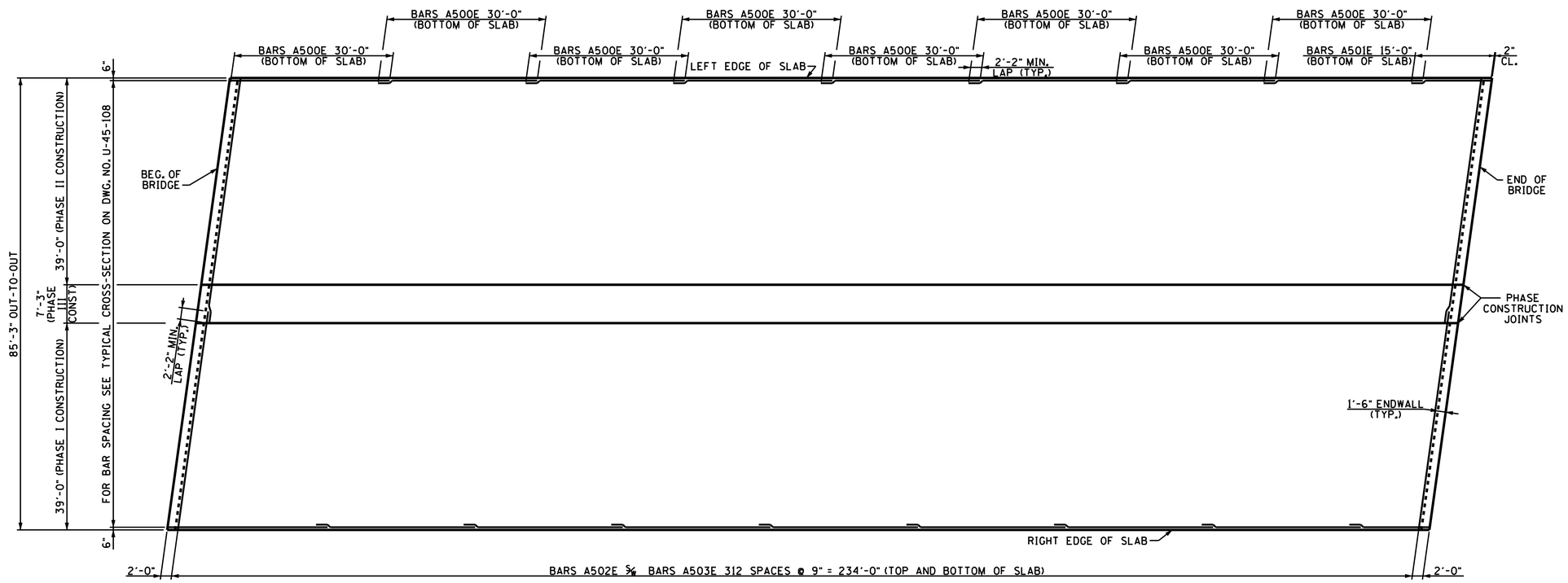

SLAB PLAN

STATE OF TENNESSEE
DEPARTMENT OF TRANSPORTATION
SUPERSTRUCTURE DETAILS
STATE ROUTE 298
OVER INTERSTATE 40
STATION 117+69.10
CUMBERLAND COUNTY
2013

DESIGNED BY J.B. SHOULDERS DATE 11-11
DRAWN BY T.R. KIRK DATE 6-12
SUPERVISED BY FIELDS / HUFF DATE 6-12
CHECKED BY J.B. SHOULDERS DATE 1-13

CORRECT Wayne J. Sieger
ENGINEER OF STRUCTURES

U-45-110

SP1058F.DGN

CONST. NO. 18011-3225-94

PROJECT NO.	YEAR	SHEET NO.
BR-STP-298(10)	2013	

REVISIONS

NO.	DATE	BY	BRIEF DESCRIPTION

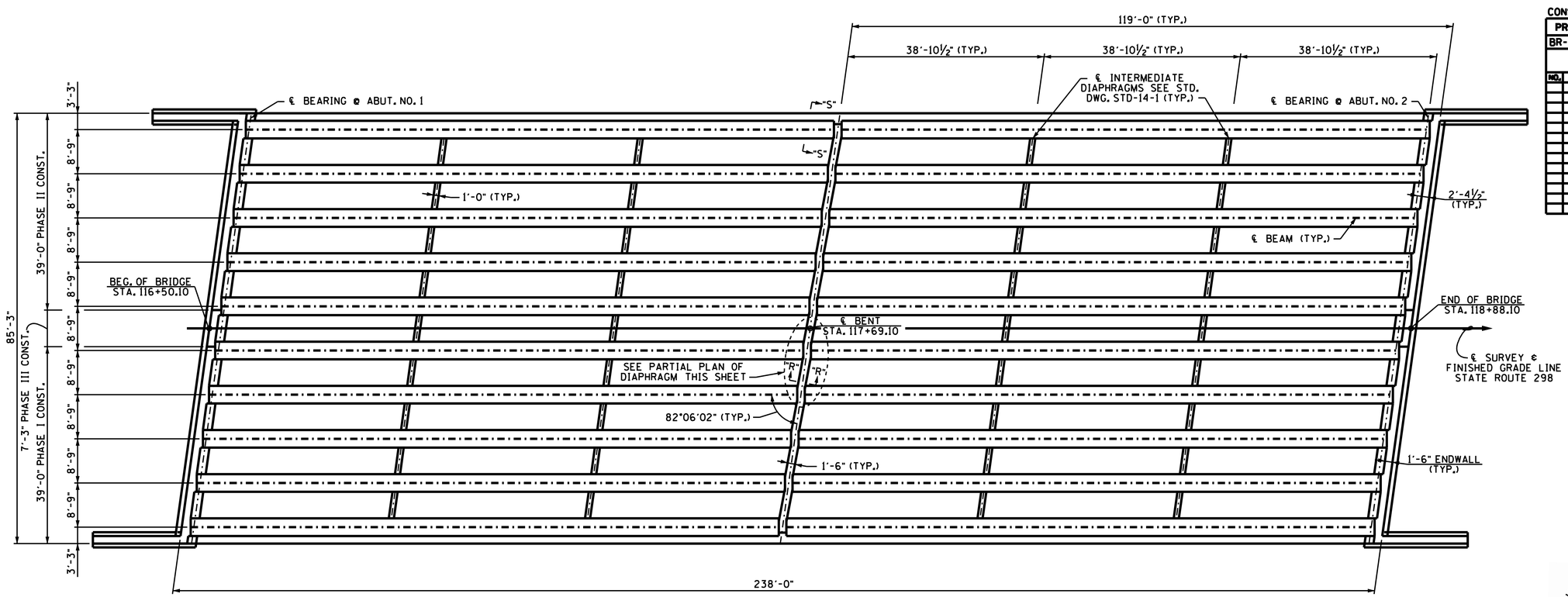

FRAMING PLAN

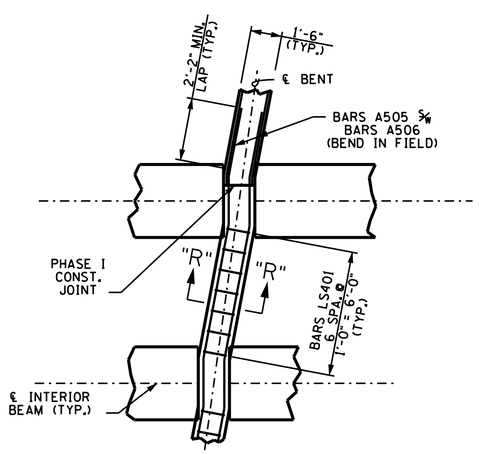

PARTIAL PLAN OF DIAPHRAGM

NOTE: THE SUPPORT DIAPHRAGMS AT THE BENT SHALL BE FORMED AND THE BOTTOM 15 INCHES POURED AS SOON AS POSSIBLE AFTER THE BEAMS HAVE BEEN SET. THE REMAINDER OF THE DIAPHRAGM SHALL BE POURED CONCURRENTLY WITH THE DECK SLAB. THE BEAMS SHALL ATTAIN AN AGE OF AT LEAST 90 DAYS PRIOR TO POURING THE REMAINDER OF THE SUPPORT DIAPHRAGMS AND DECK SLAB. ALL DIAPHRAGM CONCRETE SHALL BE INCLUDED IN THE QUANTITY FOR ITEM 604-03.09.

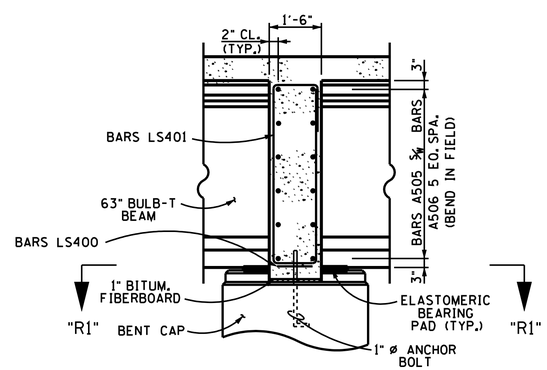

SECTION "R"-"R"

SPECIAL NOTE FOR ANCHOR BOLTS AT BENTS: ANCHOR BOLT ASSEMBLIES AT BENTS SHALL BE IN ACCORDANCE WITH STANDARD DRAWING STD-6-1.

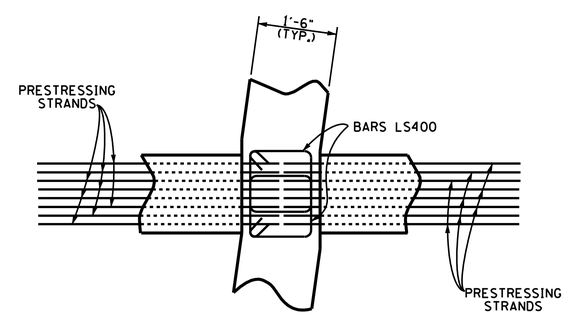

SECTION "R1"-"R1"

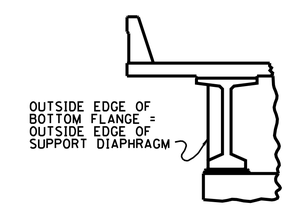

SECTION "S"-"S"

STATE OF TENNESSEE
DEPARTMENT OF TRANSPORTATION
SUPERSTRUCTURE DETAILS
STATE ROUTE 298
OVER INTERSTATE 40
STATION 117+69.10
CUMBERLAND COUNTY
2013

DESIGNED BY	J.B. SHOULDERS	DATE	11-11
DRAWN BY	T.R. KIRK	DATE	6-12
SUPERVISED BY	FIELDS / HUFF	DATE	6-12
CHECKED BY	J.B. SHOULDERS	DATE	1-13

CORRECT Wayne G. Sieger
ENGINEER OF STRUCTURES

U-45-111

PH1058F.DGN

CONST. NO. 18011-3225-94

PROJECT NO.	YEAR	SHEET NO.
BR-STP-298(10)	2013	

REVISIONS

NO.	DATE	BY	BRIEF DESCRIPTION

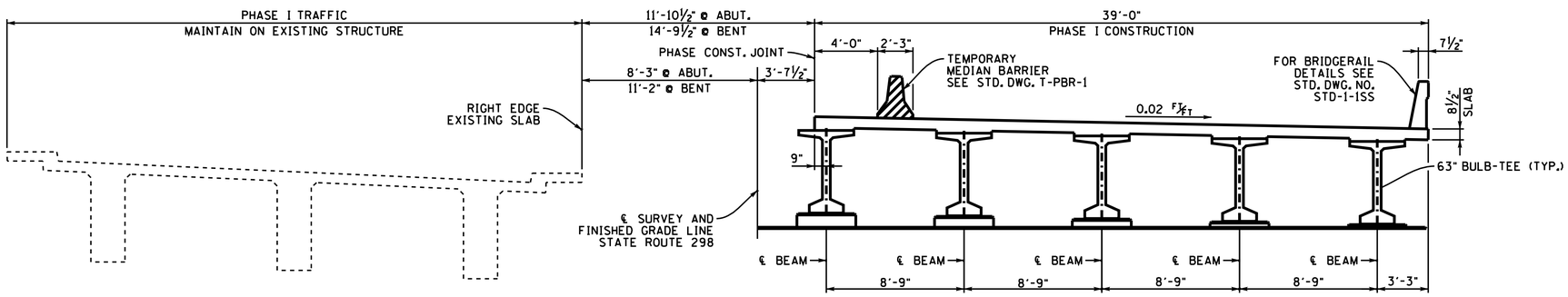

PHASE I CONSTRUCTION
(LOOKING FORWARD ON SURVEY)

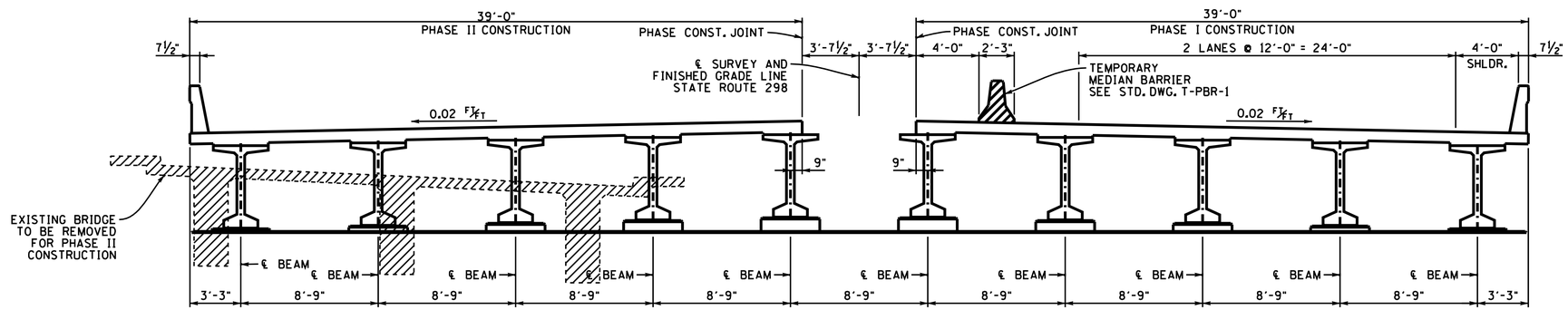

PHASE II CONSTRUCTION
(LOOKING FORWARD ON SURVEY)

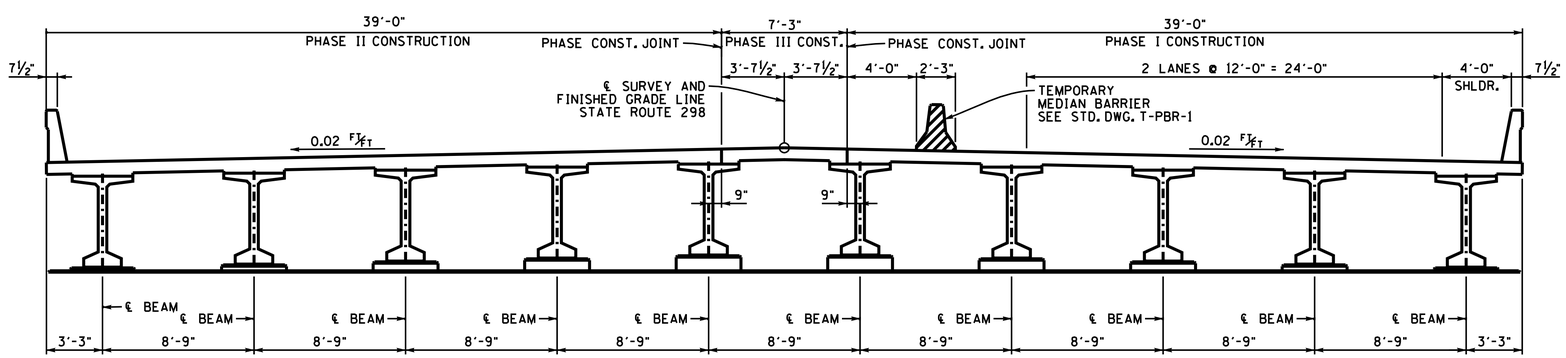

PHASE III CONSTRUCTION
(LOOKING FORWARD ON SURVEY)

STATE OF TENNESSEE
DEPARTMENT OF TRANSPORTATION

PHASE CONSTRUCTION DETAILS
STATE ROUTE 298
OVER INTERSTATE 40
STATION 117+69.10
CUMBERLAND COUNTY
2013

DESIGNED BY J.B. SHOULDERS DATE 05-12
DRAWN BY G. W. KORNIKOSKI DATE 06-12
SUPERVISED BY J.W.F./T.E.H. DATE 06-12
CHECKED BY J.B. SHOULDERS DATE 01-13

U-45-112

BT1058F.DGN

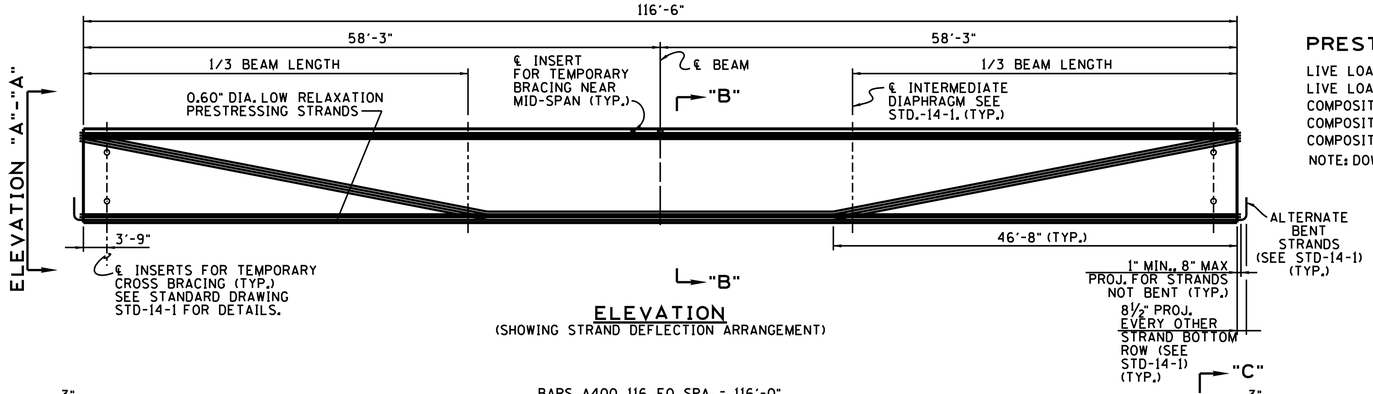

ELEVATION
(SHOWING STRAND DEFLECTION ARRANGEMENT)

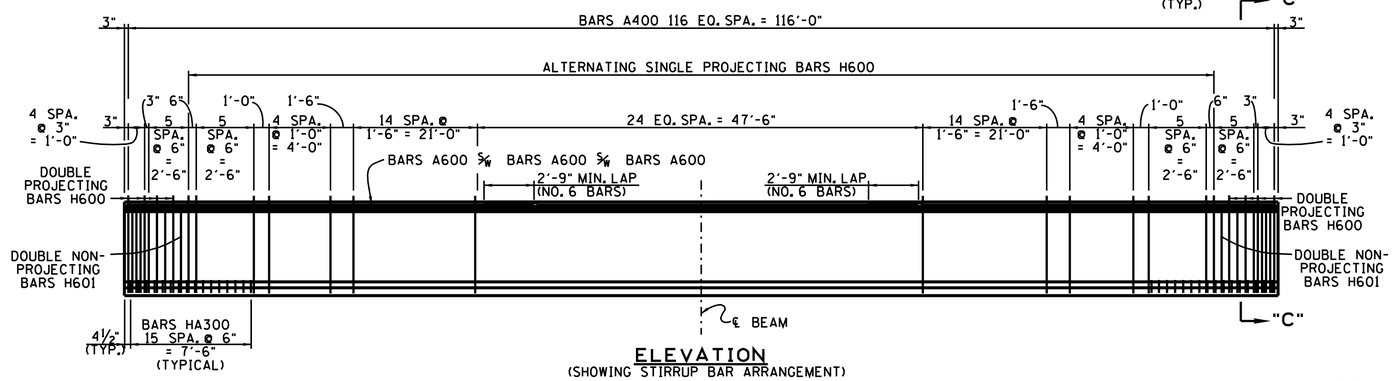

ELEVATION
(SHOWING STIRRUP BAR ARRANGEMENT)

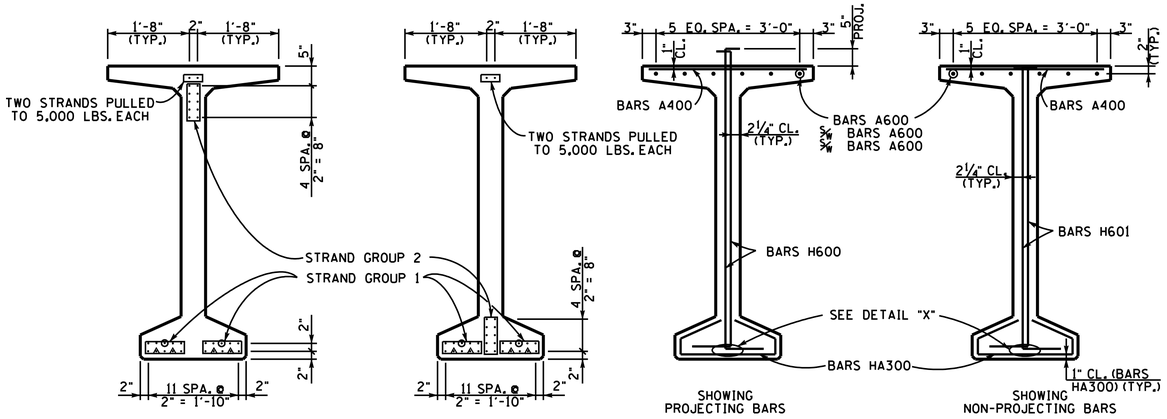

ELEVATION "A"-"A"
(SHOWING STRAND PATTERN @ BEAM END)
(TOTAL STRANDS = 32)

SECTION "B"-"B"
(SHOWING STRAND PATTERN @ MIDSPAN)

SECTION "C"-"C"

⊙ DENOTES: BREAK BOND 2'-0" FROM END OF BEAM.
△ DENOTES: BREAK BOND 4'-0" FROM END OF BEAM.

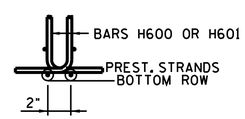

DETAIL "X"

PRESTRESSED BEAM DESIGN DATA - PER BEAM

LIVE LOAD DISTRIBUTION FACTOR: 0.794 LANES FOR MOMENT
LIVE LOAD DISTRIBUTION FACTOR: 0.885 LANES FOR SHEAR
COMPOSITE DEAD LOAD: DC = 75 LB./FT
COMPOSITE DEAD LOAD: DW = 290 LB./FT
COMPOSITE SLAB DESIGN STRENGTH: f'c = 3000 psi
NOTE: DOWNWARD DEFLECTION UNDER TOTAL DEAD LOAD IS not ALLOWED.

CONST. NO. 18011-3225-94

PROJECT NO.	YEAR	SHEET NO.
BR-STP-298(10)	2013	

REVISIONS

NO.	DATE	BY	BRIEF DESCRIPTION

NOTES:

NOTE: SEE STD-14-1 FOR BULB-TEE BEAM STANDARD DETAILS, NOTES, AND REINFORCING.

ALL BEAMS TO BE BT-63.

THE CONCRETE FOR THIS CONSTRUCTION SHALL BE OF SUCH PROPERTIES AS TO ATTAIN A COMPRESSIVE STRENGTH OF NOT LESS THAN 8,000 PSI AT THE AGE OF 28 DAYS AND STRESS TRANSFER SHALL NOT BE MADE TO THE BRIDGE MEMBER UNTIL THE TEST SPECIMENS INDICATE THAT THE CONCRETE HAS REACHED A COMPRESSIVE STRENGTH OF AT LEAST 6,000 PSI. SEE GENERAL NOTES FOR CONCRETE FINISHING NOTE.

ALL STRANDS ARE 0.60" DIA., 270K, 7 WIRE UNCOATED LOW-LAX; As = 0.217 IN². JACKING LOAD = 43,940 LBS.

ELASTOMERIC PADS TO BE ½" X 9" X 2'-2" AT ABUTMENTS AND ½" X 2'-2" X 3'-0" WITH 1½" DIA. HOLES AT BENTS.

BILL OF STEEL (PER BEAM)

BAR	SIZE	NO. REQ'D	LENGTH
A400	4	117	3'-2"
A500	5	6	5'-6"
A600	5	18	40'-6"
H600	6	93	6'-10"
H601	6	24	6'-4"
HA300	3	32	4'-7"

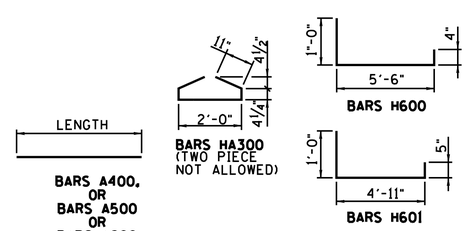

ESTIMATED QUANTITIES - PER BEAM

NO. BEAMS REQ'D. PER SPAN	PRESTRESSING STRANDS (LOW RELAXATION) LB.	CLASS "A" CONCRETE C.Y.	REINFORCING STEEL LB.
10	2,800	21.3	2,615

STATE OF TENNESSEE
DEPARTMENT OF TRANSPORTATION

PRESTRESSED BULB-TEE
BEAM DETAILS
STATE ROUTE 298
OVER
INTERSTATE 40
STATION 117+69.10
CUMBERLAND COUNTY
2013

CORRECT Wayne G. Sieg
ENGINEER OF STRUCTURES

U-45-113

DESIGNED BY J. B. SHOULDERS DATE 11-11
DRAWN BY G.W. KORNIKOSKI DATE 06-12
SUPERVISED BY JWF / TEH DATE 06-12
CHECKED BY J. B. SHOULDERS DATE 01-13

AB1058F.DGN

CONST. NO.	18011-3225-94	
PROJECT NO.	YEAR	SHEET NO.
BR-STP-298(10)	2013	

REVISIONS

NO.	DATE	BY	BRIEF DESCRIPTION

N.S. DENOTES: NEAR SIDE
F.S. DENOTES: FAR SIDE
P.C.O. DENOTES: PILE CUT-OFF

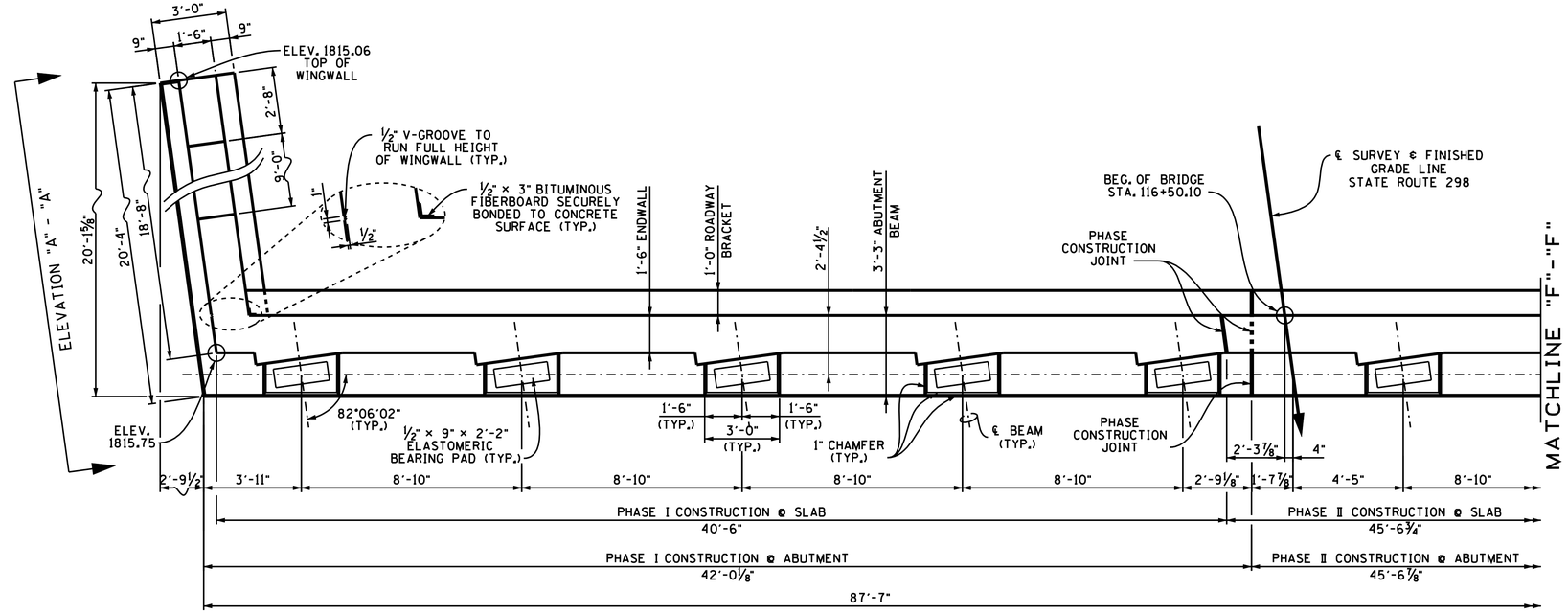

PLAN

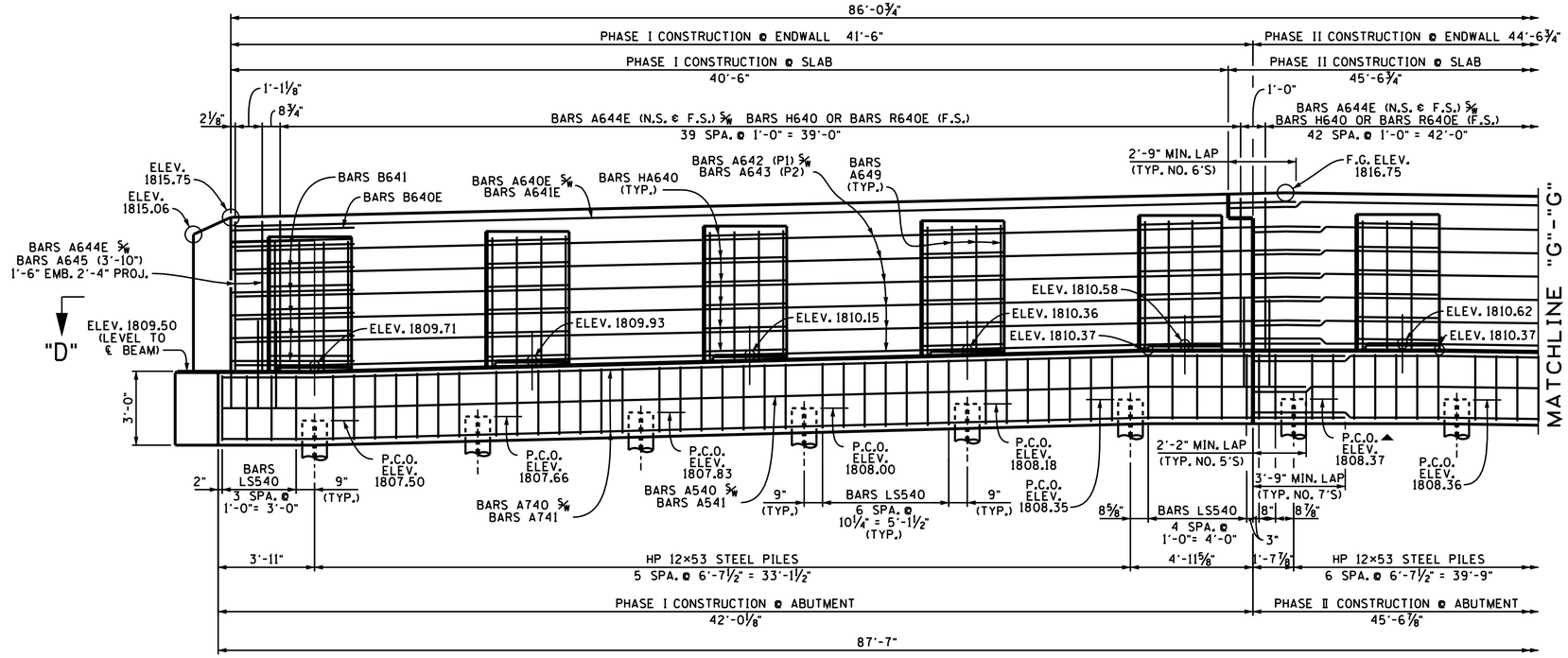

ELEVATION
(LOOKING BACK ON SURVEY)

▲ DENOTES: THIS PILE MUST BE DRIVEN BEFORE PHASE I CONSTRUCTION DUE TO PROTRUDING BARS.

ABUTMENT GENERAL NOTES

NOTE: RISER BLOCKS SHALL BE POURED MONOLITHICALLY WITH THE ABUTMENT BEAM.
NOTE: WHEN POURING WINGWALLS, PROVISIONS SHALL BE MADE FOR SETTING REINFORCING STEEL FOR WINGPOST. FOR DETAILS OF WINGPOSTS AND PARAPETS, SEE STD. DWG. NO. STD-1-1SS.
NOTE: NOT LESS THAN HALF OF THE SLAB IN THE END SPAN SHALL BE POURED PRIOR TO, OR CONCURRENTLY WITH, PLACEMENT OF ANY PART OF THE ABUTMENT BACKWALL. AT LEAST THE TOP 12 INCHES OF THE BACKWALL SHALL BE POURED CONCURRENTLY WITH THE END OF SLAB.
NOTE: COST OF BRIDGE RAIL AND POST IS TO BE INCLUDED IN THE UNIT PRICE BID FOR BRIDGE RAIL SYSTEM.
NOTE: ELASTOMERIC PADS SHALL BE IN PLACE A MINIMUM OF ONE DAY BEFORE BEING DISTURBED BY SETTING BEAMS. PLACE RUBBER BONDING CEMENT IN SUCH A WAY THAT VISIBLE CONCRETE SURFACES WILL NOT BE STAINED.
NOTE: WINGBEAM PILES SHALL BE DRIVEN TO THE PLANS TIP ELEVATION OR REFUSAL. SEISMIC ATTACHMENT IS NOT REQUIRED FOR WINGBEAM PILES.
NOTE: FOR ELEVATION "A"-"A" & ELEVATION "B"-"B" SEE DWG NO. U-045-120.
FOR SECTION "C"-"C" SEE DWG NO. U-045-115.
FOR SECTION "D"-"D" SEE DWG NO. U-045-116.
FOR SECTION "E"-"E" SEE DWG NO. U-045-120.

ESTIMATED QUANTITIES		
CLASS "A" CONCRETE (BRIDGES) C.Y.	STEEL BAR REINFORCEMENT (BRIDGES) LB.	EPOXY COATED REINFORCING STEEL (BRIDGES) LB.
92	10,479	3,479

STATE OF TENNESSEE
DEPARTMENT OF TRANSPORTATION

ABUTMENT NO. 1
STATE ROUTE 298
OVER
INTERSTATE 40
STATION 117+69.10
CUMBERLAND COUNTY
2013

CORRECT Wayne G. Sieger
ENGINEER OF STRUCTURES

DESIGNED BY	J. B. SHOULDERS	DATE	02-12
DRAWN BY	RODNEY CHANDLER	DATE	06-12
SUPERVISED BY	T.E.H. / J.W.F.	DATE	06-12
CHECKED BY	J.B. SHOULDERS	DATE	01-13

U-045-114

AB1058F.DGN

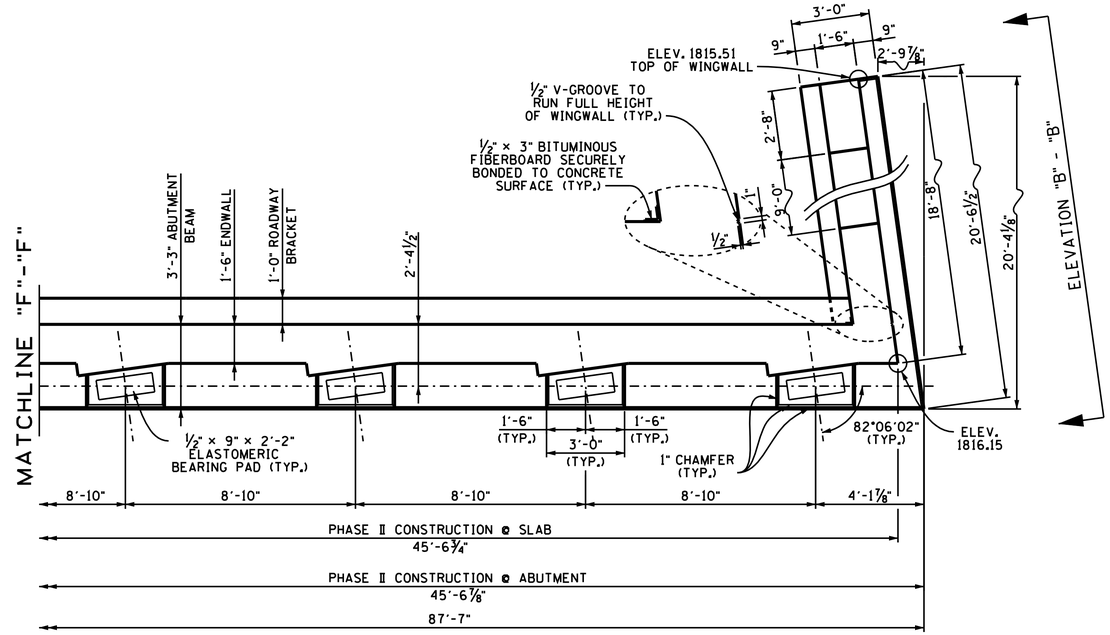

PLAN

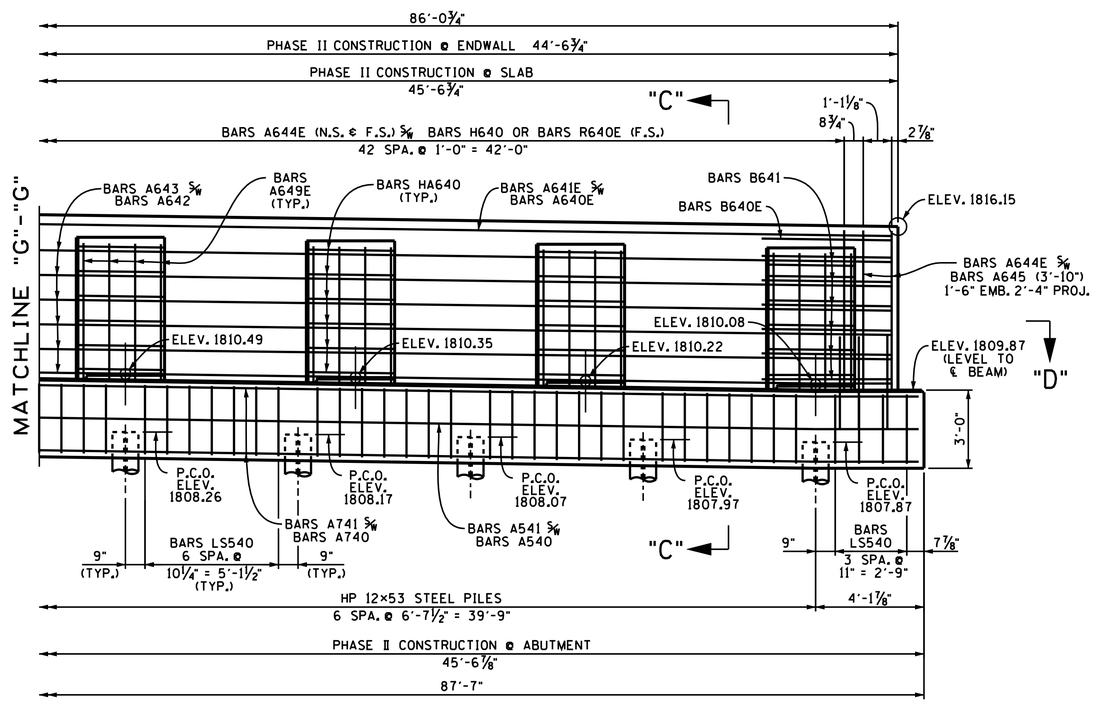

ELEVATION
(LOOKING BACK ON SURVEY)

DIRECTION OF SURVEY

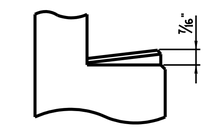

RISER BLOCK SLOPE DETAIL

NOTE: RISER BLOCK BEARING PAD SURFACES TO CONFORM TO BOTTOM OF BEAM GRADE.

CONST. NO. 18011-3225-94

PROJECT NO.	YEAR	SHEET NO.
BR-STP-298(10)	2013	

REVISIONS

NO.	DATE	BY	BRIEF DESCRIPTION

N.S. DENOTES: NEAR SIDE
F.S. DENOTES: FAR SIDE
P.C.O. DENOTES: PILE CUT-OFF

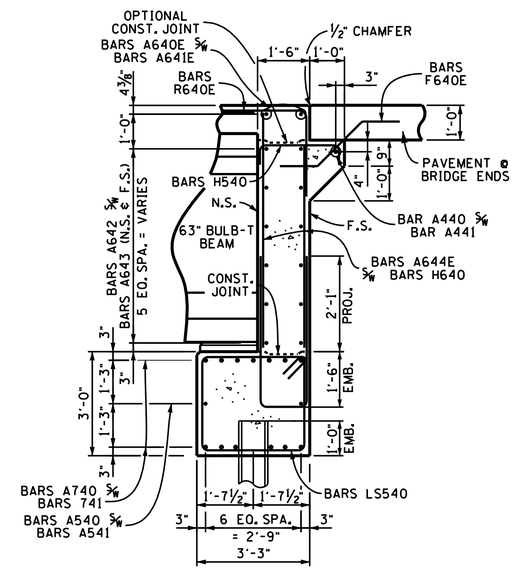

SECTION "C"-"C"

STATE OF TENNESSEE
DEPARTMENT OF TRANSPORTATION
ABUTMENT NO. 1 DETAILS
STATE ROUTE 298
OVER
INTERSTATE 40
STATION 117+69.10
CUMBERLAND COUNTY
2013

CORRECT
ENGINEER OF STRUCTURES

DESIGNED BY J.B. SHOULDERS DATE 02-12
DRAWN BY RODNEY CHANDLER DATE 06-12
SUPERVISED BY T.E.H. / J.W.F. DATE 06-12
CHECKED BY J.B. SHOULDERS DATE 01-13

U-045-115

AB1058F.DGN

CONST. NO.	18011-3225-94	
PROJECT NO.	YEAR	SHEET NO.
BR-STP-298(10)	2013	

REVISIONS

NO.	DATE	BY	BRIEF DESCRIPTION

N.S. DENOTES: NEAR SIDE
F.S. DENOTES: FAR SIDE

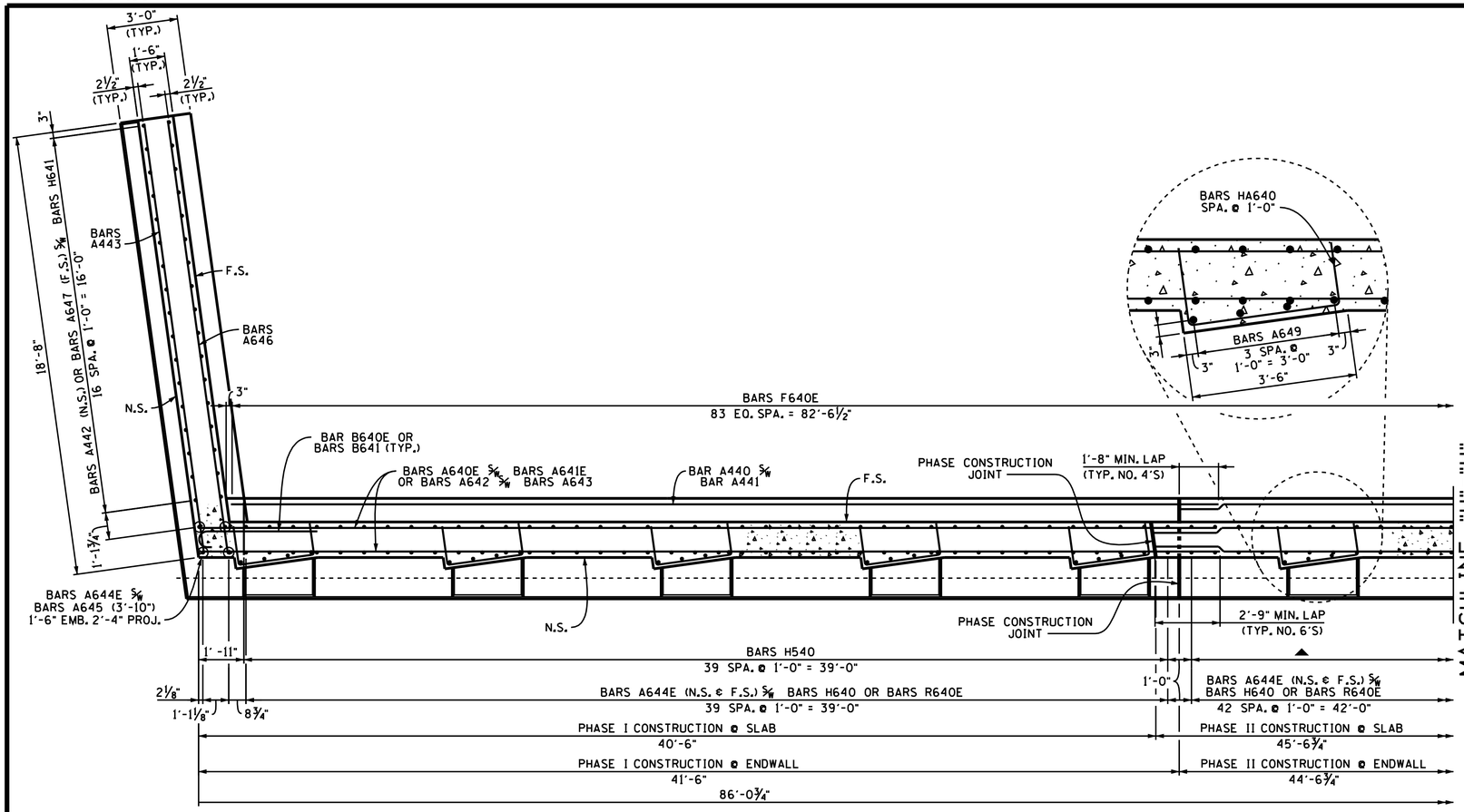

▲ DENOTES: BARS H540 42 SPA. @ 1'-0" = 42'-0"

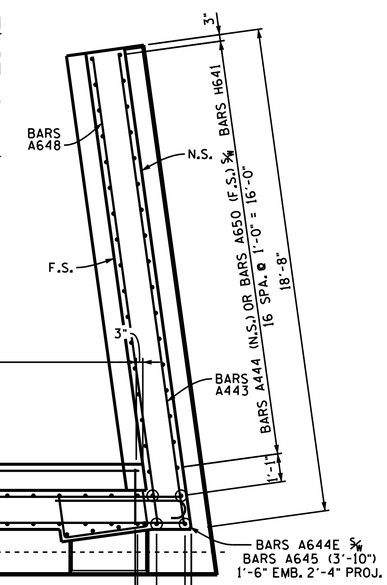

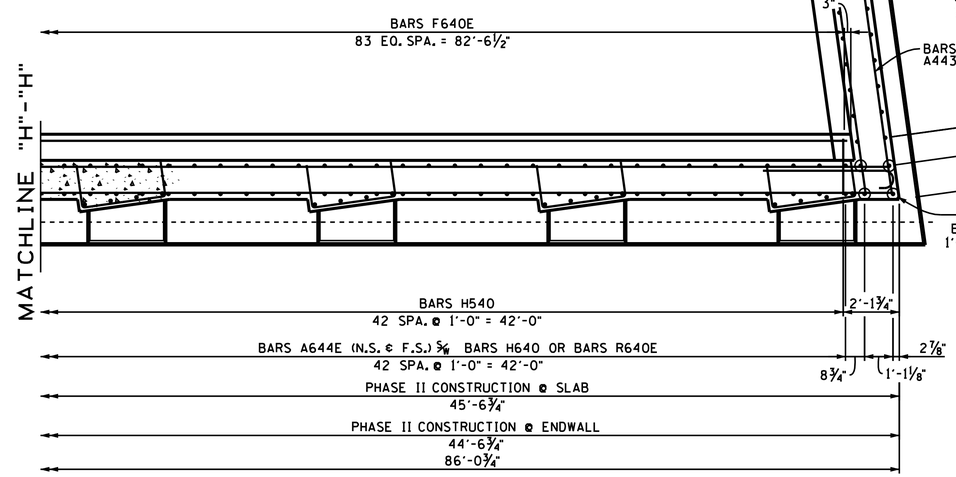

SECTION "D"-"D"

STATE OF TENNESSEE
DEPARTMENT OF TRANSPORTATION
ABUTMENT NO. 1 DETAILS
STATE ROUTE 298
OVER
INTERSTATE 40
STATION 117+69.10
CUMBERLAND COUNTY
2013

CORRECT Wayne A. Sayer
ENGINEER OF STRUCTURES

DESIGNED BY J.B. SHOULDERS DATE 02-12
DRAWN BY RODNEY CHANDLER DATE 06-12
SUPERVISED BY T.E.H. / J.W.F. DATE 06-12
CHECKED BY J.B. SHOULDERS DATE 01-13

U-045-116

AB1058F.DGN

CONST. NO.	18011-3225-94	
PROJECT NO.	YEAR	SHEET NO.
BR-STP-298(10)	2013	

REVISIONS

NO.	DATE	BY	BRIEF DESCRIPTION

N.S. DENOTES: NEAR SIDE
F.S. DENOTES: FAR SIDE
P.C.O. DENOTES: PILE CUT-OFF

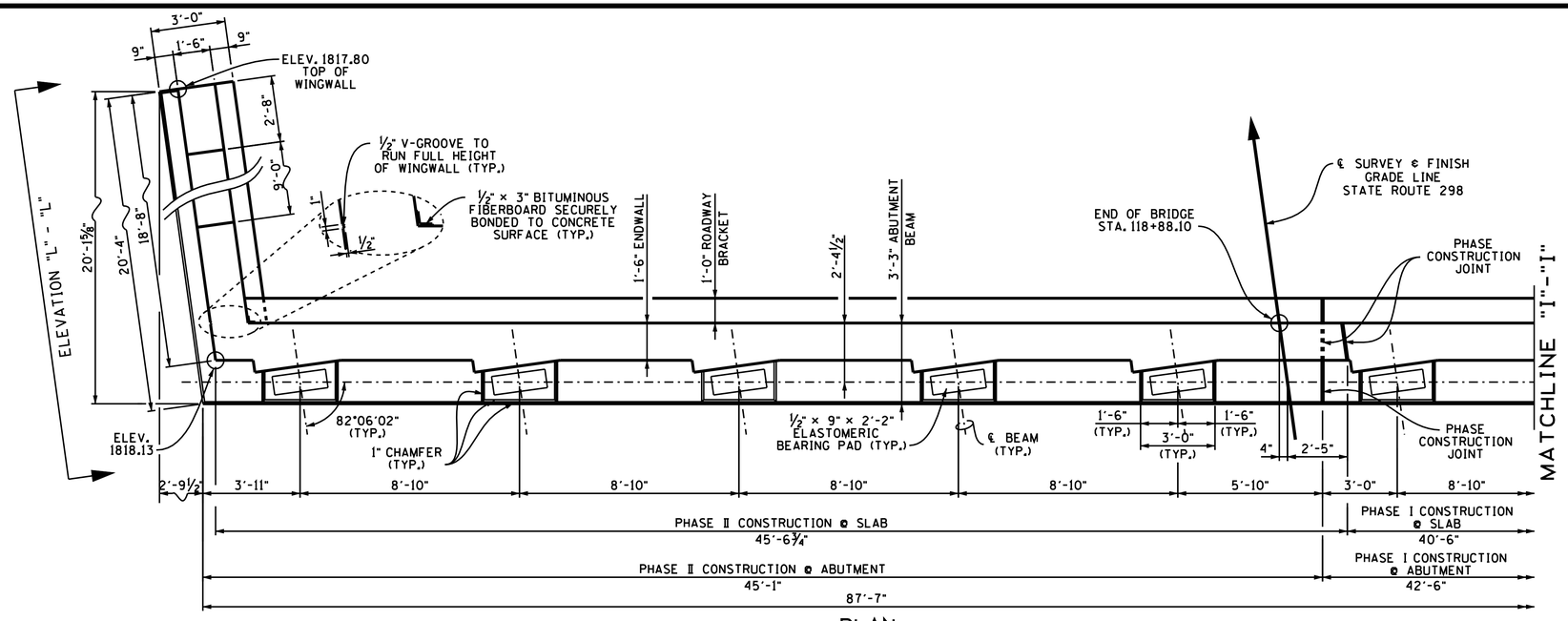

PLAN

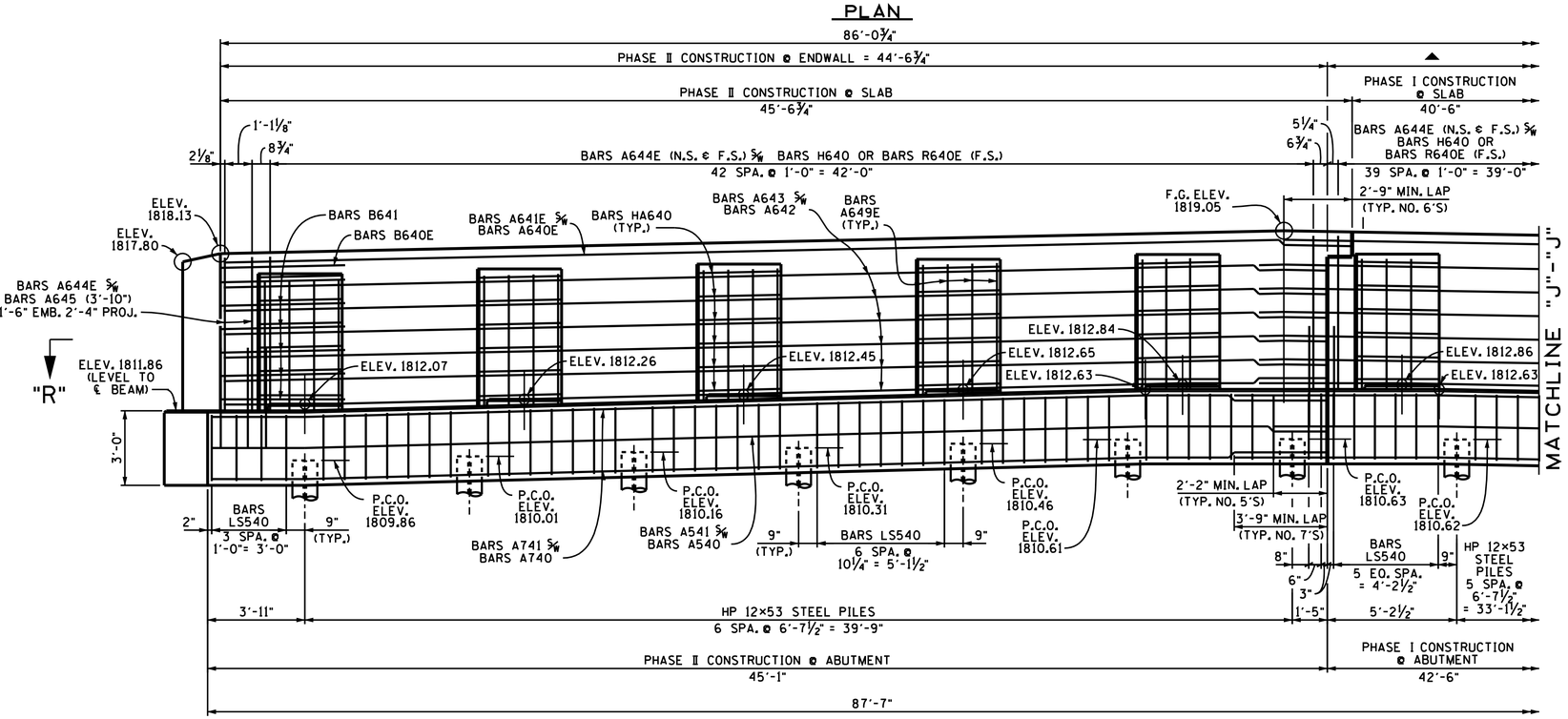

ELEVATION
(LOOKING FORWARD ON SURVEY)

▲ DENOTES: PHASE I CONSTRUCTION @ ENDWALL 41'-6"

ABUTMENT GENERAL NOTES

NOTE: RISER BLOCKS SHALL BE POURED MONOLITHICALLY WITH THE ABUTMENT BEAM.
NOTE: WHEN POURING WINGWALLS, PROVISIONS SHALL BE MADE FOR SETTING REINFORCING STEEL FOR WINGPOST. FOR DETAILS OF WINGPOSTS AND PARAPETS, SEE STD. DWG. NO. STD-1-1SS PARAPETS.
NOTE: NOT LESS THAN HALF OF THE SLAB IN THE END SPAN SHALL BE POURED PRIOR TO, OR CONCURRENTLY WITH, PLACEMENT OF ANY PART OF THE ABUTMENT BACKWALL. AT LEAST THE TOP 12 INCHES OF THE BACKWALL SHALL BE POURED CONCURRENTLY WITH THE END OF SLAB.
NOTE: COST OF BRIDGE RAIL AND POST IS TO BE INCLUDED IN THE UNIT PRICE BID FOR BRIDGE RAIL SYSTEM.
NOTE: ELASTOMERIC PADS SHALL BE IN PLACE A MINIMUM OF ONE DAY BEFORE BEING DISTURBED BY SETTING BEAMS. PLACE RUBBER BONDING CEMENT IN SUCH A WAY THAT VISIBLE CONCRETE SURFACES WILL NOT BE STAINED.
NOTE: WINGBEAM PILES SHALL BE DRIVEN TO THE PLANS TIP ELEVATION OR REFUSAL. SEISMIC ATTACHMENT IS NOT REQUIRED FOR WINGBEAM PILES.
NOTE: FOR ELEVATION "L"-"L" & ELEVATION "M"-"M" SEE DWG NO. U-045-120.
FOR SECTION "P"-"P" SEE DWG NO. U-045-118.
FOR SECTION "R"-"R" SEE DWG NO. U-045-119.
FOR SECTION "N"-"N" SEE DWG NO. U-045-120.

ESTIMATED QUANTITIES		
CLASS "A" CONCRETE (BRIDGES) C.Y.	STEEL BAR REINFORCEMENT (BRIDGES) LB.	EPOXY COATED REINFORCING STEEL (BRIDGES) LB.
92	10,539	3,501

STATE OF TENNESSEE
DEPARTMENT OF TRANSPORTATION
ABUTMENT NO. 2
STATE ROUTE 298
OVER
INTERSTATE 40
STATION 117+69.10
CUMBERLAND COUNTY
2013

CORRECT
ENGINEER OF STRUCTURES

DESIGNED BY J.B. SHOULDERS DATE 02-12
DRAWN BY RODNEY CHANDLER DATE 06-12
SUPERVISED BY T.E.H. / J.W.F. DATE 06-12
CHECKED BY J.B. SHOULDERS DATE 01-13

U-045-117

AB1058F.DGN

CONST. NO.	18011-3225-94	
PROJECT NO.	YEAR	SHEET NO.
BR-STP-298(10)	2013	

REVISIONS

NO.	DATE	BY	BRIEF DESCRIPTION

N.S. DENOTES: NEAR SIDE
F.S. DENOTES: FAR SIDE
P.C.O. DENOTES: PILE CUT-OFF

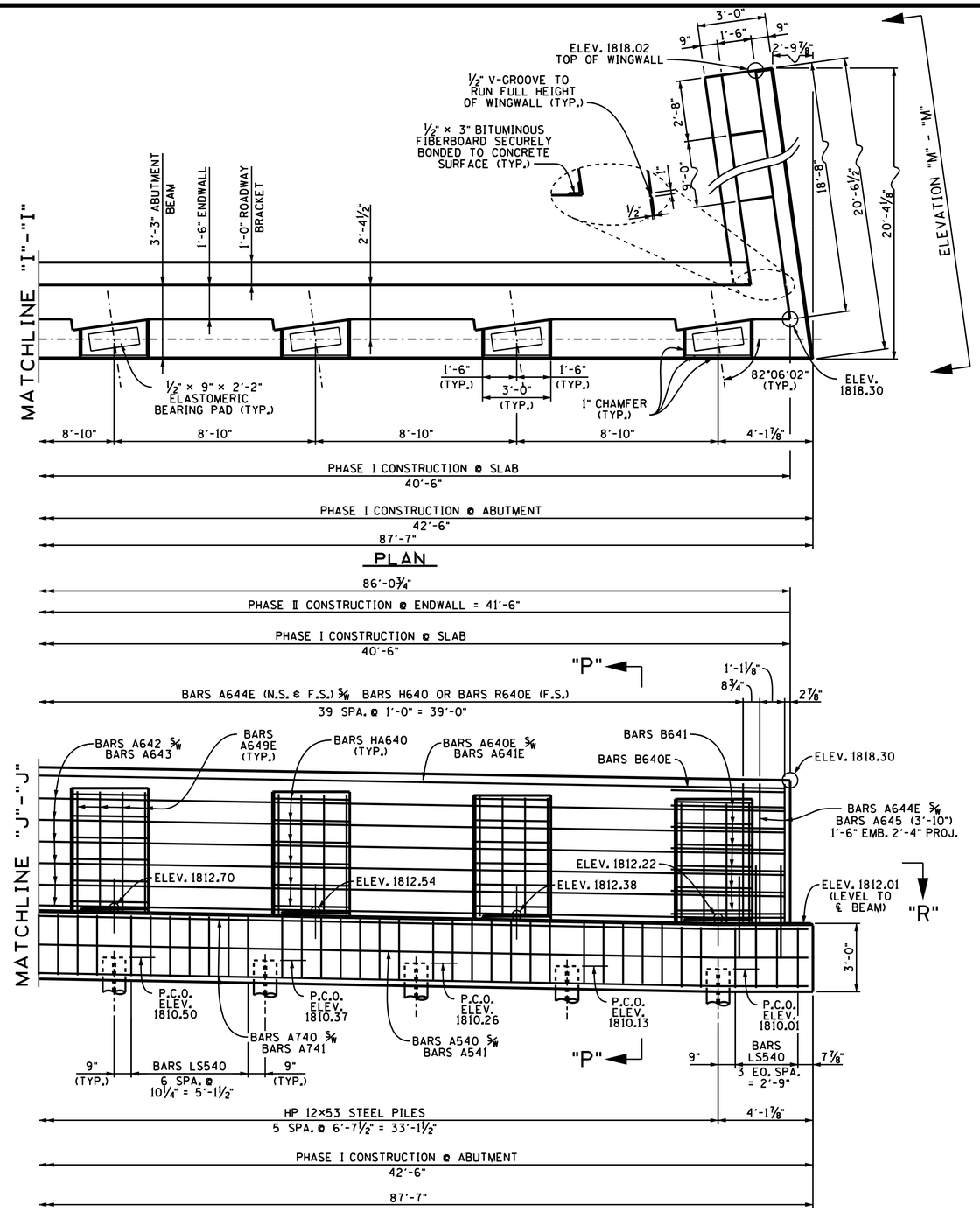

ELEVATION
(LOOKING FORWARD ON SURVEY)

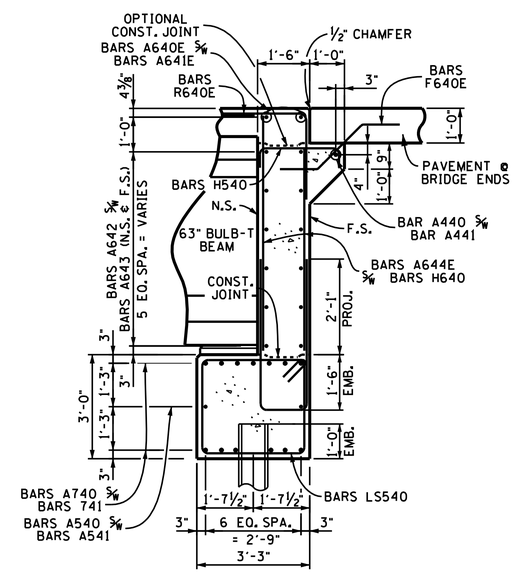

SECTION "P"-"P"

STATE OF TENNESSEE
DEPARTMENT OF TRANSPORTATION
ABUTMENT NO. 2 DETAILS
STATE ROUTE 298
OVER
INTERSTATE 40
STATION 117+69.10
CUMBERLAND COUNTY
2013

CORRECT Wayne G. Sayer
ENGINEER OF STRUCTURES

U-045-118

DESIGNED BY J. B. SHOULDERS DATE 02-12
DRAWN BY RODNEY CHANDLER DATE 06-12
SUPERVISED BY T.E.H. / J.W.F. DATE 06-12
CHECKED BY J.B. SHOULDERS DATE 01-13

AB1058F.DGN

CONST. NO.	18011-3225-94	
PROJECT NO.	YEAR	SHEET NO.
BR-STP-298(10)	2013	

REVISIONS

NO.	DATE	BY	BRIEF DESCRIPTION

N.S. DENOTES: NEAR SIDE
F.S. DENOTES: FAR SIDE
P.C.O. DENOTES: PILE CUT-OFF

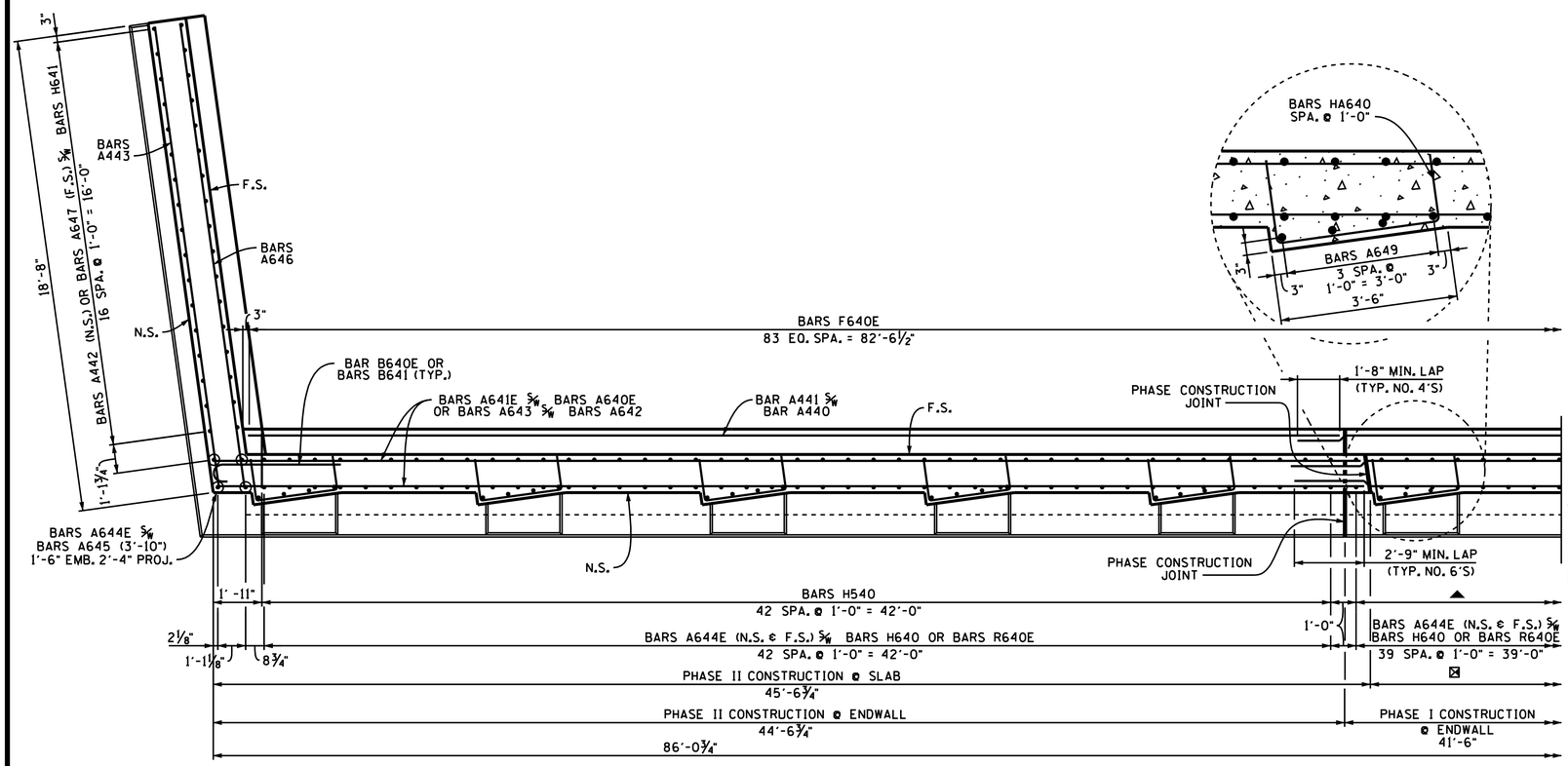

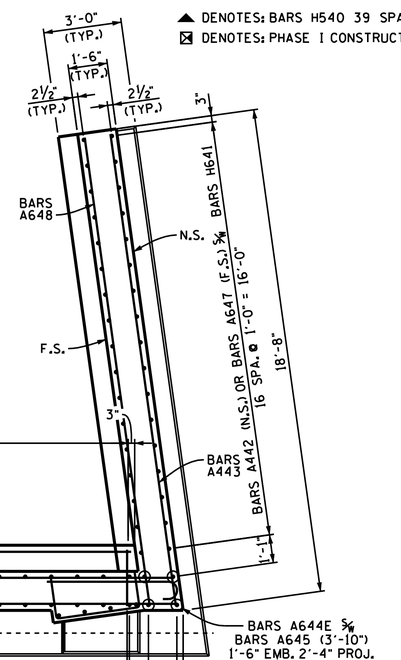

▲ DENOTES: BARS H540 39 SPA. @ 1'-0" = 39'-0"
⊠ DENOTES: PHASE I CONSTRUCTION @ SLAB = 40'-6"

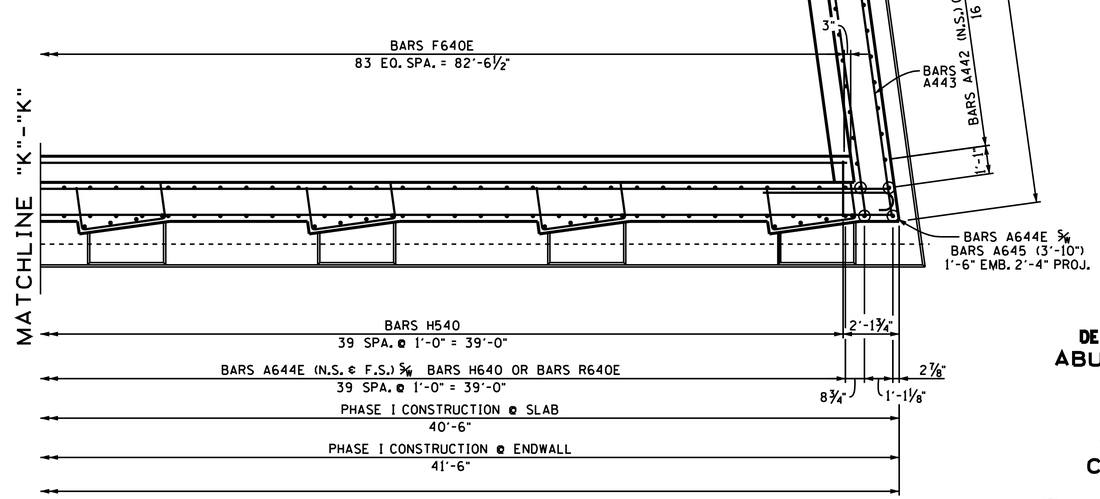

SECTION "R"-"R"

STATE OF TENNESSEE
DEPARTMENT OF TRANSPORTATION
ABUTMENT NO. 2 DETAILS
STATE ROUTE 298
OVER
INTERSTATE 40
STATION 117+69.10
CUMBERLAND COUNTY
2013

CORRECT Wayne G. Sayre
ENGINEER OF STRUCTURES

DESIGNED BY	J.B. SHOULDERS	DATE	02-12
DRAWN BY	RODNEY CHANDLER	DATE	06-12
SUPERVISED BY	T.E.H. / J.W.F.	DATE	06-12
CHECKED BY	J.B. SHOULDERS	DATE	01-13

U-045-119

AB1058F.DGN

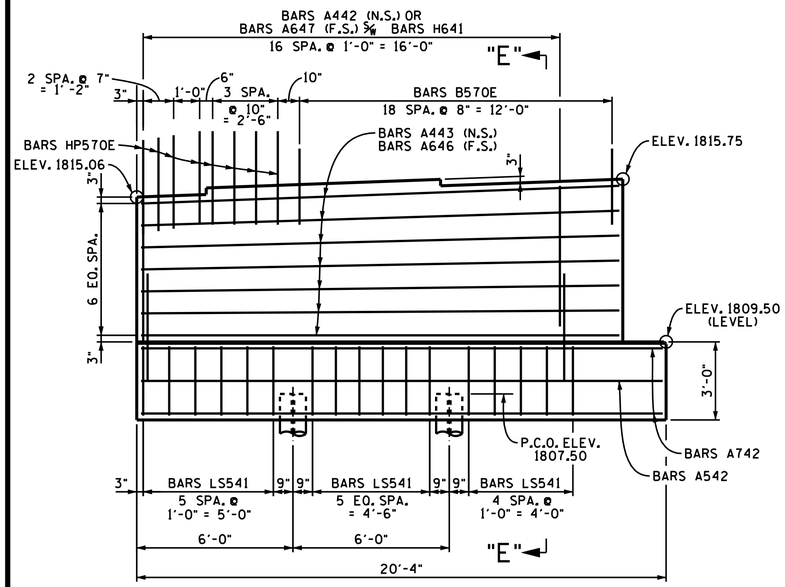

ELEVATION "A"-"A"

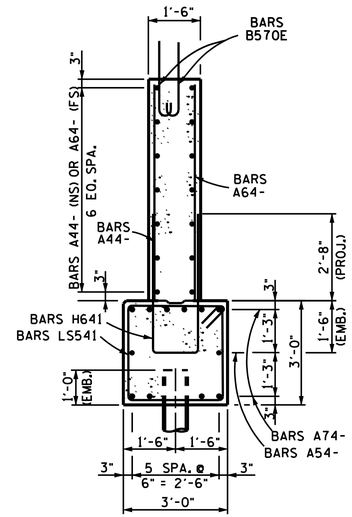

SECTION "E"-"E"

ABUTMENT NO. 1

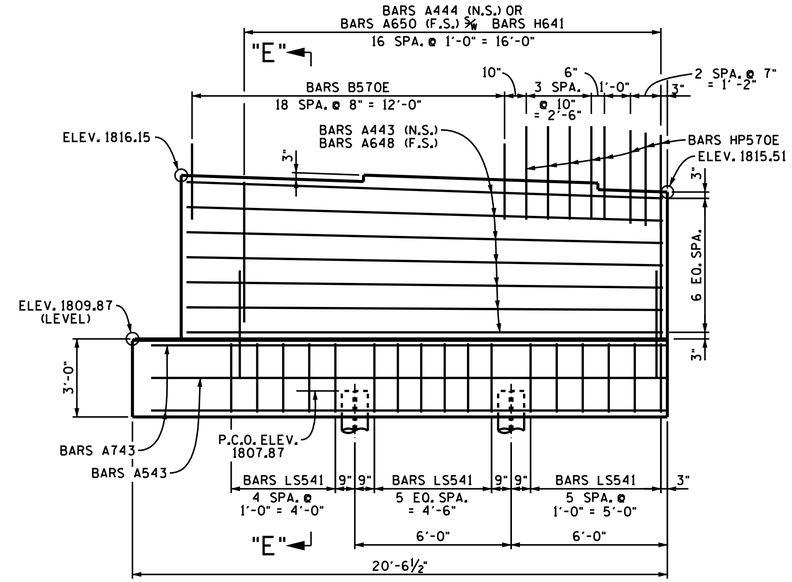

ELEVATION "B"-"B"

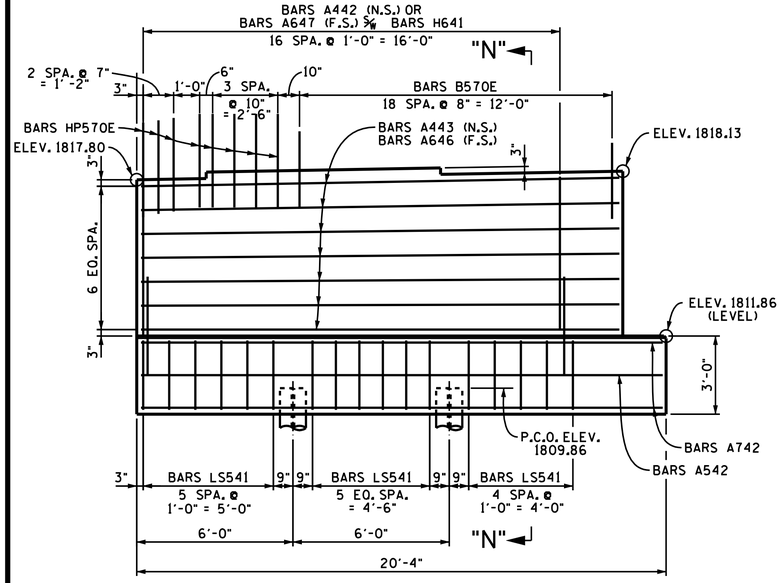

ELEVATION "L"-"L"

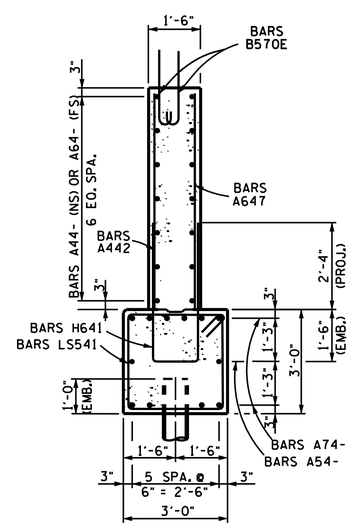

SECTION "N"-"N"

ABUTMENT NO. 2

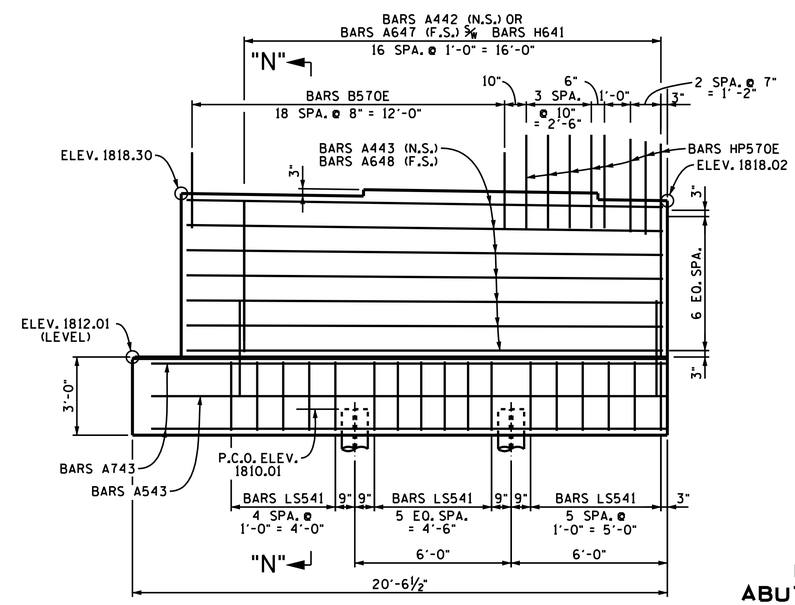

ELEVATION "M"-"M"

CONST. NO.	18011-3225-94	
PROJECT NO.	YEAR	SHEET NO.
BR-STP-298(10)	2013	

REVISIONS

NO.	DATE	BY	BRIEF DESCRIPTION

N.S. DENOTES: NEAR SIDE
F.S. DENOTES: FAR SIDE
P.C.O. DENOTES: PILE CUT-OFF

STATE OF TENNESSEE
DEPARTMENT OF TRANSPORTATION

ABUTMENT NO. 1 & 2 DETAILS
STATE ROUTE 298
OVER
INTERSTATE 40
STATION 117+69.10
CUMBERLAND COUNTY
2013

CORRECT _____
ENGINEER OF STRUCTURES

DESIGNED BY J.B. SHOULDERS DATE 02-12
DRAWN BY RODNEY CHANDLER DATE 06-12
SUPERVISED BY T.E.H. / J.W.F. DATE 06-12
CHECKED BY J.B. SHOULDERS DATE 01-13

U-045-120

BP1058F.DGN

CONST. 18011-3225-94

PROJECT NO.	YEAR	SHEET NO.
BR-STP-298(10)	2013	

REVISIONS

NO.	DATE	BY	BRIEF DESCRIPTION

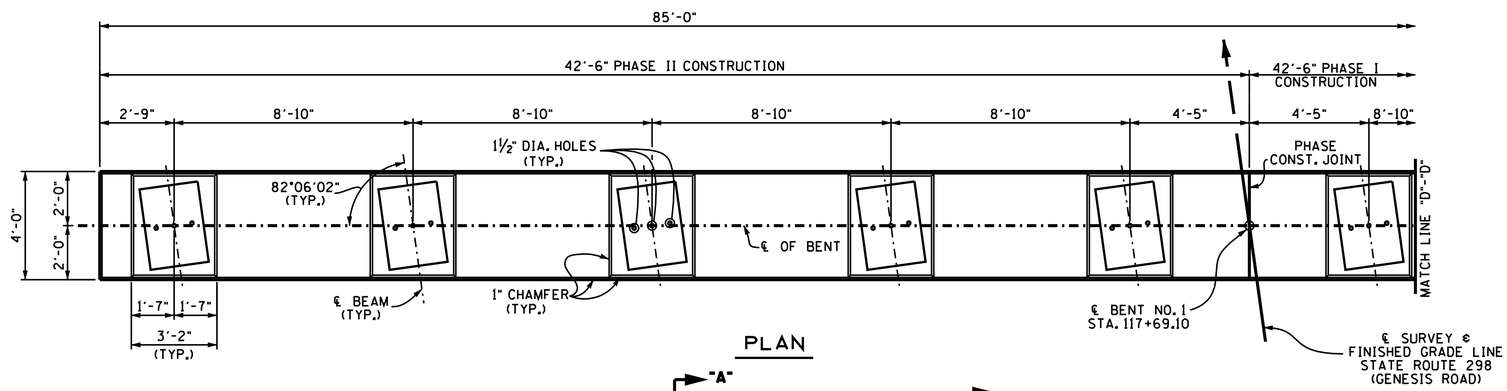

PLAN

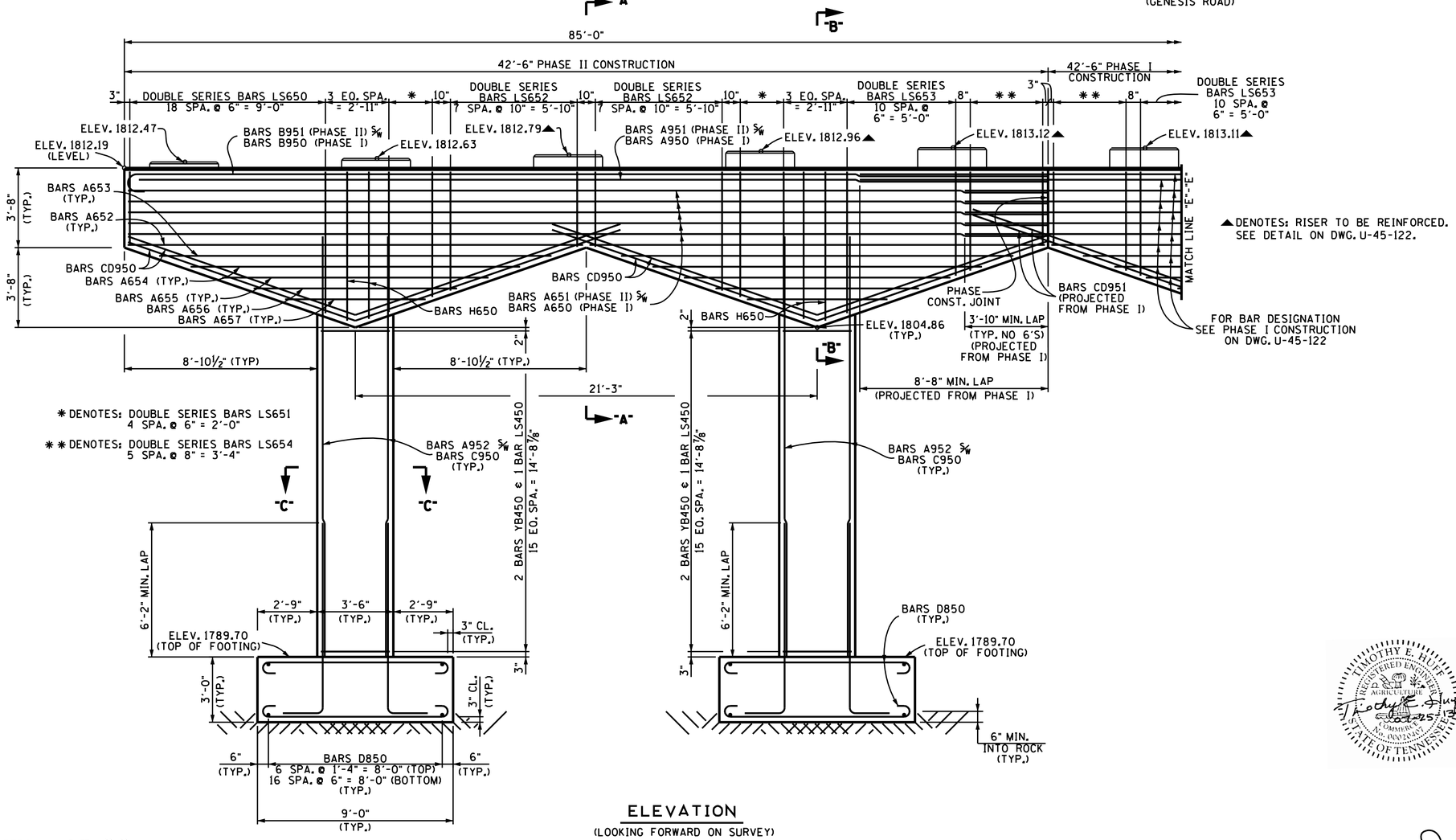

ELEVATION

(LOOKING FORWARD ON SURVEY)

NOTE: WHEN POURING CAP BEAM, PROVISIONS SHALL BE MADE FOR SETTING ANCHOR BOLTS. SEE STANDARD DRAWING STD-6-1. BOLT PROJECTION 11".

NOTE: RISER BLOCKS TO BE POURED MONOLITHICALLY WITH CAP BEAM.

NOTE: ELASTOMERIC PADS SHALL BE IN PLACE A MINIMUM OF ONE DAY BEFORE BEING DISTURBED BY SETTING BEAMS ON CONCRETE. PLACE RUBBER BONDING CEMENT IN SUCH A WAY THAT VISIBLE CONCRETE SURFACES WILL NOT BE STAINED.

COLUMN STEEL TO EXTEND 3'-8" INTO CAP.

NOTE: FOR SECTION "A"-"A", "B"-"B" AND "C"-"C", SEE DWG NO. U-45-123.

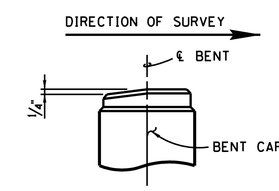

RISER BLOCK SLOPE DETAIL

NOTE: RISER BLOCK BEARING SURFACE TO CONFORM TO BOTTOM OF BEAM GRADE.

ESTIMATED QUANTITIES	
CLASS "A" CONCRETE (BRIDGES) C.Y.	REINFORCING STEEL (BRIDGES) LB.
136	35,631

STATE OF TENNESSEE
DEPARTMENT OF TRANSPORTATION

BENT NO. 1
STATE ROUTE 298
OVER
INTERSTATE 40
STATION 117+69.10
CUMBERLAND COUNTY
2013

CORRECT _____ ENGINEER OF STRUCTURES

DESIGNED BY	J.B. SHOULDERS	DATE	11-11
DRAWN BY	CHRIS STAPLER	DATE	06-12
SUPERVISED BY	T.E.H./J.W.F.	DATE	06-12
CHECKED BY	J.B. SHOULDERS	DATE	01-13

U-45-121

BP1058F.DGN

CONST.	18011-3225-94	
PROJECT NO.	YEAR	SHEET NO.
BR-STP-298(10)	2013	

REVISIONS

NO.	DATE	BY	BRIEF DESCRIPTION

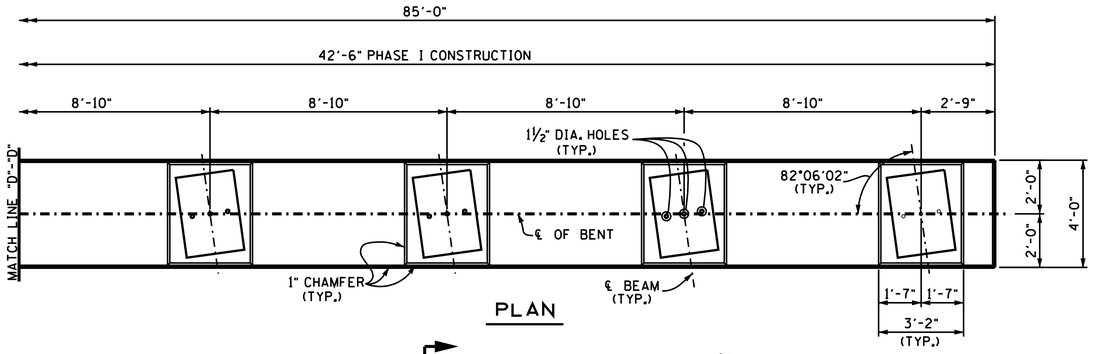

PLAN

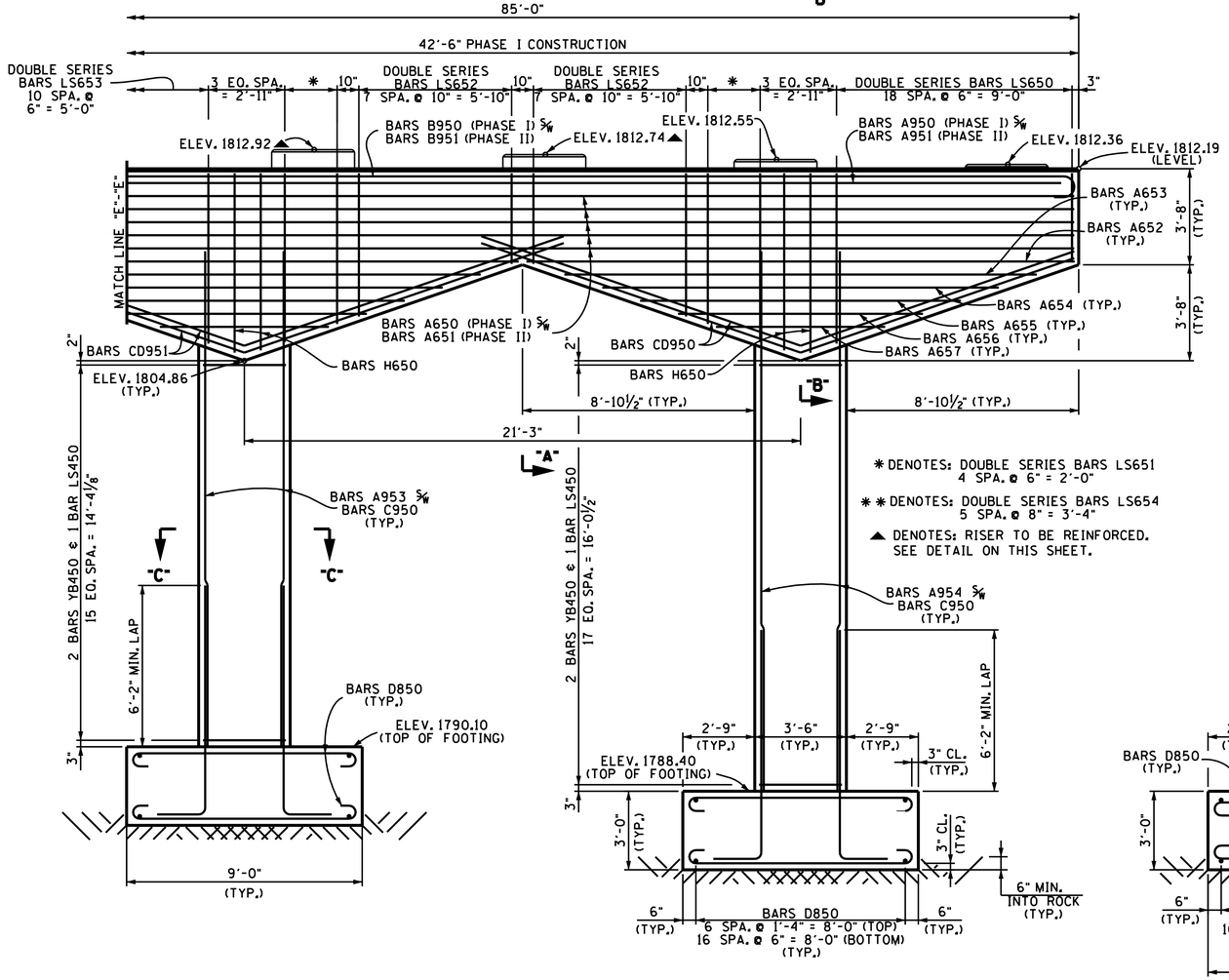

* DENOTES: DOUBLE SERIES BARS LS651 4 SPA. @ 6" = 2'-0"

** DENOTES: DOUBLE SERIES BARS LS654 5 SPA. @ 8" = 3'-4"

▲ DENOTES: RISER TO BE REINFORCED. SEE DETAIL ON THIS SHEET.

ELEVATION

(LOOKING FORWARD ON SURVEY)

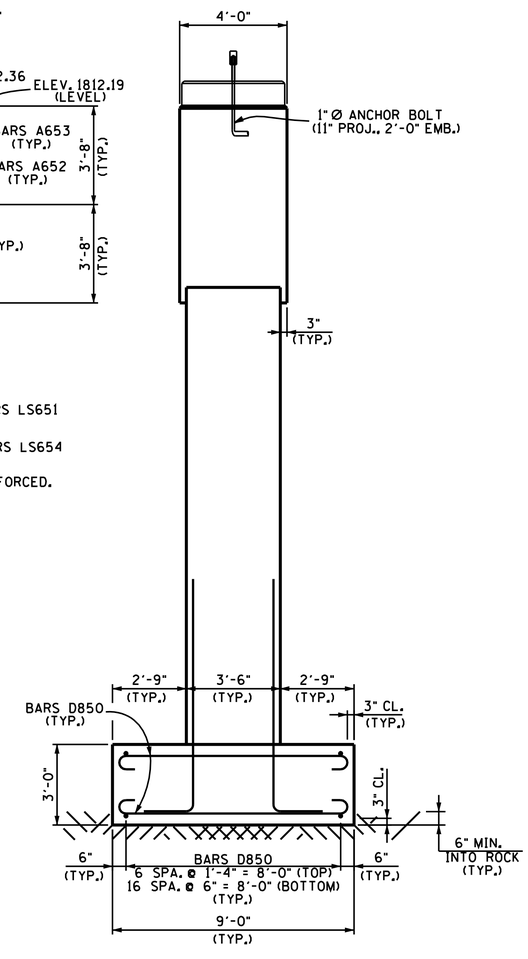

END ELEVATION

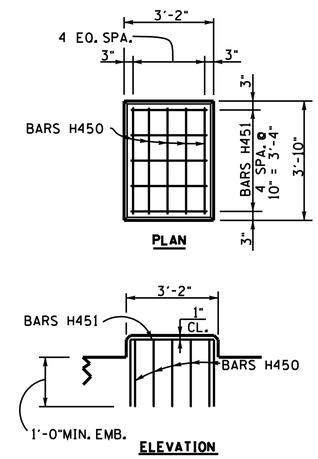

RISER BLOCK REINFORCING DETAIL

STATE OF TENNESSEE
DEPARTMENT OF TRANSPORTATION

BENT NO. 1 DETAILS
STATE ROUTE 298
OVER
INTERSTATE 40
STATION 117+69.10
CUMBERLAND COUNTY
2013

CORRECT Wayne J. Sieger
ENGINEER OF STRUCTURES

DESIGNED BY	J.B. SHOULDERS	DATE	11-11
DRAWN BY	CHRIS STAPLER	DATE	06-12
SUPERVISED BY	T.E.H./J.W.F.	DATE	06-12
CHECKED BY	J.B. SHOULDERS	DATE	01-13

U-45-122

BP105BF.DGN

CONST.	18011-3225-94	
PROJECT NO.	YEAR	SHEET NO.
BR-STP-298(10)	2013	

REVISIONS

NO.	DATE	BY	BRIEF DESCRIPTION

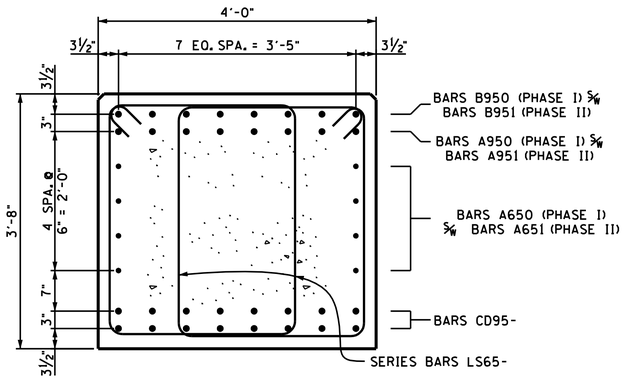

SECTION "A"-"A"

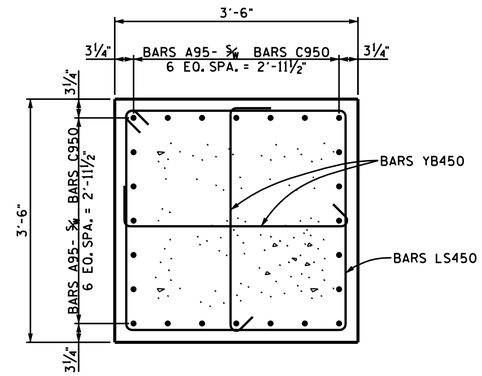

SECTION "C"-"C"

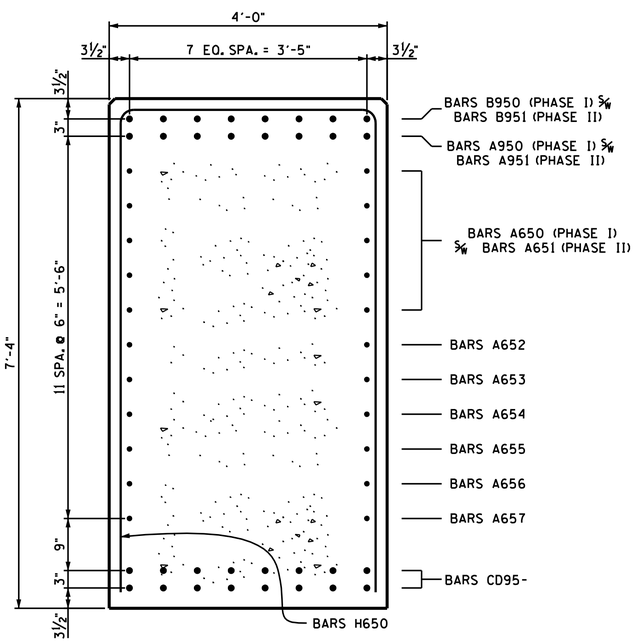

SECTION "B"-"B"

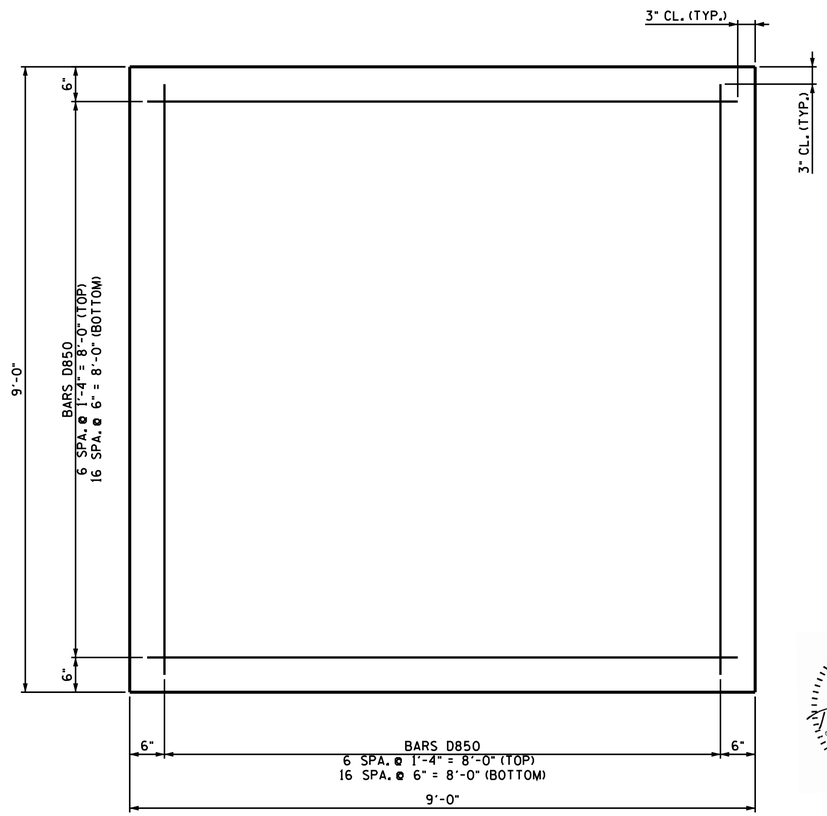

PLAN OF FOOTING

(TYP. ALL FOOTINGS)

STATE OF TENNESSEE
DEPARTMENT OF TRANSPORTATION

BENT NO. 1 DETAILS
STATE ROUTE 298
OVER
INTERSTATE 40
STATION 117+69.10
CUMBERLAND COUNTY
2013

CORRECT _____ ENGINEER OF STRUCTURES

DESIGNED BY	J.B. SHOULDERS	DATE	11-11
DRAWN BY	CHRIS STAPLER	DATE	06-12
SUPERVISED BY	T.E.H./J.W.F.	DATE	06-12
CHECKED BY	J.B. SHOULDERS	DATE	01-13

U-45-123

FF1058F.DGN

CONST. NO. 18011-3225-94

PROJECT NO.	YEAR	SHEET NO.
BR-STP-298(10)	2013	

REVISIONS

NO.	DATE	BY	BRIEF DESCRIPTION

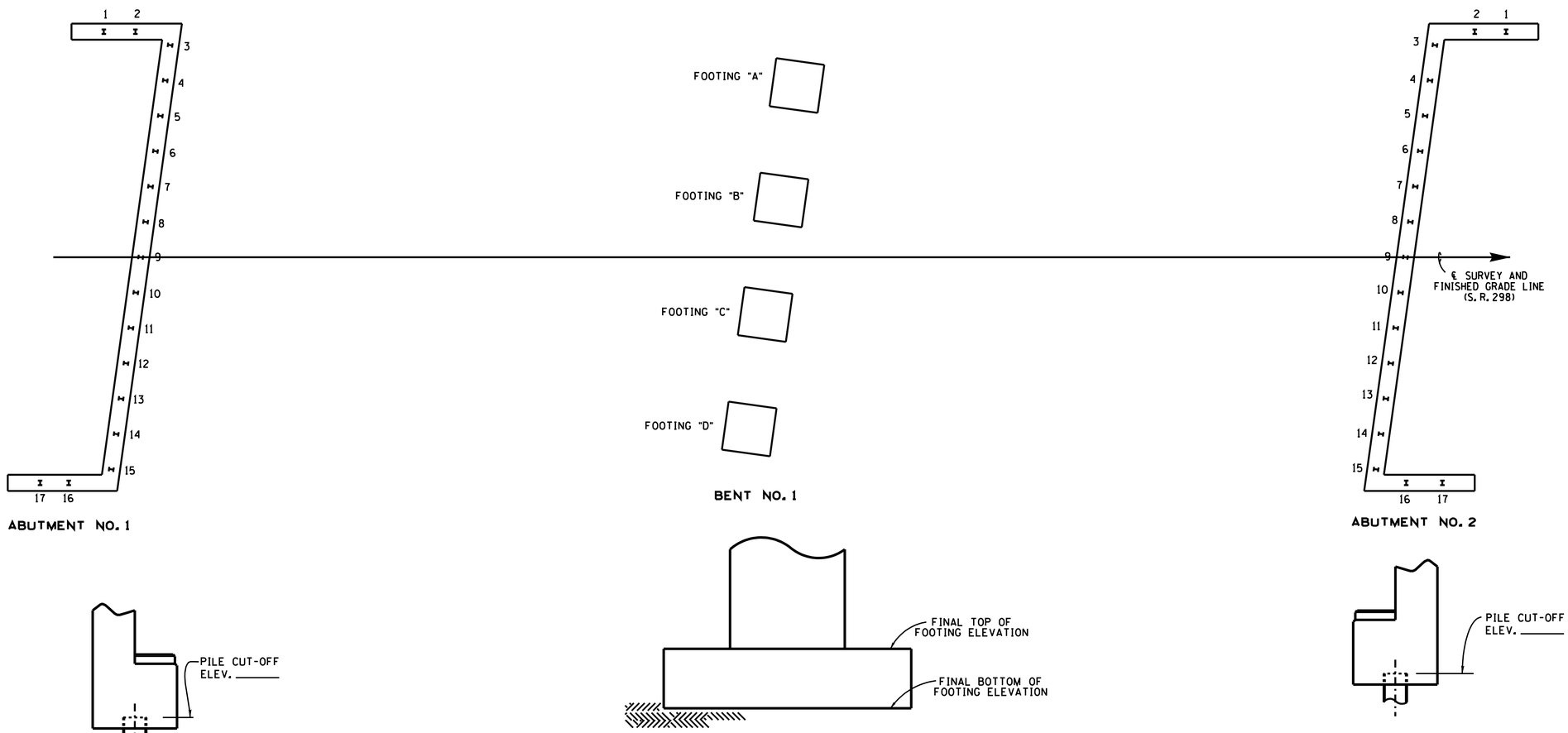

ABUTMENT NO. 1

BENT NO. 1

ABUTMENT NO. 2

	FINAL TOP OF FOOTING ELEVATION	FINAL BOTTOM OF FOOTING ELEVATION
FOOTING "A"		
FOOTING "B"		
FOOTING "C"		
FOOTING "D"		

TABLE SHOWING PILE NUMBERS, PILE CUT-OFF ELEVATIONS AND LENGTHS

		1	2	3	4	5	6	7	8	9	10	11	12	13	14	15	16	17
ABUTMENT NO. 1	PILE CUT-OFF ELEV.																	
	PILE TIP ELEV.																	
	IN PLACE PILE LENGTH																	
ABUTMENT NO. 2	PILE CUT-OFF ELEV.																	
	PILE TIP ELEV.																	
	IN PLACE PILE LENGTH																	

NOTE TO CONTRACTOR AND CONSTRUCTION OFFICE:
THE BLANKS ON THIS SHEET ARE TO BE FILLED IN BY THE CONSTRUCTION OFFICE AND/OR FIELD ENGINEER GIVING AS BUILT CONDITIONS. AFTER COMPLETION, IT IS TO BE SENT TO THE DIVISION OF STRUCTURES TO BECOME PART OF FINAL BRIDGE DOCUMENTS.

STATE OF TENNESSEE
DEPARTMENT OF TRANSPORTATION
FINAL FOUNDATION DATA
STATE ROUTE 298
OVER
INTERSTATE 40
STATION 117+69.10
LOG MILE 2.23
CUMBERLAND COUNTY
2013

CORRECT Wayne G. Sieger
ENGINEER OF STRUCTURES

U-45-124

DESIGNED BY J. B. SHOULDERS DATE 11-11
DRAWN BY G. W. KORNIKOSKI DATE 06-12
SUPERVISED BY T.E.H./J.W.F. DATE 06-12
CHECKED BY J. B. SHOULDERS DATE 01-13

BS1058F.DGN

BILL OF STEEL

SUPERSTRUCTURE - EPOXY

BAR	LOCATION	SIZE	NO. REQ'D	BENDING DIMENSIONS A	B	C	D	LENGTH
A500E	SLAB	5	784					30'-0"
A501E	SLAB	5	98					15'-0"
A502E	SLAB	5	626					41'-5"
A503E	SLAB	5	626					46'-6"
A504E	SLAB	5	348					39'-7"
A900E	SLAB	9	261					34'-4"
A901E	SLAB	9	83					48'-0"
B570E	SLAB, PARAPET	5	1428	2'-1"				2'-8"

SUPERSTRUCTURE - REGULAR

BAR	LOCATION	SIZE	NO. REQ'D	BENDING DIMENSIONS A	B	C	D	LENGTH
A505	DIAPHRAGM	5	12					39'-5"
A506	DIAPHRAGM	5	12					44'-8"
LS400	DIAPHRAGM	4	20	1'-2"	1'-2"			5'-5"
LS401	DIAPHRAGM	4	63	1'-2"	5'-2"			13'-5"

ABUTMENT NO.1 - EPOXY

BAR	LOCATION	SIZE	NO. REQ'D	BENDING DIMENSIONS A	B	C	D	LENGTH
A640E	ENDWALL	6	2					43'-2"
A641E	ENDWALL	6	2					45'-5"
A644E	ENDWALL	6	174					6'-1"
B570E	WINGWALLS, PARAPET	5	76	2'-1"				2'-8"
B640E	ENDWALL	6	2	5'-0"				5'-8"
F640E	ENDWALL/PABE	6	84	1'-1"	1'-3"	1'-1"	1'-3"	3'-11"
HP570E	WINGWALLS	5	16	4"	3'-10"	1'-0¼"		7'-11"
R640E	ENDWALL/SLAB	6	83	3'-3"	2'-11"			6'-2"

ABUTMENT NO.1 - REGULAR

BAR	LOCATION	SIZE	NO. REQ'D	BENDING DIMENSIONS A	B	C	D	LENGTH
A440	ROADWAY BRACKET	4	1					41'-9"
A441	ROADWAY BRACKET	4	1					42'-7"
A442	WINGWALL	4	17					5'-5"
A443	WINGWALL	4	14					18'-4"
A444	WINGWALL	4	17					5'-6"
A540	ABUTMENT BEAM	5	2					44'-1"
A541	ABUTMENT BEAM	5	2					45'-5"
A542	WING BEAM	5	2					20'-0"
A543	WING BEAM	5	2					19'-10"
A642	ENDWALL	6	12					44'-3"
A643	ENDWALL	6	12					44'-2"
A645	ENDWALL/WINGWALL	6	8					3'-10"
A646	WINGWALLS	6	7					18'-6"
A647	WINGWALLS	6	17					5'-5"
A648	WINGWALLS	6	6					18'-2"
A649	BEAMSTOP	6	40					5'-3"
A650	WINGWALLS	6	17					5'-6"
A740	ABUTMENT BEAM	7	13					45'-8"
A741	ABUTMENT BEAM	7	13					45'-5"
A742	WING BEAM	7	10					20'-0"
A743	WING BEAM	7	10					19'-10"
B641	ENDWALL	6	12	5'-0"				5'-8"

ABUTMENT NO.1 - REGULAR (CONTINUE)

BAR	LOCATION	SIZE	NO. REQ'D	BENDING DIMENSIONS A	B	C	D	LENGTH
H540	ENDWALL	5	83	2'-2"	6"			3'-2"
H640	ABUTMENT BEAM	6	83	1'-2"	3'-7"			8'-4"
H641	WING BEAM	6	34	1'-2"	4'-2"			9'-6"
HA640	BEAM STOP/ENDWALL	6	60	3'-2"	1'-7"	1'-2"		5'-11"
LS540	ABUTMENT BEAM	5	92	2'-11	2'-8"			12'-1"
LS541	WING BEAM	5	34	2'-8"	2'-8"			11'-7"

BENT NO.1 - REGULAR

BAR	LOCATION	SIZE	NO. REQ'D	BENDING DIMENSIONS A	B	C	D	LENGTH
A650	CAP	6	10					46'-2"
A651	CAP	6	10					42'-4"
A652	CAP	6	8					20'-11"
A653	CAP	6	8					18'-1"
A654	CAP	6	8					15'-2"
A655	CAP	6	8					12'-3"
A656	CAP	6	8					9'-4"
A657	CAP	6	8					6'-6"
A950	CAP	9	8					51'-0"
A951	CAP	9	8					42'-4"
A952	COLUMN	9	48					19'-4"
A953	COLUMN	9	24					19'-0"
A954	COLUMN	9	24					20'-8"
B950	CAP	9	8	51'-0"				52'-3"
B951	CAP	9	8	42'-4"				43'-7"
C950	COLUMN/FOOTING	9	96	8'-9"				10'-4"
CD950	CAP	9	48	11'-0¾"	13'-0⅝"	10'-3¼"		24'-1"
CD951	CAP	9	16	14'-10⅞"	13'-0⅝"	10'-3¼"		27'-11"
D850	FOOTINGS	8	192	8'-6"				10'-4"
H650	CAP	6	8	3'-8"	6'-10⅝"			17'-5"
LS450	COLUMN	4	66	3'-2"	3'-2"			13'-5"
SERIES LS650	CAP	6	4	2'-8"	**			315'-3"
				"B" LENGTH VARIES FROM 3'-4⅞" TO 6'-6¼" IN INCS OF 2⅛" (19 BARS)				
SERIES LS651	CAP	6	8	2'-8"	**			94'-6"
				"B" LENGTH VARIES FROM 5'-9¼" TO 6'-5½" IN INCS OF 2⅛" (5 BARS)				
SERIES LS652	CAP	6	8	2'-8"	**			124'-11"
				"B" LENGTH VARIES FROM 3'-5⅝" TO 5'-5¾" IN INCS OF 3½" (8 BARS)				

NOTE: BAR NUMBERS ARE REPEATED ON BILL OF STEEL FOR EACH ABUTMENT, THEREFORE IT WILL BE NECESSARY FOR THE SUPPLIER TO SHIP THE BARS TO THE JOB SITE WITH THE SUBSTRUCTURE DESIGNATION INCLUDED AS PART OF THE LABEL.

CONST. NO. 18011-3225-94

PROJECT NO.	YEAR	SHEET NO.
BR-STP-298(10)	2013	

REVISIONS

NO.	DATE	BY	BRIEF DESCRIPTION

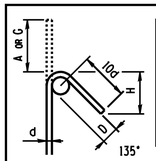

BAR SIZE	D (IN.)	135° HOOK HOOK A OR G	H APPROX.
#4	2	6½	4½
#5	2½	8	5½
#6	4½	10¼	6½
#7	5¼	1-0¼	7¼
#8	6	1-2¼	9

135° SEISMIC STIRRUP/TIE HOOK DIMENSIONS (ALL GRADES)

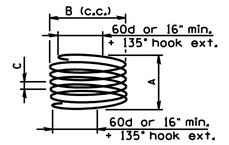

BARS M

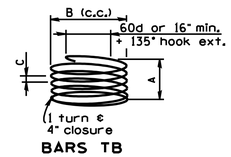

BARS TB

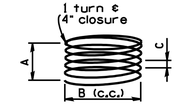

BARS CF

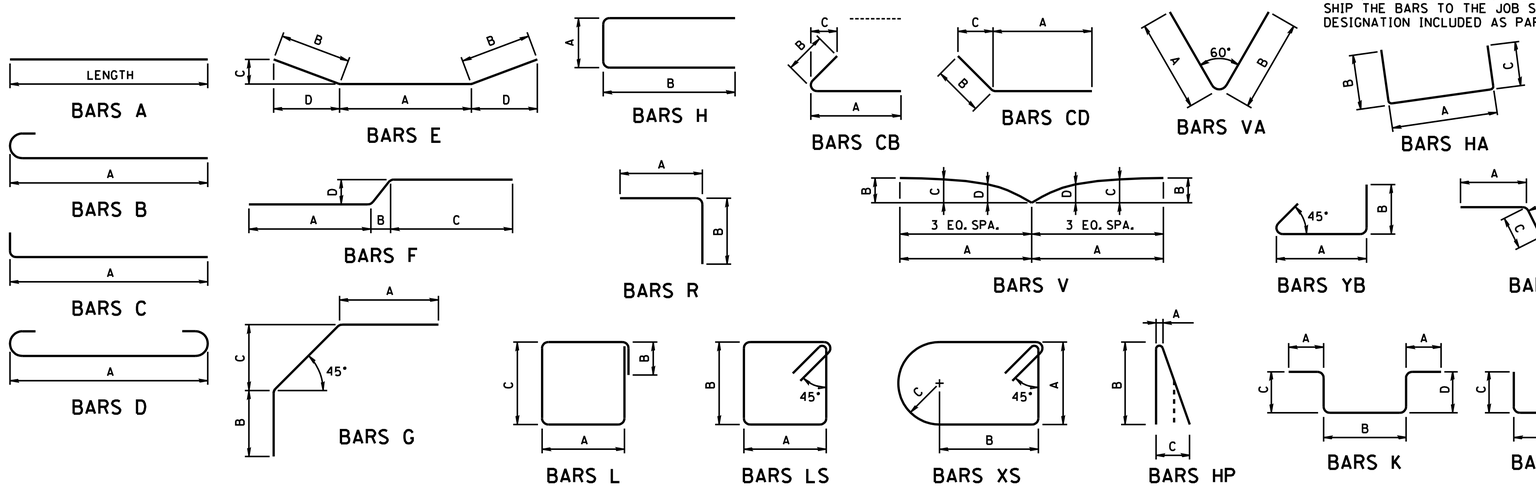

REINFORCING STEEL CODE

TYPE	SIZE	SERIES
A	16	06

NOTE: DIMENSIONS SHOWN ON THIS SHEET ARE OUTSIDE TO OUTSIDE OF BAR. STANDARD C.R.S.I. HOOK DETAILS SHALL APPLY, EXCEPT AS NOTED.
NOTE: THE SUFFIX E FOR BARS SO MARKED DENOTES EXPOXY COATED REINFORCEMENT.

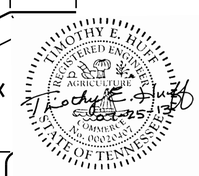

STATE OF TENNESSEE
DEPARTMENT OF TRANSPORTATION
BILL OF STEEL
STATE ROUTE 298
OVER
INTERSTATE 40
STATION 117+69.10
CUMBERLAND COUNTY
2013

DESIGNED BY J. B. SHOULDERS DATE 02-12
DRAWN BY RODNEY CHANDLER DATE 02-13
SUPERVISED BY T.E.H. / J.W.F. DATE 06-12
CHECKED BY J. B. SHOULDERS DATE 01-13

CORRECT Wayne J. Sager
ENGINEER OF STRUCTURES

U-045-125

BS1058F.DGN

BILL OF STEEL

BENT NO.1 - REGULAR (CONTINUED)

BAR	LOCATION	SIZE	NO. REQ'D	BENDING DIMENSIONS A	B	C	D	LENGTH
SERIES								
LS653	CAP	6	4	2'-8"	*			197'-10"
				"B" LENGTH VARIES FROM 4'-9⅛" TO 6'-6¼" IN INCS OF 2⅛" (11 BARS)				
SERIES								
LS654	CAP	6	4	2'-8"	*			87'-10"
				"B" LENGTH VARIES FROM 3'-4⅛" TO 4'-6⅜" IN INCS OF 2⅜" (6 BARS)				
YB450	COLUMNS	4	132	3'-2"	4½"			3'-11"
H450	RISER	4	30	2'-10"	1'-9"			6'-4"
H451	RISER	4	30	3'-6"	1'-9"			7'-0"

ABUTMENT NO.2 - EPOXY

BAR	LOCATION	SIZE	NO. REQ'D	BENDING DIMENSIONS A	B	C	D	LENGTH
A640E	ENDWALL	6	2					43'-1"
A641E	ENDWALL	6	2					45'-4"
A644E	ENDWALL	6	174					6'-2"
B570E	WINGWALLS, PARAPET	5	76	2'-3"				2'-8"
B640E	ENDWALL	6	2	5'-0"				5'-8"
F640E	ENDWALL/PABE	6	84	1'-1"	1'-3"	1'-1"	1'-3"	3'-11"
HP570E	WINGWALLS	5	16	4"	3'-10"	1'-0¼"		7'-11"
R640E	ENDWALL/SLAB	6	83	3'-3"	2'-11"			6'-2"

ABUTMENT NO.2 - REGULAR

BAR	LOCATION	SIZE	NO. REQ'D	BENDING DIMENSIONS A	B	C	D	LENGTH
A440	ROADWAY BRACKET	4	1					41'-9"
A441	ROADWAY BRACKET	4	1					42'-7"
A442	WINGWALL	4	34					5'-10"
A443	WINGWALL	4	7					18'-4"
A444	WINGWALL	4	7					18'-4"
A540	ABUTMENT BEAM	5	2					44'-5"
A541	ABUTMENT BEAM	5	2					45'-0"
A542	WING BEAM	5	2					20'-0"
A543	WING BEAM	5	2					19'-10"
A642	ENDWALL	6	12					44'-1"
A643	ENDWALL	6	12					44'-5"
A645	ENDWALL/WINGWALL	6	8					3'-10"
A646	WINGWALLS	6	7					18'-6"
A647	WINGWALLS	6	34					5'-10"
A648	WINGWALLS	6	7					18'-2"
A649	BEAMSTOP	6	40					5'-3"
A740	ABUTMENT BEAM	7	13					46'-1"
A741	ABUTMENT BEAM	7	13					45'-0"
A742	WING BEAM	7	10					20'-0"
A743	WING BEAM	7	10					19'-10"
B641	ENDWALL	6	12	5'-0"				5'-8"

ABUTMENT NO.2 - REGULAR (CONTINUE)

BAR	LOCATION	SIZE	NO. REQ'D	BENDING DIMENSIONS A	B	C	D	LENGTH
H540	ENDWALL	5	83	2'-2"	6"			3'-2"
H640	ABUTMENT BEAM	6	83	1'-2"	3'-7"			8'-10"
H641	WING BEAM	6	34	1'-2"	4'-2"			8'-8"
HA640	BEAM STOP/ENDWALL	6	60	3'-2"	1'-7"	1'-2"		5'-11"
LS540	ABUTMENT BEAM	5	92	2'-11	2'-8"			12'-1"
LS541	WING BEAM	5	34	2'-8"	2'-8"			11'-7"

BAR	LOCATION	SIZE	NO. REQ'D	BENDING DIMENSIONS A	B	C	D	LENGTH

NOTE: BAR NUMBERS ARE REPEATED ON BILL OF STEEL FOR EACH ABUTMENT, THEREFORE IT WILL BE NECESSARY FOR THE SUPPLIER TO SHIP THE BARS TO THE JOB SITE WITH THE SUBSTRUCTURE DESIGNATION INCLUDED AS PART OF THE LABEL.

CONST. NO. 18011-3225-94

PROJECT NO.	YEAR	SHEET NO.
BR-STP-298(10)	2013	

REVISIONS

NO.	DATE	BY	BRIEF DESCRIPTION

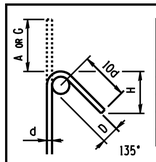

BAR SIZE	D (IN.)	135° HOOK HOOK A OR C	H APPROX.
#4	2	6½	4½
#5	2½	8	5½
#6	4½	10¼	6½
#7	5¼	1'-0¼	7¼
#8	6	1'-2¼	9

135° SEISMIC STIRRUP/TIE HOOK DIMENSIONS (ALL GRADES)

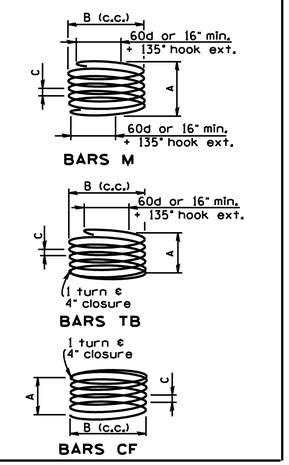

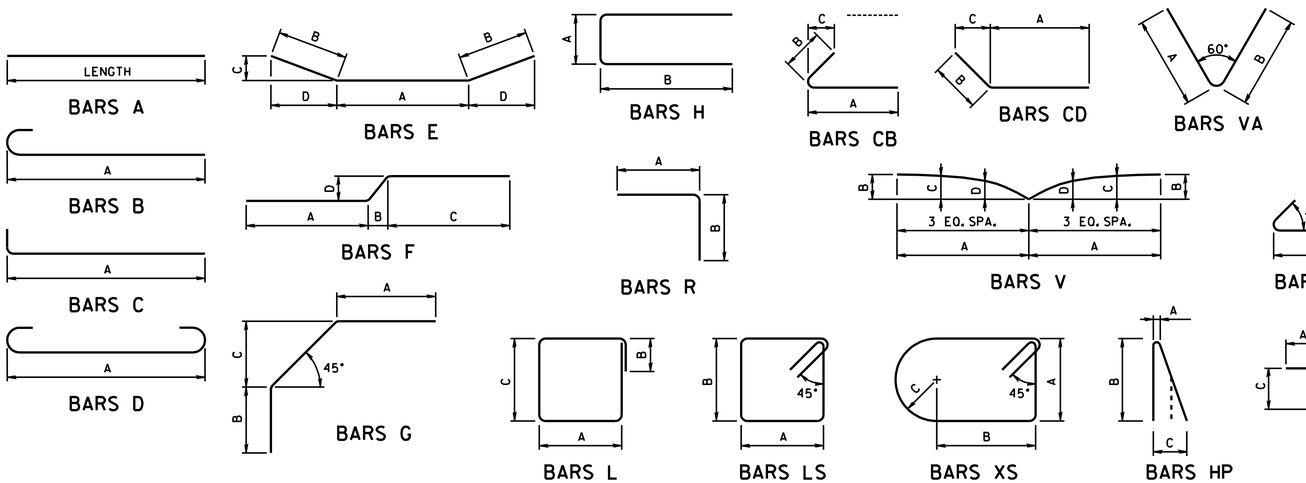

REINFORCING STEEL CODE

TYPE	SIZE	SERIES
A	16	06

NOTE: DIMENSIONS SHOWN ON THIS SHEET ARE OUTSIDE TO OUTSIDE OF BAR. STANDARD C.R.S.I. HOOK DETAILS SHALL APPLY, EXCEPT AS NOTED.
NOTE: THE SUFFIX E FOR BARS SO MARKED DENOTES EXPOXY COATED REINFORCEMENT.

TIMOTHY E. HUFF REGISTERED ENGINEER AGRICULTURE COMMERCE No. 0002-0007 STATE OF TENNESSEE

STATE OF TENNESSEE
DEPARTMENT OF TRANSPORTATION
BILL OF STEEL
STATE ROUTE 298
OVER
INTERSTATE 40
STATION 117+69.10
CUMBERLAND COUNTY
2013

DESIGNED BY J. B. SHOULDERS DATE 02-12
DRAWN BY RODNEY CHANDLER DATE 02-13
SUPERVISED BY T.E.H. / J.W.F. DATE 06-12
CHECKED BY J. B. SHOULDERS DATE 01-13

CORRECT Wayne F. Fager
ENGINEER OF STRUCTURES

U-045-126