CONST. NO.	BR-I-40-3(155)	
PROJECT NO.	YEAR	SHEET NO.
11003-3134-94	2014	

REVISIONS

NO.	DATE	BY	BRIEF DESCRIPTION

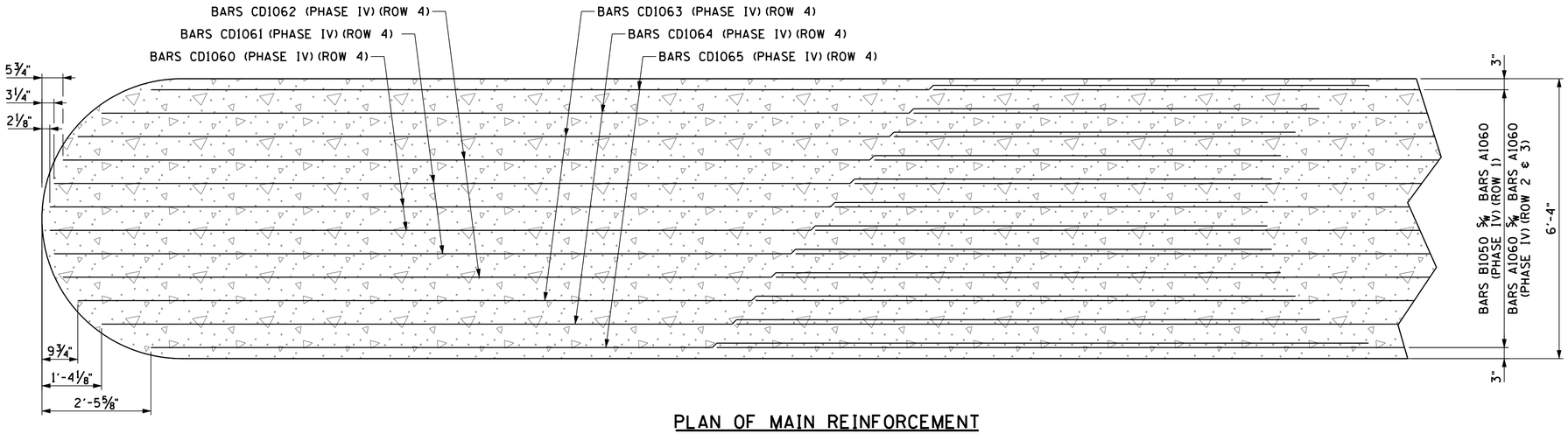

PLAN OF MAIN REINFORCEMENT

(NOT TO SCALE)

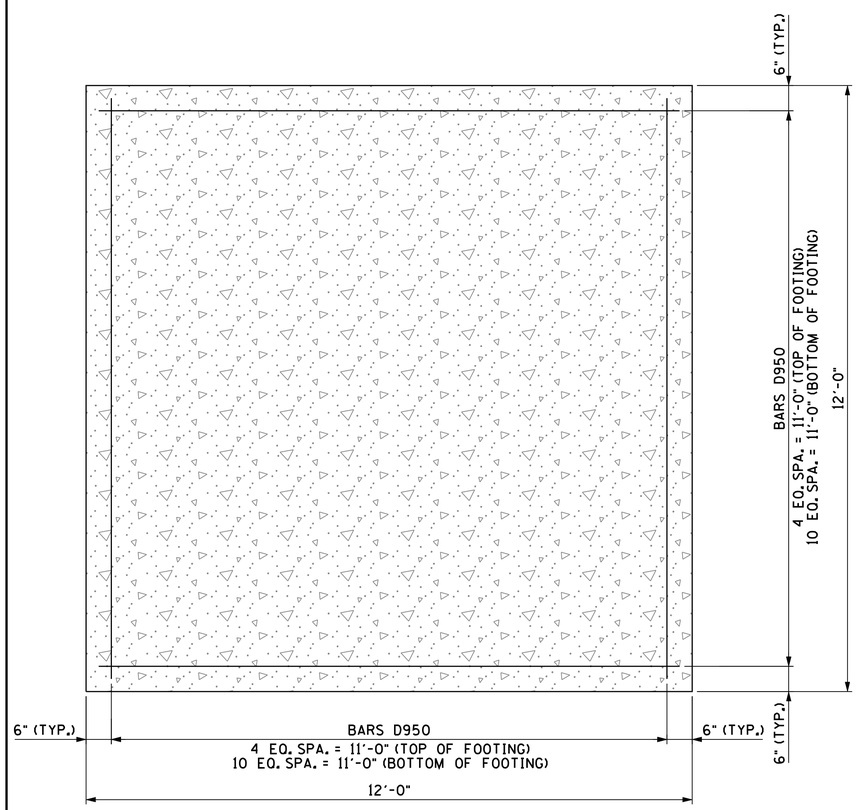

PLAN OF FOOTING

(NOT TO SCALE)

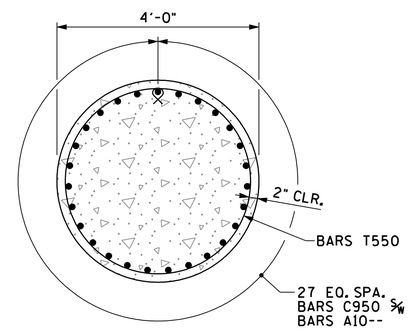

SECTION "B-B"

(NOT TO SCALE)

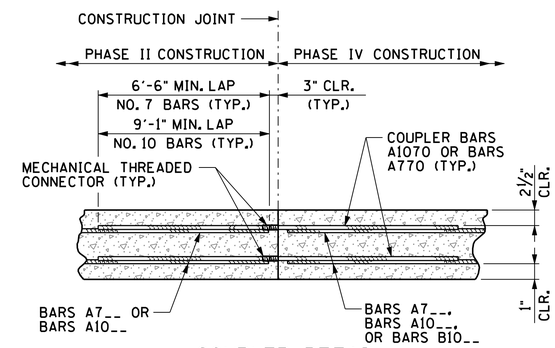

COUPLER DETAIL

(NOT TO SCALE)

NOTE: THE COST OF MECHANICAL THREADED CONNECTORS AND THE COST OF THREADING THE COUPLER BARS SHALL BE INCLUDED IN THE PRICE BID FOR ITEM NO. 604-02.03, EPOXY COATED REINFORCING STEEL, L.B.

NOTE: DETAIL IS TYPICAL FOR CONSTRUCTION JOINT BETWEEN PHASES II AND IV.

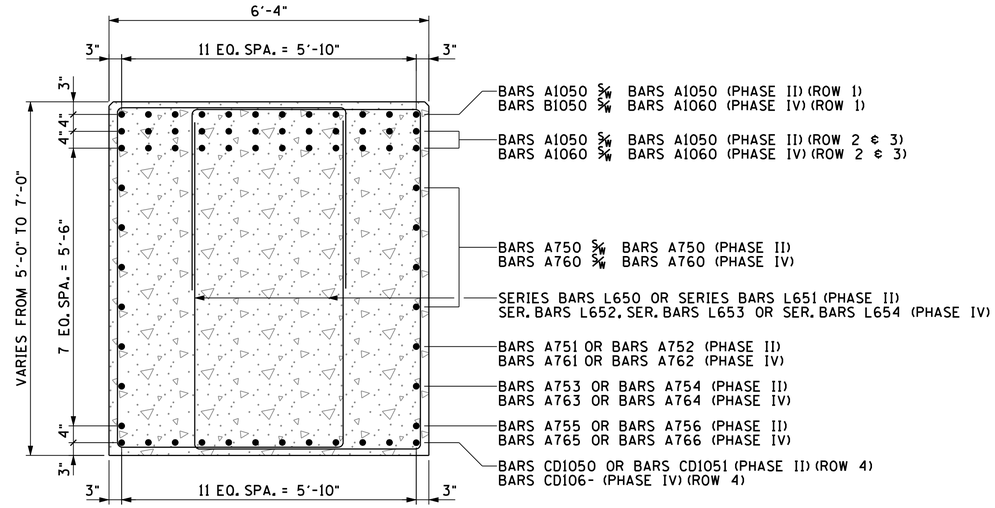

SECTION "A-A"

(NOT TO SCALE)

04/04/2014

STATE OF TENNESSEE
DEPARTMENT OF TRANSPORTATION

BENT NO. 1 DETAILS

BRIDGE NO. 11-10040-05.63 (EB & WB)
INTERSTATE 40 OVER HARPETH RIVER
CHEATHAM COUNTY
2014

DESIGNED BY	D. JAMES/D. THOMPSON	DATE	
DRAWN BY	ANGELA MOORE	DATE	
SUPERVISED BY	D. JAMES/D. THOMPSON	DATE	
CHECKED BY	JAMIE GILLESPIE	DATE	

JAMES + ASSOCIATES INC.

BR-113-53