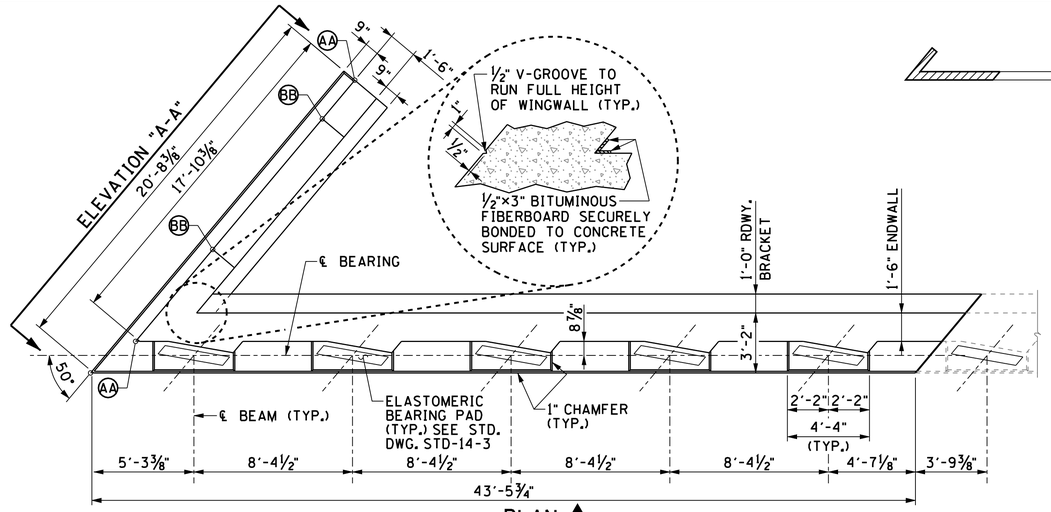

PLAN 2

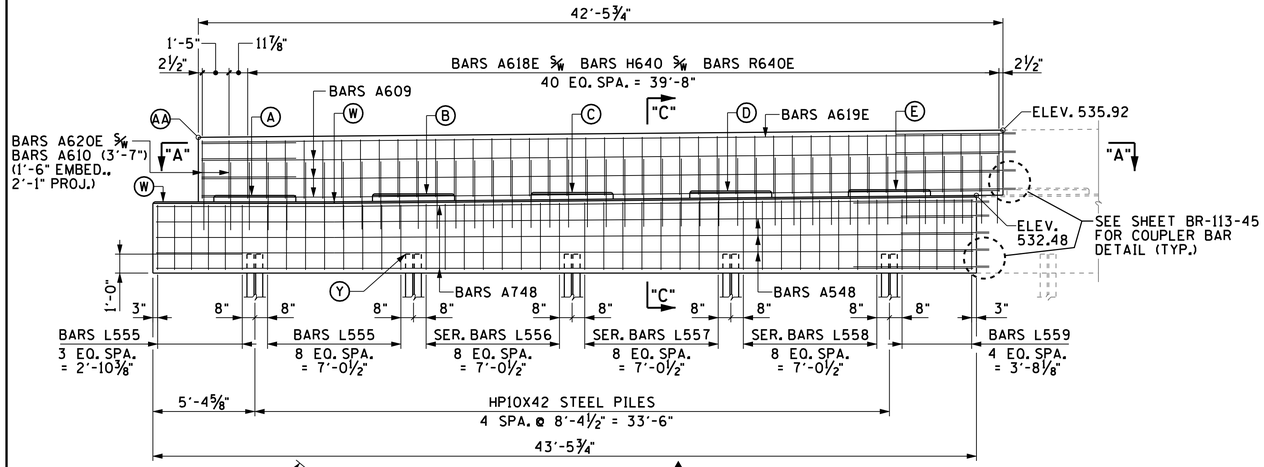

ELEVATION 1
(LOOKING FORWARD ON SURVEY)

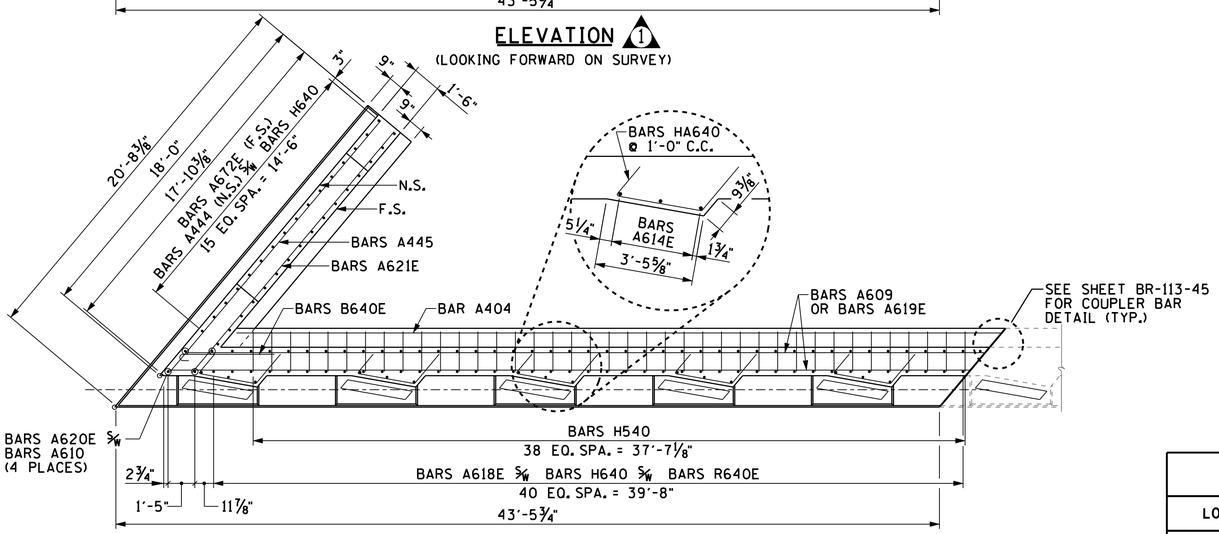

SECTION "A-A"

KEY

NOTE: BEARING PAD SURFACE TO CONFORM TO BOTTOM OF BEAM GRADE.

NOTE: RISER BLOCKS SHALL BE POURED MONOLITHICALLY WITH THE ABUTMENT BEAM.

NOTE: WHEN POURING WINGWALLS, PROVISIONS SHALL BE MADE FOR SETTING REINFORCING STEEL FOR WINGPOSTS AND PARAPETS. FOR DETAILS OF WINGPOSTS AND PARAPET, SEE STD. DWG. NO. STD-1-1SS.

NOTE: NOT LESS THAN HALF OF THE SLAB IN THE END SPAN SHALL BE POURED PRIOR TO, OR CONCURRENTLY WITH, PLACEMENT OF ANY PART OF THE ABUTMENT BACKWALL. AT LEAST THE TOP 12 INCHES OF THE BACKWALL SHALL BE POURED CONCURRENTLY WITH THE END OF SLAB.

NOTE: COST OF BRIDGE RAIL AND POST IS TO BE INCLUDED IN THE UNIT PRICE BID FOR THE BRIDGE RAIL SYSTEM.

NOTE: ELASTOMERIC PADS SHALL BE IN PLACE A MINIMUM OF ONE DAY BEFORE BEING DISTURBED BY SETTING BEAMS. PLACE RUBBER BONDING CEMENT IN SUCH A WAY THAT VISIBLE CONCRETE SURFACES WILL NOT BE STAINED.

NOTE: WINGBEAM PILES SHALL BE DRIVEN TO THE PLANS TIP ELEVATION OR REFUSAL. SEISMIC ATTACHMENT IS NOT REQUIRED FOR WINGBEAM PILES.

NOTE: SEE SHEET BR-113-45 FOR SECTION "C-C" AND "D-D", COUPLER DETAIL AND RISER BLOCK REINFORCING DETAIL.

CONST. NO. BR-I-40-3(155)

PROJECT NO.	YEAR	SHEET NO.
11003-3134-94	2014	

REVISIONS

NO.	DATE	BY	BRIEF DESCRIPTION
1	02-05-13	DT	UPDATED ELEVATIONS
2	04-26-13	DWT	REVISED ELASTOMERIC BEARING PAD
			STD. DWG. FROM STD-14-1 TO STD-14-3,
			REVISED EPOXY COATED REBAR QUANTITY,
			REVISED BAR B570E SPACING
3	11-15-13	DWT	REVISED QUANTITY FOR CLASS "A"
			CONCRETE, EPOXY COATED REINFORCING
			STEEL AND STEEL BAR REINFORCEMENT

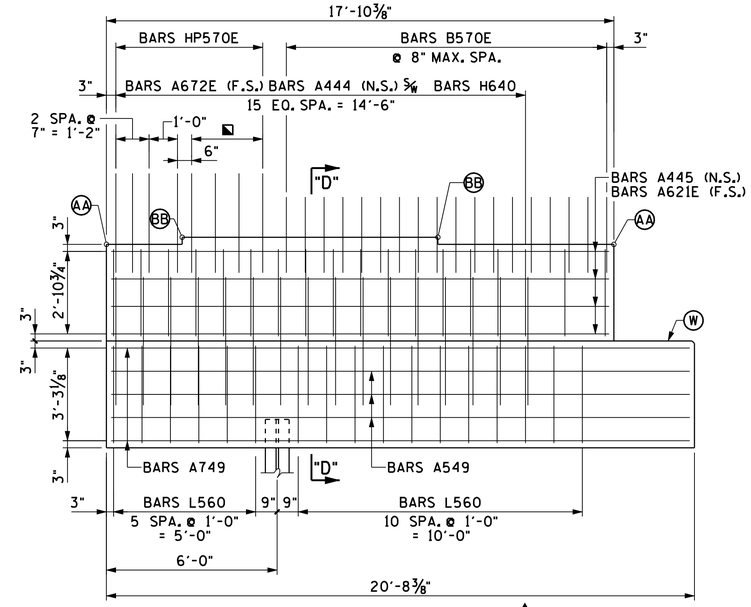

ELEVATION "A-A" 2

◪ DENOTES: BARS HP570E 3 SPA. @ 10" = 2'-6"

ESTIMATED QUANTITIES 2 3

CLASS "A" CONCRETE (BRIDGES) (C.Y.)	EPOXY COATED REINFORCING STEEL (BRIDGES) (LBS.)	STEEL BAR REINFORCEMENT (BRIDGES) (LBS.)
43	1,695	4,060

ELEVATIONS 1

LOCATION	A	B	C	D	E	W	Y	AA	BB
ABUTMENT NO. 2 (PHASE IV)	532.48	532.56	532.63	532.71	532.78	532.14	529.38	535.54	535.79

04/04/2014

STATE OF TENNESSEE
DEPARTMENT OF TRANSPORTATION

ABUTMENT NO. 2
(PHASE IV - WESTBOUND)

BRIDGE NO. 11-10040-05.63 (EB & WB)
INTERSTATE 40 OVER HARPETH RIVER
CHEATHAM COUNTY
2014

DESIGNED BY D. JAMES/D. THOMPSON DATE
DRAWN BY ANGELA MOORE DATE
SUPERVISED BY D. JAMES/D. THOMPSON DATE
CHECKED BY JAMIE GILLESPIE DATE

JAMES & ASSOCIATES, INC.