CONST. NO. BR-I-40-3(155)

PROJECT NO.	YEAR	SHEET NO.
11003-3134-94	2014	

REVISIONS

NO.	DATE	BY	BRIEF DESCRIPTION
2	04-26-13	DWT	REVISED BEAM DETAILS

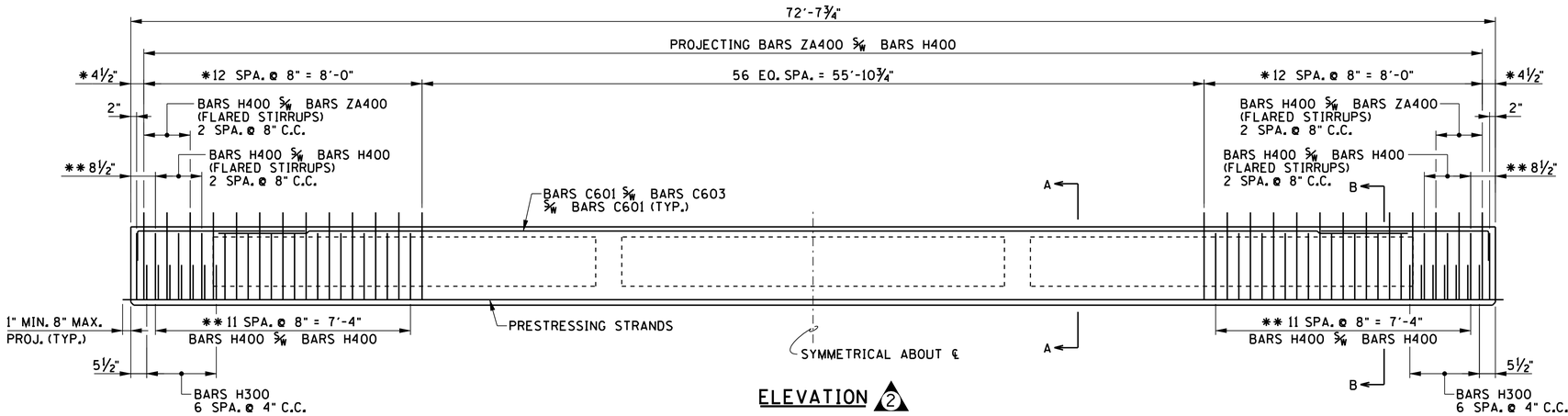

ELEVATION 2

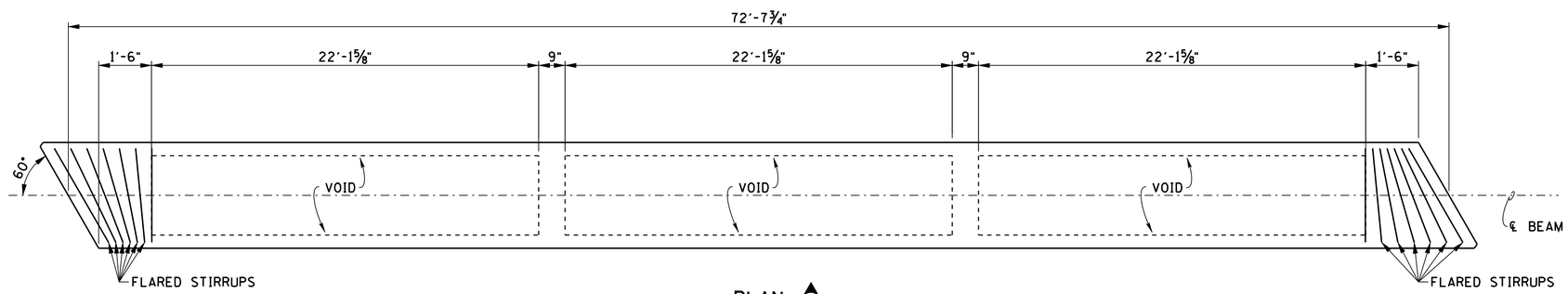

PLAN 2

BEAM NOTES: 2

* DENOTES: PROJECTING BARS

** DENOTES: NON-PROJECTING BARS

NOTE: 2'-0" MIN. SPLICE NO. 5 BARS (TYP.)

NOTE: SEE STD-14-3 FOR BOX BEAM STANDARD DETAILS, NOTES AND REINFORCING. THE CONCRETE FOR THIS CONSTRUCTION SHALL BE OF SUCH PROPERTIES AS TO ATTAIN A COMPRESSIVE STRENGTH OF NOT LESS THAN 4,000 PSI AT THE AGE OF 28 DAYS AND STRESS TRANSFER SHALL NOT BE MADE TO THE BRIDGE MEMBER UNTIL THE TEST SPECIMENS INDICATE THAT THE CONCRETE HAS REACHED A COMPRESSIVE STRENGTH OF AT LEAST 6,000 PSI. SEE GENERAL NOTES (SHEET 2) FOR CONCRETE FINISHING NOTE.

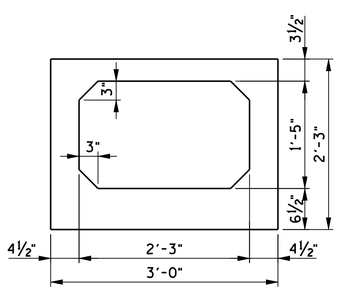

SECTION SHOWING PROPERTIES

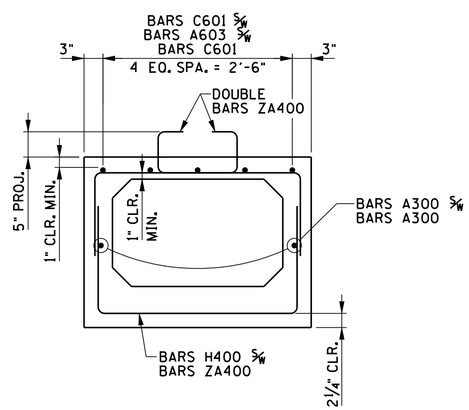

SECTION "A-A"

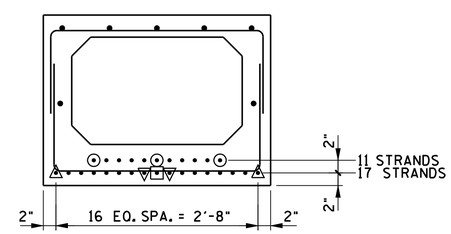

SECTION "B-B" 2

(SHOWING PRESTRESSING STRANDS @ 28 TOTAL STRANDS)

- DENOTES: BOND BREAK 6'-0" FROM END OF BEAM.
- DENOTES: BOND BREAK 8'-0" FROM END OF BEAM.
- DENOTES: BOND BREAK 14'-0" FROM END OF BEAM.
- DENOTES: BOND BREAK 22'-0" FROM END OF BEAM.

R. DARRELL JAMES REGISTERED ENGINEER NO. 16281 STATE OF TENNESSEE

04/04/2014

STATE OF TENNESSEE
DEPARTMENT OF TRANSPORTATION

PRESTRESSED CONCRETE
BOX BEAM DETAILS
(SPANS 4 AND 5)

BRIDGE NO. 11-10040-05.63 (EB & WB)
INTERSTATE 40 OVER HARPETH RIVER
CHEATHAM COUNTY
2014

DESIGNED BY D. JAMES/D. THOMPSON DATE
DRAWN BY ANGELA MOORE DATE
SUPERVISED BY D. JAMES/D. THOMPSON DATE
CHECKED BY JAMIE GILLESPIE DATE

JAMES & ASSOCIATES, INC.

BR-113-36