CONST. NO.	BR-I-40-3(155)	
PROJECT NO.	YEAR	SHEET NO.
11003-3134-94	2014	

REVISIONS

NO.	DATE	BY	BRIEF DESCRIPTION
3	11-06-13	DWT	REVISED ANCHOR BOLT TEXT

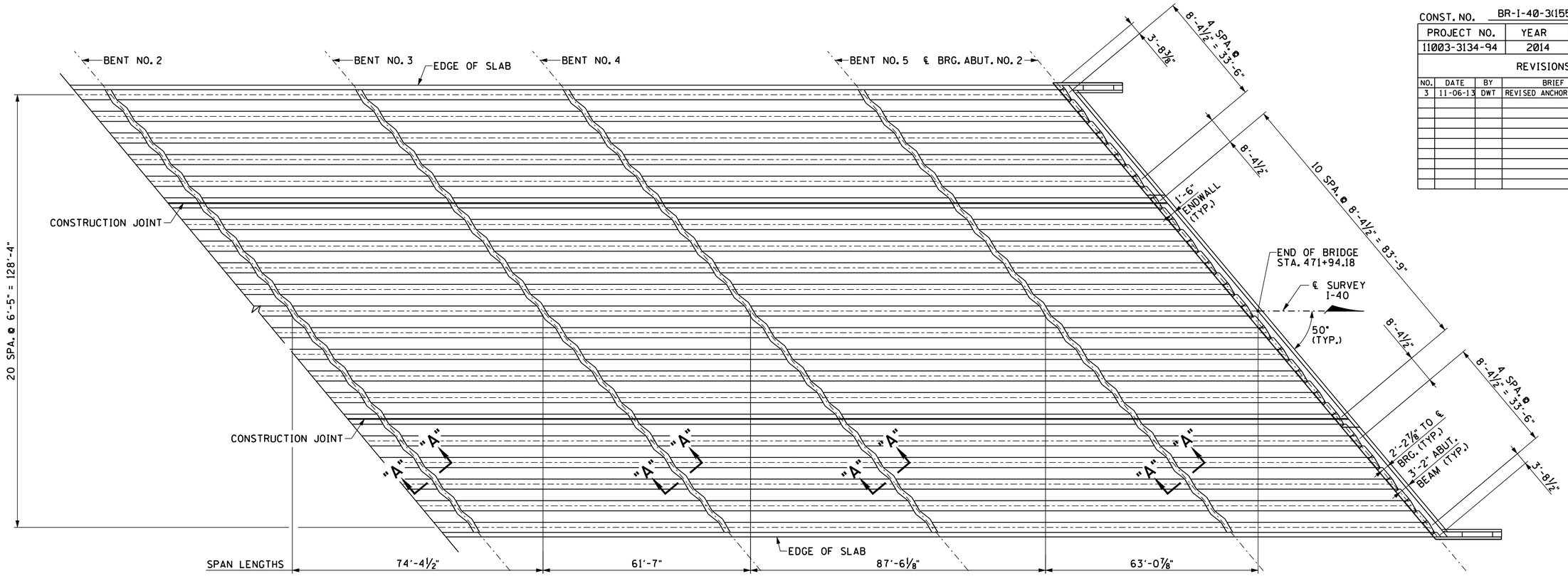

FRAMING PLAN

(NOT TO SCALE)

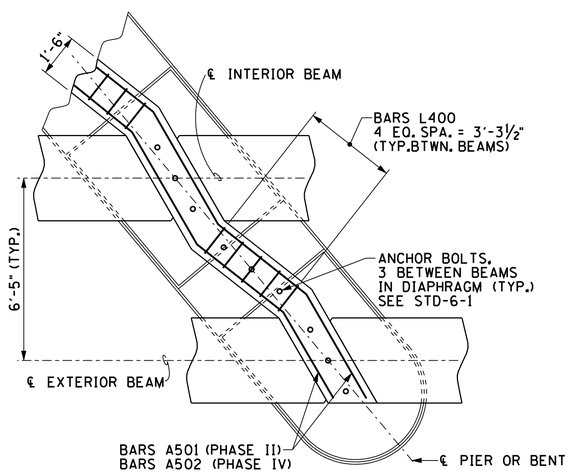

TYPICAL PART PLAN OF DIAPHRAGM 3

(NOT TO SCALE)

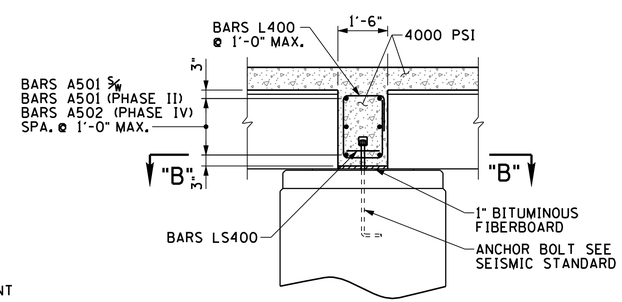

SECTION "A-A"

(NOT TO SCALE)

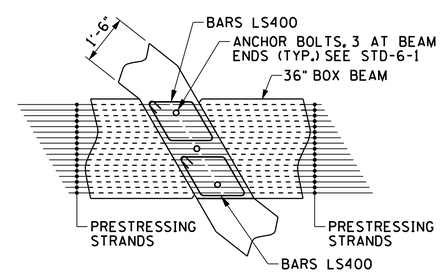

SECTION "B-B" 3

(NOT TO SCALE)

R. DARRELL JAMES
REGISTERED ENGINEER
NO. 15281
STATE OF TENNESSEE
04/04/2014

STATE OF TENNESSEE
DEPARTMENT OF TRANSPORTATION

FRAMING PLAN
(SPANS 5 THRU 8)

BRIDGE NO. 11-10040-05.63 (EB & WB)
INTERSTATE 40 OVER HARPETH RIVER
CHEATHAM COUNTY
2014

DESIGNED BY D. JAMES/D. THOMPSON DATE
DRAWN BY ANGELA MOORE DATE
SUPERVISED BY D. JAMES/D. THOMPSON DATE
CHECKED BY JAMIE GILLESPIE DATE

JAMES + ASSOCIATES INC.

BR-113-34