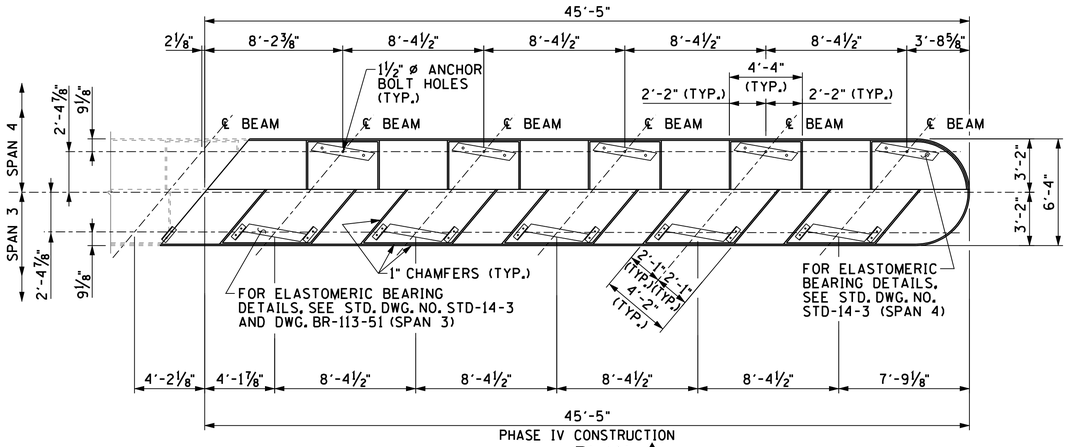

PHASE IV CONSTRUCTION

PLAN (2)

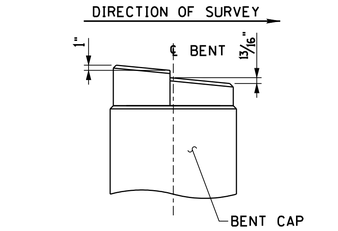

RISER BLOCK SLOPE DETAIL

NOTE: RISER BLOCK BEARING SURFACE TO CONFORM TO BOTTOM OF BEAM GRADE.

CONST. NO. BR-I-40-3(155)

PROJECT NO.	YEAR	SHEET NO.
11003-3134-94	2014	

REVISIONS

NO.	DATE	BY	BRIEF DESCRIPTION
1	02-05-13	DWT	UPDATED ELEVATIONS AND QUANTITIES
2	04-26-13	DWT	REVISED RISER BLOCKS (SPAN 3) AND
			ELASTOMERIC BEARING PAD STD. DWG.
			FROM STD-14-1 TO STD-14-3, REVISED
			BARS T550, DBL. SER. L652, DBL. SER.
			L653, AND DBL. SER. L654 QUANTITY,
			STEEL BAR REINFORCEMENT QUANTITY
			AND NOTE
3	11-15-13	DWT	REVISED QUANTITY FOR CLASS "A"
			CONCRETE AND STEEL BAR REINFORCEMENT

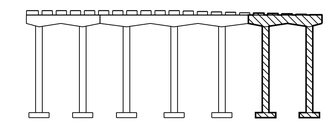

KEY

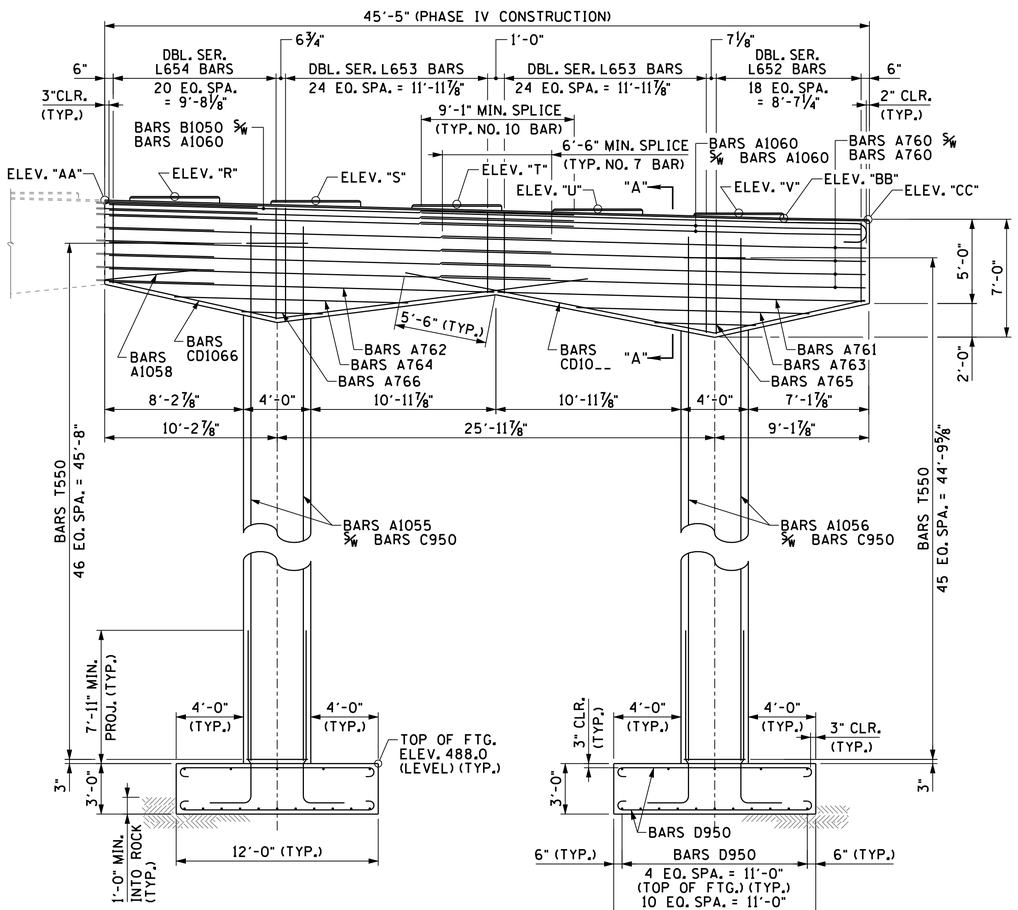

ELEVATION (2)

(LOOKING FORWARD ON SURVEY)

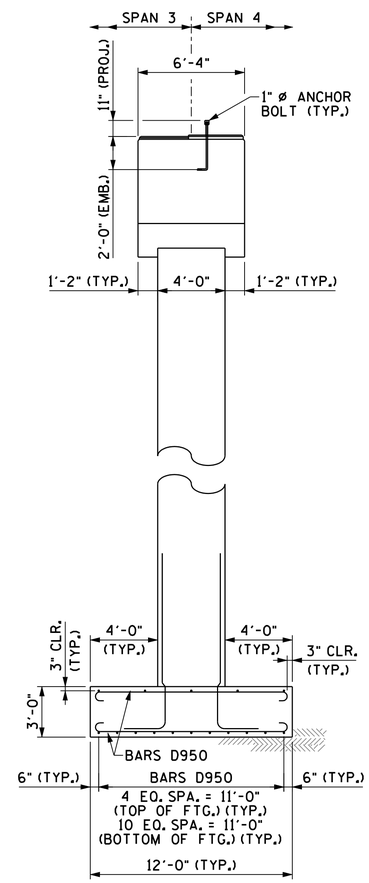

END ELEVATION

(3) ESTIMATED QUANTITIES PHASE IV CONSTRUCTION (1) (2)

ITEM	CLASS "A" CONCRETE (BRIDGES) (C.Y.)	STEEL BAR REINFORCEMENT (BRIDGES) (LBS.)
BENT NO. 1	137	38,915

TABLE OF ELEVATIONS (1)

LOCATION	EL. "R"	EL. "S"	EL. "T"	EL. "U"	EL. "V"	EL. "AA"	EL. "BB"	EL. "CC"
BENT NO. 1 (SPAN 3)	536.60	536.38	536.16	535.94	535.72	536.47	535.41	535.33
BENT NO. 1 (SPAN 4)	536.71	536.49	536.27	536.05	535.83	536.47	535.41	535.33

NOTE: WHEN POURING CAP BEAM, PROVISIONS SHALL BE MADE FOR SETTING ANCHOR BOLTS. SEE STANDARD DRAWING STD-6-1. BOLT PROJECTION 11".

NOTE: RISER BLOCKS SHALL BE POURED MONOLITHICALLY WITH THE CAP BEAM.

NOTE: ELASTOMERIC PADS SHALL BE IN PLACE A MINIMUM OF ONE DAY BEFORE BEING DISTURBED BY SETTING BEAMS ON CONCRETE. PLACE RUBBER BONDING CEMENT IN SUCH A WAY THAT VISIBLE CONCRETE SURFACES WILL NOT BE STAINED.

NOTE: SEE SHEET BR-113-53 FOR SECTIONS "A-A" AND "B-B", PLAN OF FOOTING DETAIL, COUPLER DETAIL AND RISER BLOCK REINFORCEMENT DETAIL.

(2) NOTE: COLUMN STEEL TO EXTEND 5'-9" INTO CAP BEAM.

NOTE: RISER BLOCK BEARING PAD SURFACE TO CONFORM TO BOTTOM OF BEAM GRADE.

NOTE: SEE SHEET BR-113-51 FOR BEARING PAD DETAIL AT BENT NO. 1 (SPAN 3).

04/04/2014

STATE OF TENNESSEE
DEPARTMENT OF TRANSPORTATION

BENT NO. 1
(PHASE IV - EASTBOUND)

BRIDGE NO. 11-10040-05.63 (EB & WB)
INTERSTATE 40 OVER HARPETH RIVER
CHEATHAM COUNTY
2014

DESIGNED BY D. JAMES/D. THOMPSON DATE
DRAWN BY ANGELA MOORE DATE
SUPERVISED BY D. JAMES/D. THOMPSON DATE
CHECKED BY JAMIE GILLESPIE DATE

JAMES + ASSOCIATES, INC.