TYPE	YEAR	PROJECT NO.	SHEET NO.
CONST.	2014	11003-3134-94	2D
CONST.	2014	BR-1-40-3(155)	2D

(1) 02-05-13 JRG REVISED OUTSIDE SHOULDER/ MEDIAN UPGRADE DETAIL, PROPOSED PAVEMENT SCHEDULE AND PAVEMENT TRANSITION DETAIL, CHANGED COLD PLANING ITEM NO., ADDED HAUL ROAD NOTE

(2) 04-26-13 JRG ADDED APPROACH BEAM TO PAVEMENT TRANSITION DETAIL, AND ADDED ITEM NO. 411-01.07 TO EXISTING SHOULDERS

(4) 11-15-13 JRG REVISED CROSS SLOPE FROM % TO F/FT , EDITED NOTE FOR HAUL ROAD DETAIL

TENNESSEE D.O.T. DESIGN DIVISION

FILE NO.

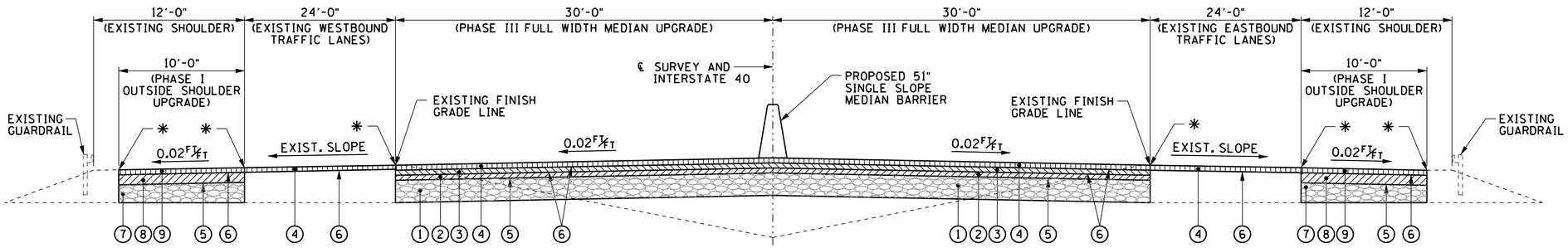

OUTSIDE SHOULDER/MEDIAN UPGRADE 1 4

(INTERSTATE 40)
N.T.S.
✱ DENOTES: 1¼" SAWCUT

NOTE: REMOVE TOPSOIL AND STOCKPILE, COST TO BE INCLUDED IN ITEM 203-01, ROAD AND DRAINAGE EXCAVATION (UNCLASSIFIED), CY.

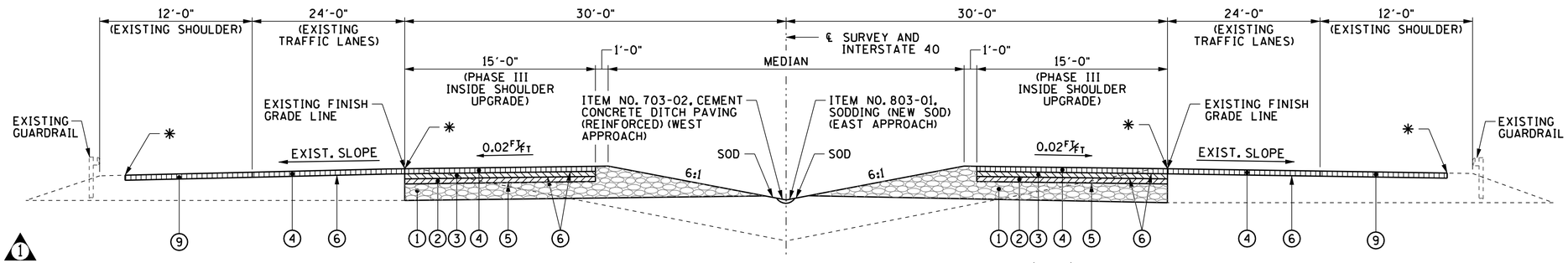

INSIDE SHOULDER/MEDIAN UPGRADE 2 4

(INTERSTATE 40)
N.T.S.
✱ DENOTES: 1¼" SAWCUT

NOTE: REMOVE TOPSOIL AND STOCKPILE, COST TO BE INCLUDED IN ITEM 203-01, ROAD AND DRAINAGE EXCAVATION (UNCLASSIFIED), CY.

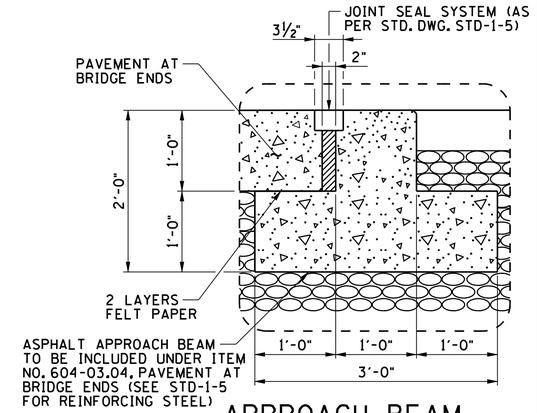

APPROACH BEAM DETAIL 2

(AT ABUTMENT NO. 2)
N.T.S.

PROPOSED PAVEMENT SCHEDULE (INTERSTATE 40 - INSIDE SHOULDER/MEDIAN)		
1	303-01	11" MINERAL AGGREGATE BASE STONE, (TYPE "A" BASE, GRADING "D")
2	307-03.01	ASPHALTIC CONCRETE BASE (10½") (PG76-22) (BPMB-HM) GRADING "A", APPLIED IN 3 EQUAL LIFTS
3	307-03.08	ASPHALTIC CONCRETE BINDER (2") (PG76-22) (BPMB-HM) GRADING "B-M2
4	411-03.10	ASPHALTIC CONCRETE SURFACE (1¼") (PG76-22) GRADING "D"
5	402-01	BITUMINOUS PRIME COAT (PC) (RATE 0.30-0.35 GAL/S.Y.)
6	403-01	BITUMINOUS TACK COAT (TC) (RATE 0.07 GAL/S.Y.) COLD PLANED (RATE 0.10 GAL/S.Y.)
PROPOSED PAVEMENT SCHEDULE (INTERSTATE 40 - OUTSIDE SHOULDER)		
7	303-01	21" MINERAL AGGREGATE BASE STONE, (TYPE "A" BASE, GRADING "D")
8	307-01.08	ASPHALTIC CONCRETE BASE (2½") (PG64-22) GRADING "B-M2"
9	411-01.07	ASPHALTIC CONCRETE SURFACE (1¼") (PG64-22) GRADING "E"

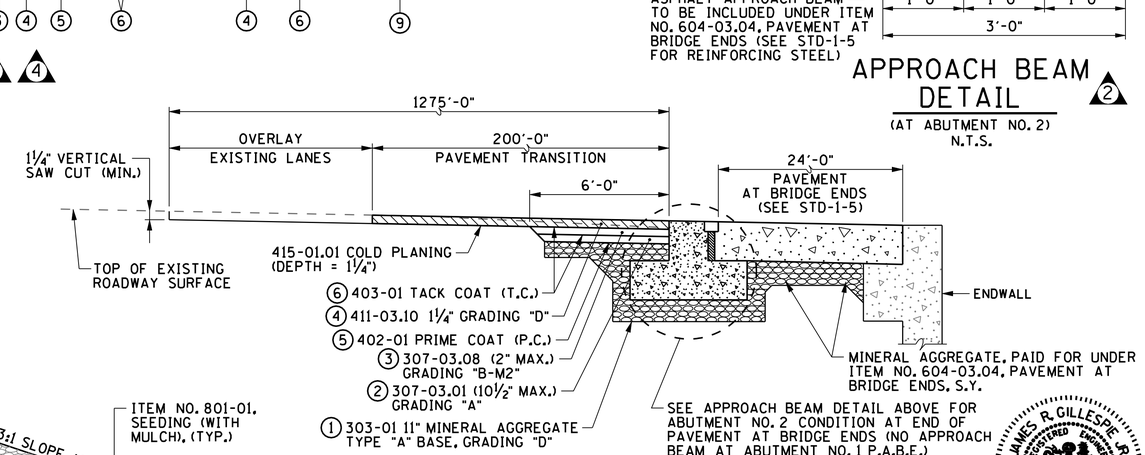

PAVEMENT TRANSITION DETAIL 1 2

(AT ABUTMENT NOS. 1, 2, AND MEDIAN)
N.T.S.

NOTE: SEE PROPOSED PAVEMENT SCHEDULE FOR INSIDE SHOULDER/MEDIAN.

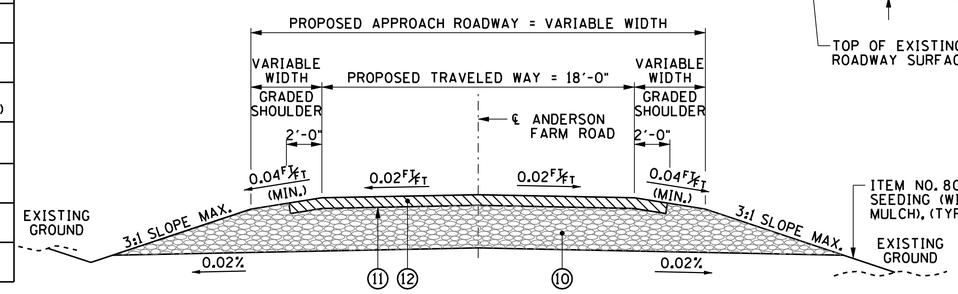

TYPICAL SECTION ANDERSON FARM ROAD 4

(BASED ON STD. DWG. RD01-TS-1A)
N.T.S.

NOTE: SEE STD. DWGS. RD01-S-11 AND RD01-S-11A FOR ADDITIONAL DETAILS.

NOTE: A MINIMUM OF 1.25" D-MIX SHALL BE CONSTRUCTED THROUGHOUT THE LIMITS OF THE PROPOSED CONSTRUCTION. COLD PLANING WILL BE REQUIRED IN CERTAIN AREAS TO PRODUCE THE FINAL ELEVATION.

PROPOSED PAVEMENT SCHEDULE (ANDERSON FARM ROAD)		
10	303-01 STONE	MINERAL AGGREGATE 8" THICK ROADWAY, 12" THICK SHOULDERS MINERAL AGGREGATE, TYPE "A" BASE, GRADING "D"
11	403-01 TACK COAT	BITUMINOUS MATERIAL FOR TACK COAT (TC) (RATE 0.07 GAL/S.Y.)
12	411-01.10 SURFACE	ASPHALTIC CONCRETE SURFACE (PG64-22) GRADING "D" @ 1¼" THICK (APPROX.) 132.5 LBS./S.Y.)

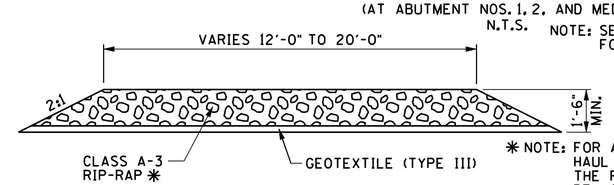

HAUL ROAD DETAIL 1 4

N.T.S.

✱ NOTE: FOR APPROXIMATELY 300 FT. OF HAUL ROAD THAT EXTENDS INTO THE RIVER, CLASS B RIP-RAP SHALL BE USED AS THE BASE LAYER WITH A 12" TOP LAYER OF A-3 RIP-RAP. ALL ITEMS ASSOCIATED WITH HAUL ROAD TO BE PAID FOR UNDER ITEM NO. 203-50.

JAMES R. GILLESPIE JR. REGISTERED ENGINEER AGRICULTURE NO. 102590 STATE OF TENNESSEE
04/04/2014

STATE OF TENNESSEE
DEPARTMENT OF TRANSPORTATION

TYPICAL SECTIONS