GENERAL NOTES

1. SPECIFICATIONS: STANDARD ROAD AND BRIDGE SPECIFICATIONS OF THE TENNESSEE DEPARTMENT OF TRANSPORTATION (MARCH 1, 2006 EDITION).
2. LOADING: HL-93 LIVE LOADING: SEISMIC CATEGORY "B" WITH As = 0.102, S_{D2} = 0.240, S_{D1}= 0.085 (1000 YEAR RETURN PERIOD). DEAD LOAD INCLUDES 35 LB/SQ. FT. FOR FUTURE WEARING SURFACE.
3. DESIGN SPECIFICATIONS: AASHTO LRFD FOURTH EDITION, 2007, WITH INTERIMS, AND THE 2009 AASHTO GUIDE SPECIFICATIONS FOR LRFD SEISMIC BRIDGE DESIGN, EDITION 1 (WITH INTERIMS).
4. CONCRETE: TO BE CLASS "A" (CAST IN PLACE) f'c = 3,000 PSI EXCEPT AS NOTED OTHERWISE.
5. CLASS "D" CONCRETE FOR BRIDGE DECKS SHALL BE IN ACCORDANCE WITH SECTION 604 OF THE STANDARD SPECIFICATIONS.
6. BRIDGE DECK SURFACE FINISH: TO BE IN ACCORDANCE WITH NOTE "C" IN ARTICLE 604.22 OF THE STANDARD SPECIFICATIONS.
7. BRIDGE DECK FORMS: BRIDGE DECK FORMS FOR CONCRETE DECKS SHALL BE CONSTRUCTED USING EITHER REMOVABLE FORMS OR PERMANENT FORMS. PERMANENT FORMS MAY BE REMAIN-IN-PLACE STEEL ONLY. FORMS SHALL BE ATTACHED BY MEANS OTHER THAN WELDING TO MAIN STRUCTURAL MEMBERS OR REINFORCING STEEL. TEMPORARY ERECTION DIAPHRAGMS MUST BE USED AT THE ENDS OF PRECAST CONCRETE GIRDERS WHERE END DIAPHRAGMS, SUPPORT DIAPHRAGMS, OR ABUTMENT BACKWALLS ARE TO BE POURED CONCURRENTLY WITH THE DECK AND SHALL BE PROVIDED ELSEWHERE IN ACCORDANCE WITH THE PECIFICATIONS TO PREVENT GIRDER ROTATION. SEE STANDARD DRAWING STD-14-3 AND ARTICLE 604.05 OF THE STANDARD SPECIFICATIONS.
8. SPECIFICATIONS: STANDARD ROAD AND BRIDGE SPECIFICATIONS OF THE TENNESSEE DEPARTMENT OF TRANSPORTATION (MARCH 1, 2006 EDITION).
9. SPECIAL NOTE: FOUNDATIONS FOR BENTS SHALL BE EXCAVATED TO THE BOTTOM OF FOOTING ELEVATIONS SHOWN; ROD SOUNDINGS SHALL THEN BE MADE AS DIRECTED BY THE ENGINEER. FROM THE RESULTS OBTAINED THE ENGINEER WILL DECIDE IF PILES WILL BE USED OR THE FOOTINGS CARRIED TO ROCK. COST OF ROD SOUNDINGS TO BE INCLUDED IN THE UNIT PRICE BID FOR OTHER ITEMS. NO REINFORCING STEEL FOR BENT COLUMNS OR FOOTINGS SHALL BE ORDERED UNTIL FINAL ELEVATIONS HAVE BEEN DETERMINED.
10. REINFORCING STEEL: SHALL BE ASTM A615 GRADE 60 UNLESS NOTED OTHERWISE. SEE SECTION 604 AND 907 OF THE STANDARD SPECIFICATIONS.
11. SHOP DRAWINGS: SEE SECTION 105.02 OF THE STANDARD SPECIFICATIONS.
12. NOTE: THE FILLS AT THE ENDS OF THE BRIDGE SHALL BE IN PLACE AND THOROUGHLY COMPACTED BEFORE ANY ABUTMENT PILES ARE DRIVEN.
13. FINISHING CONCRETE SURFACES: CONCRETE FINISHING SHALL BE IN ACCORDANCE WITH SECTION 604.21 OF THE TENNESSEE STANDARD SPECIFICATION. A CLASS 1 FINISH FOLLOWED BY AN APPLIED TEXTURE FINISH SHALL BE USED IN LIEU OF A CLASS II FINISH. NO TEXTURE FINISH SHALL BE APPLIED PRIOR TO COMPLETION OF PAVING AND HAULING OPERATIONS AT THE BRIDGE SITE. THE APPLIED TEXTURE FINISH SHALL BE MEASURED AND PAID FOR UNDER ITEM NO. 604-04.01.
14. PILES: TO BE HP10X42, DRIVEN TO REFUSAL ON ROCK OR A MINIMUM BEARING OF 55 TONS FOR THE ABUTMENTS AND BENTS.
15. FOUNDATION PREPARATION: SEE SECTION 204 OF THE STANDARD SPECIFICATIONS. IF COFFERDAMS ARE REQUIRED, THEY SHALL BE IN ACCORDANCE WITH SECTION 204.09 OF THE STANDARD SPECIFICATIONS.
16. NOTE: THE CONTRACTOR SHALL PROVIDE 100% FALL PROTECTION FOR WORKERS INSTALLING DECKING ABOVE 15 FEET.
17. FALSEWORK OVER TRAFFIC: SEE SECTION 604.06 OF THE STANDARD SPECIFICATIONS.
18. BRIDGE RAIL SYSTEM: BUILD BRIDGE RAILINGS ACCORDING TO STANDARD DRAWING STD-1-1SS. THE RAILING SHALL BE FORMED AND CAST PLUMB, NOT PERPENDICULAR, TO THE SLAB. THE DIMENSIONS AT THE TRAFFIC FACE SHALL BE KEPT CONSTANT, WITH VARIATION DUE TO CROSS SLOPE ACCOMMODATED AT THE REAR FACE.
19. NOTE: THE REINFORCED CONCRETE MEDIAN BARRIER RAIL SHALL BE CONSTRUCTED IN ACCORDANCE WITH THE DETAILS SHOWN ON DRAWING STD-1-3SS AND SHALL BE GIVEN AN APPLIED TEXTURE FINISH. THE COLOR OF THE FINISH SHALL BE SIMILAR TO WHITE, FEDERAL SPECIFICATION NO. 37886. THE COST OF THE FINISH SHALL BE INCLUDED IN THE LINEAR FOOT PRICE BID FOR THE MEDIAN RAIL. PRECAST BRIDGE DECK PANELS ARE NOT PERMITTED IN THE BAY SUPPORTING THE MEDIAN BARRIER RAIL.
20. REQUIREMENTS AND RESTRICTIONS FOR PHASE CONSTRUCTION:
    - 1 - THE STAGE CONSTRUCTION SEQUENCE MAY PROHIBIT THE EXTRACTION OF SOME COFFERDAM SHEET PILING. ALL COSTS ASSOCIATED WITH SHEET PILING SHALL BE INCLUDED IN THE LUMP SUM BID PRICE FOR FOUNDATION PREPARATION.
    - 2 - THE LOCATION OF LONGITUDINAL CONSTRUCTION JOINTS SHALL NOT BE CHANGED TO ACCOMMODATE REMAIN-IN-PLACE DECK FORMS.
    - 3 - NO SHEET PILES OR BEARING PILES MAY BE DRIVEN FROM THE EXISTING OR PROPOSED STRUCTURE.
    - 4 - (2) 24 FOOT TRAFFIC LANES SHALL BE MAINTAINED AT ALL TIMES.
21. NOTE: THE CONTRACTOR SHALL SUPPORT THE BENTS AND ABUTMENTS UNTIL THE SUPERSTRUCTURE IS IN PLACE, FALSEWORK HAS BEEN REMOVED AND BACKFILLING HAS BEEN COMPLETED.
22. CONCRETE SEALER: CONCRETE SEALER SHALL BE APPLIED TO SUBSTRUCTURES COINCIDING WITH EXPANSION JOINT LOCATIONS BEFORE PLACEMENT OF BEARING DEVICES AND APPLYING TEXTURE COATING. CONCRETE SEALER SHALL BE APPLIED TO THE FRONT VERTICAL FACE OF THE ABUTMENT BACKWALL, THE FRONT AND TOP OF THE ABUTMENT BEAM AND THE TOP AND VERTICAL SURFACES OF THE BENT AND PIER CAPS.
    CONCRETE SHALL BE CLEAN AND DRY BEFORE APPLYING THE CONCRETE SEAL, AND THE THICKNESS OF THE SEAL SHALL BE AS RECOMMENDED BY THE SEALANT MANUFACTURER. ACCEPTABLE CONCRETE SEALERS ARE INCLUDED IN THE QUALIFIED PRODUCTS LIST FOR NON-PENETRATING CONCRETE SEALS MAINTAINED BY THE DIVISION OF MATERIALS AND TESTS. THE SEALER SHALL BE CLEAR OR SIMILAR IN COLOR OF EXISTING CONCRETE SURFACES TO BE SEALED. THE COST OF THE SEALER, COMPLETE AND IN PLACE, SHALL BE INCLUDED IN THE UNIT PRICE OF THE EXPANSION DEVICE AT EACH SUBSTRUCTURE.

CONST. NO. BR-I-40-3(155)

PROJECT NO.	YEAR	SHEET NO.
11003-3134-94	2014	2

REVISIONS

NO.	DATE	BY	BRIEF DESCRIPTION
1	02-05-13	DWT	ADDED ITEM NO. 606-02.06, UPDATED QUANTITY FOR ITEM NO. 606-02.03 AND UPDATED FOOTNOTES
2	04-26-13	DWT	ADDED ITEM NOS. 602-10.05, 602-10.60 AND FOOTNOTE 19, REVISED FOOTNOTE 6 AND QTY FOR ITEM NOS. 604-02.03 AND 604-03.02
3	11-06-13	DWT	REVISED QUANTITY FOR ITEM NOS. 604-02.03, 604-05.31, 617-02 AND 617-05 REVISED FOOTNOTE 12
4	11-15-13	DWT	REVISED QUANTITY FOR ITEM NOS. 604-02.03, 604-03.01, 604-03.02, 604-03.09 AND 604-04.01

ESTIMATED BRIDGE QUANTITIES (1) (2) (3) (4)

	ITEM NO.	DESCRIPTION	UNIT	TOTAL QTY.	SUPERSTRUCTURE	ABUT. 1	PIER 1	PIER 2	BENT 1	BENT 2	BENT 3	BENT 4	BENT 5	ABUT. 2
(1)	202-04.01	REMOVAL OF STRUCTURES (BR NO. 11-10040-5.63 EB)	LS	1										
(1)	202-04.02	REMOVAL OF STRUCTURES (BR NO. 11-10040-5.63 WB)	LS	1										
(2)	204-02.01	DRY EXCAVATION (BRIDGES)	CY	3,770		230	40	40	870	600	600	600	600	190
(2)	204-03.01	WET EXCAVATION (BRIDGES)	CY	1,500			490	490	520					
(2)	204-04.01	ROCK EXCAVATION (BRIDGES)	CY	120			40	40	40					
	204-05	ROCK DRILLING (BRIDGES)	LF	414		36	126	126	126					
(3)	204-10.01	FOUNDATION PREPARATION (PIER NO. 1, STA. 466+54.82)	LS	1			1							
(3)	204-10.02	FOUNDATION PREPARATION (PIER NO. 2, STA. 467+42.34)	LS	1				1						
(3)	204-10.03	FOUNDATION PREPARATION (BENT NO. 1, STA. 468+31.55)	LS	1					1					
(4)	303-01.02	GRANULAR BACKFILL (BRIDGES)	TON	100		50								50
(19)	602-10.05	BRACING REPAIRS	LS	1										
	602-10.60	BEARING DEVICE (3 1/8" ELASTOMERIC BEARING PAD)	EACH	21										
(18)(5)	604-02.03	EPOXY COATED REINFORCING STEEL	LB	674,130	661,580	6,350								6,200
(6)	604-03.01	CLASS A CONCRETE (BRIDGES)	CY	3,555		222	469	459	511	447	440	432	425	150
(18)	604-03.02	STEEL BAR REINFORCEMENT (BRIDGES)	LB	977,290	15,210	17,650	132,315	139,790	149,245	129,970	128,100	126,390	123,715	14,905
(7)	604-03.04	PAVEMENT AT BRIDGE ENDS	SY	720		360								360
	604-03.09	CLASS D CONCRETE (BRIDGE DECK)	CY	2,530										
	604-04.01	APPLIED TEXTURE FINISH (NEW STRUCTURES)	SY	6,620	2,000	210	710	690	630	580	560	540	520	180
	604-04.04	BRIDGE END DRAINS (4'x8')	EACH	2										
(8)	604-05.31	BRIDGE DECK GROOVING (MECHANICAL)	SY	9,800										
(9)	604-11.01	EXPANSION DEVICE (4" STRIP SEAL JOINT)	LF	175										
(10)	606-02.03	STEEL PILES (10 INCH)	LF	6,830						1,500	1,360	1,520	1,540	910
(11)	606-02.06	PILE TIPS (STEEL PILES, 10 INCH)	EACH	471						112	112	112	112	23
(12)	615-02.04	PRESTRESSED CONCRETE BOX BEAM (27" x 36")	LF	12,779										
(13)	617-02	BRIDGE DECK CRACK SEALING	LF	3,040										
(14)	617-05	SEALANT (HMWM)	GAL	16										
(15)	620-05.01	CONC PARAPET SINGLE SLOPE (STD-1-1SS)	LF	1,321										
(16)	710-09.01	6" PERFORATED PIPE WITH VERTICAL DRAIN SYSTEM	LF	410		205								205
	710-09.02	6" PIPE UNDERDRAIN	LF	28		14								14
	711-05.74	CONC MEDIAN BARR SING SLOPE (STD-1-3SS)	LF	677										
(17)	712-02.47	BRIDGE MOUNTED INTERCONNECTED PORTABLE BARRIER RAIL	LF	2,516										

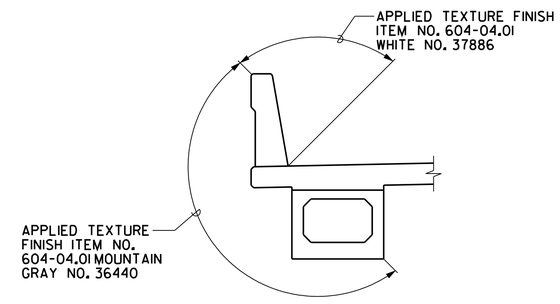

TYPICAL AT BOX BEAM

APPLIED TEXTURE FINISH SKETCH

N.T.S.

NOTE: COST OF TEXTURE COATING SHALL BE INCLUDED IN ITEM NO. 604-04.01 AND INCLUDES CONCRETE BRIDGE PARAPETS, WINGWALLS, EXTERIOR BOX BEAMS, ALL EXPOSED SURFACES OF ABUTMENTS, PIERS AND BENTS.

NOTE: BEFORE APPLYING ANY TEXTURE FINISH, ALL SURFACES SHALL BE COMPLETELY CLEANED OF ALL DEBRIS AND FOREIGN MATERIALS.

NOTE: THE CONTRACTOR SHALL USE CONTAINMENT SCREENS OR OTHER MEASURES AS NECESSARY TO PREVENT ANY TEXTURE COATING FROM ENTERING THE ENVIRONMENT. CONTAINMENT MEASURES SHALL BE APPROVED BY THE ENGINEER AND COST SHALL BE INCLUDED IN ITEMS BID ON.

NOTE: CONCRETE FINISHING SHALL BE IN ACCORDANCE WITH SECTION 604.22 OF THE TENNESSEE STANDARD SPECIFICATION. A CLASS 1 FINISH FOLLOWED BY AN APPLIED TEXTURE FINISH SHALL BE USED IN LIEU OF A CLASS II FINISH. THE COLOR OF THE FINISH SHALL BE SIMILAR TO MOUNTAIN GRAY, FEDERAL SPECIFICATION NO. 36440, FEDERAL COLOR STANDARD NO. 595A, EXCEPT THAT THE INSIDE FACE AND TOP OF THE PARAPET SHALL BE WHITE, FEDERAL SPECIFICATION NO. 37886. A COLOR SAMPLE SHALL BE SUBMITTED TO THE ENGINEER FOR APPROVAL. NO TEXTURE FINISH SHALL BE APPLIED PRIOR TO COMPLETION OF PAVING AND HAUL OPERATIONS AT THE BRIDGE SITE. THE APPLIED TEXTURE FINISH SHALL BE MEASURED AND PAID FOR UNDER ITEM NO. 604-04.01.

FOOTNOTES: (1) (2) (3)

(1) LUMP SUM: EXISTING BRIDGES AND APPROACHES TO BE REMOVED TO NATURAL GROUND BETWEEN STA. 464+73.00 AND STA. 472+88.00 (WESTBOUND AND EASTBOUND BRIDGES). EXISTING STRUCTURES CONSISTS OF 14 SPAN PRESTRESSED I-BEAMS WITH CONCRETE SUBSTRUCTURES. TOTAL LENGTH = 628'-4 1/4", TOTAL WIDTH = 44'-0" (WESTBOUND) AND 44'-0" (EASTBOUND).

(2) EXCAVATION BASED ON FINAL PROFILE AT THE ABUTMENTS AND EXISTING GROUND LINE AT BENTS.

(3) SEE FOUNDATION PREPARATION NOTE THIS SHEET.

(4) GRANULAR BACKFILL SHALL BE CLASS "A" GRADING "D" MATERIAL. SEE STANDARD DRAWING STD-10-1.

(5) INCLUDES QUANTITY OF STEEL REQUIRED FOR BRIDGE DECK, BACKWALLS, ABUTMENTS, PIERS AND BENTS. REBAR QUANTITIES NOT INCLUDED IN THIS ITEM FOR PAVEMENT AT BRIDGE ENDS AND PARAPETS. ALSO INCLUDES THE COST OF 2,561 MECHANICAL COUPLERS. 4 NO. 4, 1,673 NO. 5, 32 NO. 6, 180 NO. 7 AND 672 NO. 10.

(6) THE COST OF ALL MATERIALS AND LABOR NECESSARY FOR THE INSTALLATION OF 861 ANCHOR BOLT ASSEMBLIES AND ALL 6"x4"x1/2" ANGLES AND BOLTS SHALL BE INCLUDED IN THE UNIT PRICE BID FOR ITEM NO. 604-03.01, CLASS "A" CONCRETE (BRIDGES).

(7) PRIOR TO CONSTRUCTION OF THE PAVEMENT AT BRIDGE ENDS, THE CONTRACTOR SHALL SUBMIT A PROPOSED BILL OF STEEL, INCLUDING MECHANICAL BAR SPLICERS, TO THE ENGINEER FOR APPROVAL. 24'-0" PAVEMENT AT BRIDGE ENDS REQUIRED AT BOTH BRIDGE ENDS. COST OF CONCRETE, REINFORCING STEEL, JOINT MATERIALS, LABOR AND ALL OTHER MATERIALS REQUIRED TO CONSTRUCT THE PAVEMENT AT BRIDGE ENDS AND ASPHALT APPROACH BEAM SHALL BE INCLUDED IN THIS ITEM. SEE STD. DWGS. STD-1-5 AND STD-1-7 FOR QUANTITIES TO BE INCLUDED IN THIS ITEM.

(8) INCLUDES ALL LABOR AND MATERIALS REQUIRED TO MECHANICALLY GROOVE THE BRIDGE DECK AND PAVEMENT AT BRIDGE ENDS AND TO REMOVE GROOVING RESIDUE.

(9) THE PRICE BID FOR ROADWAY EXPANSION DEVICES TO INCLUDE THE COST OF 200 S.Y. OF CONCRETE SEAL REQUIRED. SEE GENERAL NOTES FOR DESCRIPTION OF CONCRETE SEAL.

(10) INCLUDES THE COST OF ALL LABOR AND MATERIALS FOR THE INSTALLATION OF STEEL PILES. PILES SHALL BE EQUIPPED WITH CAST STEEL POINTS. ALSO, SEE STANDARD DRAWING STD-5-1 FOR ADDITIONAL NOTES.

(11) INCLUDES THE COST OF ALL LABOR AND MATERIALS FOR THE INSTALLATION OF CAST STEEL PILE POINTS. THE UNIT PRICE BID FOR THE CAST STEEL POINTS SHALL INCLUDE FURNISHING AND INSTALLATION TO THE PILES.

(12) COST OF ELASTOMERIC PADS AND RUBBER BONDING CEMENT TO BE INCLUDED IN THE UNIT PRICE BID FOR THE PRESTRESSED BEAM.

(13) INCLUDES ALL COSTS FOR INSTALLING THE BRIDGE DECK CRACK SEALER (HMWM) INCLUDING CRACK PREPARATION, CLEANING, LABOR AND ALL MISCELLANEOUS MATERIALS REQUIRED TO SEAL THE LONGITUDINAL PHASE CONSTRUCTION JOINTS AT TOP OF THE BRIDGE DECK AND PAVEMENT AT BRIDGE ENDS. ALSO, AT THE TOP OF BRIDGE DECK, TOE OF BRIDGERAIL (LONGITUDINAL), AND THE TRANSVERSE CONSTRUCTION JOINT BETWEEN BRIDGE DECK AND PAVEMENT AT BRIDGE ENDS ACCORDING TO STANDARD SPECIFICATIONS AND MANUFACTURER SPECIFICATIONS. THIS ITEM DOES NOT INCLUDE THE COST OF FURNISHING THE BRIDGE SEALANT ITSELF.

(14) INCLUDES ALL COST FOR FURNISHING THE SEALANT (HMWM) FOR SEALING CRACKS. THE SEALANT (HMWM) SHALL BE IN ACCORDANCE WITH STANDARD SPECIFICATIONS.

(15) COST OF 82 BRIDGE DECK DRAINS TO BE INCLUDED IN THE UNIT PRICE BID FOR THE PARAPET.

(16) COST OF POLYETHYLENE SHEETING AND ALL MISCELLANEOUS ITEMS NECESSARY FOR INSTALLATION TO BE INCLUDED IN THE UNIT PRICE BID FOR PERFORATED PIPE.

(17) INCLUDES 1258 L.F. FOR PHASE II AND 1258 L.F. FOR PHASE IV.

(18) MECHANICAL BAR SPLICERS MUST BE ON THE APPROVED LIST MAINTAINED BY THE DIVISION OF MATERIALS AND TESTS. THE BAR SPLICER SHALL MEET AASHTO STANDARD SPECIFICATIONS FOR MECHANICAL CONNECTION. WHEN EPOXY COATING IS REQUIRED, THE EXPOSED THREADS SHALL BE REPAIRED AFTER SPLICING ACCORDING TO SECTION 907 OF THE STANDARD SPECIFICATIONS. THE COST OF FURNISHING THE BAR SPLICERS, (AND EPOXY COATING WHEN REQUIRED) INCLUDING ALL LABOR AND MATERIALS NECESSARY FOR COMPLETE INSTALLATION, SHALL BE INCLUDED IN THE UNIT PRICE BID FOR ITEM NO. 604-02.03 AND ITEM NO. 604-03.02.

(19) INCLUDES ALL NECESSARY TEMPORARY SUPPORT OF THE STRUCTURE DURING THE DURATION OF THE PROJECT. INCLUDES TEMPORARY SUPPORT OF EXISTING SLAB AND EXISTING SUBSTRUCTURE DURING TRAFFIC LOADING. BRACING PLANS SHALL BE SUBMITTED TO THE ENGINEER FOR APPROVAL.

NOTE: THE COST OF BITUMINOUS FIBERBOARD AND ALL MISCELLANEOUS JOINT MATERIAL TO BE INCLUDED IN THE UNIT PRICE BID FOR OTHER ITEMS.

NOTE: THE EXPANSION JOINT AT BENT NO. 1 SHALL BE IN ACCORDANCE WITH SECTION 623.03 OF THE STANDARD SPECIFICATIONS. THE TOTAL REQUIRED MOVEMENT IS 4 INCHES. SHOP DRAWINGS SHALL BE SUBMITTED TO THE ENGINEER OF STRUCTURES FOR APPROVAL.

DESIGNED BY D. JAMES/D. THOMPSON DATE
DRAWN BY ANGELA MOORE DATE
SUPERVISED BY D. JAMES/D. THOMPSON DATE
CHECKED BY JAMIE GILLESPIE DATE

JAMES & ASSOCIATES, INC.

R. DARRELL JAMES REGISTERED ENGINEER NO. 16281 STATE OF TENNESSEE
04/04/2014

STATE OF TENNESSEE
DEPARTMENT OF TRANSPORTATION

GENERAL NOTES,
ESTIMATED BRIDGE QUANTITIES
AND MISC. DETAILS

BRIDGE NO. 11-10040-05.63 (EB & WB)
INTERSTATE 40 OVER HARPETH RIVER
CHEATHAM COUNTY
2014

BR-113-23