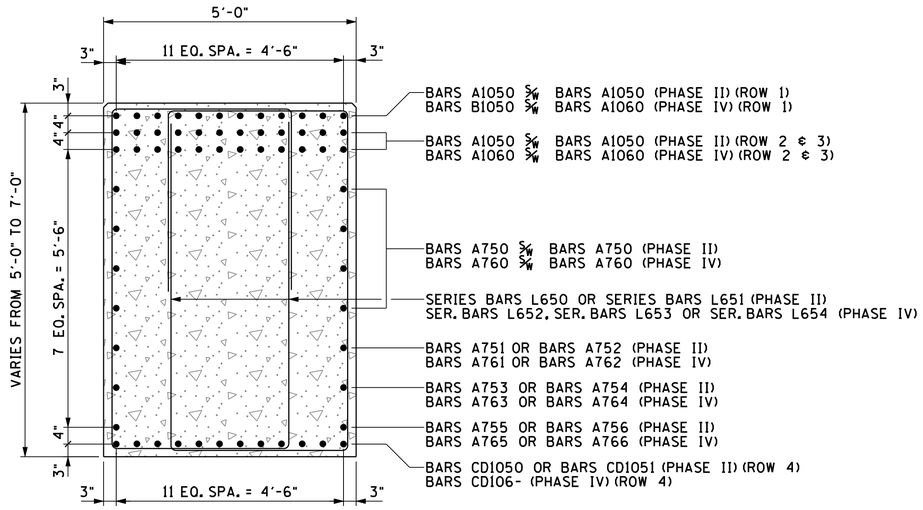

SECTION "A-A"

(NOT TO SCALE)

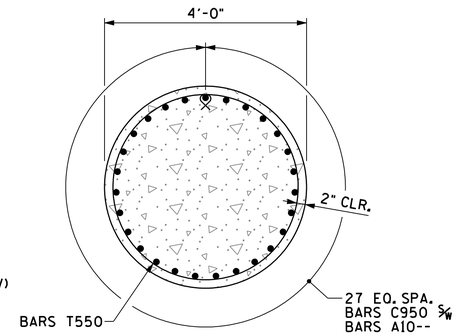

SECTION "B-B"

(NOT TO SCALE)

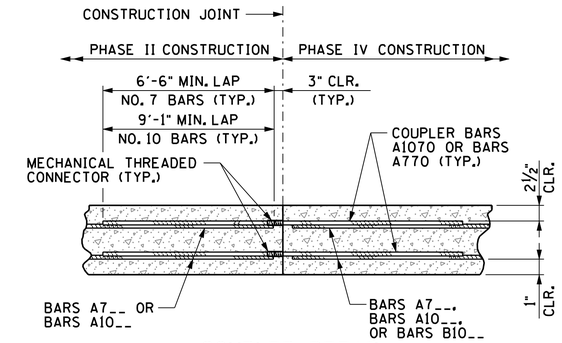

COUPLER DETAIL

(NOT TO SCALE)

NOTE: THE COST OF MECHANICAL THREADED CONNECTORS AND THE COST OF THREADING THE COUPLER BARS SHALL BE INCLUDED IN THE PRICE BID FOR ITEM NO. 604-02.03, EPOXY COATED REINFORCING STEEL, L.B.

NOTE: DETAIL IS TYPICAL FOR CONSTRUCTION JOINT BETWEEN PHASES II AND IV.

CONST. NO. BR-I-40-3(155)

PROJECT NO.	YEAR	SHEET NO.
11003-3134-94	2014	

REVISIONS

NO.	DATE	BY	BRIEF DESCRIPTION
1	02-05-13	DWT	UPDATED FTG. DETAIL FOR BENT NO. 5

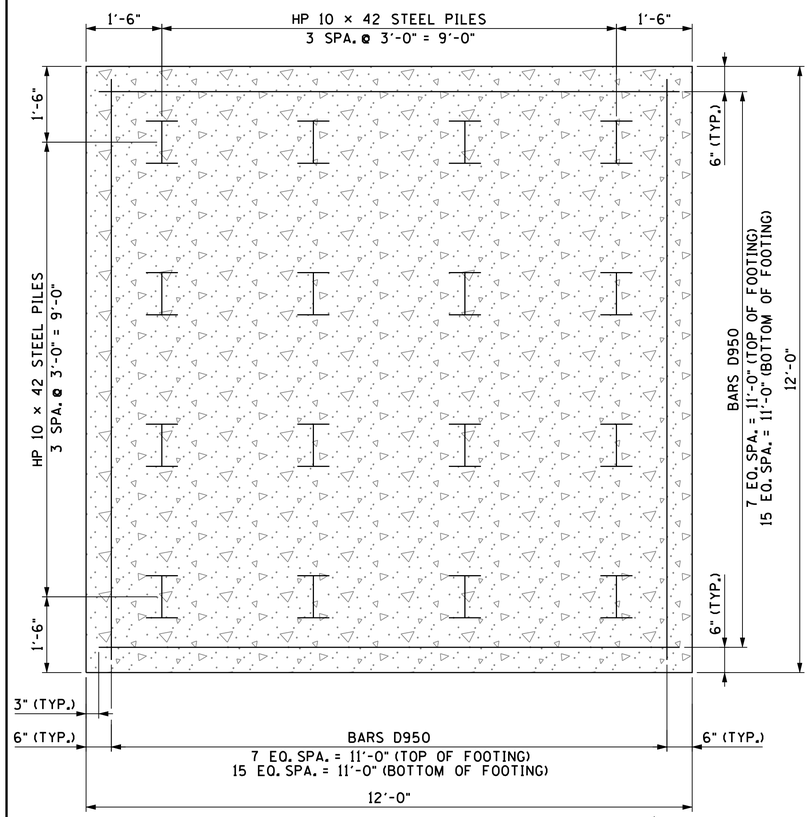

PLAN OF FOOTING - BENT NOS. 2 THRU 5 (1)

(NOT TO SCALE)

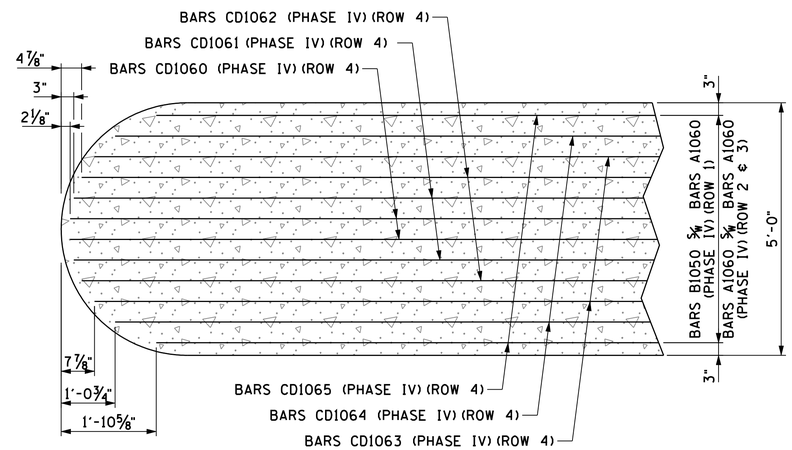

PLAN OF MAIN REINFORCEMENT

(NOT TO SCALE)

04/04/2014

STATE OF TENNESSEE
DEPARTMENT OF TRANSPORTATION

BENT NOS. 2 THRU 5 DETAILS

BRIDGE NO. 11-10040-05.63 (EB & WB)
INTERSTATE 40 OVER HARPETH RIVER
CHEATHAM COUNTY
2014

DESIGNED BY D. JAMES/D. THOMPSON DATE
DRAWN BY ANGELA MOORE DATE
SUPERVISED BY D. JAMES/D. THOMPSON DATE
CHECKED BY JAMIE GILLESPIE DATE

JAMES & ASSOCIATES, INC.

BR-113-57