CONST. NO. BR-I-40-3(155)

PROJECT NO.	YEAR	SHEET NO.
11003-3134-94	2014	

REVISIONS

NO.	DATE	BY	BRIEF DESCRIPTION
1	02-05-13	DWT	UPDATED ELEVATIONS AND QUANTITIES
2	04-26-13	DWT	REVISED ELASTOMERIC BEARING PAD
			STD. DWG. FROM STD-14-1 TO STD-14-3,
			REVISED BARS T550, DBL. SER. L652,
			DBL. SER. L653, AND DBL. SER. L654
			QUANTITY, STEEL BAR REINFORCEMENT
			QUANTITY AND NOTE
3	11-15-13	DWT	REVISED QUANTITY FOR CLASS "A"
			CONCRETE AND STEEL BAR REINFORCEMENT

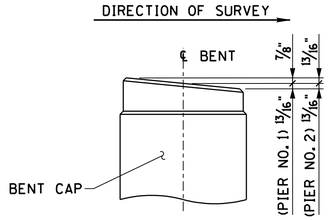

RISER BLOCK SLOPE DETAIL

NOTE: RISER BLOCK BEARING SURFACE TO CONFORM TO BOTTOM OF BEAM GRADE.

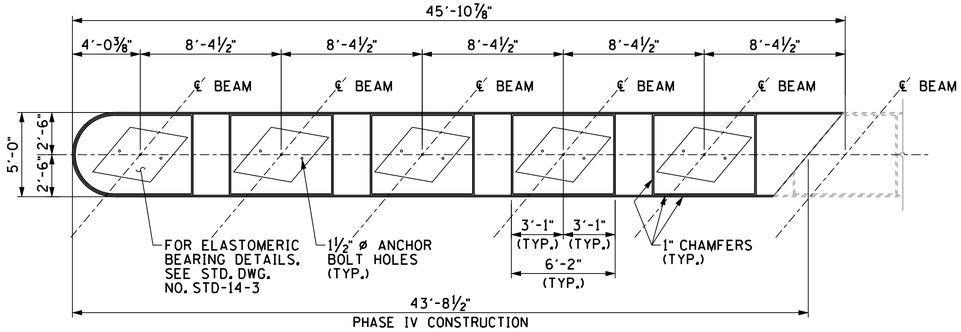

PLAN 2

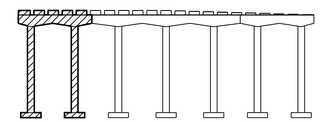

KEY

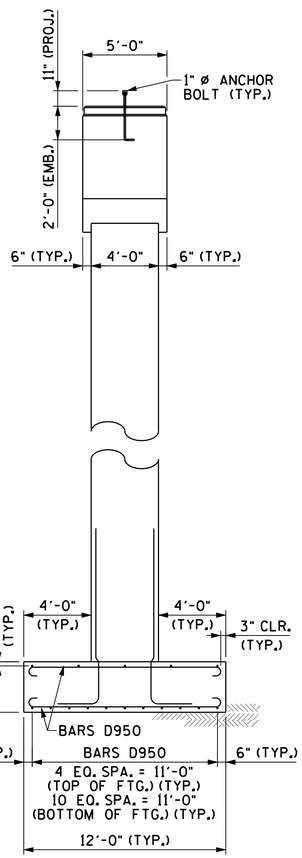

END ELEVATION

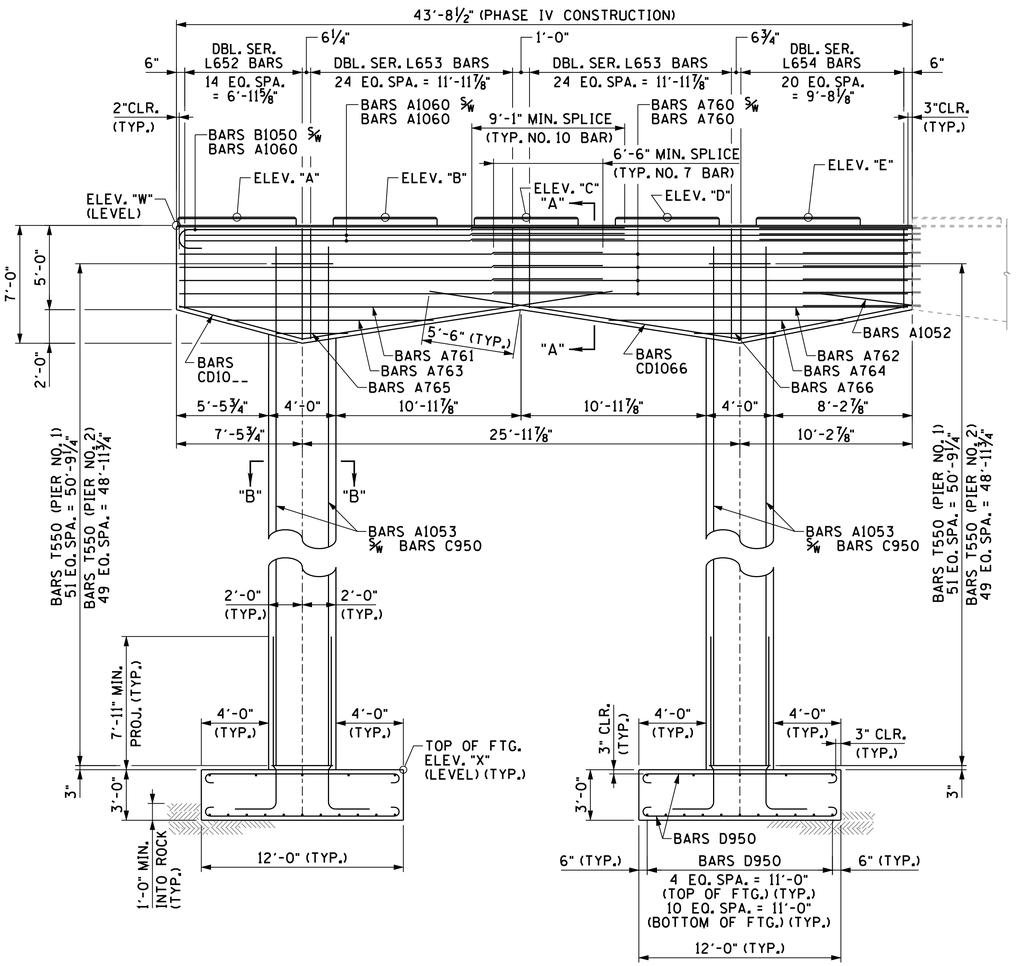

ELEVATION 2

(LOOKING FORWARD ON SURVEY)

TABLE OF ELEVATIONS 1

LOCATION	EL. "A"	EL. "B"	EL. "C"	EL. "D"	EL. "E"	EL. "W"	EL. "X"
PIER NO. 1	541.78	541.77	541.77	541.77	541.77	541.29	488.00
PIER NO. 2	539.73	539.74	539.75	539.76	539.77	539.48	488.00

3 ESTIMATED QUANTITIES PHASE IV CONSTRUCTION 1 2

ITEM	CLASS "A" CONCRETE (BRIDGES) (C.Y.)	STEEL BAR REINFORCEMENT (BRIDGES) (LBS.)
PIER NO. 1	128	36,865
PIER NO. 2	124	38,600

NOTE: WHEN POURING CAP BEAM, PROVISIONS SHALL BE MADE FOR SETTING ANCHOR BOLTS. SEE STANDARD DRAWING STD-6-1. BOLT PROJECTION 11".

NOTE: RISER BLOCKS SHALL BE POURED MONOLITHICALLY WITH THE CAP BEAM.

NOTE: ELASTOMERIC PADS SHALL BE IN PLACE A MINIMUM OF ONE DAY BEFORE BEING DISTURBED BY SETTING BEAMS ON CONCRETE. PLACE RUBBER BONDING CEMENT IN SUCH A WAY THAT VISIBLE CONCRETE SURFACES WILL NOT BE STAINED.

NOTE: SEE SHEET BR-113-49 FOR SECTIONS "A-A" AND "B-B", PLAN OF FOOTING DETAIL, PLAN OF MAIN REINFORCEMENT AND COUPLER DETAIL.

2 NOTE: COLUMN STEEL TO EXTEND 5'-9" INTO CAP BEAM.

NOTE: RISER BLOCK BEARING PAD SURFACE TO CONFORM TO BOTTOM OF BEAM GRADE.

R. DARRELL JAMES REGISTERED ENGINEER NO. 16231 STATE OF TENNESSEE
04/04/2014

STATE OF TENNESSEE
DEPARTMENT OF TRANSPORTATION

PIER NOS. 1 AND 2
(PHASE IV - WESTBOUND)

BRIDGE NO. 11-10040-05.63 (EB & WB)
INTERSTATE 40 OVER HARPETH RIVER
CHEATHAM COUNTY
2014

DESIGNED BY D. JAMES/D. THOMPSON DATE
DRAWN BY ANGELA MOORE DATE
SUPERVISED BY D. JAMES/D. THOMPSON DATE
CHECKED BY JAMIE GILLESPIE DATE

JAMES & ASSOCIATES, INC.