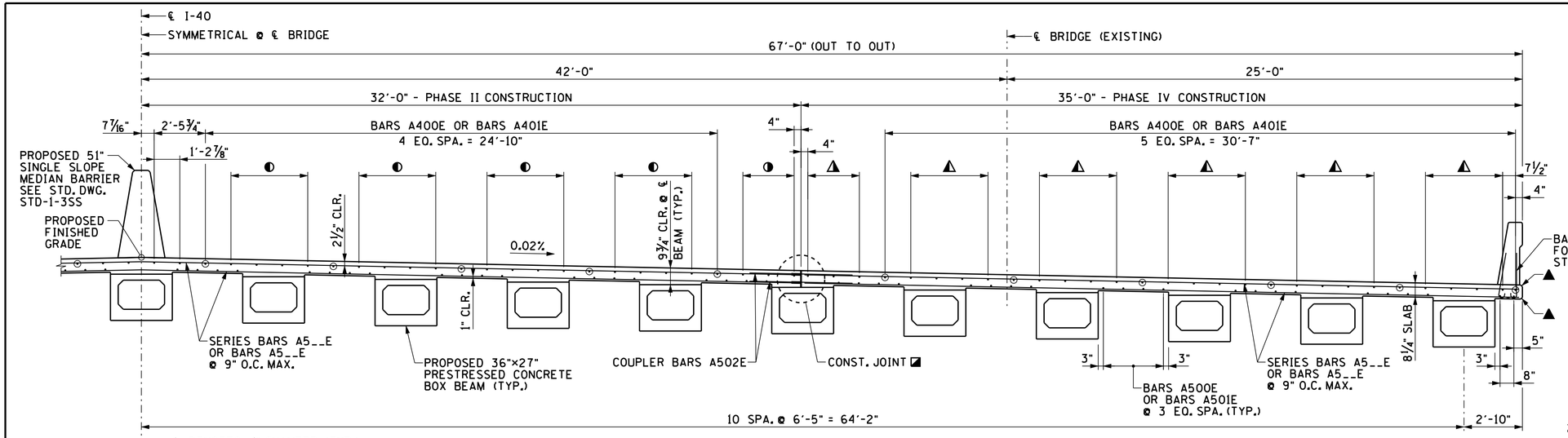

▲ DENOTES: 1" CHAMFER (TYP.)

◪ DENOTES: SEAL CONSTRUCTION JOINTS WITH CRACK SEALER. TO BE INCLUDED IN ITEM NOS. 612-02 AND 617-05.

◭ DENOTES: TOP BARS A900E OR BARS A901E 3 EQ. SPA. = 3'-9"

◬ DENOTES: TOP BARS A900E OR BARS A901E 2 EQ. SPA. = 2'-6"

TYPICAL CROSS SECTION AT MIDSPAN

(FOR SUPERSTRUCTURE DETAILS, SEE DWG. NO. BR-113-29 THRU BR-113-32)

◐ DENOTES: TOP BARS A900E OR BARS A901E 3 EQ. SPA. = 3'-8 3/4"

◑ DENOTES: TOP BARS A900E OR BARS A901E 2 EQ. SPA. = 2'-5 3/4"

⊙ DENOTES: BARS A400E OR BARS A401E

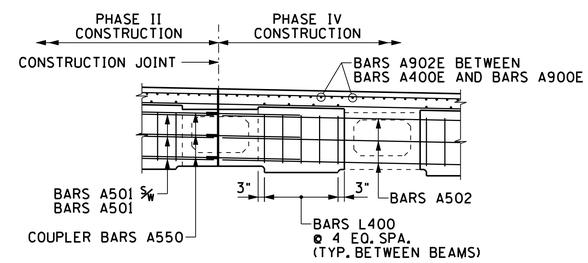

PART TYPICAL CROSS SECTION @ PIERS

(NOT TO SCALE)

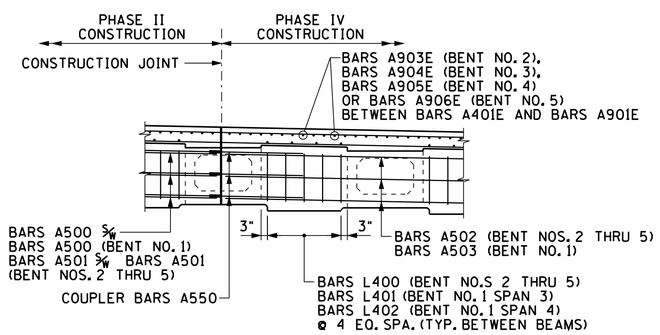

PART TYPICAL CROSS SECTION @ BENTS

(NOT TO SCALE)

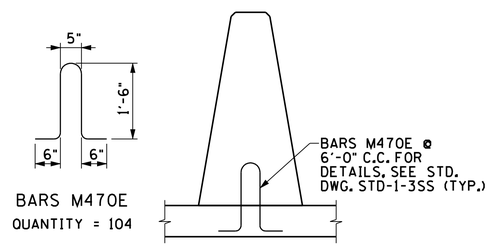

PERMANENT MEDIAN BARRIER

(NOT TO SCALE)

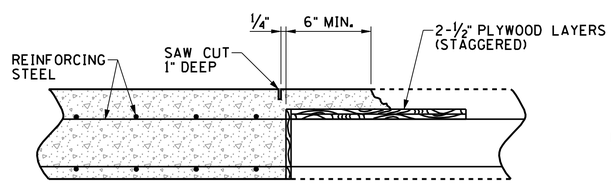

SLAB CONSTRUCTION JOINT DETAIL

(NOT TO SCALE)

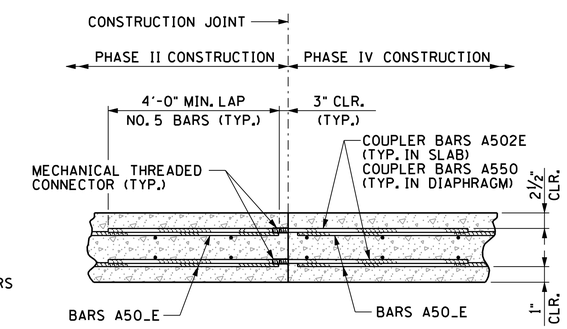

COUPLER DETAIL

(NOT TO SCALE)

NOTE: THE COST OF MECHANICAL THREADED CONNECTORS AND THE COST OF THREADING THE COUPLER BARS SHALL BE INCLUDED IN THE PRICE BID FOR ITEM NO. 604-02.03, EPOXY COATED REINFORCING STEEL, L.B.

NOTE: DETAIL IS TYPICAL FOR CONSTRUCTION JOINT BETWEEN PHASES II AND IV.

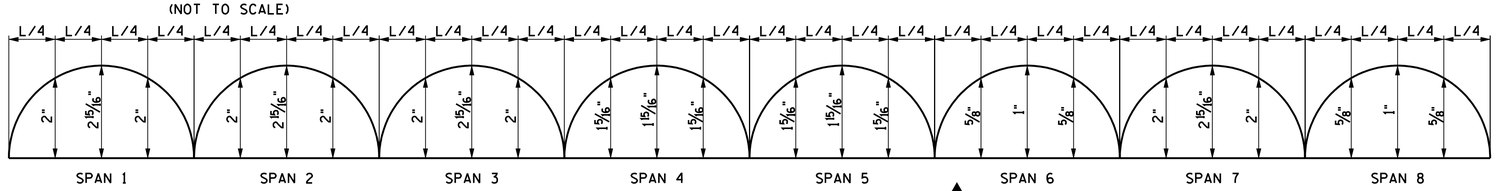

DEAD LOAD CORRECTION CURVE ◭2

NOTE: THIS CURVE IS FOR SLAB DEAD LOAD AND ALL DEAD LOADS THAT ARE APPLIED AFTER THE SLAB IS IN PLACE AND SHOULD BE CORRECTED TO COMPENSATE FOR THE EFFECTS DUE TO VERTICAL CURVE.

CONST. NO. BR-I-40-3(155)

PROJECT NO.	YEAR	SHEET NO.
11003-3134-94	2014	

REVISIONS

NO.	DATE	BY	BRIEF DESCRIPTION
1	02-05-13	DWT	REVISED EPOXY COATED REINFORCING STEEL QUANTITY
2	04-26-13	DWT	REVISED DEAD LOAD CORRECTION CURVE
3	11-06-13	DWT	REVISED EPOXY COATED REINFORCING STEEL QUANTITY
4	11-15-13	DWT	REVISED QUANTITY FOR CLASS "D" CONCRETE, EPOXY COATED REINFORCING STEEL AND STEEL BAR REINFORCEMENT

NOTES:

1. THE CONTRACTOR SHALL BE RESPONSIBLE FOR THE STABILITY OF THE STRUCTURE DURING SLAB REPLACEMENT. DESIGN CALCULATION AND DETAILS OF TEMPORARY SUPPORT SYSTEM OR FALSEWORK REQUIRED SHALL BE SUBMITTED TO THE ENGINEER FOR REVIEW AND SHALL MEET WITH THE FULL SATISFACTION OF THE ENGINEER BEFORE ANY DEMOLITION IS BEGUN. COST OF STABILIZING THE STRUCTURE SHALL BE INCLUDED IN ITEM NO. 602-10.05, BRACING REPAIRS, L.S.
2. FOR STANDARD REINFORCING DETAILS OF PARAPET, SEE STD-1-1SS.
3. WHEN POURING SLAB, PROVISIONS SHALL BE MADE FOR SETTING REINFORCING STEEL FOR THE PARAPET. THE PARAPET SHALL NOT BE POURED UNTIL THE SLAB IS POURED AND CURED.
4. THE COST OF CONCRETE REQUIRED FOR THE NEW BRIDGE DECK SLAB AND GIRDER ENCASEMENT AT ABUTMENTS SHALL BE INCLUDED IN THE PRICE BID FOR ITEM NO. 604-03.09, CLASS "D" CONCRETE (BRIDGE DECK), C.Y.
5. ALL REINFORCING STEEL FOR THE NEW CONCRETE SLAB SHALL BE EPOXY COATED. REINFORCING STEEL TO BE INCLUDED IN THE PRICE BID FOR ITEM NO. 604-02.03, EPOXY COATED REINFORCING STEEL, LBS.
6. THE COST OF REMOVING AND DISPOSING OF THE EXISTING CONCRETE SLAB, WITHIN THE LIMITS SHOWN, SHALL BE INCLUDED IN ITEM NOS. 202-04.01 AND 202-04.02, REMOVAL OF STRUCTURES, L.S.

◭4 ESTIMATED QUANTITIES PHASE II CONSTRUCTION ◭3

CLASS "D" CONCRETE (BRIDGE DECK) (C.Y.)	EPOXY COATED REINFORCING STEEL (BRIDGES) (LBS.)	STEEL BAR REINFORCEMENT (BRIDGES) (LBS.)
1,220	313,450	8,250

◭4 ESTIMATED QUANTITIES PHASE IV CONSTRUCTION ◭1 ◭3

CLASS "D" CONCRETE (BRIDGE DECK) (C.Y.)	EPOXY COATED REINFORCING STEEL (BRIDGES) (LBS.)	STEEL BAR REINFORCEMENT (BRIDGES) (LBS.)
1,310	348,130	6,960

R. DARRELL JAMES REGISTERED ENGINEER NO. 15201 STATE OF TENNESSEE

04/04/2014

STATE OF TENNESSEE
DEPARTMENT OF TRANSPORTATION

SUPERSTRUCTURE

BRIDGE NO. 11-10040-05.63 (EB & WB)
INTERSTATE 40 OVER HARPETH RIVER
CHEATHAM COUNTY
2014

DESIGNED BY D. JAMES/D. THOMPSON DATE
DRAWN BY ANGELA MOORE DATE
SUPERVISED BY D. JAMES/D. THOMPSON DATE
CHECKED BY JAMIE GILLESPIE DATE

JAMES + ASSOCIATES, INC.

BR-113-28