CONST. NO.	BR-I-40-3(155)	
PROJECT NO.	YEAR	SHEET NO.
11003-3134-94	2014	

REVISIONS

NO.	DATE	BY	BRIEF DESCRIPTION
1	02-05-13	DWT	UPDATED ELEVATIONS AND QUANTITIES
2	04-26-13	DWT	REVISED ELASTOMERIC BEARING PAD
			STD. DWG. FROM STD-14-1 TO STD-14-3,
			SPAN 3 RISER BLOCKS AND BEARING PADS,
			BARS T550, DBL. SER. L652, DBL. SER.
			L653, AND DBL. SER. L654 QUANTITY, STEEL
			BAR REINFORCEMENT QUANTITY AND NOTE
3	11-06-13	DWT	ADDED ANCHOR BOLT EMBEDMENT LENGTH
4	11-15-13	DWT	REVISED QUANTITY FOR CLASS "A"
			CONCRETE AND STEEL BAR REINFORCEMENT

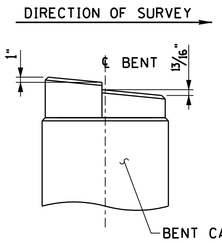

RISER BLOCK SLOPE DETAIL

NOTE: RISER BLOCK BEARING SURFACE TO CONFORM TO BOTTOM OF BEAM GRADE.

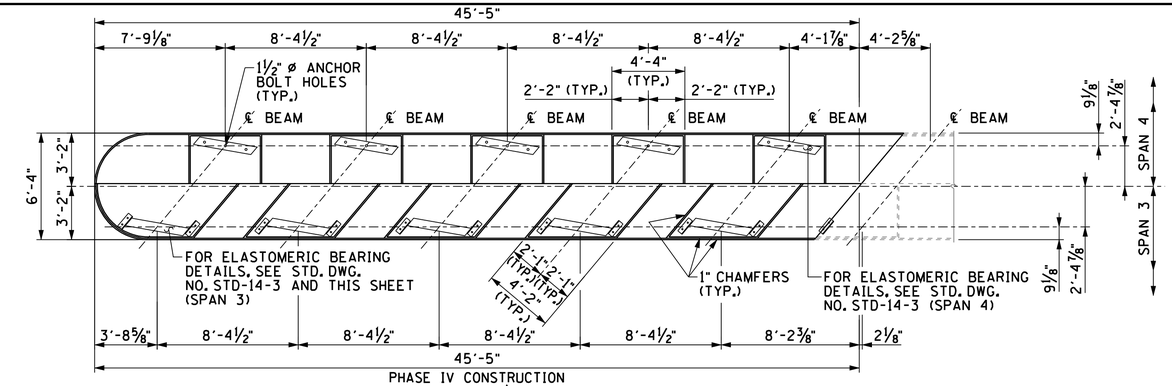

PHASE IV CONSTRUCTION

PLAN 2

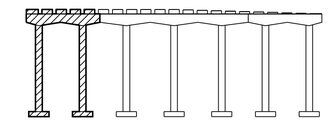

KEY

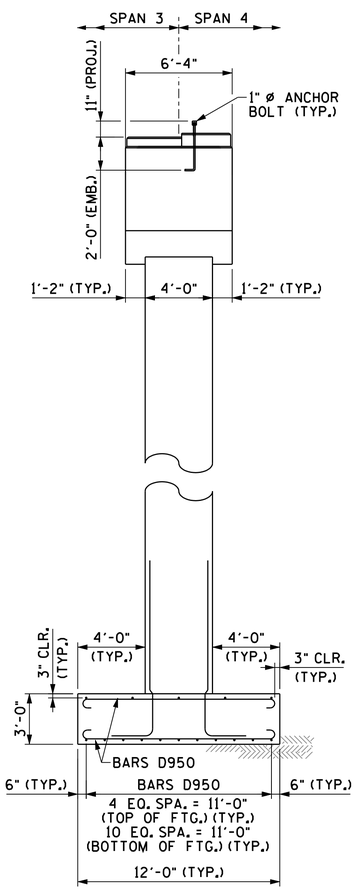

END ELEVATION

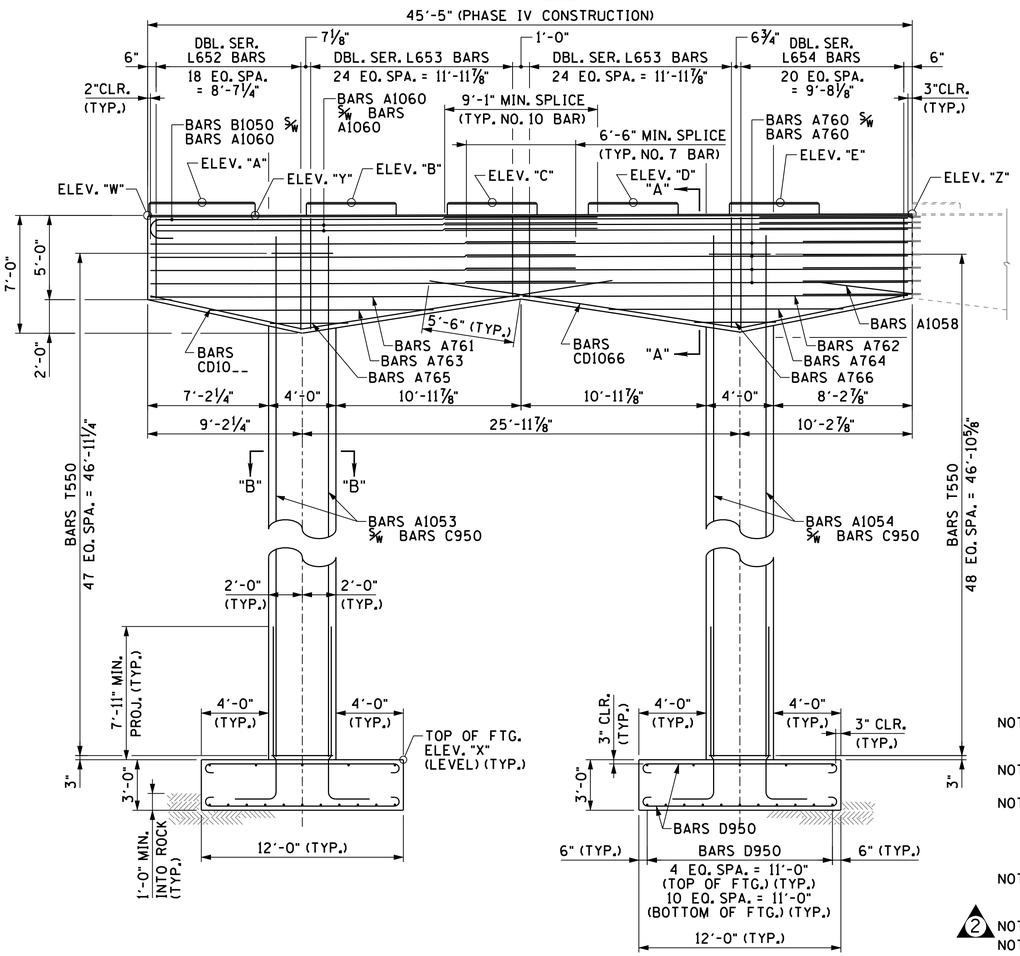

ELEVATION 2

(LOOKING FORWARD ON SURVEY)

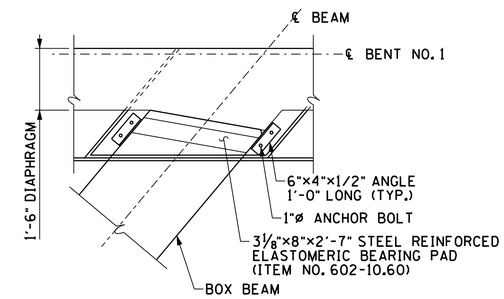

PLAN VIEW

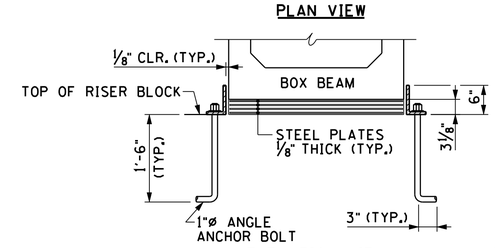

ELEVATION VIEW

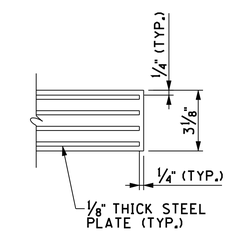

PARTIAL SECTION THRU STEEL REINFORCED ELASTOMERIC BEARING PAD

BEARING PAD AT BENT NO. 1 (SPAN 3) 2 3

(NOT TO SCALE)

NOTE: WHEN POURING CAP BEAM, PROVISIONS SHALL BE MADE FOR SETTING ANCHOR BOLTS. SEE STANDARD DRAWING STD-6-1. BOLT PROJECTION 11".

NOTE: RISER BLOCKS SHALL BE POURED MONOLITHICALLY WITH THE CAP BEAM.

NOTE: ELASTOMERIC PADS SHALL BE IN PLACE A MINIMUM OF ONE DAY BEFORE BEING DISTURBED BY SETTING BEAMS ON CONCRETE. PLACE RUBBER BONDING CEMENT IN SUCH A WAY THAT VISIBLE CONCRETE SURFACES WILL NOT BE STAINED.

NOTE: SEE SHEET BR-113-53 FOR SECTIONS "A-A" AND "B-B", PLAN OF FOOTING DETAIL, COUPLER DETAIL AND PLAN OF MAIN REINFORCEMENT.

2 NOTE: COLUMN STEEL TO EXTEND 5'-9" INTO CAP BEAM.

NOTE: RISER BLOCK BEARING PAD SURFACE TO CONFORM TO BOTTOM OF BEAM GRADE.

TABLE OF ELEVATIONS 1

LOCATION	EL. "A"	EL. "B"	EL. "C"	EL. "D"	EL. "E"	EL. "W"	EL. "X"	EL. "Y"	EL. "Z"
BENT NO. 1 (SPAN 3)	537.70	537.72	537.74	537.77	537.79	537.44	488.00	537.45	537.53
BENT NO. 1 (SPAN 4)	537.79	537.82	537.84	537.86	537.89	537.44	488.00	537.45	537.53

4 ESTIMATED QUANTITIES PHASE IV CONSTRUCTION 1 2

ITEM	CLASS "A" CONCRETE (BRIDGES) (C.Y.)	STEEL BAR REINFORCEMENT (BRIDGES) (LBS.)
BENT NO. 1	138	39,345

R. DARRELL JAMES REGISTERED ENGINEER NO. 15291 STATE OF TENNESSEE

04/04/2014

STATE OF TENNESSEE
DEPARTMENT OF TRANSPORTATION

BENT NO. 1
(PHASE IV - WESTBOUND)

BRIDGE NO. 11-10040-05.63 (EB & WB)
INTERSTATE 40 OVER HARPETH RIVER
CHEATHAM COUNTY
2014

DESIGNED BY D. JAMES/D. THOMPSON DATE
DRAWN BY ANGELA MOORE DATE
SUPERVISED BY D. JAMES/D. THOMPSON DATE
CHECKED BY JAMIE GILLESPIE DATE

JAMES & ASSOCIATES, INC.