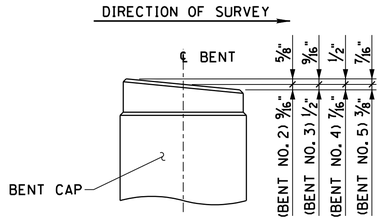

RISER BLOCK SLOPE DETAIL

NOTE: RISER BLOCK BEARING SURFACE TO CONFORM TO BOTTOM OF BEAM GRADE.

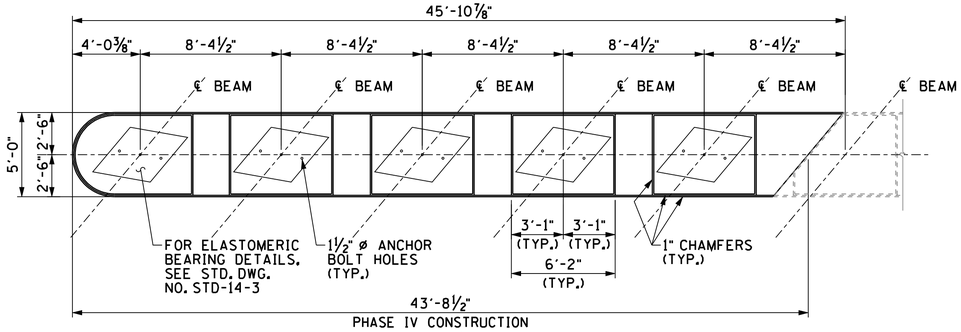

PLAN 2

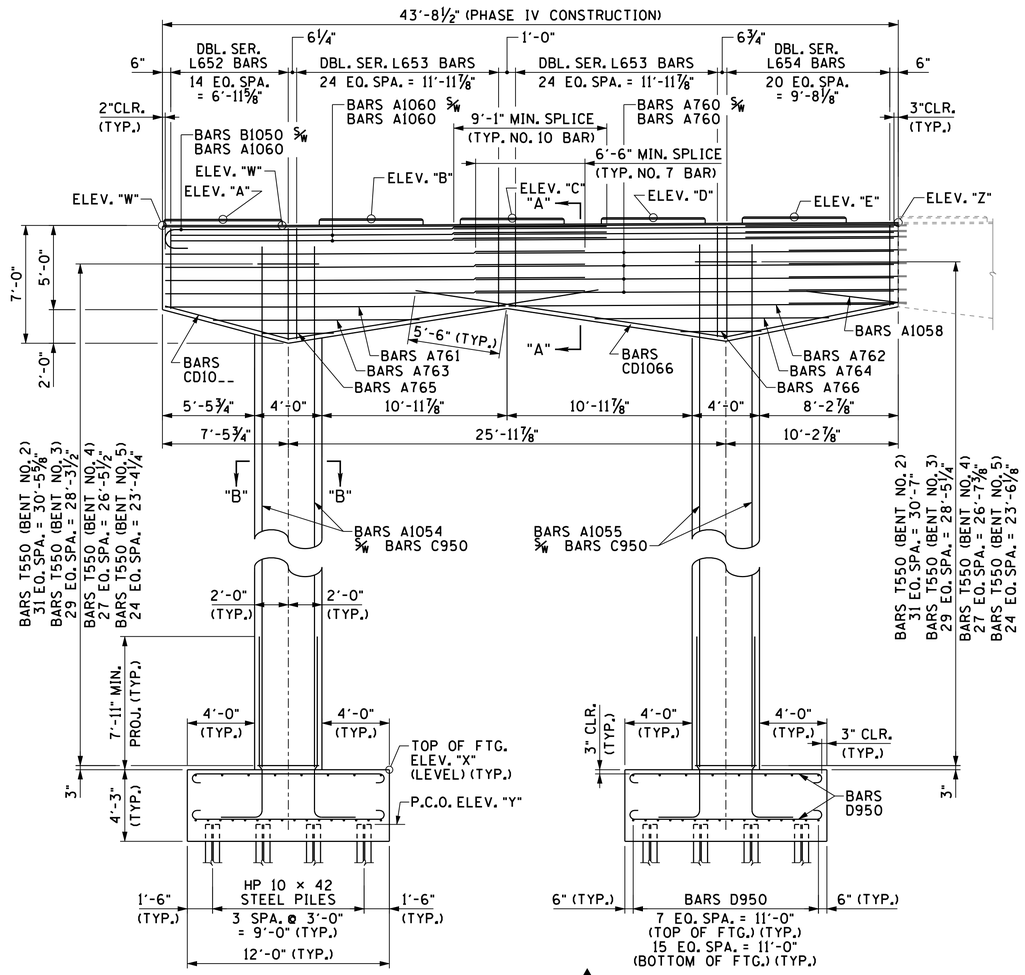

END ELEVATION

ELEVATION 2

(LOOKING FORWARD ON SURVEY)

CONST. NO. BR-I-40-3(155)

PROJECT NO.	YEAR	SHEET NO.
11003-3134-94	2014	

REVISIONS

NO.	DATE	BY	BRIEF DESCRIPTION
1	02-05-13	DWT	UPDATED ELEVATIONS AND QUANTITIES
2	04-26-13	DWT	REVISED ELASTOMERIC BEARING PAD
			STD. DWG. FROM STD-14-1 TO STD-14-3,
			REVISED BARS T550, DBL. SER. L652,
			DBL. SER. L653, AND DBL. SER. L654
			QUANTITY, STEEL BAR REINFORCEMENT
			QUANTITY AND NOTE
3	11-15-13	DWT	REVISED QUANTITY FOR CLASS "A"
			CONCRETE AND STEEL BAR REINFORCEMENT

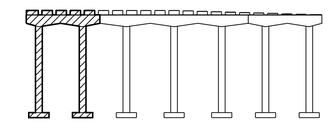

KEY

3 ESTIMATED QUANTITIES PHASE IV CONSTRUCTION 1 2

ITEM	CLASS "A" CONCRETE (BRIDGES) (C.Y.)	STEEL BAR REINFORCEMENT (BRIDGES) (LBS.)
BENT NO. 2	120	34,850
BENT NO. 3	119	34,335
BENT NO. 4	116	33,825
BENT NO. 5	114	33,030

NOTE: WHEN POURING CAP BEAM, PROVISIONS SHALL BE MADE FOR SETTING ANCHOR BOLTS. SEE STANDARD DRAWING STD-6-1. BOLT PROJECTION 11".

NOTE: RISER BLOCKS SHALL BE POURED MONOLITHICALLY WITH THE CAP BEAM.

NOTE: ELASTOMERIC PADS SHALL BE IN PLACE A MINIMUM OF ONE DAY BEFORE BEING DISTURBED BY SETTING BEAMS ON CONCRETE. PLACE RUBBER BONDING CEMENT IN SUCH A WAY THAT VISIBLE CONCRETE SURFACES WILL NOT BE STAINED.

NOTE: SEE SHEET BR-113-57 FOR SECTIONS "A-A" AND "B-B", PLAN OF FOOTING DETAIL, COUPLER DETAIL AND PLAN OF MAIN REINFORCEMENT.

2 NOTE: COLUMN STEEL TO EXTEND 5'-9" INTO CAP BEAM.

NOTE: RISER BLOCK BEARING PAD SURFACE TO CONFORM TO BOTTOM OF BEAM GRADE.

TABLE OF ELEVATIONS 1

LOCATION	EL. "A"	EL. "B"	EL. "C"	EL. "D"	EL. "E"	EL. "W"	EL. "X"	EL. "Y"	EL. "Z"
BENT NO. 2	536.43	536.46	536.50	536.53	536.57	536.07	503.00	499.75	536.24
BENT NO. 3	535.18	535.23	535.27	535.32	535.36	534.91	504.00	500.75	535.08
BENT NO. 4	534.27	534.32	534.37	534.43	534.48	534.06	505.00	501.75	534.23
BENT NO. 5	533.14	533.20	533.27	533.34	533.40	532.99	507.00	503.75	533.16

R. DARRELL JAMES REGISTERED ENGINEER NO. 16281 STATE OF TENNESSEE

04/04/2014

STATE OF TENNESSEE
DEPARTMENT OF TRANSPORTATION

BENT NOS. 2 THRU 5
(PHASE IV - WESTBOUND)

BRIDGE NO. 11-10040-05.63 (EB & WB)
INTERSTATE 40 OVER HARPETH RIVER
CHEATHAM COUNTY
2014

DESIGNED BY D. JAMES/D. THOMPSON DATE
DRAWN BY ANGELA MOORE DATE
SUPERVISED BY D. JAMES/D. THOMPSON DATE
CHECKED BY JAMIE GILLESPIE DATE

JAMES & ASSOCIATES, INC.