TYPE	YEAR	PROJECT NO.	SHEET NO.
CONST.	2014	NH-I-40-1(283)20	

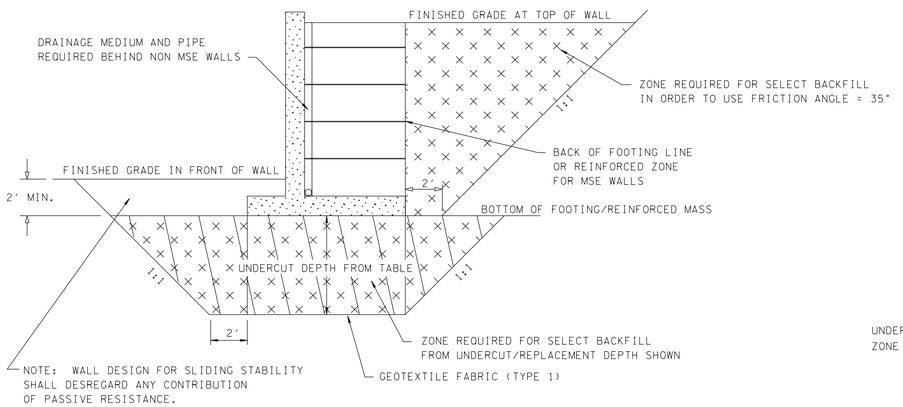

UNDERCUTTING AND REPLACEMENT

GRAVITY WALL
CIP CANTILEVER WALL
MSE WALL (SEGMENTAL PRECAST OR MODULAR BLOCK)

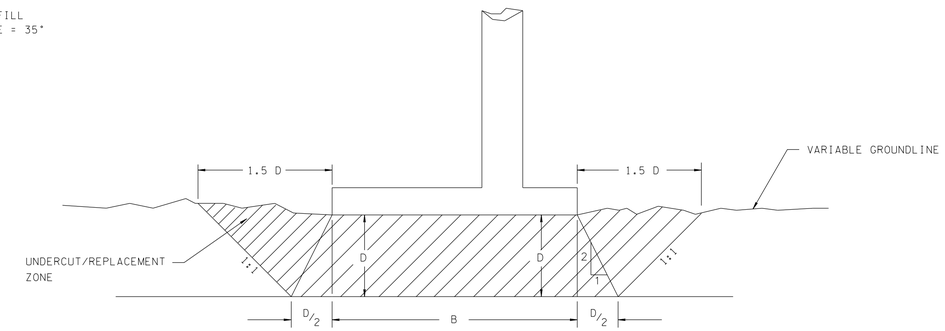

SCHEMATIC FOR UNDERCUT/REPLACEMENT - WHERE REQUIRED

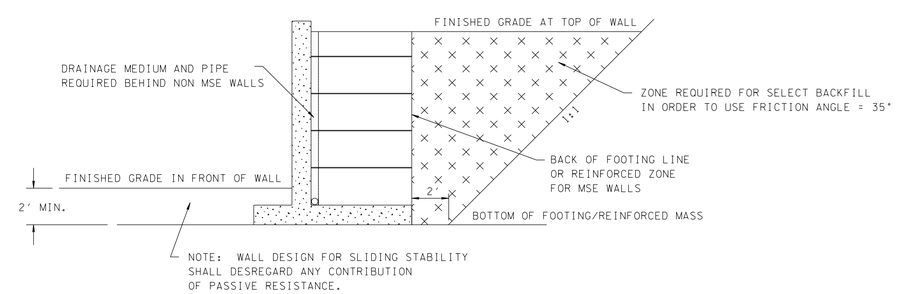

FOUNDATION ON SOIL

GRAVITY WALL
CIP CANTILEVER WALL
MSE WALL (SEGMENTAL PRECAST OR MODULAR BLOCK)

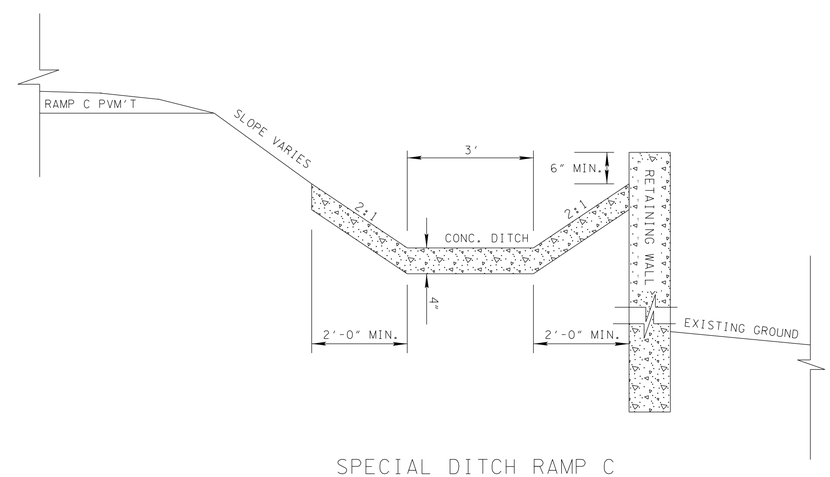

SPECIAL DITCH RAMP C
RETAINING WALL NO. 2
N.T.S.

SEALED BY

STATE OF TENNESSEE
DEPARTMENT OF TRANSPORTATION

RETAINING WALL
NO. 2
CANADA RD RAMP C (RT)

WALL STA. 10+00 TO STA. 13+05.57

M-441-319

3/12/2014 11:52:54 AM
P:\Structdrop\Drop\108?\Shlke\2D RetainingWallRampC Details.SHT