TYPE	YEAR	PROJECT NO.	SHEET NO.
CONST.	2014	NH-I-40-1(283)20	

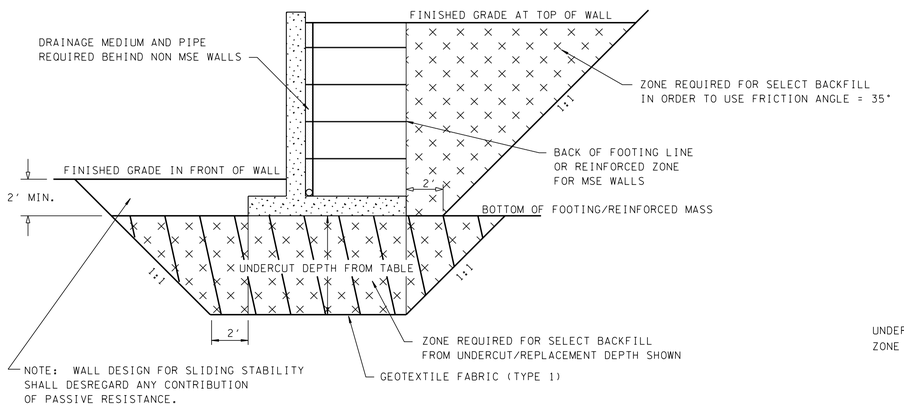

UNDERCUTTING AND REPLACEMENT

GRAVITY WALL
CIP CANTILEVER WALL
MSE WALL (SEGMENTAL PRECAST OR MODULAR BLOCK)

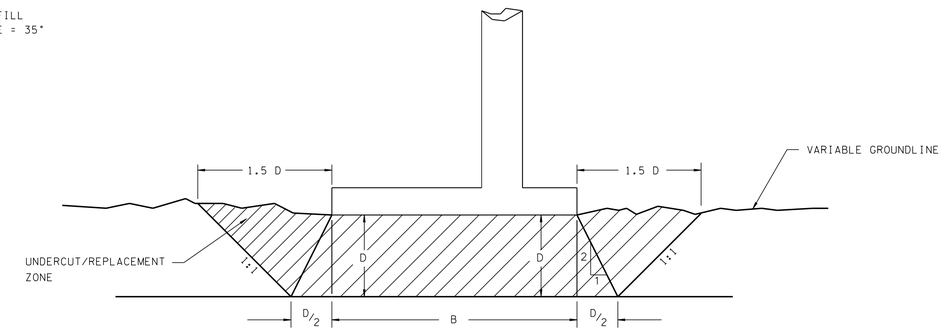

SCHEMATIC FOR UNDERCUT/REPLACEMENT - WHERE REQUIRED

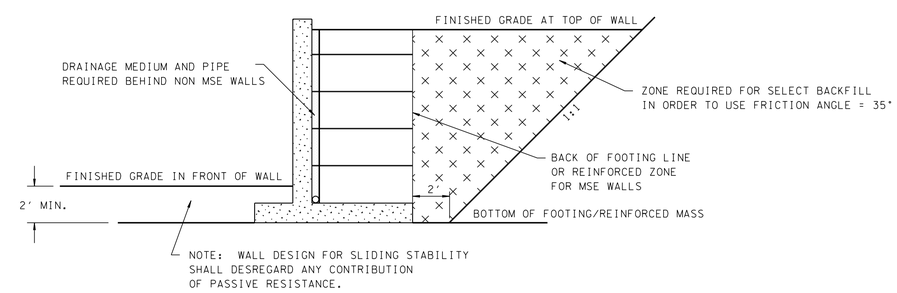

FOUNDATION ON SOIL

GRAVITY WALL
CIP CANTILEVER WALL
MSE WALL (SEGMENTAL PRECAST OR MODULAR BLOCK)

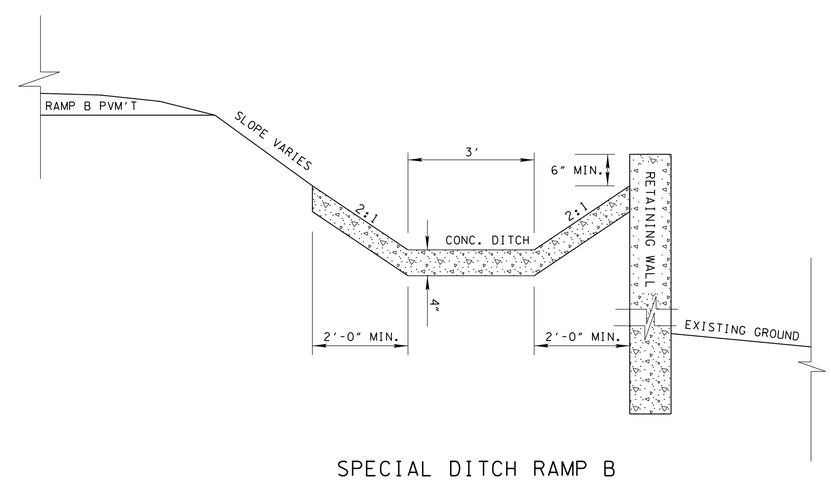

SPECIAL DITCH RAMP B
RETAINING WALL NO. 1
N.T.S.

SEALED BY

STATE OF TENNESSEE
DEPARTMENT OF TRANSPORTATION

RETAINING WALL
NO. 1
CANADA RD RAMP B (RT)

WALL STA. 10+00 TO STA. 12+27.91

M-441-315

3/12/2014 11:48:21 AM
P:\Structdrop\Drop\1087\Shlke\ID RetainingWallRampB Details.SHT