TYPE	YEAR	PROJECT NO.	SHEET NO.
CONST.	2014	NH-I-40-1(283)20	

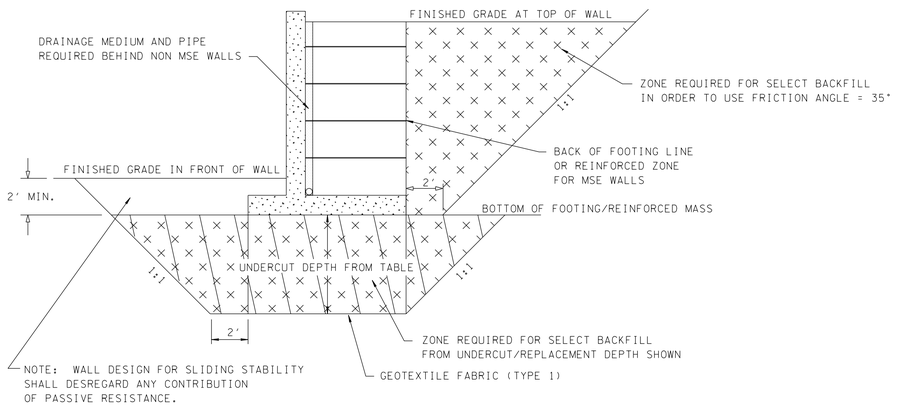

UNDERCUTTING AND REPLACEMENT

GRAVITY WALL
CIP CANTILEVER WALL
MSE WALL (SEGMENTAL PRECAST OR MODULAR BLOCK)

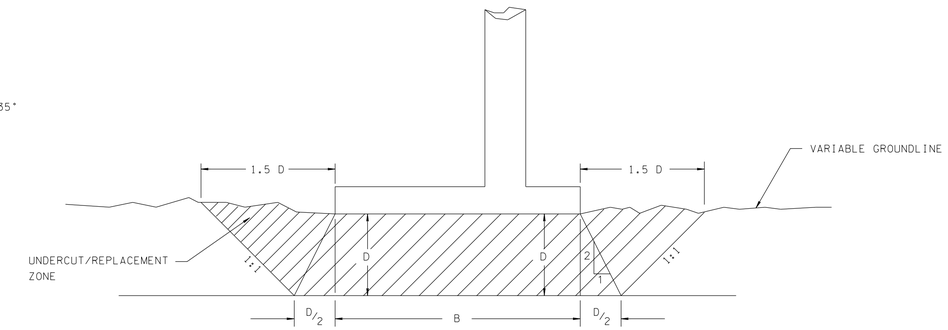

SCHEMATIC FOR UNDERCUT/REPLACEMENT - WHERE REQUIRED

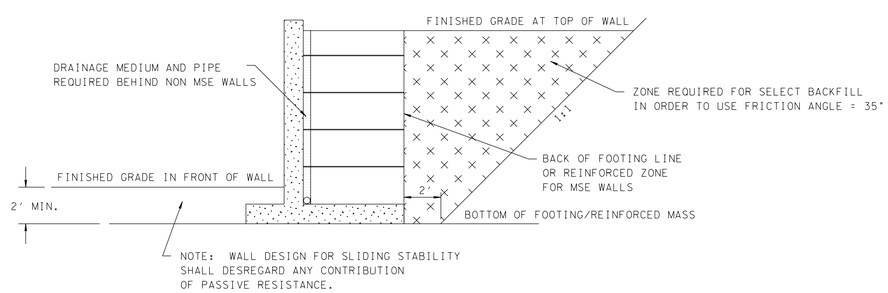

FOUNDATION ON SOIL

GRAVITY WALL
CIP CANTILEVER WALL
MSE WALL (SEGMENTAL PRECAST OR MODULAR BLOCK)

SEALED BY

STATE OF TENNESSEE
DEPARTMENT OF TRANSPORTATION

RETAINING WALL
NO. 3
CANADA RD RAMP D (RT)

WALL STA. 10+00 TO STA. 11+50.74

M-441-323

3/12/2014 11:57:02 AM
P:\Structdrop\Drop\1087\Shike\3D RetainingWallRampD Details.SHT