TYPE	YEAR	PROJECT NO.	SHEET NO.
CONST.	2014	NH-I-40-1(283)20	57

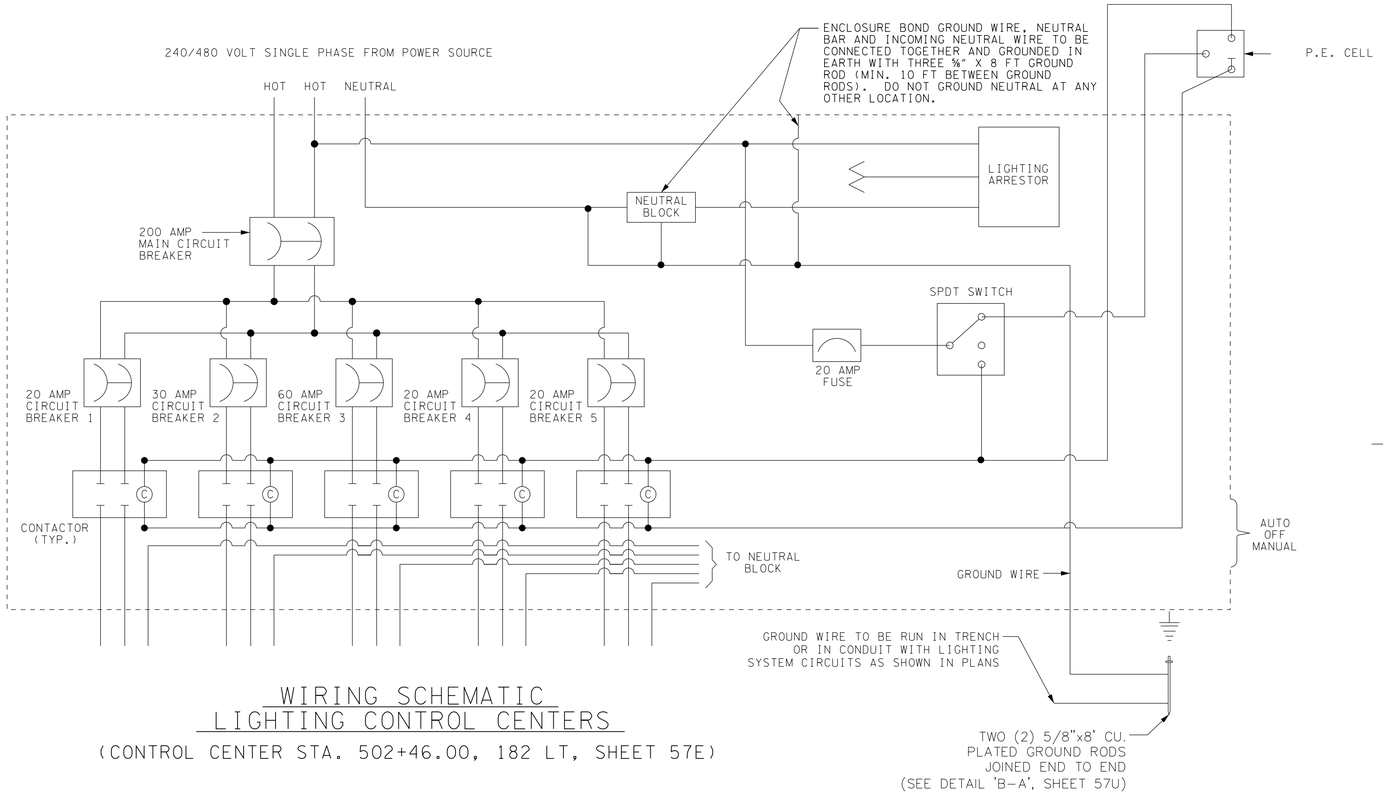

WIRING SCHEMATIC
LIGHTING CONTROL CENTERS

(CONTROL CENTER STA. 502+46.00, 182 LT, SHEET 57E)

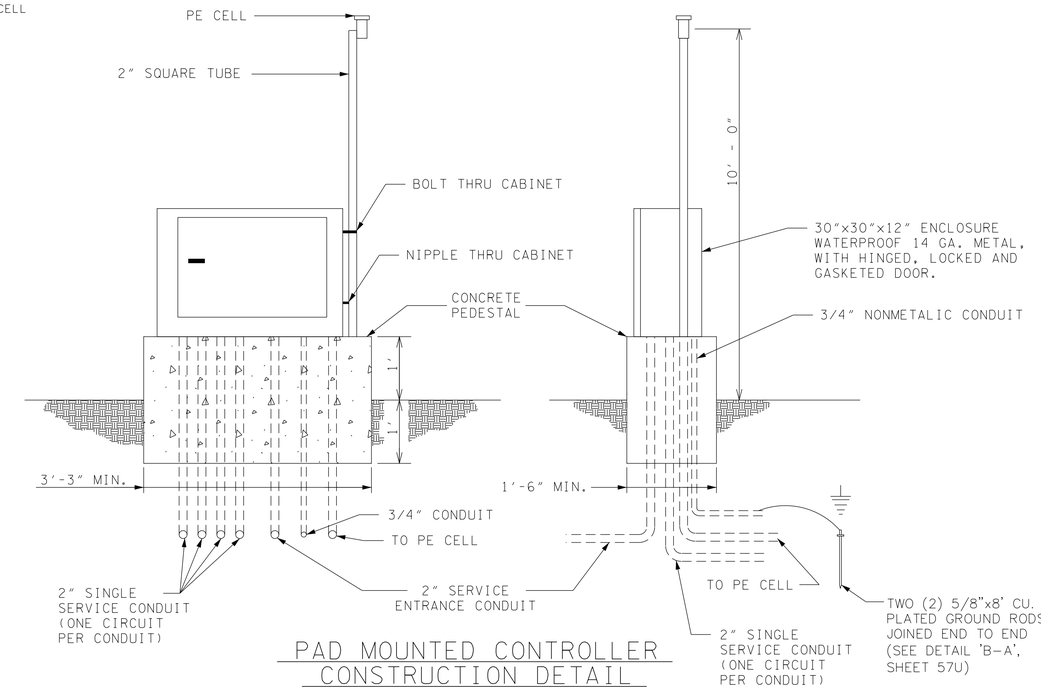

PAD MOUNTED CONTROLLER
CONSTRUCTION DETAIL

N.T.S

CONTROL CENTER NOTES

1. CONTRACTOR IS RESPONSIBLE FOR ALL MATERIAL AND INSTALLATION UP TO AND INCLUDING WEATHERHEAD.
2. CONTRACTOR SHALL INSTALL A 200 AMP DISCONNECT FOR EACH CONTROL CENTER AS DIRECTED BY THE ENGINEER AND MLGW.
3. CONTRACTOR TO COORDINATE FINAL LOCATION OF CONTROL CENTERS WITH MLGW AND THE ENGINEER.
4. FOR ELECTRICAL SERVICE CONNECTION, CONTACT, DEBRA HIGGINS, OF MLGW, (901) 528-4011. CHEW SHANNON MAY ALSO BE CONTACTED FOR POWER SERVICE REQUIREMENTS AND COST.
5. LIGHTING SYSTEM SHALL BE 240/480 VOLT SINGLE PHASE SERVICE. LUMINAIRES SHALL HAVE 240 VOLT OPERATION.
6. CONTRACTOR SHALL BALANCE LOADS ON EACH CIRCUIT.
7. THE CONTROL CENTER SHALL BE ENCLOSED BY A CHAIN LINK FENCE AS SHOWN IN DETAIL 'A'.
8. THE CONTROL CENTER CABINET DOOR SHALL FACE AND OPEN TOWARDS THE ROADWAY.
9. THE PHOTO ELECTRIC CELL SHALL BE LOCATED AT THE CONTROL CENTER.

FENCE ENCLOSURE NOTES

10. THE FENCE ENCLSOURE SHALL BE CONSTRUCTED SO THAT THE CONTROL CENTER IS CENTERED WITHIN THE ENCLOSURE.
11. THE GATE OPENING SHALL FACE AND OPEN TOWARDS THE ROADWAY.

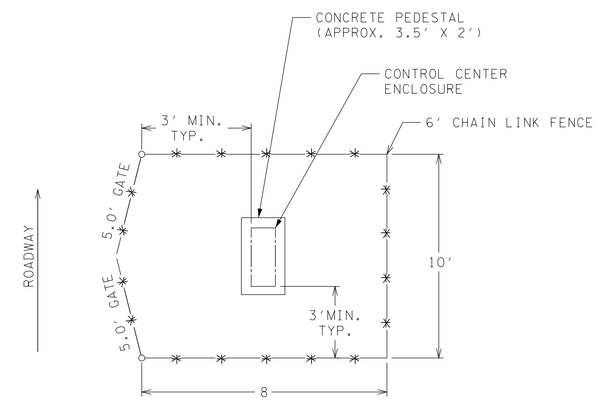

ESTIMATED FENCE & GATE QUANTITIES:

CHAIN LINK FENCE 6 FT. HT. W/ 3 STRANDS
BARB WIRE 36 FT.
CHAIN LINK GATE 6 FT. HT. 5 L.F.

FENCE ENCLOSURE FOR CONTROL CENTER
DETAIL 'A'

N.T.S

SEALED BY

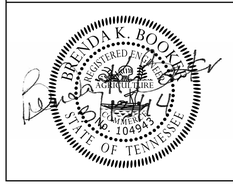

STATE OF TENNESSEE
DEPARTMENT OF TRANSPORTATION

CONTROL CENTER DETAILS

SCALE: NONE

3/13/2014 2:04:53 PM
C:\Users\BE-Bea\Desktop\Booker\01-ACTIVE\TDOT\E1616\SHELBY\04-I-40 AT CANADA RD LIGHTING\05-FINAL CONST DGN FILES\057.SHT

TYPE	YEAR	PROJECT NO.	SHEET NO.
CONST.	2014	NH-I-40-1(283)20	57A

ROADWAY LIGHT POLE SCHEDULE

	LIGHT POLE NO.	SHEET NO.	LAMP WATTAGE (HPS)	VOLTAGE	LUMINAIRE TYPE	NO. OF LAMPS	CONTROL CENTER NO.	CIRCUIT NO.	MOUNTING HEIGHT (FT)	BASELINE	STATION	OFFSET (FT)	SIDE
(1)	LP 1	57F	250	240/480	A	2	1	5	-45	I-40	469+90	0.0	NA
(1)	LP 2	57F	250	240/480	A	2	1	5	-45	I-40	472+35	0.0	NA
(1)	LP 3	57F	250	240/480	A	2	1	5	-45	I-40	474+80	0.0	NA
(1)	LP 4	57F	250	240/480	A	2	1	5	-45	I-40	477+25	0.0	NA
(1)	LP 5	57F	250	240/480	A	2	1	5	-45	I-40	479+65	0.0	NA
(1)	LP 6	57F	250	240/480	A	2	1	5	-45	I-40	482+05	0.0	NA
(1)	LP 7	57E	250	240/480	A	2	1	5	-45	I-40	484+45	0.0	NA
(1)	LP 8	57E	250	240/480	A	2	1	5	-45	I-40	486+70	0.0	NA
(4)	LP 9	57E	250	240/480	A	2	1	5	+45	I-40	488+85	MEDIAN BARRIER	NA
(4)	LP 10	57E	250	240/480	A	2	1	5	+45	I-40	491+45	MEDIAN BARRIER	NA
(4)	LP 11	57E	250	240/480	A	2	1	5	+45	I-40	494+05	MEDIAN BARRIER	NA
(4)	LP 12	57E	250	240/480	A	2	1	5	+45	I-40	496+65	MEDIAN BARRIER	NA
(4)	LP 13	57E	250	240/480	A	2	1	1	+45	I-40	499+45	MEDIAN BARRIER	NA
(4)	LP 14	57E	250	240/480	A	2	1	1	+45	I-40	502+05	MEDIAN BARRIER	NA
(4)	LP 15	57E	250	240/480	A	2	1	1	+45	I-40	504+65	MEDIAN BARRIER	NA
(4)	LP 16	57E	250	240/480	A	2	1	1	+45	I-40	507+05	MEDIAN BARRIER	NA
(1)	LP 17	57E	250	240/480	A	2	1	1	-45	I-40	509+40	0.0	NA
(1)	LP 18	57E	250	240/480	A	2	1	1	-45	I-40	511+80	0.0	NA
(1)	LP 19	57F	250	240/480	A	2	1	1	-45	I-40	514+20	0.0	NA
(1)	LP 20	57F	250	240/480	A	2	1	1	-45	I-40	516+75	0.0	NA
(2)	LP 21	57F	250	240/480	B	1	1	4	45	I-40	471+12.5	80.0	RT
(2)	LP 22	57F	250	240/480	B	1	1	4	45	I-40	473+57.5	80.0	RT
(2)	LP 23	57F	250	240/480	B	1	1	4	45	I-40	476+02.5	86.5	RT
(2)	LP 24	57F	250	240/480	B	1	1	4	45	I-40	478+45.5	91.3	RT
	LP 25	57F	250	240/480	B	1	1	4	45	RAMP AX	16+65	21.4	RT
	LP 26	57E	250	240/480	B	1	1	4	45	RAMP AX	19+05	20.0	RT
	LP 27	57E	250	240/480	B	1	1	4	45	RAMP AX	21+40	20.0	RT
	LP 28	57E	250	240/480	B	1	1	4	45	RAMP AX	23+58	22.1	RT
	LP 29	57E	250	240/480	B	1	1	4	45	RAMP AX	25+35	26.1	RT
	LP 30	57E	250	240/480	B	1	1	4	45	RAMP AX	27+50	43.2	RT
	LP 31	57E	250	240/480	B	1	1	4	45	RAMP AX	29+30	54.2	RT
	LP 32	57E	250	240/480	B	1	1	4	45	RAMP A2	31+40	27.1	RT
	LP 33	57E	250	240/480	B	1	1	4	45	RAMP A1	32+14.5	34.0	RT
	LP 34	57E	250	240/480	B	1	1	4	45	CANADA RD	211+55	53.0	LT
	LP 35	57E	250	240/480	B	1	1	4	45	CANADA RD	209+05	52.4	LT
	LP 36	57E	250	240/480	B	1	1	4	45	CANADA RD	207+35	75.1	LT
	LP 37	57E	250	240/480	B	1	1	4	45	CANADA RD	205+50	71.5	LT
	LP 38	57E	250	240/480	B	1	1	4	45	CANADA RD	203+70	70.8	LT
	LP 39	57G	250	240/480	B	1	1	4	45	CANADA RD	201+75	66.9	LT
	LP 40	57G	250	240/480	B	1	1	4	45	CANADA RD	199+65	61.6	LT
	LP 41	57G	250	240/480	B	1	1	4	45	CANADA RD	197+65	56.6	LT
	LP 42	57G	250	240/480	B	1	1	4	45	CANADA RD	195+55	51.4	LT
	LP 43	57G	250	240/480	B	1	1	4	45	CANADA RD	193+65	58.0	LT
	LP 44	57G	250	240/480	B	1	1	2	45	CANADA RD	194+55	58.7	RT
	LP 45	57G	250	240/480	B	1	1	2	45	CANADA RD	196+60	51.0	RT
	LP 46	57G	250	240/480	B	1	1	2	45	CANADA RD	198+75	51.0	RT
	LP 47	57G	250	240/480	B	1	1	2	45	CANADA RD	200+80	51.0	RT
	LP 48	57E	250	240/480	B	1	1	2	45	CANADA RD	202+80	63.1	RT
	LP 49	57E	250	240/480	B	1	1	2	45	CANADA RD	204+65	65.0	RT
	LP 50	57E	250	240/480	B	1	1	2	45	CANADA RD	206+45	67.0	RT
	LP 51	57E	250	240/480	B	1	1	2	45	CANADA RD	208+25	63.0	RT
	LP 52	57E	250	240/480	B	1	1	2	45	CANADA RD	210+00	53.0	RT
	LP 53	57E	250	240/480	B	1	1	2	45	CANADA RD	211+55	53.0	RT
	LP 54	57E	250	240/480	B	1	1	2	45	RAMP B1	12+89	26.5	RT
	LP 55	57E	250	240/480	B	1	1	2	45	RAMP B	14+65	15.4	RT
	LP 56	57E	250	240/480	B	1	1	2	45	RAMP BX	16+35	10.0	RT
	LP 57	57E	250	240/480	B	1	1	2	45	RAMP BX	18+10	10.0	RT
	LP 58	57E	250	240/480	B	1	1	2	45	RAMP BX	20+16	20.0	RT
	LP 59	57E	250	240/480	B	1	1	2	45	RAMP BX	22+20	20.0	RT
	LP 60	57E	250	240/480	B	1	1	2	45	RAMP BX	24+64	20.0	RT

A = DOUBLE ROADWAY LUMINAIRE (COBRAHEAD)
B = SINGLE ROADWAY LUMINAIRE (COBRAHEAD)
C = UNDERPASS LUMINAIRE

(1) MOUNTING HEIGHT WILL BE LESS THAN 45' DUE TO INSTALLATION IN DEPRESSED MEDIAN.
(2) LOCATED FOR FUTURE WIDENING, SEE SHEET 57H.
(3) LUMINAIRE AND ARM TO BE INSTALLED ON SIGNAL POLE.
(4) MOUNTING HEIGHT WILL BE GREATER THAN 45' DUE TO INSTALLATION ON WALL.

SEALED BY

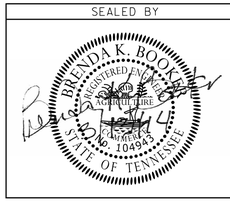

STATE OF TENNESSEE
DEPARTMENT OF TRANSPORTATION

LIGHTING DETAILS

(POLE DATA)

3/13/2014 3:24:55 PM
C:\Users\BE-Beq\Desktop\Booker\01_ACTIVE\TDOT\E1616\SHELBY\04_I-40 AT CANADA RD LIGHTING\05_FINAL CONST DGN FILES\057A.SHT

TYPE	YEAR	PROJECT NO.	SHEET NO.
CONST.	2014	NH-I-40-1(283)20	57B

ROADWAY LIGHT POLE SCHEDULE

	LIGHT POLE NO.	SHEET NO.	LAMP WATTAGE (HPS)	VOLTAGE	LUMINAIRE TYPE	NO. OF LAMPS	CONTROL CENTER NO.	CIRCUIT NO.	MOUNTING HEIGHT (FT)	BASELINE	STATION	OFFSET (FT)	SIDE
	LP 61	57F	250	240/480	B	1	1	2	45	RAMP BX	27+03	20.3	RT
(2)	LP 62	57F	250	240/480	B	1	1	2	45	RAMP BX	29+53	23.9	RT
(2)	LP 63	57F	250	240/480	B	1	1	2	45	I-40	518+10	80.0	RT
(2)	LP 64	57F	250	240/480	B	1	1	3	45	RAMP DX	39+21	29.6	RT
(2)	LP 65	57F	250	240/480	B	1	1	3	45	RAMP DX	36+76	28.1	RT
	LP 66	57F	250	240/480	B	1	1	3	45	RAMP DX	34+32	20.0	RT
	LP 67	57F	250	240/480	B	1	1	3	45	RAMP DX	31+89	20.0	RT
	LP 68	57F	250	240/480	B	1	1	3	45	RAMP DX	29+50	20.1	RT
	LP 69	57E	250	240/480	B	1	1	3	45	RAMP DX	27+09	24.5	RT
	LP 70	57E	250	240/480	B	1	1	3	45	RAMP DX	24+88	28.5	RT
	LP 71	57E	250	240/480	B	1	1	3	45	RAMP DX	22+51	32.0	RT
(4)	LP 72	57E	250	240/480	B	1	1	3	+45	RAMP DX	20+55	BARRIER WALL	RT
	LP 73	57E	250	240/480	B	1	1	3	45	RAMP DX	18+54	22.0	RT
	LP 74	57E	250	240/480	B	1	1	3	45	RAMP DX	16+60	22.0	RT
	LP 75	57E	250	240/480	B	1	1	3	45	RAMP D1	14+55	26.0	RT
	LP 76	57E	250	240/480	B	1	1	3	45	RAMP D1	12+55	26.2	RT
	LP 77	57E	250	240/480	B	1	1	3	45	CANADA RD	214+35	53.0	LT
	LP 78	57E	250	240/480	B	1	1	3	45	CANADA RD	216+25	53.0	LT
	LP 79	57E	250	240/480	B	1	1	3	45	CANADA RD	218+10	63.0	LT
	LP 80	57E	250	240/480	B	1	1	3	45	CANADA RD	220+15	56.0	LT
	LP 81	57G	250	240/480	B	1	1	3	45	CANADA RD	222+10	53.0	LT
(3)	LP 82	57G	250	240/480	B	1	1	3	37	CANADA RD	224+03	ON SIGNAL POLE	LT
	LP 83	57G	250	240/480	B	1	1	3	45	CANADA RD	226+10	45.5	LT
	LP 84	57G	250	240/480	B	1	1	3	45	CANADA RD	225+15	45.5	RT
(3)	LP 85	57G	250	240/480	B	1	1	3	37	CANADA RD	223+18.5	ON SIGNAL POLE	RT
	LP 86	57E	250	240/480	B	1	1	3	45	CANADA RD	221+20	56.0	RT
	LP 87	57E	250	240/480	B	1	1	3	45	CANADA RD	219+15	59.0	RT
	LP 88	57E	250	240/480	B	1	1	3	45	RAMP C1	28+45	27.0	RT
	LP 89	57E	250	240/480	B	1	1	3	45	CANADA RD	215+15	53.0	RT
	LP 90	57E	250	240/480	B	1	1	3	45	RAMP C1	26+76	28.0	RT
	LP 91	57E	250	240/480	B	1	1	2	45	RAMP CX	22+94	12.0	RT
	LP 92	57E	250	240/480	B	1	1	2	45	RAMP CX	20+69	20.0	RT
	LP 93	57E	250	240/480	B	1	1	2	45	RAMP CX	18+45	20.0	RT
(2)	LP 94	57E	250	240/480	B	1	1	2	45	RAMP CX	16+06	31.8	RT
(2)	LP 95	57F	250	240/480	B	1	1	2	45	I-40	513+00	95.9	LT
(2)	LP 96	57F	250	240/480	B	1	1	2	45	I-40	515+50	82.5	LT
(2)	LP 97	57F	250	240/480	B	1	1	2	45	I-40	518+10	80.0	LT
(4)	LP 98	57E	250	240/480	B	1	1	3	+45	I-40	490+15	BARRIER WALL	RT
(4)	LP 99	57E	250	240/480	B	1	1	3	+45	I-40	492+75	BARRIER WALL	RT
(4)	LP 100	57E	250	240/480	B	1	1	3	+45	I-40	495+35	BARRIER WALL	RT
(4)	LP 101	57E	250	240/480	B	1	1	3	+45	I-40	500+75	BARRIER WALL	RT
(4)	LP 102	57E	250	240/480	B	1	1	3	+45	I-40	503+35	BARRIER WALL	RT
(4)	LP 103	57E	250	240/480	B	1	1	1	+45	I-40	490+15	BARRIER WALL	LT
(4)	LP 104	57E	250	240/480	B	1	1	1	+45	I-40	492+75	BARRIER WALL	LT
(4)	LP 105	57E	250	240/480	B	1	1	1	+45	I-40	495+35	BARRIER WALL	LT
(4)	LP 106	57E	250	240/480	B	1	1	1	+45	I-40	500+75	BARRIER WALL	LT
(4)	LP 107	57E	250	240/480	B	1	1	1	+45	I-40	503+35	BARRIER WALL	LT
(4)	LP 108	57E	250	240/480	B	1	1	1	+45	I-40	505+85	BARRIER WALL	LT
	LP 109	57E	250	240/480	B	1	1	3	45	RAMP AX	26+60	28.6	LT
	LP 110	57E	250	240/480	B	1	1	3	45	RAMP AX	28+40	35.7	LT
	LP 111	57E	250	240/480	B	1	1	3	45	RAMP A	30+25	37.9	LT
	LP 112	57E	250	240/480	B	1	1	3	45	RAMP A	31+95	34.1	LT
(3)	LP 113	57E	250	240/480	B	1	1	3	37	CANADA RD	212+85.5	ON SIGNAL POLE	LT
	LP 114	57E	250	240/480	B	1	1	3	45	RAMP DX	13+40	36.4	LT
	LP 115	57E	250	240/480	B	1	1	3	45	RAMP B	13+15	34.6	LT
(3)	LP 116	57E	250	240/480	B	1	1	3	37	CANADA RD	213+13	ON SIGNAL POLE	RT
	LP 117	57E	250	240/480	B	1	1	3	45	RAMP CX	27+09	33.7	LT
	LP 118	57E	250	240/480	B	1	1	3	45	RAMP CX	24+89	38.0	LT

A = DOUBLE ROADWAY LUMINAIRE (COBRAHEAD)
B = SINGLE ROADWAY LUMINAIRE (COBRAHEAD)
C = UNDERPASS LUMINAIRE

(1) MOUNTING HEIGHT WILL BE LESS THAN 45' DUE TO INSTALLATION IN DEPRESSED MEDIAN.
(2) LOCATED FOR FUTURE WIDENING, SEE SHEET 57H.
(3) LUMINAIRE AND ARM TO BE INSTALLED ON SIGNAL POLE.
(4) MOUNTING HEIGHT WILL BE GREATER THAN 45' DUE TO INSTALLATION ON WALL.

SEALED BY

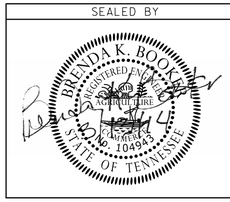

STATE OF TENNESSEE
DEPARTMENT OF TRANSPORTATION

LIGHTING DETAILS

(POLE DATA)

3/13/2014 2:08:19 PM
C:\Users\BE-Beo\Desktop\Booker\01_ACTIVE\TDOT\E1616\SHELBY\04_I-40 AT CANADA RD LIGHTING\05_FINAL CONST DGN FILES\057B.SHT

TYPE	YEAR	PROJECT NO.	SHEET NO.
CONST.	2014	NH-I-40-1(283)20	57C

UNDERPASS LUMINAIRE SCHEDULE

HIGH MAST POLE NO.	SHEET NO.	LAMP WATTAGE (HPS)	VOLTAGE	LUMINAIRE TYPE	NO. OF LAMPS	CONTROL CENTER NO.	CIRCUIT NO.	MOUNTING HEIGHT (FT)	BASELINE	STATION	OFFSET (FT)	SIDE
UPL 1	57E	150	240/480	C	1	1	3	17	I-40	498+93	ON BRIDGE WALL	LT
UPL 2	57E	150	240/480	C	1	1	3	17	I-40	498+30	ON BRIDGE WALL	LT
UPL 3	57E	150	240/480	C	1	1	3	17	I-40	497+65	ON BRIDGE WALL	LT
UPL 4	57E	150	240/480	C	1	1	3	17	I-40	498+51	ON BRIDGE WALL	RT
UPL 5	57E	150	240/480	C	1	1	3	17	I-40	497+77	ON BRIDGE WALL	RT
UPL 6	57E	150	240/480	C	1	1	3	17	I-40	497+00	ON BRIDGE WALL	RT

A = DOUBLE ROADWAY LUMINAIRE (COBRAHEAD)
B = SINGLE ROADWAY LUMINAIRE (COBRAHEAD)
C = UNDERPASS LUMINAIRE

(1) MOUNTING HEIGHT WILL BE LESS THAN 45' DUE TO INSTALLATION IN DEPRESSED MEDIAN.
(2) LOCATED FOR FUTURE WIDENING, SEE SHEET 57H.
(3) LUMINAIRE AND ARM TO BE INSTALLED ON SIGNAL POLE.
(4) MOUNTING HEIGHT WILL BE GREATER THAN 45' DUE TO INSTALLATION ON WALL.

LIGHTING NOTES

(1) INSTALLATION AND MATERIALS SHALL COMPLY WITH SECTIONS 714 AND 917 OF THE TENNESSEE DEPARTMENT OF TRANSPORTATION STANDARD SPECIFICATIONS FOR ROAD AND BRIDGE CONSTRUCTION DATED MARCH 1, 2006 AND WITH THE LATEST REVISIONS TO THE NATIONAL ELECTRIC CODE, NFPA 70.

(2) ALL INCIDENTAL EQUIPMENT AND MATERIAL REQUIRED FOR THE SUCCESSFUL EXECUTION OF THIS WORK SHALL BE FURNISHED IN 714 ITEMS WHETHER SPECIFICALLY NOTED OR NOT.

(3) STANDARDS SHALL BE DESIGNED IN ACCORDANCE WITH THE REQUIREMENTS OF THE LATEST EDITION OF THE STANDARD SPECIFICATIONS FOR STRUCTURAL SUPPORT FOR HIGHWAY SIGNS, LUMINARIES AND TRAFFIC SIGNALS PUBLISHED BY THE AMERICAN ASSOCIATION OF STATE HIGHWAY AND TRANSPORTATION OFFICIALS.

SPECIAL LIGHTING NOTES

(4) ALL CONDUIT SHALL BE SCHEDULE 40 PVC UNLESS OTHERWISE NOTED IN THE PLANS.

(5) ALL PROPOSED LUMINAIRES SHALL BE BALLASTED FOR 240V OPERATION.

(6) ALL LIGHT POLES SHALL HAVE CONCRETE FOUNDATIONS AND BREAK-AWAY COUPLINGS. NO TRANSFORMER BASES WILL BE PERMITTED. NO SCREW-IN FOUNDATIONS SHALL BE ALLOWED IN NEW FILL AREA. CONTRACTOR MAY USE SCREW-IN TYPE FOUNDATIONS WHERE NO NEW FILL IS PLACED WITH THE CONSENT OF THE ENGINEER.

(7) ALL LIGHT POLES SHALL BE INSTALLED WITH THE HAND HOLE ON THE DOWNSTREAM SIDE OF ONCOMING TRAFFIC.

(8) FOR JACK AND BORE, USE ONLY POLYETHYLENE PIPE. NO SEAMS ARE PERMITTED. CONTRACTOR SHALL USE POLYETHYLENE PIPE ADHESIVE AT JUNCTIONS.

(9) POLES MAY BE ADJUSTED 5'. ANY ADJUSTMENT GREATER THAN 5' SHALL BE APPROVED BY THE ENGINEER.

(10) SOME UTILITIES MAY REQUIRE LOCATION BY HAND DIGGING PRIOR TO PROPOSED LIGHT POLE INSTALLATION.

(11) CABLES FOR STREET LIGHTING SHALL BE INSTALLED IN CONDUIT AND PULL BOXES INDEPENDENT OF ANY OTHER SYSTEM.

(12) A LIGHTING PULL BOX SHALL BE INSTALLED AT THE BASE OF THE SIGNAL POLES AT LP 82 AND LP 85.

(13) LIGHTING PULL BOXES SHALL BE LABELED 'STREET LIGHTING'.

(14) LIGHT STANDARDS SHALL BE PAINTED 'COLLIERVILLE GREEN'.

(15) SEE MLGW WIRING DESIGN CRITERIA, SHEET 57D.

LIGHTING SCOPE OF SERVICES NOTES

(16) THE PROPOSED LIGHTING DESIGN LIMITS INCLUDE I-40 AT CANADA ROAD.

(17) THE LIGHTING DESIGN CONSISTS OF 118-ROADWAY LUMINAIRES (COBRAHEAD) WITH 15' ARMS (98-SINGLE ARMS AND 20- DOUBLE ARMS):

A. 94-SINGLE ARM ROADWAY LUMINAIRES (COBRAHEAD) SHALL BE INSTALLED OFFSET FROM THE EDGE OF PAVEMENT. OF THESE, 12 ARE TO BE INSTALLED TO ACCOMMODATE FUTURE WIDENING, LP 21 THRU LP 24, LP 62 THRU LP 65, AND LP 94 THRU LP 97. REFER TO LIGHTING DETAILS (FUTURE WIDENING), SHEET 57H.

B. 4-SINGLE ARM ROADWAY LUMINAIRES (COBRAHEAD), LP 82, LP 85, LP 113, AND LP 116, SHALL BE INSTALLED ON THE NEW SIGNAL POLES. REFER TO LIGHTING DETAILS (LIGHTING ON SIGNAL POLES), SHEET 57J.

C. 12-SINGLE ARM ROADWAY LUMINAIRES (COBRAHEAD), LP 72 AND LP 98 THRU LP 108, SHALL BE INSTALLED ON THE BARRIER WALL FOR THE RETAINING WALLS. REFER TO STRUCTRUAL LIGHTING DETAILS, SHEETS 57K AND 57L.

D. 8-DOUBLE ARM ROADWAY LUMINAIRES (COBRAHEAD), LP 9 THRU LP 16, SHALL BE INSTALLED ON THE PROPSED MEDIAN BARRIER. REFER TO TDOT STD. DWG. T-L-2.

E. 12-DOUBLE ARM ROADWAY LUMINAIRES (COBRAHEAD), LP 1 THRU LP 8 AND LP 17 THRU LP 20, SHALL BE INSTALLED IN THE DEPRESSED, GRASSED MEDIAN.

(18) A STANDARD MLGW 38' STEEL MONOTUBE POLE WITH 15' ARM AND 7' RISE SHALL BE INSTALLED AT ALL LOCATIONS. REFER TO MLGW STANDARDS ON SHEETS 57R THRU 57U.

(19) TYPICAL MOUNTING HEIGHT IS LISTED AS 45'. ACTUAL MOUNTING HEIGHT VARIES.

(20) ANY CONDUIT IN THE BRIDGE PARAPET/RAIL, BRIDGE WALL, MEDIAN BARRIER, AND BARRIER WALL SHALL BE INSTALLED DURING ITS CONSTRUCTION. REFER TO STRUCTURAL LIGHTING DETAILS, SHEETS 57K THRU 57M.

GROUND RODS NOTES

(21) USE TWO (2) 5/8" X 8' COPPER PLATED GROUND RODS JOINED END TO END, USING A THREADLESS GROUND ROD COUPLING, EMBEDDED IN THE GROUND FOR EACH GALVANIZED STEEL LIGHT POLE AND AT EACH CONTROL CENTER. EQUIPMENT BEING GROUNDED SHALL BE BONDED TO THE GROUND RODS USING A #4 SOLID BARE COPPER WIRE AND A 5/8" THREADLESS GROUND ROD CLAMP. (SEE SHEET 57U)

(22) FOR GROUNDING WITHIN STRUCTURES, USE TWO (2) 5/8" X 8' COPPER PLATED GROUND RODS JOINED END TO END, USING A THREADLESS GROUND ROD COUPLING, EMBEDDED IN THE GROUND AT EACH END OF THE STRUCTURE. EQUIPMENT BEING GROUNDED SHALL BE BONDED TO THE GROUND RODS USING A #4 SOLID BARE COPPER WIRE AND A 5/8" THREADLESS GROUND ROD CLAMP. (SEE SHEET 57U)

SEALED BY

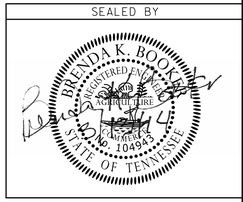

STATE OF TENNESSEE
DEPARTMENT OF TRANSPORTATION

LIGHTING DETAILS

(POLE DATA & NOTES)

3/13/2014 2:10:50 PM
C:\Users\BE-Bea\Desktop\Booker\01_ACTIVE\TDOT\E1616\SHELBY\04_I-40 AT CANADA RD LIGHTING\05_FINAL CONST DGN FILES\057C.SHT

TYPE	YEAR	PROJECT NO.	SHEET NO.
CONST.	2014	NH-I-40-1(283)20	57D

WIRING AND CONDUIT SCHEDULE

RUN NO.	POLE NO.	TO	POLE NO.	TRENCHED CONDUIT LENGTH (FT)	CONDUIT IN MEDIAN BARRIER(2) (FT)	CONDUIT IN BARRIER WALL(2) (FT)	CONDUIT IN BRIDGE WALL(2) (FT)	CONDUIT IN BRIDGE PARAPET (2) (FT)	JACK & BORE CONDUIT LENGTH (FT)	CABLE LENGTH (FT)	SPECIAL NOTES	CONTROL CENTER NO.	CIRCUIT NO.	NO. OF 2" SCH. 40 PVC CONDUIT (1)	NO. & SIZE OF WIRE
1	JBB	TO	UPL 1 AND UPL 2				140			140		1	3	1	3 @ #6 AWG 1 @ #4 GROUND
	JBC	TO	UPL 4 AND UPL 5				130			130		1	3		
2	UPL 2	TO	UPL 3				70			70		1	3	1	2 @ #6 AWG 1 @ #4 GROUND
	UPL 5	TO	UPL 6				85			85		1	3		
3	CC1	TO	PBA	40					65	105		1	1	1	3 @ #4 AWG 1 @ #4 GROUND
	PBA	TO	LP 13 THRU LP 20	1250	1060				85	2395		1	1		
	PBA	TO	LP 108 THRU LP 104	600		1245				1845		1	1		
	CC1	TO	LP 91 THRU PBB	1020						1020		1	2		
	PBB	TO	LP 95 THRU LP 96	330						330		1	2		
	PBB	TO	PBC						190	190	(A)	1	2		
	PBC	TO	LP 61 THRU LP 62	355						355		1	2		
	PBC	TO	PBD (LP 60 THRU LP 54)	1465						1465		1	2		
	PBD	TO	LP 52	55					60	115		1	2		
	PBD	TO	LP 51 THRU LP 45	1370					75	1445		1	2		
	CC1	TO	PBE	170						170		1	3		
	PBE	TO	PBF						55	55		1	3		
	PBE	TO	PBG (LP 88 & LP 90)	260						260		1	3		
	PBG	TO	LP 87 THRU LP 85	580						580		1	3		
	PBG	TO	PBH						145	145	(B)	1	3		
	PBH	TO	LP 79 TO LP 82	660					80	740		1	3		
	PBH	TO	PBJ	145						145		1	3		
	PBJ	TO	PBL (LP 78 & LP 77)	335					120	455	(C, D)	1	3		
	PBJ	TO	LP 76 THRU LP 65	2345		180				2525		1	3		
	PBF	TO	PBK	20					60	80		1	3		
	PBK	TO	JBA (LP 117)	135								1	3		
	JBA	TO	LP 115, LP 116 AND LP 102 THRU LP 99	880		1035		250		2165	(E, F)	1	3		
	PBL	TO	JBD AND LP 113 THRU LP 112	440				220		660		1	3		
4	LP 104	TO	LP 103			265				265		1	1	1	2 @ #4 AWG 1 @ #4 GROUND
	LP 96	TO	LP 97	270						270		1	2		
	LP 52	TO	LP 53	160						160		1	2		
	LP 45	TO	LP 44	215						215		1	2		
	LP 62	TO	LP 63	275						275		1	2		
	PBF	TO	LP 89	150						150		1	3		
	LP 85	TO	LP 84	220					85	305		1	3		
	LP 82	TO	LP 83	210						210		1	3		
	LP 65	TO	LP 64	250						250		1	3		
	PBK	TO	LP 118	115						115		1	3		
	PBL	TO	LP 114	50						50		1	3		
	LP 110	TO	LP 109	185						185		1	3		
	LP 99	TO	LP 98			265				265		1	3		
5	CC1	TO	PBM	2635					370	3005	(A)	1	4	1	3 @ #2 AWG 1 @ #4 GROUND
	PBM	TO	LP 36 THRU LP 42	1310						1310		1	4		
	PBM	TO	PBP	70					60	130		1	4		
	PBP	TO	PBQ	110						110		1	4		
	PBN	TO	LP 32 THRU LP 22	2365						2365		1	4		
	CC1	TO	LP 12 THRU LP 1	2620	1080				350	4050	(B, C, D)	1	5		
6	LP 42	TO	LP 43	195						195		1	4	1	2 @ #2 AWG 1 @ #6 GROUND
	PBP	TO	LP 35	40						40		1	4		
	PBQ	TO	LP 34	60					75	135		1	4		
	PBQ	TO	LP 33	35						35		1	4		
	LP 22	TO	LP 21	250						250		1	4		
7	LP 98	TO	PBR			225				225		NA	NA	1	PULL WIRE
	LP 103	TO	PBS			40				40		NA	NA		

(1) MAX ALLOWABLE FILL = 40%
(2) CONDUIT INCLUDED WITH THE STRUCTURES ITEMS.

PBA THRU PBS = PULL BOX A THRU PULL BOX S
JBC THRU JBD = JUNCTION BOX C THRU JUNCTION BOX D

(A) 2-CONDUITS SHALL BE INSTALLED AT JACK AND BORE CROSSING (190 LF).
(B) 2-CONDUITS SHALL BE INSTALLED AT JACK AND BORE CROSSING (145 LF).
(C) 2-CONDUITS SHALL BE INSTALLED AT JACK AND BORE CROSSING (65 LF).
(D) 2-CONDUITS SHALL BE INSTALLED AT JACK AND BORE CROSSING (55 LF).
(E) CONDUIT RUN SHALL INTERCEPT JBB AND JBH.
(F) TO SIGNAL POLE IN BRIDGE SIDEWALK.

MLGW WIRING DESIGN CRITERIA

(1) ALL EXPRESSWAY CIRCUITS SHALL BE 3-WIRE (PLUS #4 SOLID BARE COPPER GROUND WIRE), 240/480 VOLTS. THE LUMINAIRES SHOULD OPERATE AT 240 VOLTS WITH CONSECUTIVE LUMINAIRES BEING CONNECTED ALTERNATING BETWEEN “A” PHASE AND “B” PHASE OF THE THREE WIRE CIRCUIT.

(2) THE LIGHTING SYSTEM SHALL OPERATE ON A THREE WIRE FEED WITH ALTERNATING CONSECUTIVE LIGHTS ON EACH OF THE TWO PHASES. PHASE "A" IS TERMINATED AT ONE OF THE TWO POLES OF THE BREAKER SWITCH AND PHASE "B" IS TERMINATED ON THE OTHER POLE. THE NEUTRAL IS COMMON TO EACH PHASE. THE LAST SPAN OF WIRE IN A CIRCUIT CAN BE A 2-WIRE CIRCUIT (PLUS BARE COPPER GROUND WIRE).

(3) NO MORE THAN ONE 3-WIRE CIRCUIT, PLUS GROUND WIRE IF REQUIRED, SHALL BE INSTALLED IN A CONDUIT RUN. GROUND WIRE SHALL BE RUN INSIDE CONDUIT IN STRUCTURES.

(4) CONDUIT RUNS MAY BE INSTALLED IN THE SAME TRENCH.

(5) CONDUIT BENDS SHALL NOT EXCEED A 24” RADIUS.

(6) ALL CONDUIT SHALL BE INSTALLED TO ENTER A NEW OR EXISTING PULLBOX ON ONLY ONE END OF THE PULL BOX. ENDBELLS SHALL BE PROVIDED ON ALL CONDUITS. WIRING FOR ONLY ONE CIRCUIT SHALL BE ALLOWED IN A PULL BOX.

(7) AT BRIDGES AND WALLS, ALL SPLICES SHALL BE IN JUNCTION BOXES, PULLBOXES OR HANDHOLES USING MLGW APPROVED CONNECTORS, OR MOLES AND TAP KITS.

(8) DURING THE INSTALLATION OF ANY CABLE, THE CONTRACTOR SHALL TAKE CARE NOT TO DAMAGE CONDUCTORS, INSULATION, OR OUTER COVERING. THE LENGTH OF CABLE INSTALLED SHALL NOT CAUSE EXCESSIVE STRESS ON THE CONDUCTORS OR ANY PART OF THE CABLE. AN INSERT LUBRICANT APPROVED BY MLGW SHALL BE USED IN PLACING CABLE IN CONDUIT.

(9) A BARE GROUND WIRE SHALL BE INSTALLED OUTSIDE THE CONDUIT IN THE TRENCH.

(10) A GROUND WIRE SHALL BE RUN INSIDE THE CONDUIT WITHIN STRUCTURES (BRIDGES AND RETAINING WALLS), SHALL BE COLORED GREEN AND HAVE USE-2 RUGGEDIZED INSULATION.

(11) PULL BOXES ARE REQUIRED TO BE INSTALLED IN ANY CONDUIT RUN THAT EXCEEDS 1000 FT. THE LOCATION OF THE PULL BOX SHALL BE SUCH THAT THE PULL LENGTH BETWEEN PULLING POINTS DOES NOT EXCEED 1000 FT.

(12) ALL WIRES RUN IN CONDUIT SHALL BE SOLID COPPER AND HAVE USE-2 RUGGEDIZED INSULATION.

SEALED BY

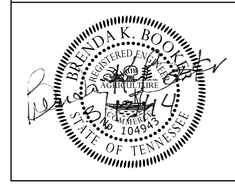

STATE OF TENNESSEE
DEPARTMENT OF TRANSPORTATION

LIGHTING DETAILS

(WIRING DATA)

3/13/2014 2:13:03 PM
C:\Users\BE-Beo\Desktop\Booker\01_ACTIVE\TDOT\E1616\SHELBY\04_I-40 AT CANADA RD LIGHTING\05_FINAL CONST DGN FILES\057D.SHT

TYPE	YEAR	PROJECT NO.	SHEET NO.
CONST.	2014	NH-I-40-1(283)20	57E

LIGHTING NOTES:

1. FOR CURVE DATA REFER TO GEOMETRIC LAYOUT SHEET 6D.
2. FOR BRIDGE LIGHTING DETAILS, SEE SHEET 57M.
3. LP 113 AND LP 116 SHALL BE INSTALLED ON THE SIGNAL POLES. A PULL BOX LABELED 'STREET LIGHTING' SHALL BE INSTALLED AT THE BASE OF THE SIGNAL POLES.

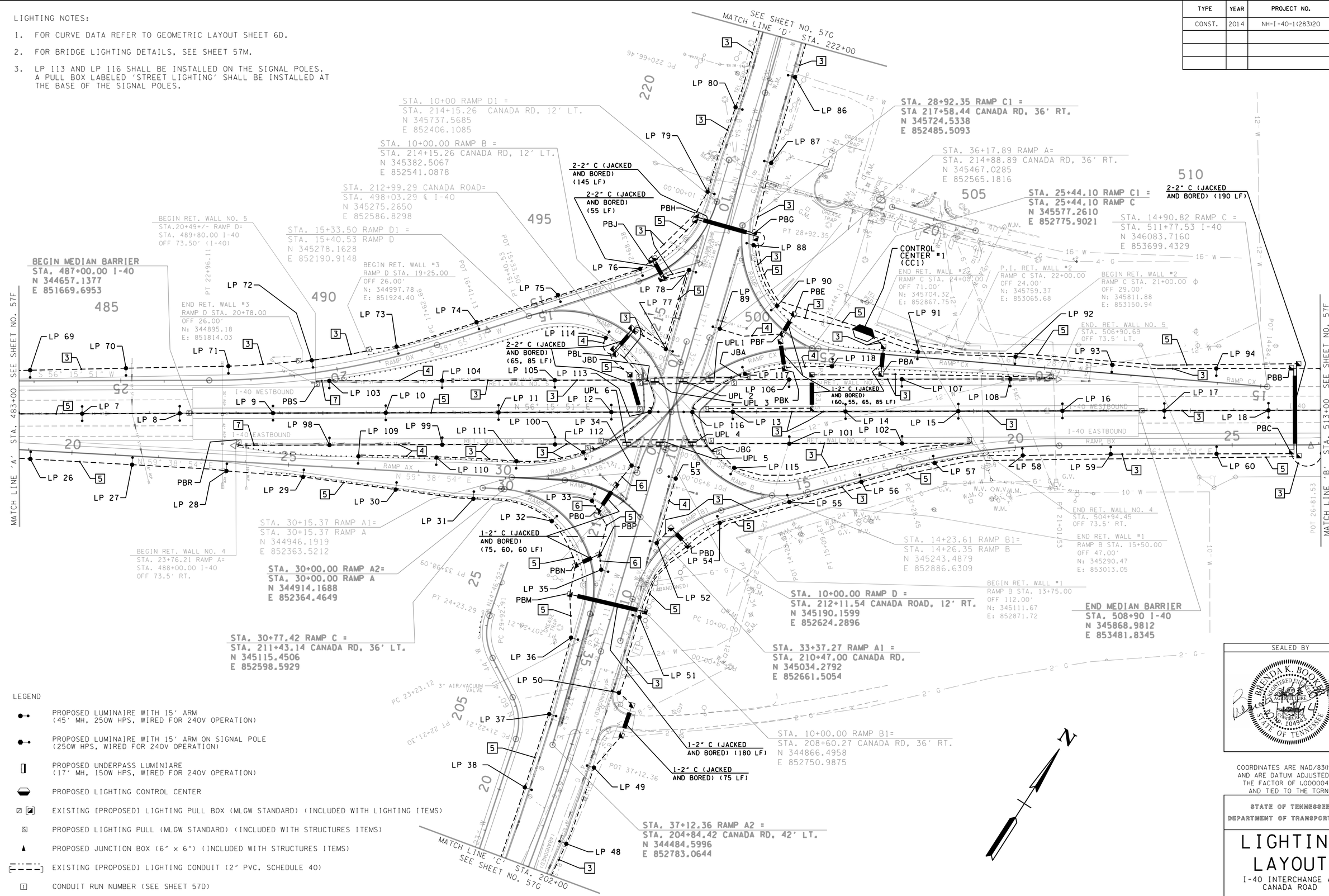

LEGEND

- PROPOSED LUMINAIRE WITH 15' ARM (45' MH, 250W HPS, WIRED FOR 240V OPERATION)
- PROPOSED LUMINAIRE WITH 15' ARM ON SIGNAL POLE (250W HPS, WIRED FOR 240V OPERATION)
- PROPOSED UNDERPASS LUMINIARE (17' MH, 150W HPS, WIRED FOR 240V OPERATION)
- PROPOSED LIGHTING CONTROL CENTER
- EXISTING [PROPOSED] LIGHTING PULL BOX (MLGW STANDARD) (INCLUDED WITH LIGHTING ITEMS)
- PROPOSED LIGHTING PULL (MLGW STANDARD) (INCLUDED WITH STRUCTURES ITEMS)
- PROPOSED JUNCTION BOX (6" x 6") (INCLUDED WITH STRUCTURES ITEMS)
- EXISTING [PROPOSED] LIGHTING CONDUIT (2" PVC, SCHEDULE 40)
- CONDUIT RUN NUMBER (SEE SHEET 57D)

SEALED BY

BRENDA K. BOOKER
REGISTERED ENGINEER
AND ARCHITECT
No. 104943
STATE OF TENNESSEE

COORDINATES ARE NAD/83(1995) AND ARE DATUM ADJUSTED BY THE FACTOR OF 1.00000477 AND TIED TO THE TGRN.

STATE OF TENNESSEE
DEPARTMENT OF TRANSPORTATION

LIGHTING LAYOUT

I-40 INTERCHANGE AT CANADA ROAD

SCALE: 1"=100'

3/13/2014 2:15:37 PM
C:\Users\BE-Beo\Desktop\Booker\01_ACTIVE\TDOT\E1616\SHELBY\04_I-40 AT CANADA RD LIGHTING\05_FINAL CONST DGN FILES\057E.SHT

LIGHTING NOTE:

1. FOR CURVE DATA REFER TO GEOMETRIC LAYOUT SHEET 6D.

TYPE	YEAR	PROJECT NO.	SHEET NO.
CONST.	2014	NH-I-40-1(283)20	57F

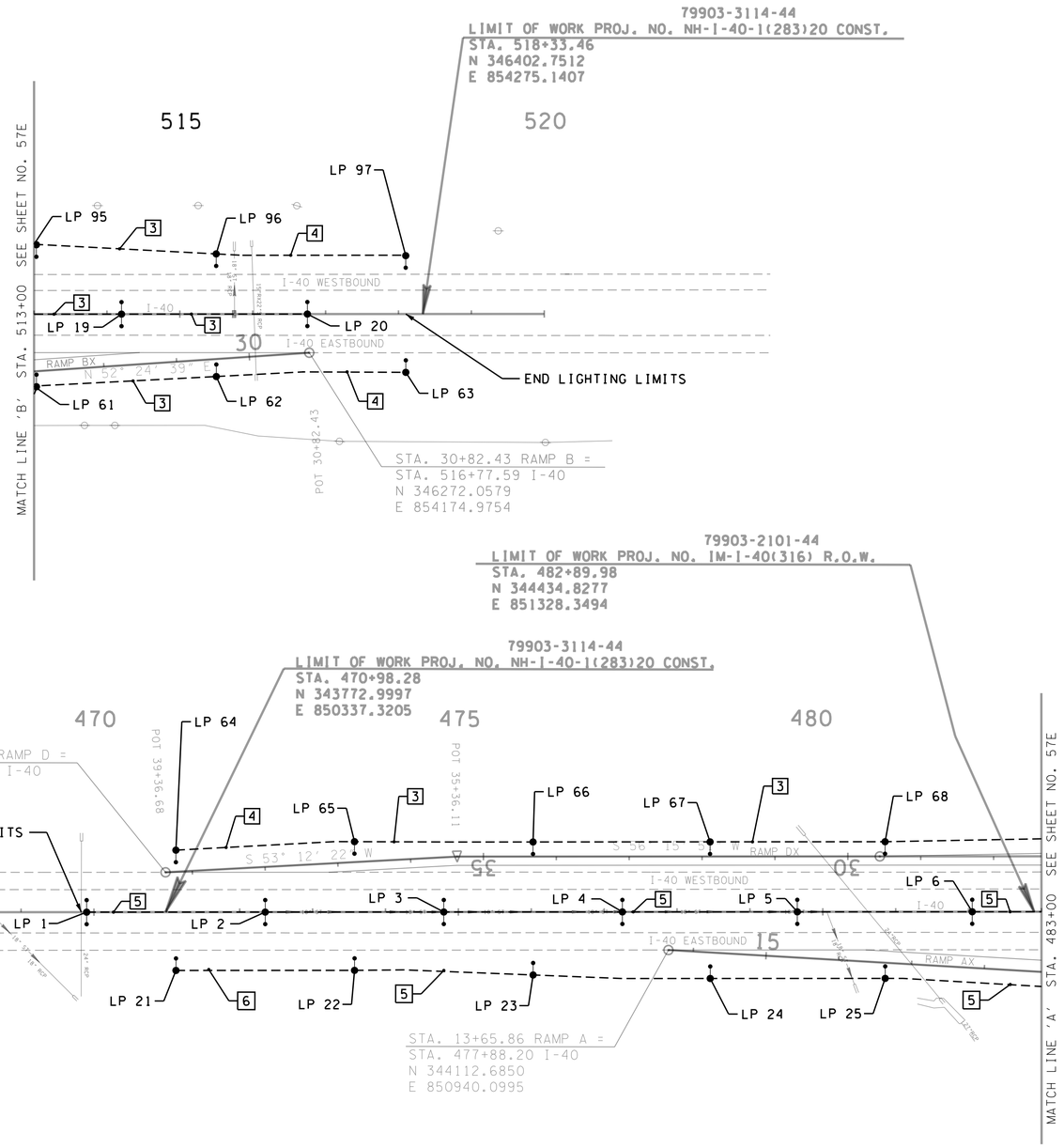

LEGEND

- PROPOSED LUMINAIRE WITH 15' ARM (45' MH, 250W HPS, WIRED FOR 240V OPERATION)
- PROPOSED LUMINAIRE WITH 15' ARM ON SIGNAL POLE (250W HPS, WIRED FOR 240V OPERATION)
- PROPOSED UNDERPASS LUMINIARE (17' MH, 150W HPS, WIRED FOR 240V OPERATION)
- PROPOSED LIGHTING CONTROL CENTER
- EXISTING [PROPOSED] LIGHTING PULL BOX (MLGW STANDARD) (INCLUDED WITH LIGHTING ITEMS)
- PROPOSED LIGHTING PULL (MLGW STANDARD) (INCLUDED WITH STRUCTURES ITEMS)
- PROPOSED JUNCTION BOX (6" x 6") (INCLUDED WITH STRUCTURES ITEMS)
- EXISTING [PROPOSED] LIGHTING CONDUIT (2" PVC, SCHEDULE 40)
- CONDUIT RUN NUMBER (SEE SHEET 57D)

SEALED BY

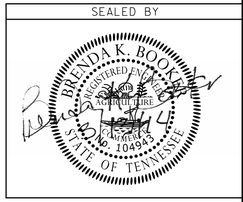

COORDINATES ARE NAD/83(1995) AND ARE DATUM ADJUSTED BY THE FACTOR OF 1.00000477 AND TIED TO THE TGRN.

STATE OF TENNESSEE
DEPARTMENT OF TRANSPORTATION

LIGHTING LAYOUT

I-40 INTERCHANGE AT CANADA ROAD

SCALE: 1"=100'

3/13/2014 2:48:39 PM
C:\Users\BE-Beo\Desktop\Booker\01_ACTIVE\TDOT\E1616\SHELBY\04_I-40 AT CANADA RD LIGHTING\05_FINAL CONST DGN FILES\057F.SHT

TYPE	YEAR	PROJECT NO.	SHEET NO.
CONST.	2014	NH-I-40-1(283)20	57G

LIGHTING NOTES:

1. FOR CURVE DATA REFER TO GEOMETRIC LAYOUT SHEET 6D.
2. LP 82 AND LP 85 SHALL BE INSTALLED ON SIGNAL POLES. A PULL BOX LABELED 'STREET LIGHTING' SHALL BE INSTALLED AT THE BASE OF THE SIGNAL POLES.

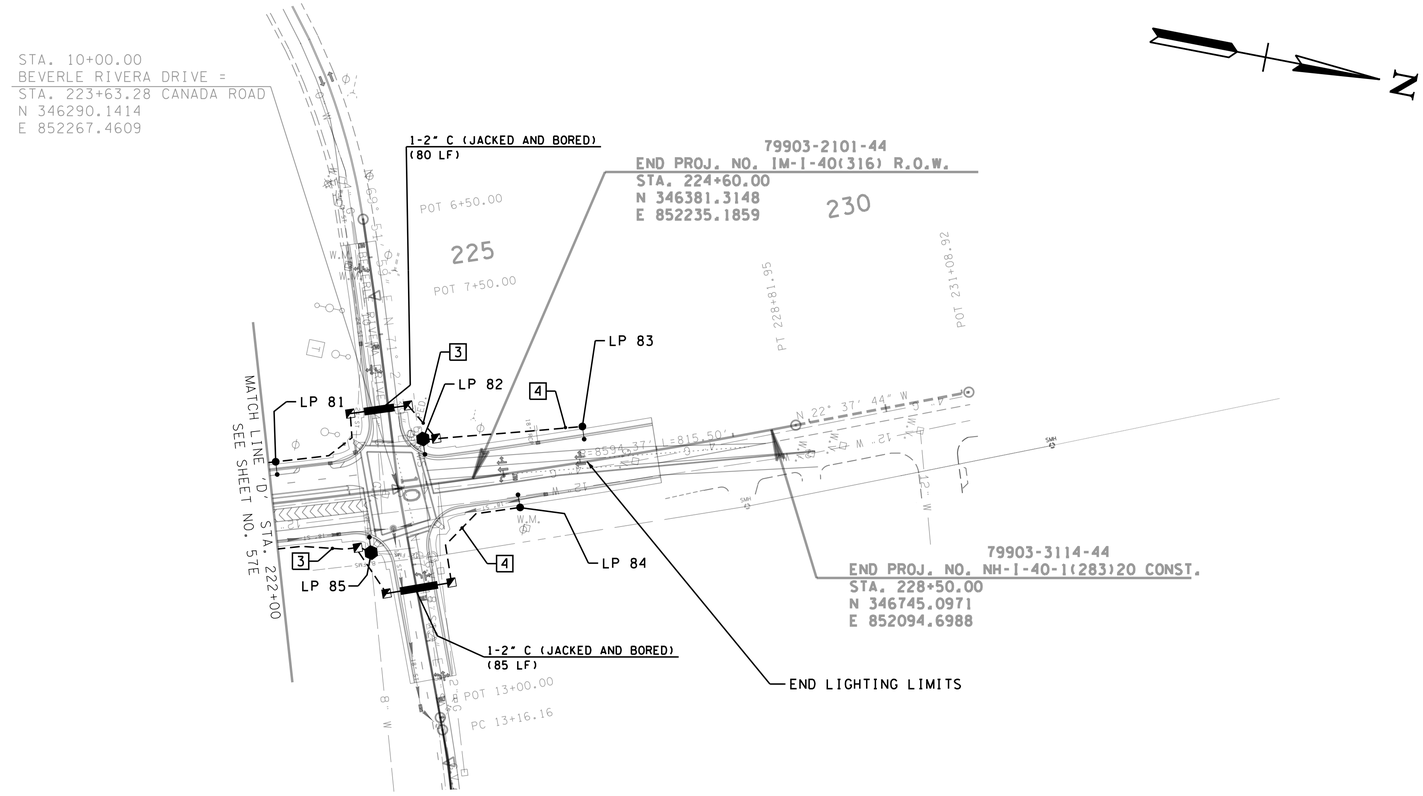

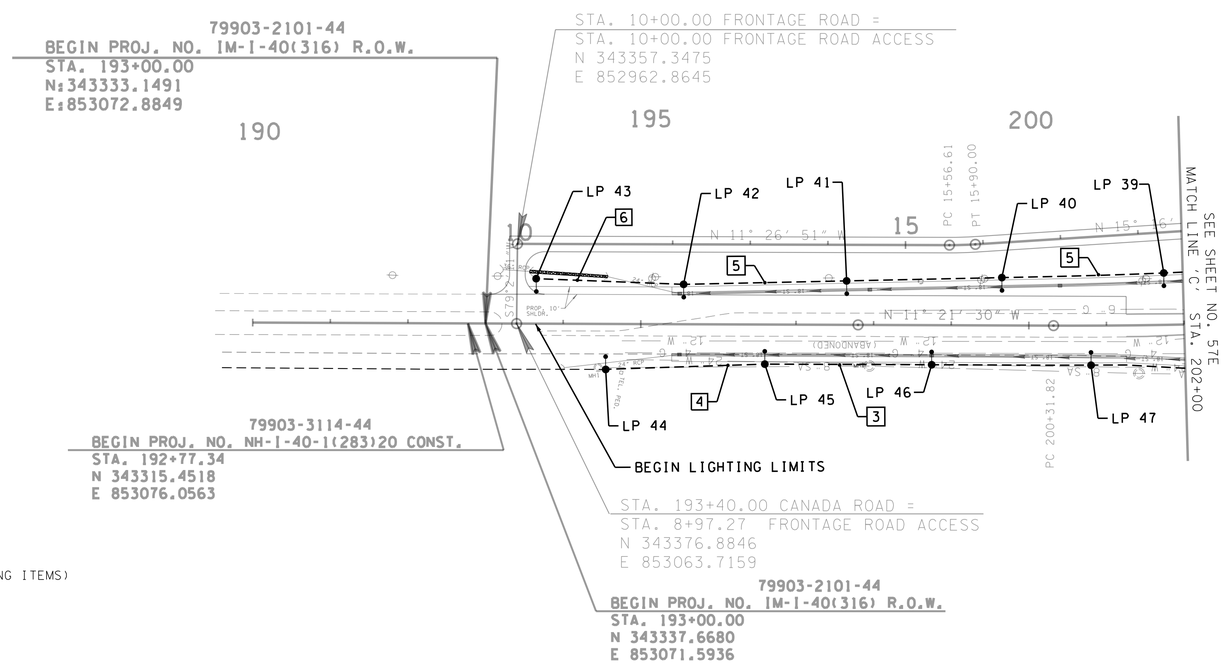

LEGEND

- PROPOSED LUMINAIRE WITH 15' ARM (45' MH, 250W HPS, WIRED FOR 240V OPERATION)
- PROPOSED LUMINAIRE WITH 15' ARM ON SIGNAL POLE (250W HPS, WIRED FOR 240V OPERATION)
- PROPOSED UNDERPASS LUMINIARE (17' MH, 150W HPS, WIRED FOR 240V OPERATION)
- PROPOSED LIGHTING CONTROL CENTER
- EXISTING [PROPOSED] LIGHTING PULL BOX (MLGW STANDARD) (INCLUDED WITH LIGHTING ITEMS)
- PROPOSED LIGHTING PULL (MLGW STANDARD) (INCLUDED WITH STRUCTURES ITEMS)
- PROPOSED JUNCTION BOX (6" x 6") (INCLUDED WITH STRUCTURES ITEMS)
- EXISTING [PROPOSED] LIGHTING CONDUIT (2" PVC, SCHEDULE 40)
- CONDUIT RUN NUMBER (SEE SHEET 57D)

SEALED BY

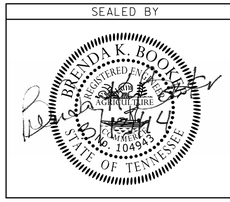

COORDINATES ARE NAD/83(1995) AND ARE DATUM ADJUSTED BY THE FACTOR OF 1.00000477 AND TIED TO THE TGRN.

STATE OF TENNESSEE
DEPARTMENT OF TRANSPORTATION

LIGHTING LAYOUT

I-40 INTERCHANGE AT CANADA ROAD

SCALE: 1"=100'

3/13/2014 3:05:24 PM
C:\Users\BE-Bea\Desktop\Booker\01_ACTIVE\TDOT\E1616\SHELBY\04_I-40 AT CANADA RD LIGHTING\05_FINAL CONST DGN FILES\057G.SHT

TYPE	YEAR	PROJECT NO.	SHEET NO.
CONST.	2014	NH-I-40-1(283)20	57H

ROADWAY LIGHT POLE SCHEDULE FOR FUTURE WIDENING

LIGHT POLE NO.	MOUNTING HEIGHT (FT)	BASELINE	STATION	POLE OFFSET (FT) (A)	SIDE	NORTHING	EASTING	OFFSET OF PRESENT EDGE OF TRAVEL LANE (FT) (B)	ELEV. AT PRESENT EDGE OF TRAVEL LANE (C)	ELEV. AT LIGHT POLE BASE (D)	FOUNDATION LENGTH ABOVE EXISTING GRADE (FT) (E)	FOUNDATION LENGTH ABOVE FUTURE GRADE (FT) (E)	FOUNDATION LENGTH (FT) (E)
LP 21	45	I-40	471+12.5	80.0	RT	343708.0711	850394.6193	54.0	405.90	404.82	2.00	0.50	8.0
LP 22	45	I-40	473+57.5	80.0	RT	343844.2705	850598.2727	54.0	404.38	403.27	1.50	0.50	6.5
LP 23	45	I-40	476+02.5	86.5	RT	343975.1103	850805.5106	54.0	402.74	401.74	0.50	0.61	7.5
LP 24	45	I-40	478+45.5	91.3	RT	344106.1320	851010.2207	55.7	401.37	400.21	3.00	0.75	9.0
LP 62	45	RAMP BX	29+53	23.9	RT	346170.2995	854086.4123	61.7	383.78	382.61	1.00	0.50	7.0
LP 63	45	I-40	518+10	79.3	RT	346320.0325	854298.9882	54.0	381.06	382.60	0.50	3.28	10.0
LP 64	45	RAMP DX	39+21	29.6	RT	343845.1274	850302.7782	54.0	406.03	404.72	2.00	0.50	8.0
LP 65	45	RAMP DX	36+76	28.1	RT	343990.7988	850499.7721	68.5	404.20	402.94	1.75	0.50	8.0
LP 94	45	RAMP CX	16+06	31.8	RT	346049.1044	853577.2858	64.7	389.51	388.17	2.50	0.50	8.5
LP 95	45	I-40	513+00	95.9	LT	346182.1564	853777.6546	54.0	386.77	387.70	0.50	3.00	9.0
LP 96	45	I-40	515+50	82.5	LT	346310.0523	853992.8764	54.0	383.93	383.20	3.00	1.00	9.0
LP 97	45	I-40	518+10	80.0	LT	346452.4814	854210.4089	54.0	381.06	379.32	1.00	0.50	7.0

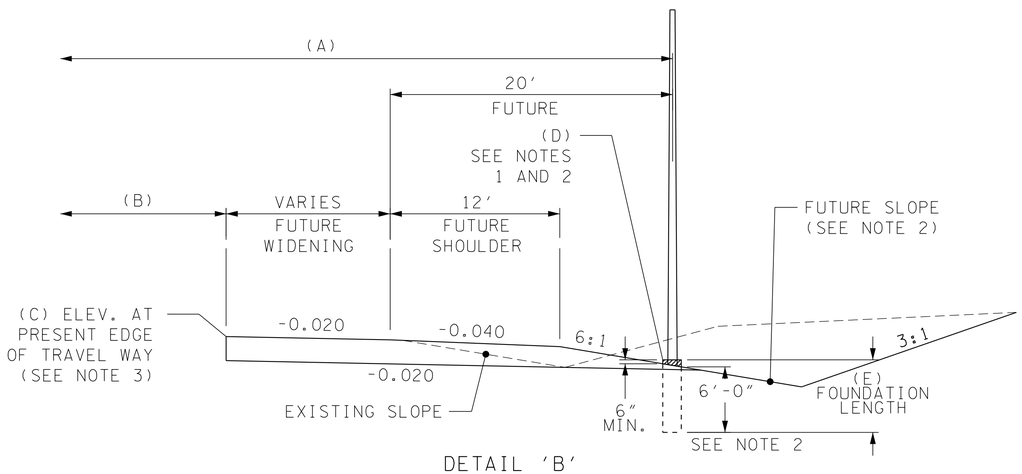

DETAIL 'B'
FOUNDATION INSTALLATION BASED ON FUTURE WIDENING
(NTS)

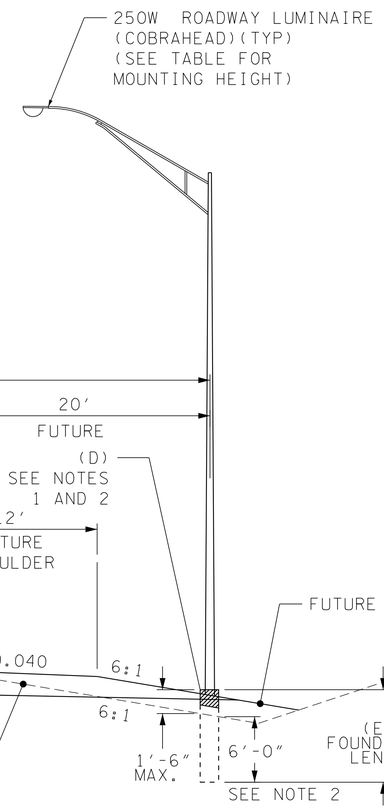

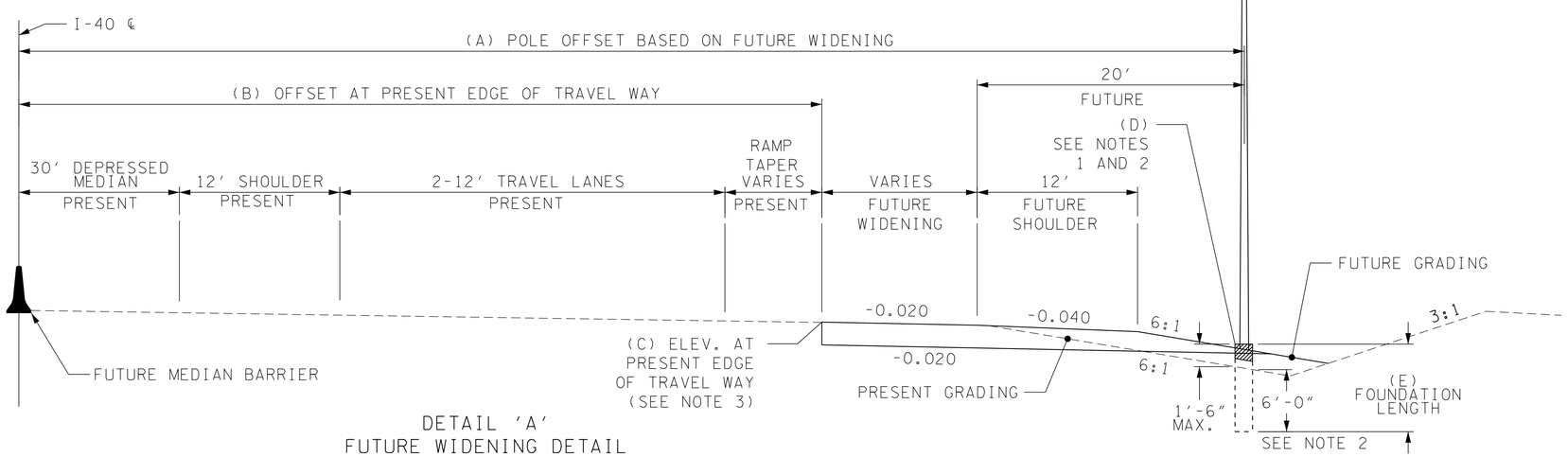

DETAIL 'A'
FUTURE WIDENING DETAIL
(NTS)

NOTES

1. CONTRACTOR SHALL INSTALL FOUNDATIONS FOR LP 21 THRU LP 24, LP 62 THRU LP 65, AND LP 94 THRU LP 97 AT ELEVATIONS (D) PER DETAILS 'A' AND 'B'.

2. CONCRETE FOUNDATION SHALL BE EXTENDED ABOVE GRADE TO ACCOMODATE THE GRADING OF THE FUTURE WIDENING PROJECT. FOUNDATION EXPOSURE ABOVE EXISTING GRADE SHALL NOT EXCEED 3.0'.

3. OFFSET (B), ELEVATIONS (C) AND (D), AND FOUNDATION LENGTH (E) WERE DETERMINED FROM CROSS-SECTIONS FOR THE FUTURE I-40 TDOT PROJECT 79003-3192-44/IM-40-1(303).

4. THE POLE FOUNDATION SHALL BE 0.5' (TYP.) ABOVE FUTURE PROPOSED SLOPE LINE AT THE FRONT FACE OF THE POLE FOUNDATION. FOUNDATION EXPOSURE ABOVE FUTURE GRADE SHALL NOT EXCEED 1.0'.

5. POLES LP 24 AND LP 96 MAY NEED TO BE RELOCATED DUE TO FUTURE WIDENING.

SEALED BY

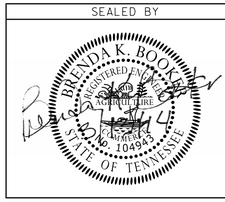

STATE OF TENNESSEE
DEPARTMENT OF TRANSPORTATION

LIGHTING DETAILS

(FUTURE WIDENING)

3/13/2014 2:25:04 PM
c:\Users\BE-Bea\Desktop\Booker\01_ACTIVE\TDOT\E616\SHELBY\04_I-40 AT CANADA RD LIGHTING\05_FINAL CONST DGN FILES\057H.SHT

TYPE	YEAR	PROJECT NO.	SHEET NO.
CONST.	2014	NH-I-40-1(283)20	57J

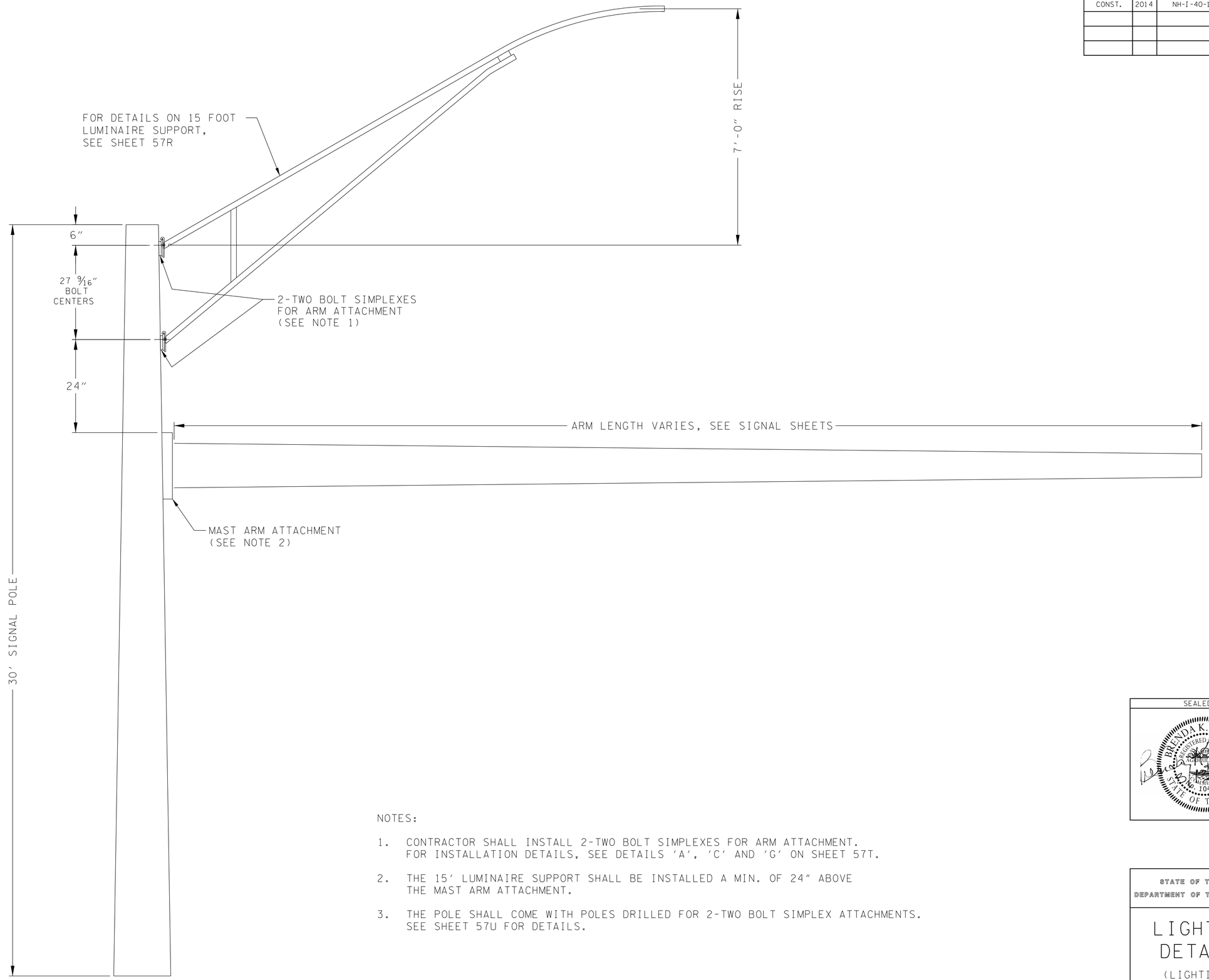

NOTES:

1. CONTRACTOR SHALL INSTALL 2-TWO BOLT SIMPLEXES FOR ARM ATTACHMENT. FOR INSTALLATION DETAILS, SEE DETAILS 'A', 'C' AND 'G' ON SHEET 57T.

2. THE 15' LUMINAIRE SUPPORT SHALL BE INSTALLED A MIN. OF 24" ABOVE THE MAST ARM ATTACHMENT.

3. THE POLE SHALL COME WITH POLES DRILLED FOR 2-TWO BOLT SIMPLEX ATTACHMENTS. SEE SHEET 57U FOR DETAILS.

SEALED BY

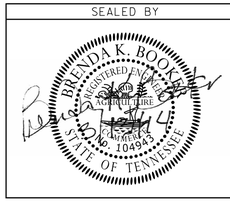

STATE OF TENNESSEE
DEPARTMENT OF TRANSPORTATION

LIGHTING DETAILS

(LIGHTING ON SIGNAL POLE)

3/13/2014 2:28:32 PM
C:\Users\BE-Bea\Desktop\Booker\01_ACTIVE\TDOT\E1616\SHELBY\04_I-40 AT CANADA RD LIGHTING\05_FINAL CONST DGN FILES\057J.SHT

TYPE	YEAR	PROJECT NO.	SHEET NO.
CONST.	2014	NH-I-40-1(283)20	57K

BARRIER WALL STRUCTURAL LIGHTING QUANTITIES (SINGLE ARM POLE)

BARRIER WALL FOR RETAINING WALL NO. 3
BEGIN RETAINING WALL RAMP D C_L STA. 19+25.00 RT
END RETAINING WALL RAMP D C_L STA. 20+78.00 RT

LIGHT POLE NO.	MT. HEIGHT FT	BASELINE	STATION	OFFSET (FT)	SIDE
LP 72	45+	RAMP DX	20+55	BARRIER WALL	RT

ITEMS 714-01.20 L.S. - STRUCTURAL LIGHTING (RET. WALL NO. 3) INCLUDES:
A) 180 L.F. OF 2" C (SCHEDULE 40 PVC)
B) 4 - ANCHOR BOLTS (4 PER POLE)
C) 2 - PULL BOXES (MEMPHIS STANDARD)
(1), (2), (3), (4)

BARRIER WALL FOR RETAINING WALL NO. 4

(LT OF CANADA ROAD)
BEGIN WALL I-40 C_L STA. 488+00.00 RT
END WALL I-40 C_L STA. 496+47.47 RT

LIGHT POLE NO.	MT. HEIGHT FT	BASELINE	STATION	OFFSET (FT)	SIDE
LP 98	45+	I-40	490+15	BARRIER WALL	RT
LP 99	45+	I-40	492+75	BARRIER WALL	RT
LP 100	45+	I-40	495+35	BARRIER WALL	RT

(RT OF CANADA ROAD)
BEGIN RETAINING WALL I-40 C_L STA. 498+87.27 RT
END RETAINING WALL I-40 C_L STA. 504+94.45 RT

LIGHT POLE NO.	MT. HEIGHT FT	BASELINE	STATION	OFFSET (FT)	SIDE
LP 101	45+	I-40	500+75	BARRIER WALL	RT
LP 102	45+	I-40	503+35	BARRIER WALL	RT

ITEMS 714-01.21 L.S. - STRUCTURAL LIGHTING (RET. WALL NO. 4) INCLUDES:
A) 885 L.F. OF 2" C (SCHEDULE 40 PVC) (LT OF CANADA RD)
B) 640 L.F. OF 2" C (SCHEDULE 40 PVC) (RT OF CANADA RD)
C) 20 - ANCHOR BOLTS (4 PER POLE)
D) 4 - PULL BOX (MEMPHIS STANDARD)
(1), (2), (3), (4)

BARRIER WALL FOR RETAINING WALL NO. 5

(LT OF CANADA ROAD)
BEGIN RETAINING WALL I-40 C_L STA. 497+37.64 LT
END RETAINING WALL I-40 C_L STA. 489+80.00 LT

LIGHT POLE NO.	MT. HEIGHT FT	BASELINE	STATION	OFFSET (FT)	SIDE
LP 103	45+	I-40	490+15	BARRIER WALL	LT
LP 104	45+	I-40	492+75	BARRIER WALL	LT
LP 105	45+	I-40	495+35	BARRIER WALL	LT

(RT OF CANADA ROAD)
BEGIN RETAINING WALL I-40 C_L STA. 499+42.32 LT
END RETAINING WALL I-40 C_L STA. 506+90.69 LT

LIGHT POLE NO.	MT. HEIGHT FT	BASELINE	STATION	OFFSET (FT)	SIDE
LP 106	45+	I-40	500+75	BARRIER WALL	LT
LP 107	45+	I-40	503+35	BARRIER WALL	LT
LP 108	45+	I-40	505+85	BARRIER WALL	LT

ITEMS 714-01.22 L.S. - STRUCTURAL LIGHTING (RET. WALL NO. 5) INCLUDES:
A) 765 L.F. OF 2" C (SCHEDULE 40 PVC) (LT OF CANADA RD)
B) 785 L.F. OF 2" C (SCHEDULE 40 PVC) (RT OF CANADA RD)
C) 24 - ANCHOR BOLTS (4 PER POLE)
D) 4 - PULL BOX (MEMPHIS STANDARD)
(1), (2), (3), (4)

FOOTNOTES:
(1) CONDUIT SHALL BE RUN THE ENTIRE LENGTH OF THE BARRIER WALL OR MEDIAN BARRIER.
(2) WIRE BETWEEN POLES TO BE AS SHOWN IN WIRING AND CONDUIT SCHEDULE, SHT 57D.
(3) SEAL AND COVER OPEN CONDUIT IN FOOTINGS WITH TAPE.
(4) INCLUDES THE COST OF THE PULL WIRE.

MEDIAN BARRIER STRUCTURAL LIGHTING QUANTITIES (DOUBLE ARM POLE)

MEDIAN BARRIER (LEFT OF CANADA ROAD)
BEGIN MEDIAN BARRIER I-40 C_L STA. 487+00.00
END MEDIAN BARRIER I-40 C_L STA. 497+36.73

LIGHT POLE NO.	MT. HEIGHT FT	BASELINE	STATION	OFFSET (FT)	SIDE
LP 9	45+	I-40	488+85	MEDIAN BARRIER	NA
LP 10	45+	I-40	491+45	MEDIAN BARRIER	NA
LP 11	45+	I-40	494+05	MEDIAN BARRIER	NA
LP 12	45+	I-40	496+65	MEDIAN BARRIER	NA

ITEMS 714-01.31 L.S. - STRUCTURAL LIGHTING (MEDIAN BARRIER) INCLUDES:
A) 1080 L.F. OF 2" C (SCHEDULE 40 PVC)
B) 16 - ANCHOR BOLTS (4 PER POLE)
C) 2- PULL BOX (MEMPHIS STANDARD)
(1), (2), (3), (4)

MEDIAN BARRIER (RIGHT OF CANADA ROAD)
BEGIN MEDIAN BARRIER I-40 C_L STA. 498+70.08
END MEDIAN BARRIER I-40 C_L STA. 508+90.00

LIGHT POLE NO.	MT. HEIGHT FT	BASELINE	STATION	OFFSET (FT)	SIDE
LP 13	45+	I-40	499+45	MEDIAN BARRIER	NA
LP 14	45+	I-40	502+05	MEDIAN BARRIER	NA
LP 15	45+	I-40	504+65	MEDIAN BARRIER	NA
LP 16	45+	I-40	507+05	MEDIAN BARRIER	NA

ITEMS 714-01.32 L.S. - STRUCTURAL LIGHTING (MEDIAN BARRIER) INCLUDES:
A) 1060 L.F. OF 2" C (SCHEDULE 40 PVC)
B) 16 - ANCHOR BOLTS (4 PER POLE)
C) 2 - PULL BOX (MEMPHIS STANDARD)
(1), (2), (3), (4)

NOTES:

1. LIGHT STANDARD FOUNDATIONS FOR SINGLE ARM POLES ON THE BARRIER WALL SHALL BE AS SHOWN ON SHEET 57L AND SHALL BE PAID FOR UNDER LIGHTING PAY ITEM 714-08.28.
2. LIGHT STANDARD FOUNDATIONS FOR DOUBLE ARM POLES ON THE MEDIAN BARRIER SHALL BE AS SHOWN ON TDOT STANDARD DRAWING T-L-2 AND SHALL BE PAID FOR UNDER LIGHTING PAY ITEM 714-08.26.
3. ANY CONDUIT, ANCHOR BOLTS, AND PULL BOXES INTEGRAL TO THE BARRIER WALL AND MEDIAN BARRIER SHALL BE INSTALLED DURING ITS CONSTRUCTION. THE COST FOR THESE ITEMS SHALL BE INCLUDED IN LUMP SUM STRUCTURAL LIGHTING PAY ITEMS 714-01.20 THRU 714-01.22, 714-01.31 AND 714-01.32 INCLUDED WITH THE STRUCTURES PAY ITEMS.

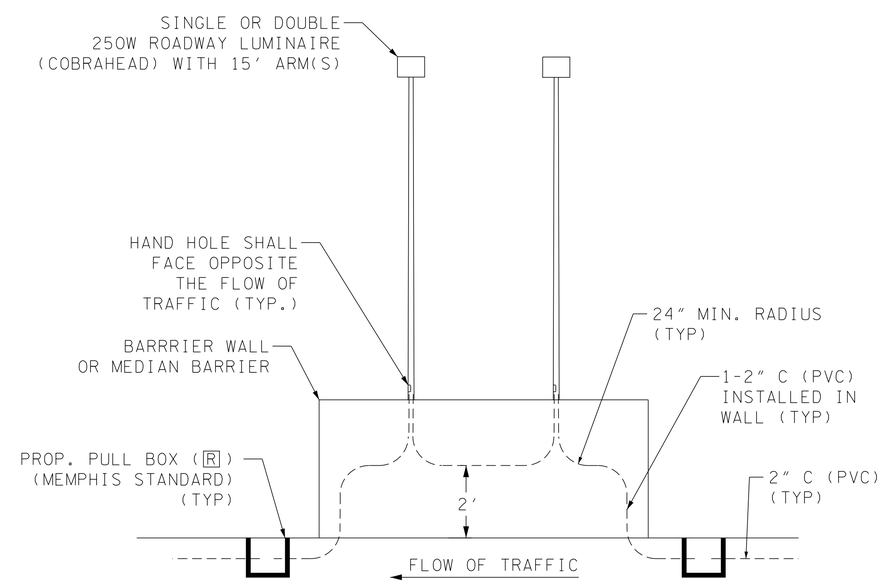

DETAIL 'A'
BARRIER WALL AND MEDIAN BARRIER LIGHTING DETAILS
(NTS)

SEALED BY

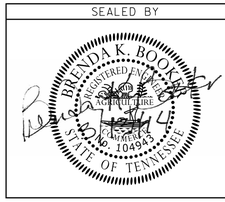

STATE OF TENNESSEE
DEPARTMENT OF TRANSPORTATION

BARRIER WALL & MEDIAN BARRIER STRUCTURAL LIGHTING DETAILS

3/13/2014 2:31:16 PM
C:\Users\BE-Beo\Desktop\Booker\01_ACTIVE\TDOT\E1616\SHELBY\04_I-40 AT CANADA RD LIGHTING\05_FINAL CONST DGN FILES\057K.SHT

TYPE	YEAR	PROJECT NO.	SHEET NO.
CONST.	2014	NH-I-40-1(283)20	57L

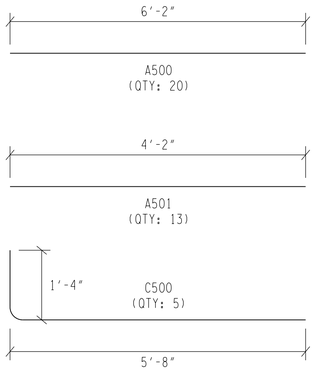

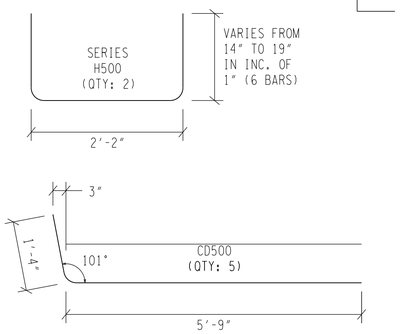

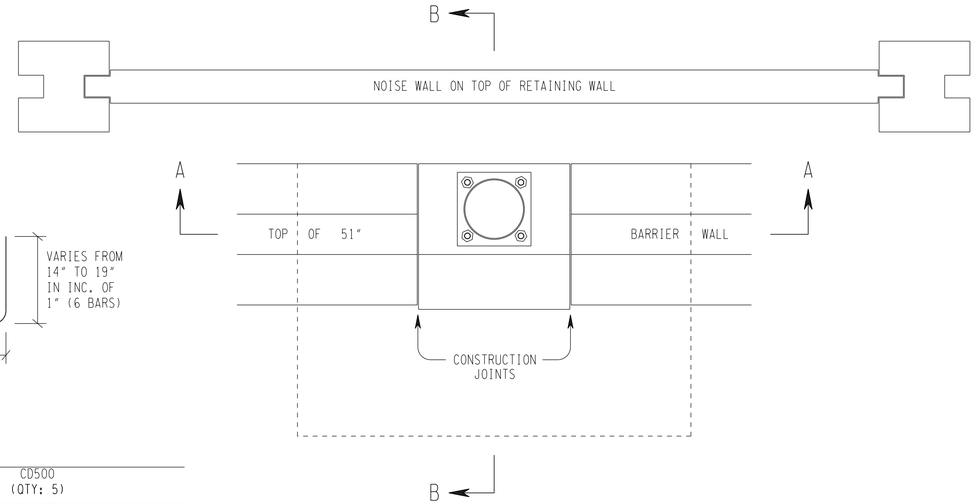

PLAN VIEW

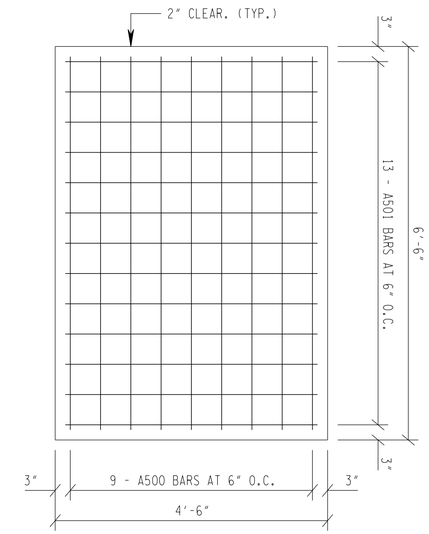

SECTION C-C

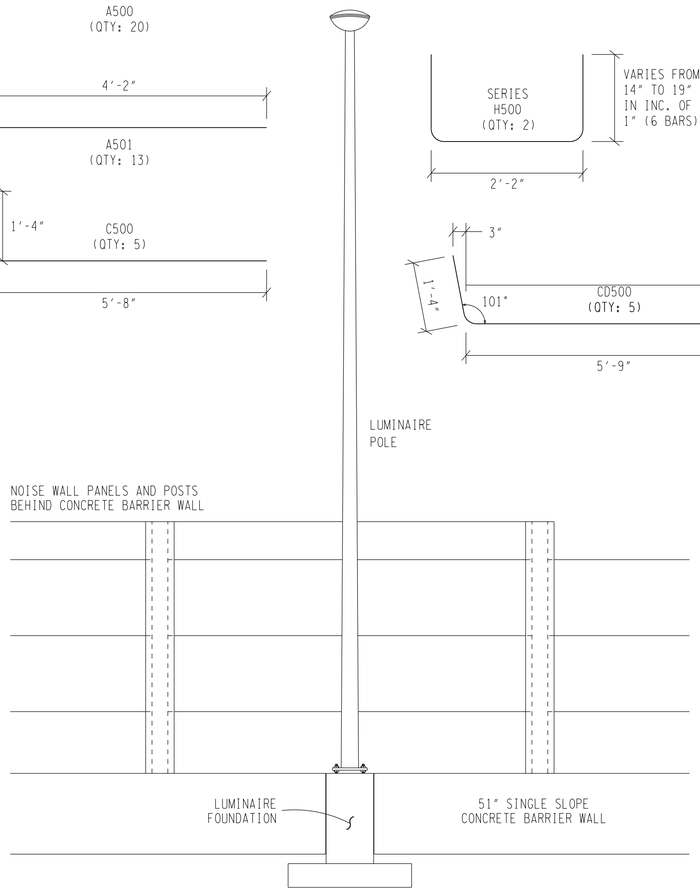

ELEVATION VIEW

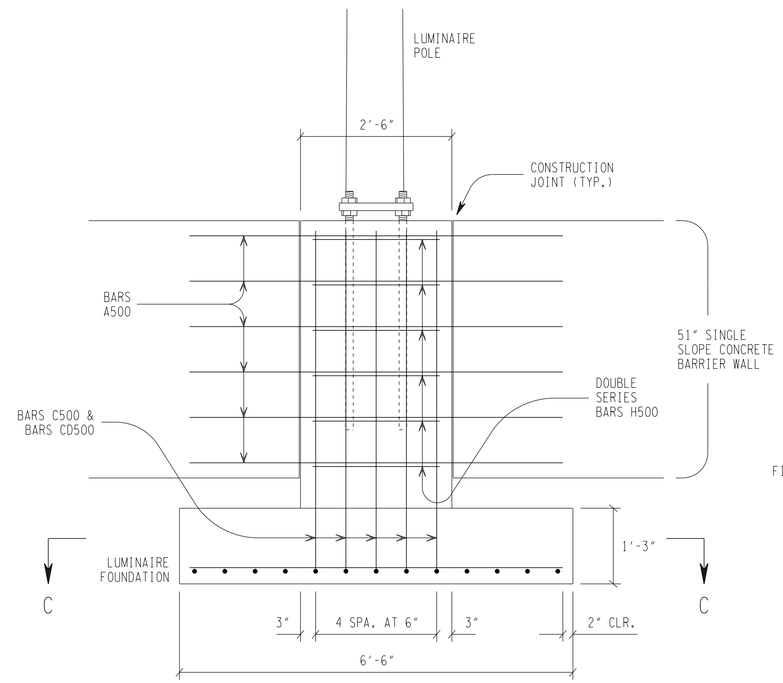

SECTION A-A

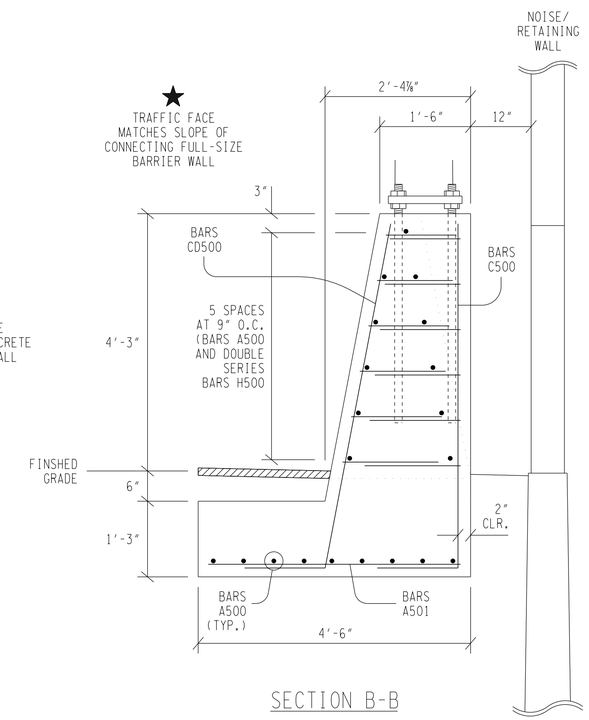

SECTION B-B

GENERAL NOTES

- MATERIALS IN CONCRETE BARRIER WALL AND FOOTINGS ARE TO MEET THE FOLLOWING SPECIFICATIONS:

  CONCRETE: F'c = 3 KSI AT 28 DAYS
  REINFORCING STEEL: ASTM A615, Fy = 60 KSI
  ALL REINFORCING STEEL IS TO BE EPOXY-COATED AND INSTALLED AS DETAILED ON THIS DRAWING.
- ESTIMATED QUANTITIES (EACH):

  CLASS "A" CONCRETE: 2.21 CY
  STEEL REINFORCING BARS: 320 LBS
- UNIT PRICE ITEM NO. 714-08.28, FOUNDATION FOR LIGHT STANDARDS (ROADWAY) (BARRIER WALL) PER EACH SHALL INCLUDE ALL COSTS FOR FURNISHING AND INSTALLING ALL MATERIALS AND LABOR NECESSARY TO CONSTRUCT THE PORTION OF THE BARRIER AND THE FOOTINGS SUPPORTING THE LIGHT STANDARDS.

NOTES:

1. FOR BARRIER WALL STRUCTURAL LIGHTING ITEMS AND LIGHT POLE LOCATIONS, SEE SHEET 57K.
2. LIGHTING CONTRACTOR SHALL COORDINATE LIGHT POLE FOUNDATIONS WITH THE ENGINEER.
3. FOR ADDITIONAL BARRIER WALL DETAILS, SEE TDOT STANDARD DRAWING SSS-MB-3.

SEALED BY

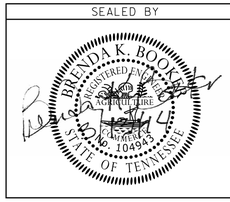

STATE OF TENNESSEE
DEPARTMENT OF TRANSPORTATION

BARRIER WALL LIGHTING FOUNDATION DETAILS

3/13/2014 2:33:16 PM
C:\Users\BE-Beo\Desktop\Booker\01_ACTIVE\TDOT\E1616\SHELBY\04_I-40 AT CANADA RD LIGHTING\05_FINAL CONST DGN FILES\057L.SHT

TYPE	YEAR	PROJECT NO.	SHEET NO.
CONST.	2014	NH-I-40-1(283)20	57M

LIGHTING NOTES:

1. FOR CURVE DATA REFER TO GEOMETRIC LAYOUT SHEET 6D.
2. LP 113 AND LP 116 SHALL BE MOUNTED ON THE SIGNAL POLES. SEE SIGNAL PLAN SHEET 56.
3. UPL 1 THRU UPL 6 SHALL BE MOUNTED ON THE BRIDGE WALLS.
4. THE SIGNALS SHALL BE WIRED INTO THE LIGHTING SYSTEM AT JBE AND JBF, THE 6" X 6" JUNCTION BOXES ADJACENT TO THE SIGNAL POLES.
5. ANY CONDUIT, PULL BOXES, AND JUNCTION BOXES INTEGRAL TO THE BRIDGE SHALL BE INSTALLED DURING ITS CONSTRUCTION. THE COST FOR THESE ITEMS SHALL BE INCLUDED IN LUMP SUM STRUCTURAL LIGHTING (BRIDGE OVERPASS AND UNDERPASS) PAY ITEM 714-01.01 INCLUDED WITH THE STRUCTURES PAY ITEMS.

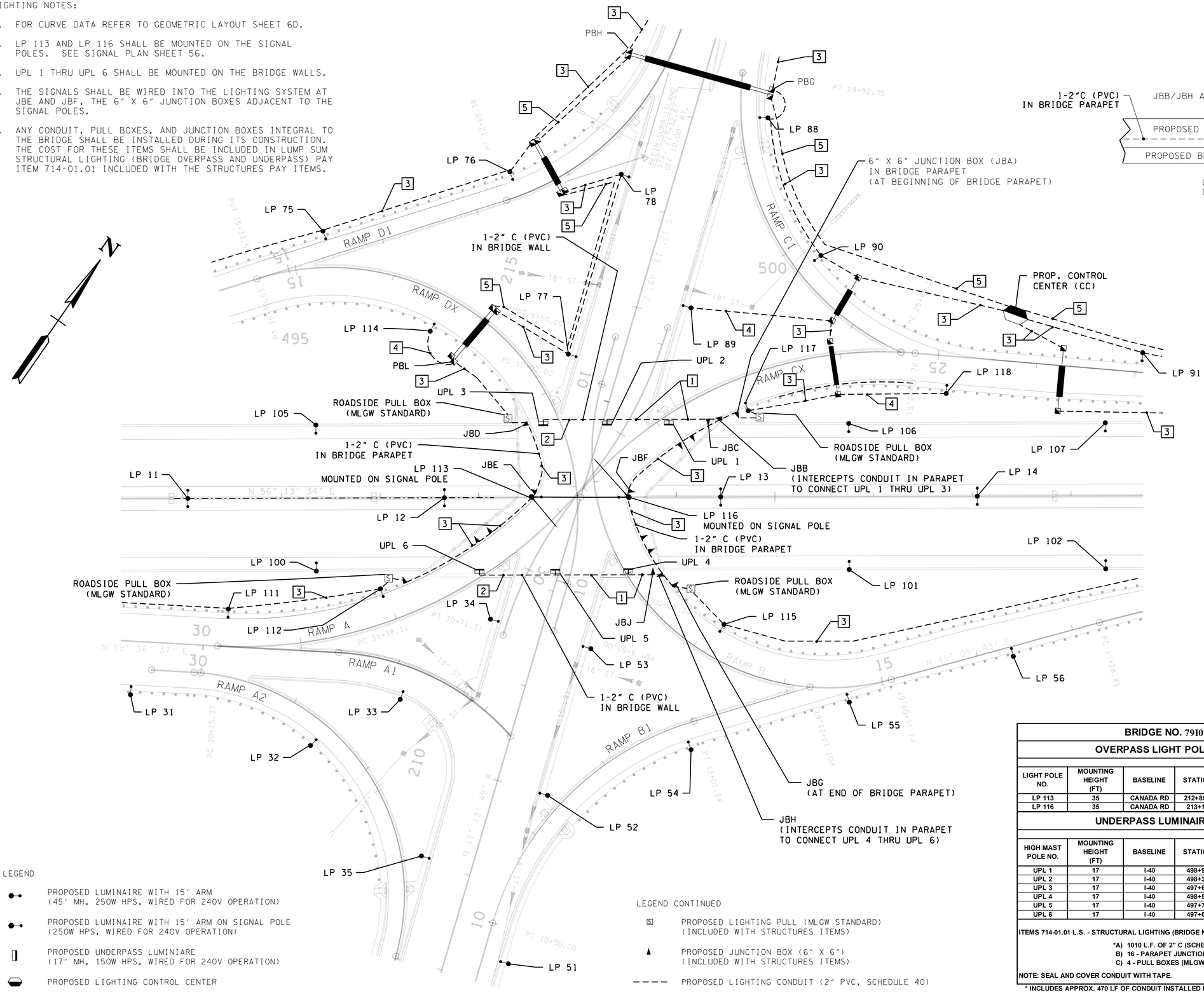

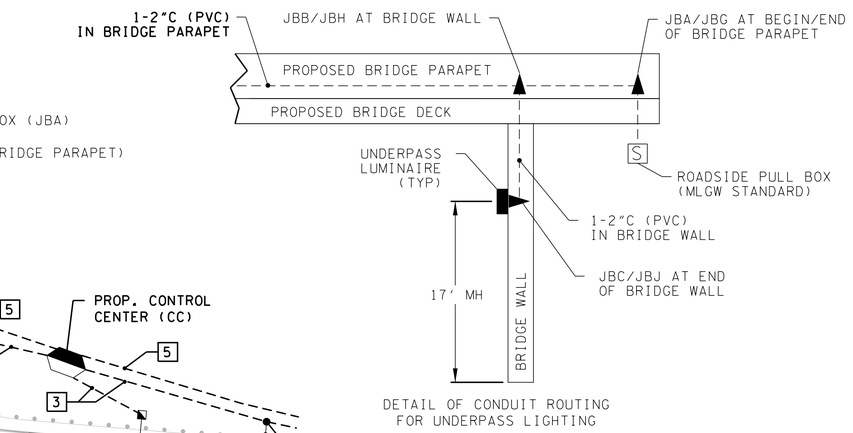

DETAIL OF CONDUIT ROUTING FOR UNDERPASS LIGHTING

LEGEND

- PROPOSED LUMINAIRE WITH 15' ARM (45' MH, 250W HPS, WIRED FOR 240V OPERATION)
- PROPOSED LUMINAIRE WITH 15' ARM ON SIGNAL POLE (250W HPS, WIRED FOR 240V OPERATION)
- PROPOSED UNDERPASS LUMINIARE (17' MH, 150W HPS, WIRED FOR 240V OPERATION)
- PROPOSED LIGHTING CONTROL CENTER
- EXISTING [PROPOSED] LIGHTING PULL BOX (MLGW STANDARD) (INCLUDED WITH LIGHTING ITEMS)

LEGEND CONTINUED

- S PROPOSED LIGHTING PULL (MLGW STANDARD) (INCLUDED WITH STRUCTURES ITEMS)
- PROPOSED JUNCTION BOX (6" X 6") (INCLUDED WITH STRUCTURES ITEMS)
- PROPOSED LIGHTING CONDUIT (2" PVC, SCHEDULE 40)
- 1 CONDUIT RUN NUMBER (SEE SHEET 57D)

BRIDGE NO. 79100400123

OVERPASS LIGHT POLE SCHEDULE

LIGHT POLE NO.	MOUNTING HEIGHT (FT)	BASELINE	STATION	OFFSET (FT)	SIDE
LP 113	35	CANADA RD	212+85.5	ON SIGNAL POLE	LT
LP 116	35	CANADA RD	213+13	ON SIGNAL POLE	RT

UNDERPASS LUMINAIRE SCHEDULE

HIGH MAST POLE NO.	MOUNTING HEIGHT (FT)	BASELINE	STATION	OFFSET (FT)	SIDE
UPL 1	17	I-40	498+93	ON BRIDGE WALL	LT
UPL 2	17	I-40	498+30	ON BRIDGE WALL	LT
UPL 3	17	I-40	497+65	ON BRIDGE WALL	LT
UPL 4	17	I-40	498+51	ON BRIDGE WALL	RT
UPL 5	17	I-40	497+77	ON BRIDGE WALL	RT
UPL 6	17	I-40	497+00	ON BRIDGE WALL	RT

ITEMS 714-01.01 L.S. - STRUCTURAL LIGHTING (BRIDGE NO. 79100400123) INCLUDES:

***A) 1010 L.F. OF 2" C (SCHEDULE 40 PVC)**
B) 16 - PARAPET JUNCTION BOXES (6" X 6")
C) 4 - PULL BOXES (MLGW STANDARD)

NOTE: SEAL AND COVER CONDUIT WITH TAPE.

*** INCLUDES APPROX. 470 LF OF CONDUIT INSTALLED IN THE BRIDGE PARAPET.**

SEALED BY

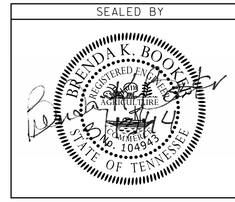

COORDINATES ARE NAD/83(1995) AND ARE DATUM ADJUSTED BY THE FACTOR OF 1.00000477 AND TIED TO THE TGRN.

STATE OF TENNESSEE
DEPARTMENT OF TRANSPORTATION

BRIDGE LIGHTING DETAILS (OVERPASS AND UNDERPASS)

CANADA ROAD BRIDGE AT I-40

SCALE: 1"= 50'

3/13/2014 2:34:36 PM C:\Users\BE-Beo\Desktop\Booker\01_ACTIVE\TDOT\E1616\SHELBY\04_I-40 AT CANADA RD LIGHTING\05_FINAL CONST DGN FILES\057M.SHT

TYPE	YEAR	PROJECT NO.	SHEET NO.
CONST.	2014	NH-I-40-1(283)20	57N

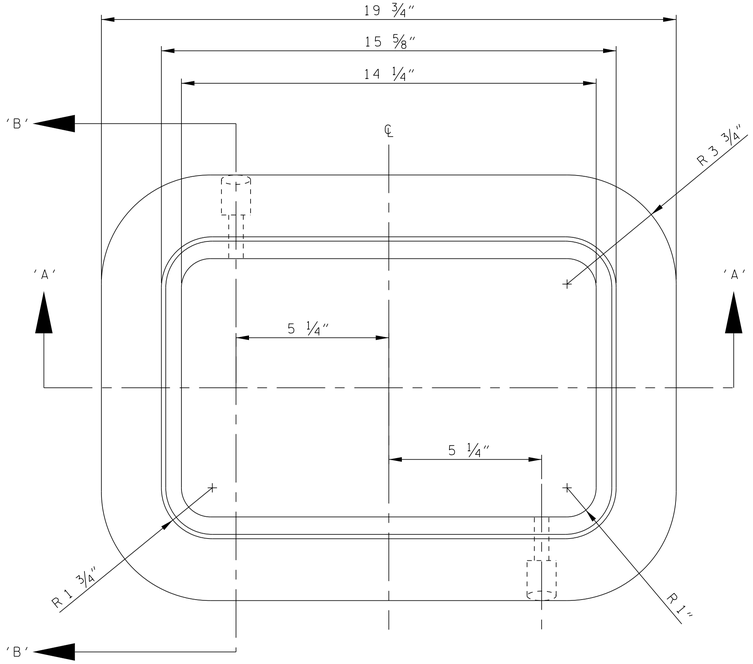

TOP VIEW
HANDHOLE
N.T.S.

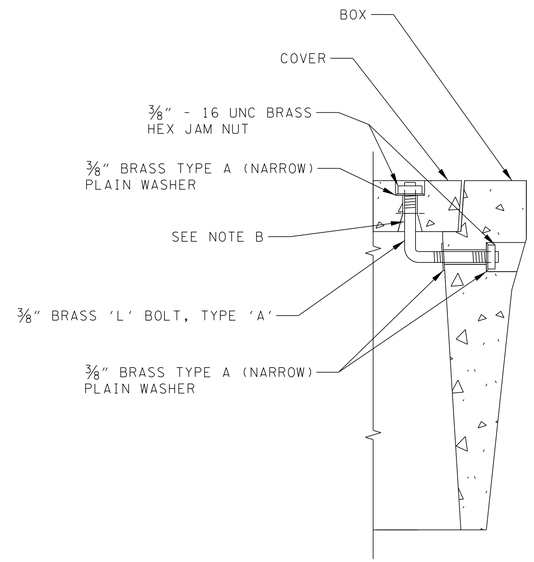

DETAIL 'A'
'L' BOLT ASSEMBLY

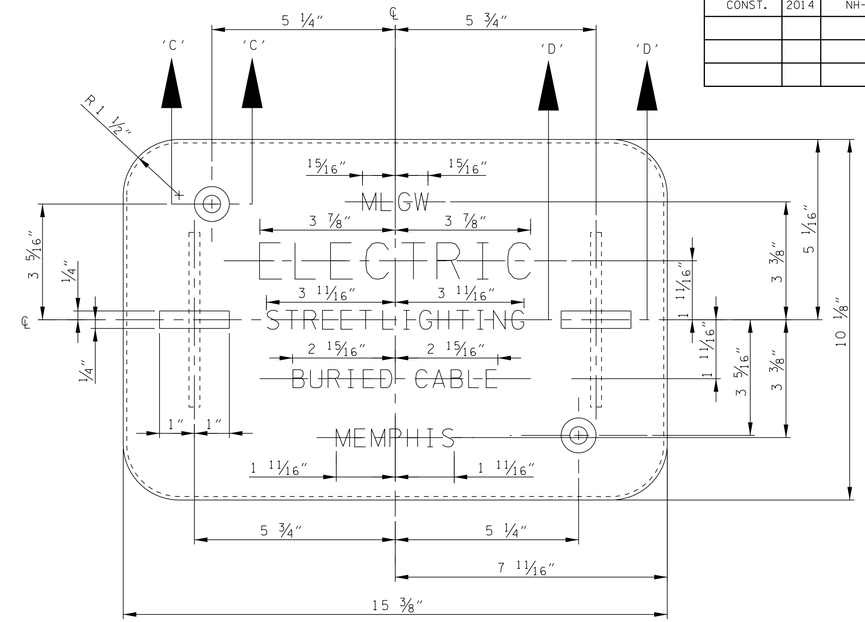

TOP VIEW
COVER
N.T.S.

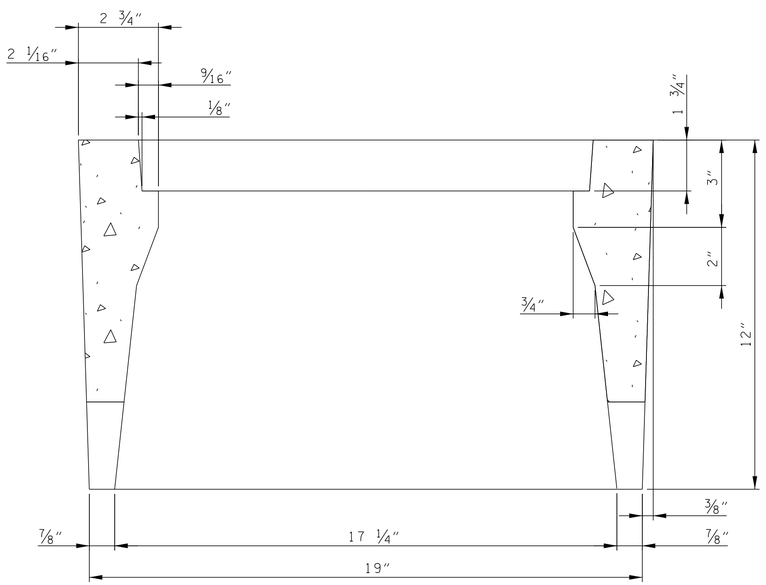

SECTION 'A' - 'A'
N.T.S.

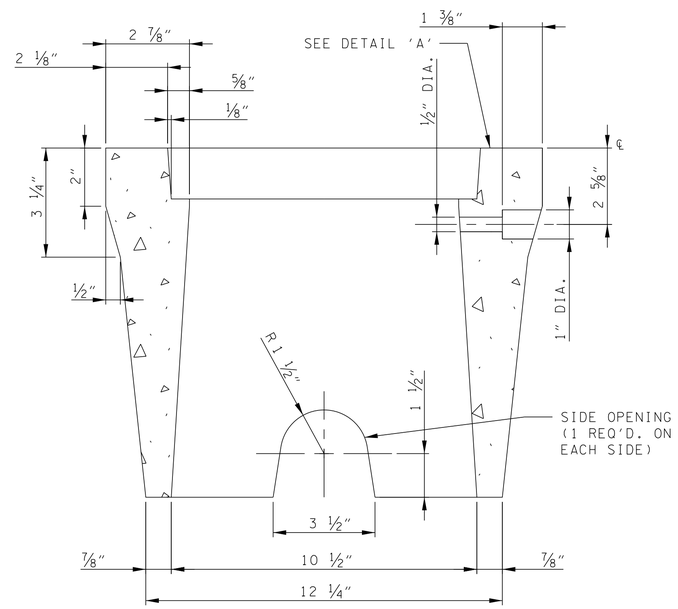

SECTION 'B' - 'B'
N.T.S.

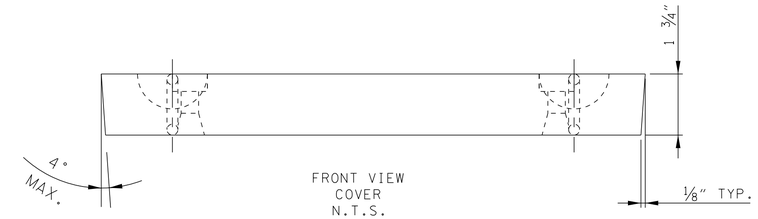

FRONT VIEW
COVER
N.T.S.

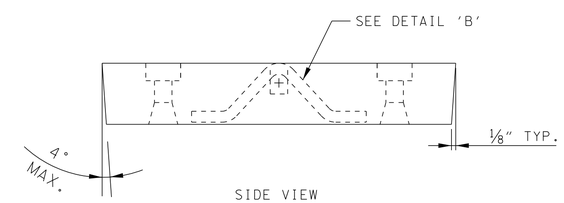

SIDE VIEW
COVER
N.T.S.

PRECAST CONCRETE
ELECTRIC STREET LIGHT
HANDHOLE
10 1/2" X 17 1/4" X 12"
WITH BOLT DOWN COVER
SHEET 1 OF 2

SEALED BY

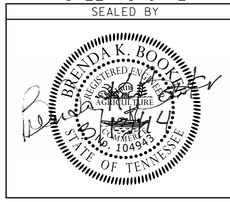

COORDINATES ARE NAD/83(1995)
AND ARE DATUM ADJUSTED BY
THE FACTOR OF 1.00000477
AND TIED TO THE TGRN.

STATE OF TENNESSEE
DEPARTMENT OF TRANSPORTATION

LIGHTING DETAILS

(MLGW STANDARDS)

GENERAL NOTES

(A) THE INFORMATION PROVIDED IN THIS STANDARD DRAWING IS EQUIVALENT TO MLGW STANDARD DRAWING 41-0250.

(B) WHEN SHIPPED, THE COVER SHALL BE SECURELY BOLTED DOWN IN THE HANDHOLE WITH 'L' BOLT ASSEMBLIES.

(C) WEIGHT:

COVER	-	17# APPROX.
HANDHOLE	-	60# APPROX.
TOTAL	-	77# APPROX.

3/13/2014 2:37:30 PM
c:\Users\BE-Beo\Desktop\Booker\01_ACTIVE\TDOT\E1616\SHELBY\04_I-40 AT CANADA RD LIGHTING\05_FINAL CONST DGN FILES\057N & 057P.SHT

TYPE	YEAR	PROJECT NO.	SHEET NO.
CONST.	2014	NH-I-40-1(283)20	57P

SPECIFICATIONS

MATERIAL: THE CEMENT SHALL BE TYPE I OR TYPE II IN ACCORDANCE WITH ASTM DESIGNATION: C 150, 'STANDARD SPECIFICATION FOR PORTLAND CEMENT' AS LAST REVISED. THE AGGREGATE SHALL BE LIGHTWEIGHT IN ACCORDANCE WITH ASTM DESIGNATION: C330, 'STANDARD SPECIFICATION FOR LIGHTWEIGHT AGGREGATES FOR STRUCTURAL CONCRETE' AS LAST REVISED. ALSO, THE MAXIMUM SIZE OF THE COARSE AGGREGATE SHALL NOT EXCEED 1/5 OF THE MINIMUM WALL DIMENSION. THE PLAIN STEEL WIRE SHALL BE IN ACCORDANCE WITH ASTM DESIGNATION: A 82, 'STANDARD SPECIFICATION FOR STEEL WIRE, PLAIN, FOR CONCRETE REINFORCEMENT' AS LAST REVISED OR MEMPHIS LIGHT, GAS AND WATER DIVISION APPROVED EQUAL. THE LIFT EYE FOR THE COVER SHALL BE COMPLETELY DIPPED IN A PROTECTIVE ZINC COATING APPLIED IN ACCORDANCE WITH ASTM DESIGNATION: A 153, 'STANDARD SPECIFICATION FOR ZINC COATING (HOT DIP) ON IRON AND STEEL HARDWARE' AS LAST REVISED OR MEMPHIS LIGHT, GAS AND WATER APPROVED EQUAL.

TOLERANCE: TOLERANCES SHALL BE HELD TO ± 1/16" OF THE DIMENSION SHOWN, EXCEPT WHEN INDICATED ON DRAWING, THEN THIS SHALL BE THE TOLERANCE THAT SHALL PREVAIL. DRAFT ANGLES SHALL NOT EXCEED 3 DEGREES UNLESS OTHERWISE SPECIFIED.

MANUFACTURING: TO ASSURE A TRUE LEVEL SURFACE AND A SMOOTH FINISH, BOTH PRODUCTS SHALL BE RAMMED IN METAL MOLDS AND BE SCREEDED OFF WITH A STRAIGHT EDGE. ALL TOP SURFACES OF THE HANDHOLES SHALL BE FLAT AND FINISHED SMOOTH. CORNERS AND EDGES SHALL BE ROUNDED. THE CONCRETE, AFTER CURING TO 90% OF ITS ULTIMATE STRENGTH, SHALL BE 4000 PSI.

MARKING: THE COVER SHALL HAVE LETTERING TO IDENTIFY OWNERSHIP, STREETLIGHT, BURIED CABLE AND CITY IN GOTHIC FACE WITH AN OVERALL HEIGHT OF 1/2" AND SUBDIVISION OF UTILITY WITH AN OVERALL HEIGHT OF 1" IN THE LOCATIONS AS SHOWN ON THE DRAWING.

ASSEMBLY: AFTER FABRICATION THE HANDHOLE SHALL HAVE TWO (2) 3/8" 'L' BOLTS, TYPE 'A', BRASS - BROOKS PRODUCTRS INCORPORATED CATALOG #PBOLTA. SIX (6) 3/8" TYPE A (NARROW) PLAIN WASHERS, BRASS (ANSI/ASME B(8.22.1) - BROOKS PRODUCTS, INCORPORATED CATALOG #PWASH2003 AND FOUR (4) 3/8" - 16 UNC HEX JAM NUTS, BRASS - BROOKS PRODUCTS, INCORPORATED CATALOG #PNUT2002 INSTALLED IN THE LOCATION SHOWN ON THE DRAWING.

INSPECTION: MEMPHIS LIGHT, GAS AND WATER DIVISION RESERVES THE RIGHT TO REJECT ANY HANDHOLE THAT EXHIBITS A STRUCTURAL CRACK THAT WOULD IN THE OPINION OF THE DIVISION REPRESENTATIVE WEAKEN THE TOTAL ASSEMBLY. FAILURE TO MEET ANY ASPECT OF THESE SPECIFICATIONS WILL CONSTITUTE CAUSE FOR REJECTION.

SHIPPING: THE HANDHOLE AND COVER SHALL BE SHIPPED AS A COMPLETE UNIT WITH THE COVER SECURELY BOLTED DOWN IN THE HANDHOLE WITH THE 'L' BOLT ASSEMBLIES. EACH UNIT SHALL BE STACKED AND BANDED ON A PALLET AND MARKED WITH THE FOLLOWING INFORMATION.

MANUFACTURER'S NAME
MANUFACTURER'S CATALOG NUMBER
MEMPHIS LIGHT, GAS AND WATER DIVISION
CLASS-ITEM #43-0250
PRECRAST CONCRETE
ELECTRIC STREET LIGHT HANDHOLE
10 1/2" X 17 1/4" X 12"
WITH BOLT DOWN COVER
QUANTITY: _____

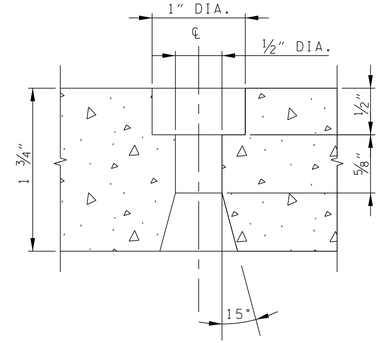

SECTION 'C' - 'C'

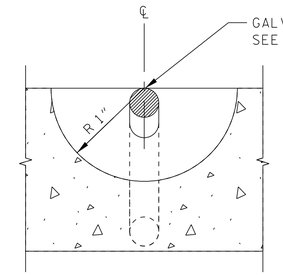

SECTION 'D' - 'D'

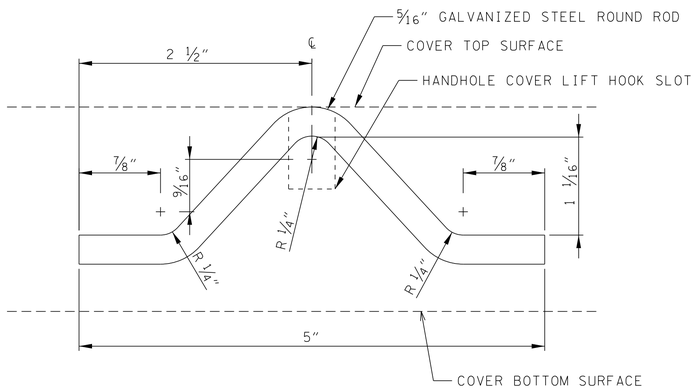

DETAIL 'B'
GALVANIZED LIFT EYE

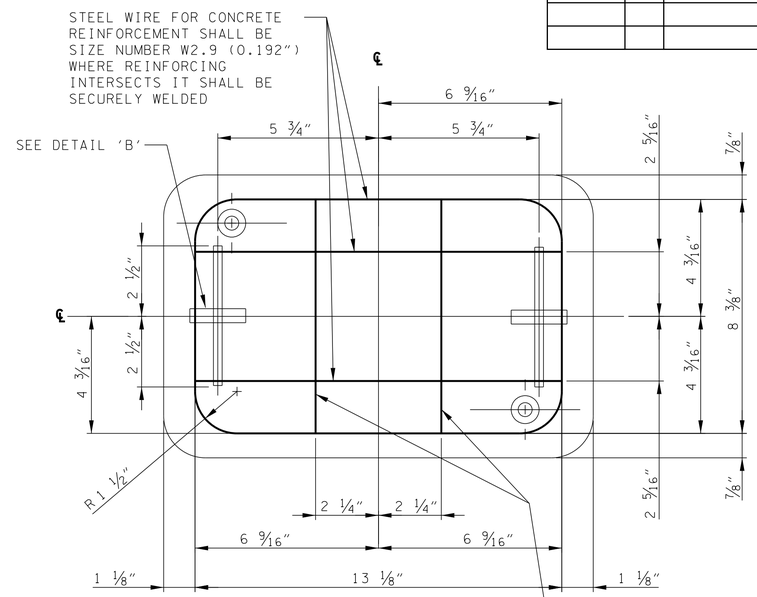

TOP VIEW
COVER
CONCRETE REINFORCEMENT
N.T.S.

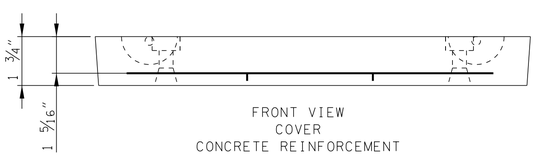

FRONT VIEW
COVER
CONCRETE REINFORCEMENT
N.T.S.

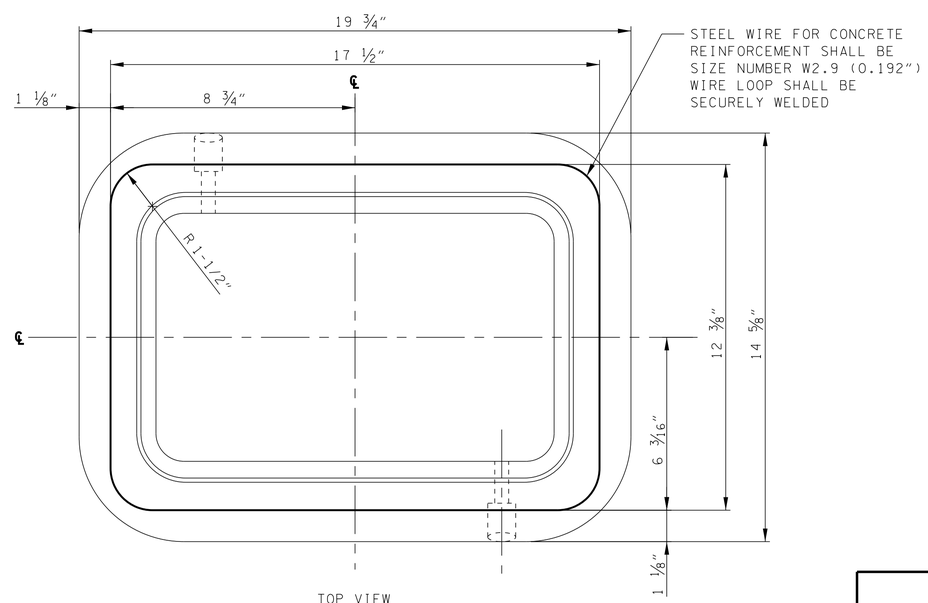

TOP VIEW
HANDHOLE
CONCRETE REINFORCEMENT
N.T.S.

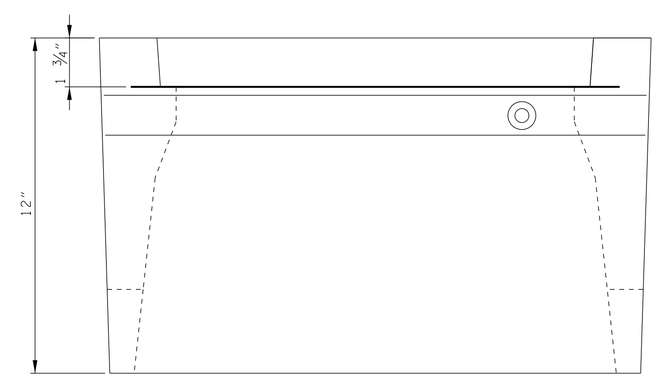

FRONT VIEW
HANDHOLE
CONCRETE REINFORCEMENT
N.T.S.

PRECAST CONCRETE
ELECTRIC STREET LIGHT
HANDHOLE
10 1/2" X 17 1/4" X 12"
WITH BOLT DOWN COVER
SHEET 2 OF 2

SEALED BY

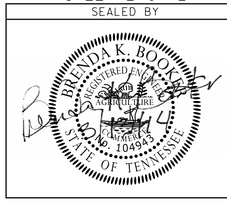

COORDINATES ARE NAD/83(1995) AND ARE DATUM ADJUSTED BY THE FACTOR OF 1.00000477 AND TIED TO THE TGRN.

STATE OF TENNESSEE
DEPARTMENT OF TRANSPORTATION

LIGHTING DETAILS

(MLGW STANDARDS)

GENERAL NOTES

(A) THE INFORMATION PROVIDED IN THIS STANDARD DRAWING IS EQUIVALENT TO MLGW STANDARD DRAWING 41-0250.

3/13/2014 2:38:13 PM
C:\Users\BE-Beo\Desktop\Booker\01_ACTIVE\TDOT\E166\SHELBY\04_I-40 AT CANADA RD LIGHTING\05_FINAL CONST DGN FILES\057N & 057P.SHT

TYPE	YEAR	PROJECT NO.	SHEET NO.
CONST.	2014	NH-I-40-1(283)20	570

SPECIFICATIONS

MATERIAL: THE COVER SHALL BE MANUFACTURED FROM FIBERGLASS REINFORCED POLYMER CONCRETE CONSISTING OF ULTRAVIOLET INHIBITED RESIN (20% MINIMUM), CATALYTIC HARDENER, FIBERGLASS MATTING, AND COURSE, MEDIUM, FINE AND VERY FINE SAND.

TOLERANCE: TOLERANCES SHALL BE HELD TO ± 1/16" OR ± 1% OF THE DIMENSION SHOWN ON THE DRAWING WHICHEVER OF THE TWO BEING THE LARGER UNLESS TOLERANCES ARE STIPULATED ON THE DRAWING. DRAFT ANGLES SHALL NOT EXCEED 3 DEGREES UNLESS OTHERWISE SPECIFIED.

MANUFACTURING: THE COVER SHALL BE POURED IN A METAL MOLD TO INSURE COMPLIANCE WITH THE STIPULATED TOLERANCES. ALL EDGES SHALL BE SMOOTH AND ROUNDED, FREE OF PROTRUSIONS AND/OR SHARP SURFACES. THE TOP SURFACE SHALL BE TEXTURED TO PROVIDE A 'NON-SKID' SURFACE FOR PEDESTRIAN TRAFFIC. THE NAME OF THE MANUFACTURER, DATE OF MANUFACTURE AND DIMENSIONS OF THE COVER SHALL BE PERMANENTLY MARKED ON THE UNDERSIDE OF THE COVER.

IMPACT AND LOAD BEARING STRENGTH: PROOF OF DESIGN TESTING: THE COVER SHALL BE TESTED FOR IMPACT AND LOAD BEARING STRENGTH. THE COVER SHALL BE IMPACT TESTED AND WITHSTAND 70 FT.-LBS IMPACT ADMINISTERED WITH A 12 POUND, 'B' TUP IN ACCORDANCE WITH ASTM D 2444, 'STANDARD TEST METHOD FOR IMPACT RESISTANCE WITH THERMOPLASTIC PIPE AND FITTINGS BY MEANS OF A TUP (FALLING WEIGHT)', WHILE RESTING UPON A FLAT RIGID SURFACE (CONCRETE OR ONE (1) INCH THICK STEEL PLATE). THE COVER SHALL THEN BE PLACED IN A STEEL FIXTURE SUPPORTING THE ON ALL EDGES BY 9/16". A LOAD SHALL BE APPLIED ON THE CENTER OF THE COVER BY AN 8" X 8" X 1" STEEL PLATE; A 1/2 INCH THICK NEOPRENE PAD AND A SPHERICALLY SEATED BEARING SALL BE USED TO INSURE UNIFORM DISTRIBUTION OF LOAD. A LOAD OF 16,000 POUNDS SHALL BE APPLIED AND REMOVED AT A UNIFORM RATE FOR 10 CYCLES. THE LOAD BEARING STRENGTH OF THE COVER SHALL BE 20,000 POUNDS. THE TEST SHALL BE WITNESSED BY, AND TEST REPORTS CERTIFIED BY, A PROFESSIONAL ENGINEER REGEISTRED IN THE STATE OF TESTING. THE TEST REPORTS INDICATING THE DESCRIPTION OF THE COVER, MANUFACTURERE, TEST FACILITY, EQUIPMENT OPERATOR, LOCTION(S) OF FAILURE AND ULTIMATE STRENGTH OF THE COVER SHALL BE SUBMITTED AT THE TIME OF BIDS. IN THE EVENT OF A DESIGN CHANGE, THE REQUIREMENTS DESCRIBED IN THIS PARAGRAPH SHALL BE PERFORMED ON THE NEW DESIGN.

PRODUCTION TESTING: THE MANUFACTURER SHALL TEST AN ADEQUATE NUMBER OF COVERS, SUPPLIED TO MLGW, TO INSURE COMPLIANCE WITH THE IMPACT AND LOAD BEARING STRENGTH REQUIREMENTS AS STATED IN THE PRECEEDING PARAGRAPH.

INSPECTION: MEMPHIS LIGHT, GAS AND WATER DIVISION RESERVES THE RIGHT TO REJECT ANY COVER THAT EXHIBITS A DEVIATION FROM THIS MATERIAL STANDARD. AN ENTIRE LOT MAY BE REJECTED IN THE EVENT THAT ANY COVER IN THE SHIPMENT DOES NOT MEET THE LOAD BEARING REUIREMENTS WHEN TESTED AT MLGW.

SHIPPING: THE COVER SHALL BE SHIPPED STACKED AND BANDED ON A PALLET AND MARKED WITH THE FOLLOWING INFORMATION:

MANUFACTURER'S NAME
MANUFACTURER'S CATALOG NUMBER
MEMPHIS LIGHT, GAS AND WATER DIVISION
CLASS-ITEM #41-1249
POLYMER CONCRETE, EXTRA STRENGTH
BOLT DOWN COVER
10 1/8" X 15 3/8" X 1 3/4"
FOR ELECTRIC STREET LIGHT HANDHOLE
QUANTITY: _____

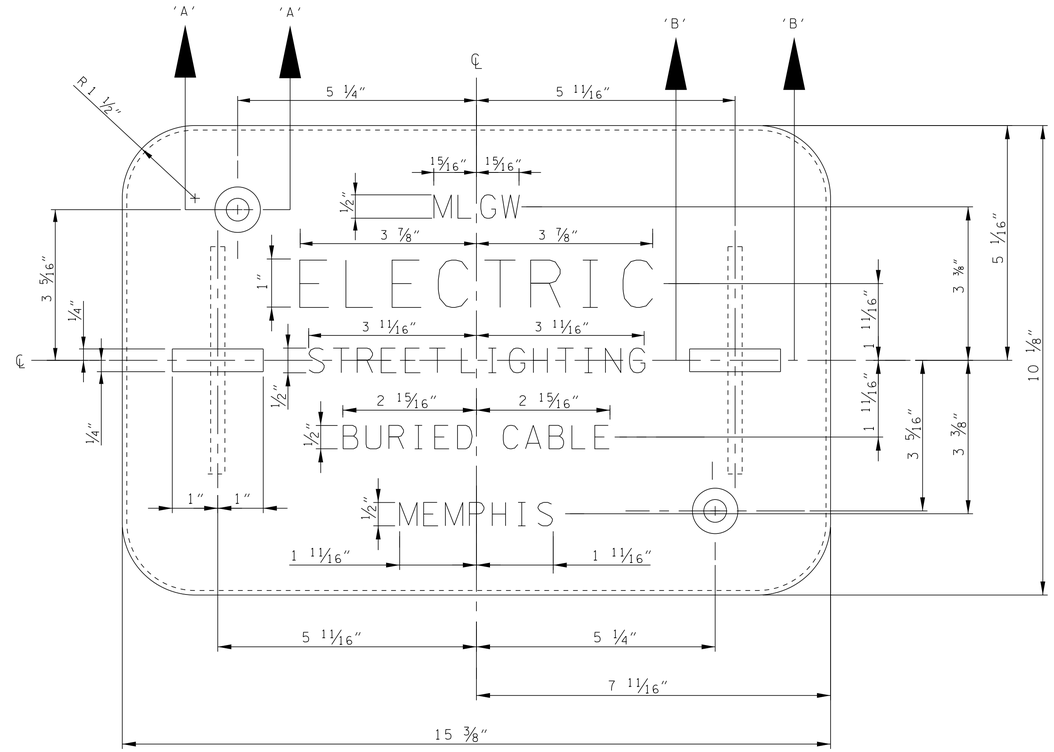

TOP VIEW
COVER
N.T.S.

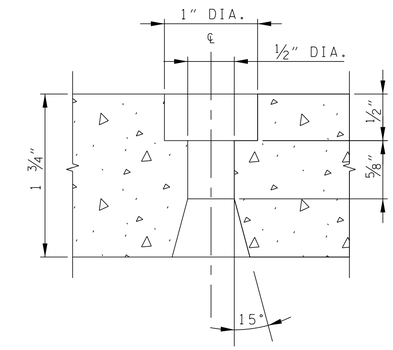

SECTION 'A' - 'A'

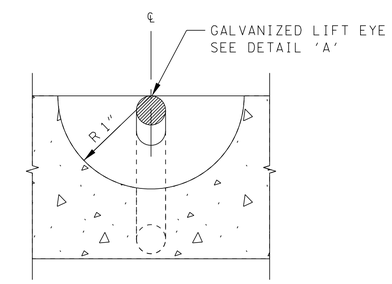

SECTION 'B' - 'B'

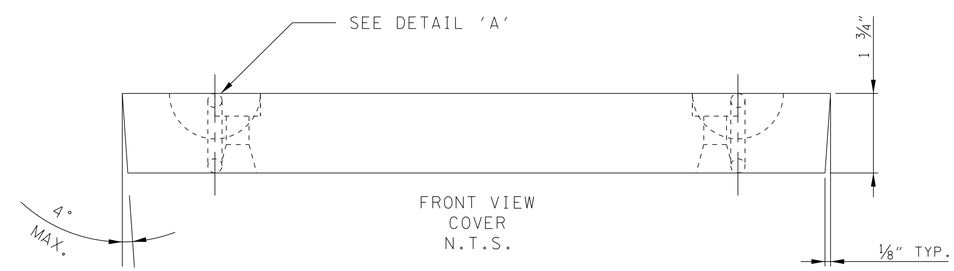

FRONT VIEW
COVER
N.T.S.

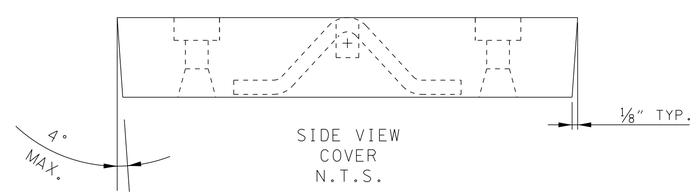

SIDE VIEW
COVER
N.T.S.

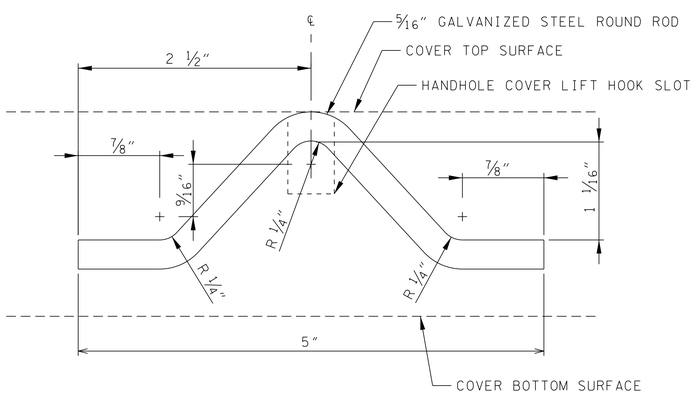

DETAIL 'A'
GALVANIZED LIFT EYE

POLYMER CONCRETE,
EXTRA STRENGTH
BOLT DOWN COVER
10⅛" X 15⅜" X 1¾"
ELECTRIC STREET
LIGHT HANDHOLE

SEALED BY

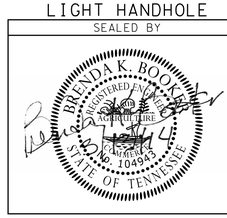

GENERAL NOTES

(A) THE INFORMATION PROVIDED IN THIS STANDARD DRAWING IS EQUIVALENT TO MLGW STANDARD DRAWING 41-1249.

STATE OF TENNESSEE
DEPARTMENT OF TRANSPORTATION

LIGHTING DETAILS

(MLGW STANDARDS)

3/13/2014 2:41:30 PM
C:\Users\BE-Bea\Desktop\Booker\01_ACTIVE\TDOT\E166\SHELBY\04_I-40 AT CANADA RD LIGHTING\05_FINAL CONST DGN FILES\0570.SHT

TYPE	YEAR	PROJECT NO.	SHEET NO.
CONST.	2014	NH-I-40-1(283)20	57R

SPECIFICATIONS

MATERIAL: THE BRACKET SHALL BE MADE OF 2" NOMINAL PIPE SIZE, SCHEDULE NO. 40 STEEL PIPE, TYPE S OR E, GRADE A IN ACCORDANCE WITH ASTM DESIGNATION: A 53, "STANDARD SPECIFICATION FOR PIPE, STEEL, BLACK AND HOT-DIPPED, ZINC COATED WELDED AND SEAMLESS" AS LAST REVISED. THE 3/8" X 2" AND 3/8" X 1" X 3" BAR STRUTS AND 3/8" X 5 1/4" SIMPLEX ATTACHMENTS SHALL BE MADE OF HOT-WROUGHT SPECIAL QUALITY CARBON STEEL BAR AND SHALL MEET OR EXCEED THE REQUIREMENTS OF ASTM DESIGNATION: A 576, "STANDARD SPECIFICATION FOR STEEL BARS, CARBON, HOT-WROUGHT, SPECIAL QUALITY" AS LAST REVISED. ONE (1) SOLID (BLIND & PLUG) RUBBER OR NEPRENE GROMMET HAVING A FULL MEMBRANE FOR A 1" DIA. HOLE WITH A 1 1/2" OUTSIDE DIAMETER.

TOLERANCE: ALL TOLERANCES SHALL BE ±1/16" UNLESS OTHERWISE SPECIFIED.

FABRICATION: ALL WELDS SHALL MEET OR EXCEED ANSI/AWS D1.1 "STRUCTURAL WELDING-CODE STEEL", SECTION 9.25 AS TO THE QUALITY OF WELDS. THE WELD STRENGTH SHALL BE EQUAL TO OR GREATER THAN THE MATERIAL BEING WELDED.

FINISH: AFTER FABRICATION, THE BRACKET SHALL BE COMPLETELY DIPPED IN A PROTECTIVE ZINC COATING APPLIED IN ACCORDANCE WITH ASTM DESIGNATION: A 123, "STANDARD SPECIFIATION FOR ZINC (HOT-DIP GALVANIZED) COATINGS ON IRON AND STEEL PRODUCTS" AS LAST REVISED.

HARDWARE: THE BRACKET HARDWARE SHALL CONSIST OF FOUR (4) 1/2" - 13 X 1 1/2" UNC FINISHED HEX BOLTS, STAINLESS STEEL 304 ALLOY (18-8) (ANSI/ASME B18.2.1), FOUR (4) 1/2" SAE DESIGNATE NARROW "N" TYPE A PLAIN WASHERS, STAINLESS STEEL 304 ALLOY (18-8) (ANSI/ASME B18.22.1) AND FOUR (4) 1/2" REGULAR HELICAL SPRING LOCK WASHERS, STAINLESS STEEL 304 ALLOY (18-8) (ANSI/ASME B 18.21.1).

CERTIFICATION: A CERTIFIED HEAT LOT TEST REPORT SHALL BE FURNISHED COVERING THE MATERIAL USED IN EACH BRACKET. ALL WELDS SHALL BE TESTED FOR PENETRATION AND A CERTIFIED WELD TEST REPORT SHALL BE FURNISHED.

SHIPPING: THE HARDWARE SHALL BE PACKAGED IN A 4 MIL CLEAR POLYETHYLENE PLASTIC BAG. ALL THE BAGGED HARDWARE SHALL BE PACKAGED IN A PRE-APPROVED RECLOSABLE WEATHERPROOF (NON-PAPER) CONTAINER. THE BRACKETS AND THE HARDWARE CONTAINER SHALL BE SHIPPED AND MARKED WITH THE FOLLOWING INFORMATION:

MANUFACTURER'S NAME
MANUFACTURER'S CATALOG NUMBER
MEMPHIS LIGHT, GAS AND WATER DIVISION
CLASS-ITEM #43-0638
15' TRUSS TYPE STEEL
LUMINAIRE SUPPORT WITH
SIMPLEX FITTINGS FOR USE WITH
38' STEEL EXPRESSWAY POLE
(GALVANIZED)
QUANTITY: _____

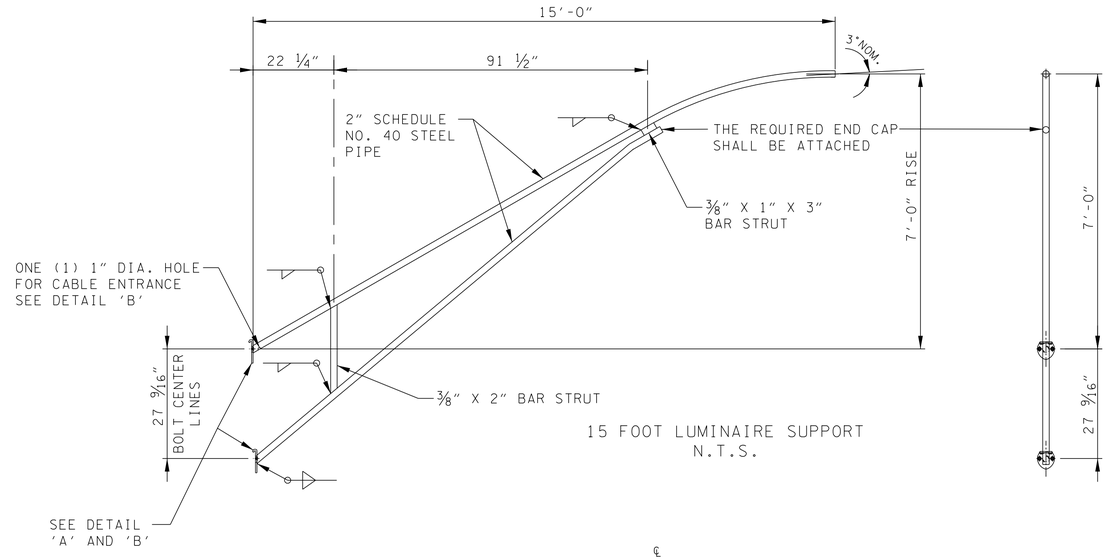

15 FOOT LUMINAIRE SUPPORT
N.T.S.

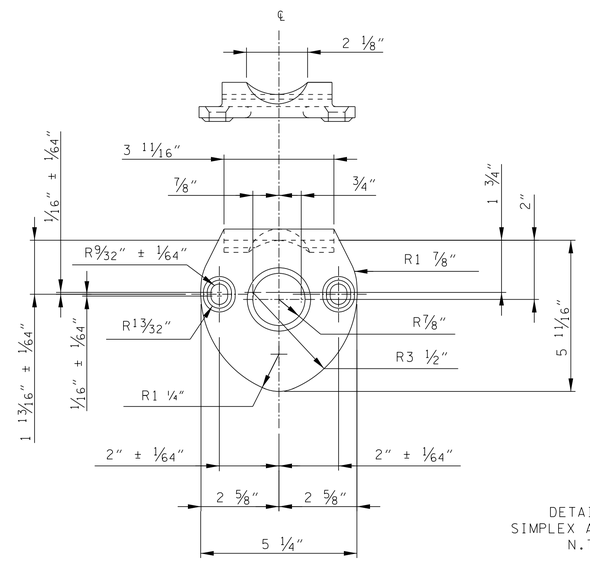

DETAIL 'A'
SIMPLEX ATTACHMENT
N.T.S.

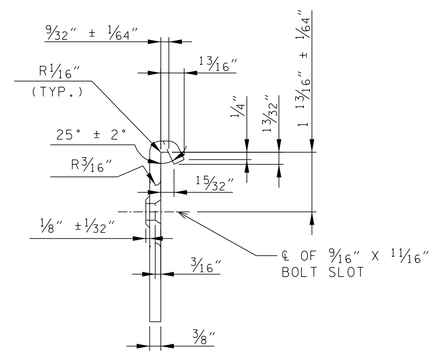

15 FOOT TRUSS TYPE
STEEL LUMINAIRE SUPPORT
WITH SIMPLEX FITTINGS
FOR USE WITH
THIRTY-EIGHT FOOT
STEEL EXPRESSWAY POLE
(GALVANIZED)

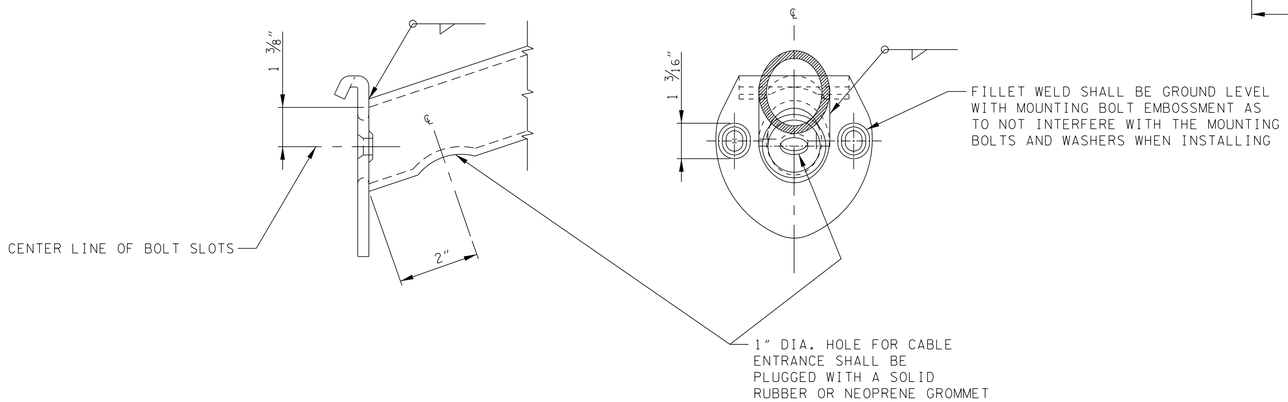

DETAIL 'B'
SUPPORT ARM SIMPLEX ATTACHMENTS
AND LOCATION OF CABLE ENTRANCE

MATERIAL SPECIFICATIONS	
PLATE AND BAR	ASTM - A 36
PIPE	ASTM - A 501
SIMPLEX ATTACHMENT	ASTM - 576
STRUCTURE FINISH	GALVANIZE TO ASTM - A 123
HARDWARE FINISH	GALVANIZE TO ASTM - A 153

GENERAL NOTES

(A) THE INFORMATION PROVIDED IN THIS STANDARD DRAWING IS EQUIVALENT TO MLGW STANDARD DRAWING 43-0638.

SEALED BY

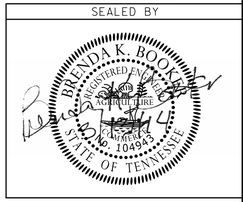

STATE OF TENNESSEE
DEPARTMENT OF TRANSPORTATION

LIGHTING DETAILS

(MLGW STANDARDS)

3/13/2014 2:44:4 PM
C:\Users\BE-Beo\Desktop\Booker\01_ACTIVE\TDOT\E1G16\SHELBY\04_I-40 AT CANADA RD LIGHTING\05_FINAL CONST DGN FILES\057R.SHT

TYPE	YEAR	PROJECT NO.	SHEET NO.
CONST.	2014	NH-I-40-1(283)20	57S

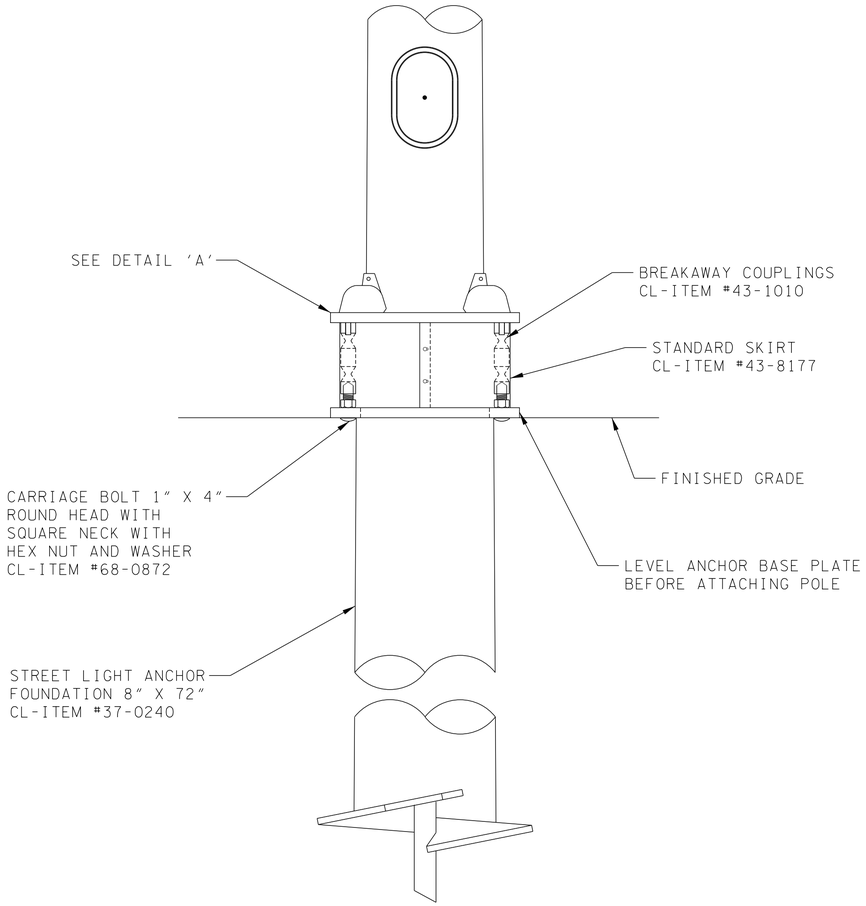

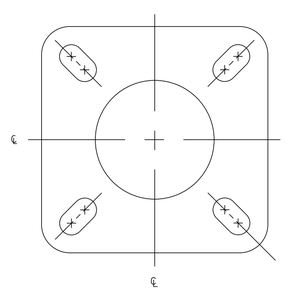

DETAIL 'A'
BASE PLATE OF POLE
N.T.S.

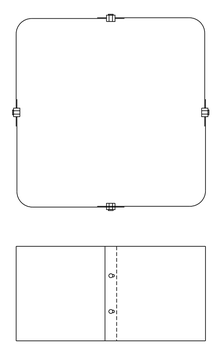

DETAIL 'B'
FRONT VIEW STANDARD SKIRT

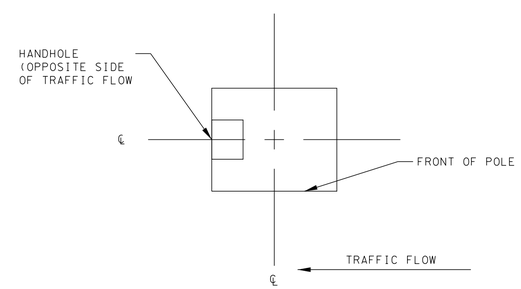

DETAIL 'D'

GALVANIZED STEEL
POLE INSTALLATION
WITH BREAKAWAY
COUPLINGS

SEALED BY

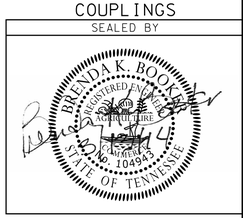

GENERAL NOTES

(A) THE INFORMATION PROVIDED IN THIS STANDARD IS TO SHOW THE RELATIONSHIP OF THE VARIOUS COMPONENTS OF A GALVANIZED STEEL POLE INSTALLATION WITH BREAKAWAY COUPLINGS AND IS A COMPILATION OF MLGW MATERIAL CLASS & ITEM NUMBERS 43-1010, 43-8177, 68-0872 & 37-0240.

STATE OF TENNESSEE
DEPARTMENT OF TRANSPORTATION

LIGHTING DETAILS

(MLGW STANDARDS)

3/13/2014 2:44:57 PM
C:\Users\BE-Bea\Desktop\Booker\01_ACTIVE\TDOT\E1616\SHELBY\04_I-40 AT CANADA RD LIGHTING\05_FINAL CONST DGN FILES\057S.SHT

TYPE	YEAR	PROJECT NO.	SHEET NO.
CONST.	2014	NH-I-40-1(283)20	57T

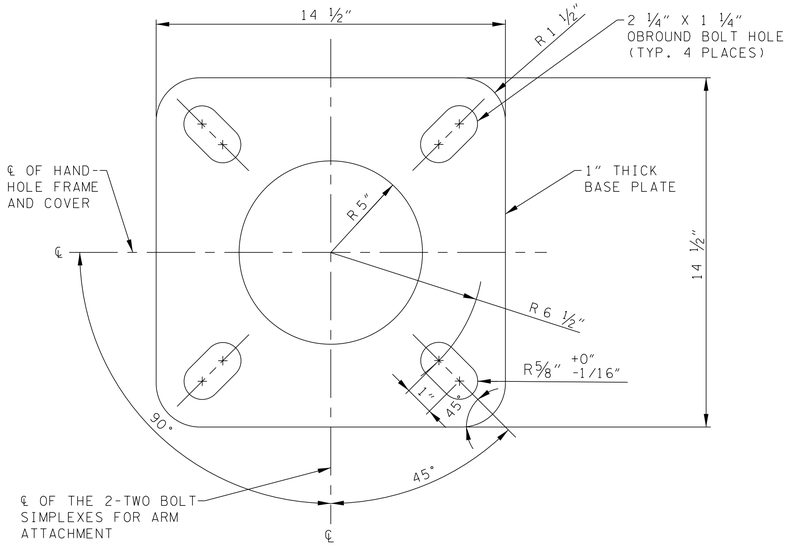

DETAIL 'A'
BASE PLATE/LOCATIONS FOR HANDHOLE AND 2-TWO BOLT SIMPLEXES FOR ARM ATTACHMENT
N.T.S.

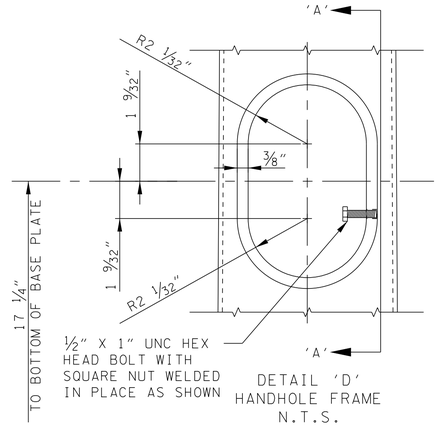

DETAIL 'D'
HANDHOLE FRAME
N.T.S.

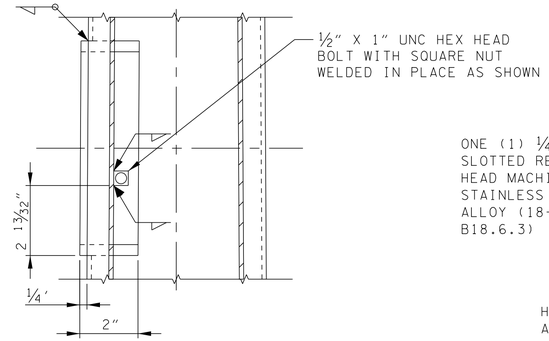

SECTION 'A' - 'A'
N.T.S.

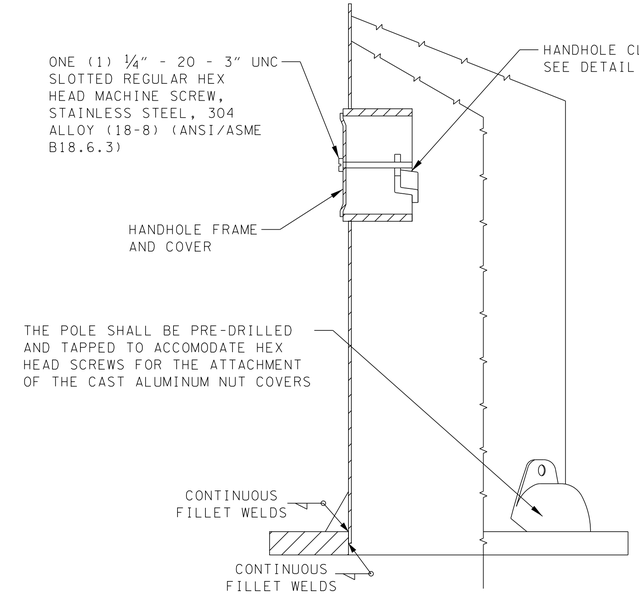

DETAIL 'B'
SECTION/SIDE VIEW
N.T.S.

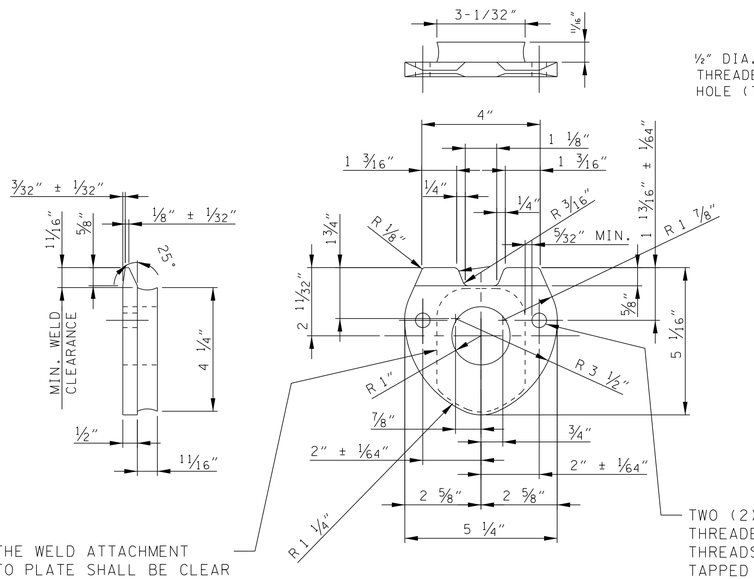

DETAIL 'G'
TWO BOLT SIMPLEX FOR ARM ATTACHMENT
N.T.S.

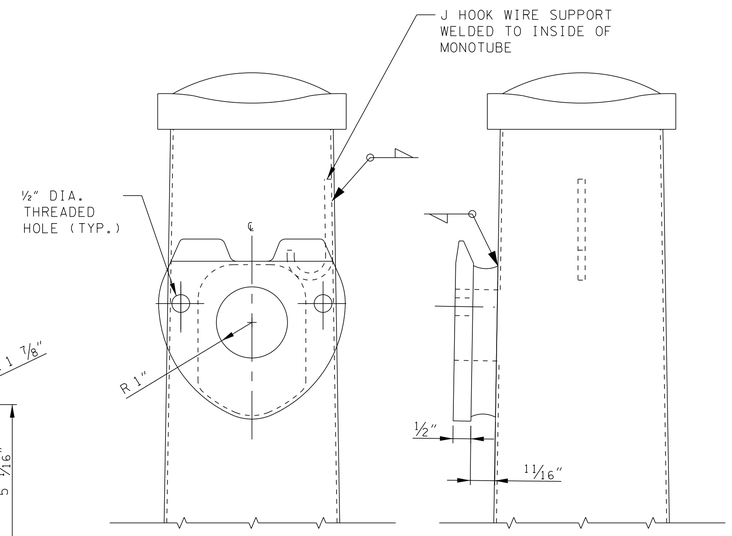

DETAIL 'C'
TWO BOLT SIMPLEX FOR ARM ATTACHMENT AND J-HOOK
N.T.S.

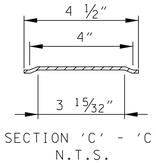

SECTION 'C' - 'C'
N.T.S.

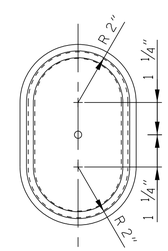

REAR VIEW

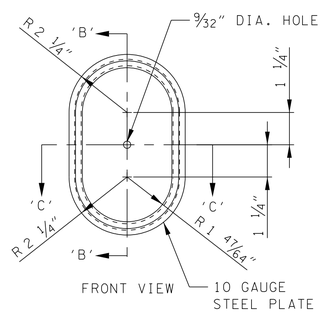

FRONT VIEW

DETAIL 'F'
HANDHOLE COVER
N.T.S.

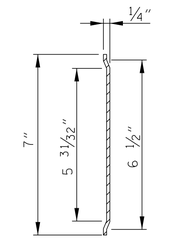

SECTION 'B' - 'B'
N.T.S.

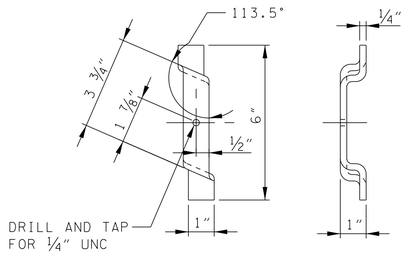

DETAIL 'E'
HANDHOLE COVER CLAMP
N.T.S.

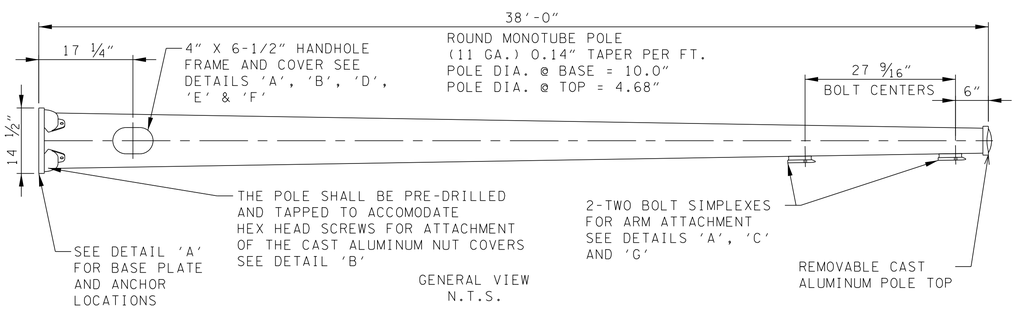

GENERAL VIEW
N.T.S.

MATERIAL SPECIFICATIONS	
MONOTUBE	ASTM - A 595 GRADE A
PLATE AND BAR	ASTM - A 36
POLE TOP & NUT COVERS	ASTM - B 26 (356 OR 43 ALLOY)
ANCHOR BOLTS	ASTM - A 675 GRADE 90
STRUCTURE FINISH	GALVANIZE TO ASTM - A 123
HARDWARE FINISH	GALVANIZE TO ASTM - A 153

GENERAL NOTES

(A) THE INFORMATION PROVIDED IN THIS STANDARD DRAWING IS EQUIVALENT TO MLGW STANDARD DRAWING 43-8638.

THIRTY-EIGHT FOOT GALVANIZED STEEL EXPRESSWAY LIGHTING POLE WITH SINGLE ARM ATTACHEMENTS

SEALED BY

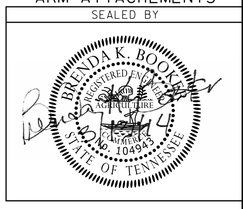

STATE OF TENNESSEE
DEPARTMENT OF TRANSPORTATION

LIGHTING DETAILS

(MLGW STANDARDS)

3/13/2014 2:45:47 PM
C:\Users\BE-Beo\Desktop\Booker\01_ACTIVE\TDOT\E1616\SHELBY\04_I-40 AT CANADA RD LIGHTING\05_FINAL CONST DGN FILES\057T.SHT

TYPE	YEAR	PROJECT NO.	SHEET NO.
CONST.	2014	NH-I-40-1(283)20	57U

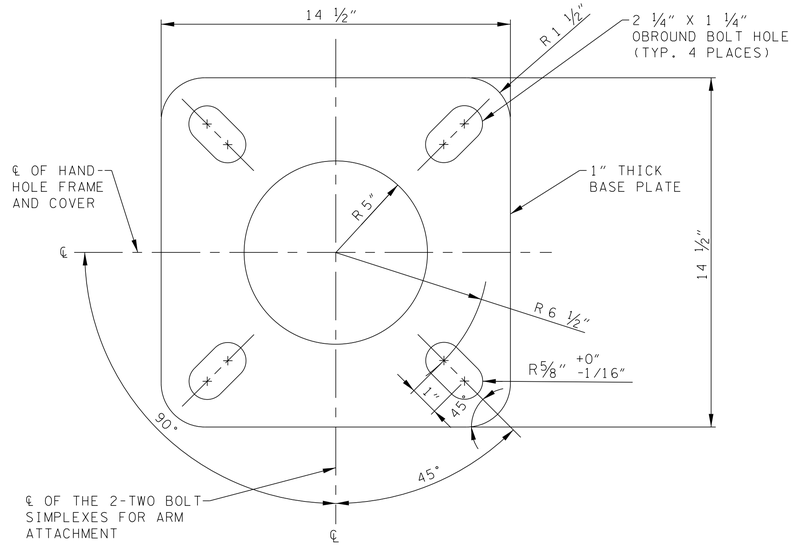

DETAIL 'A'
BASE PLATE/LOCATIONS FOR HANDHOLE AND 2-TWO BOLT SIMPLEXES FOR ARM ATTACHMENT
N.T.S.

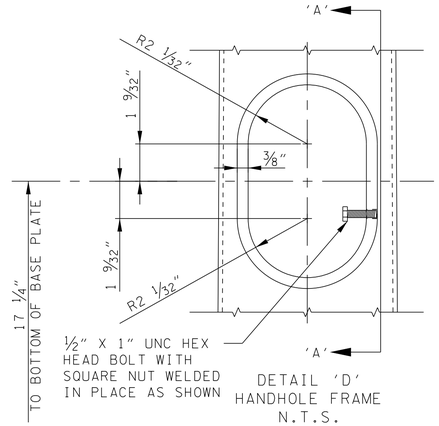

DETAIL 'D'
HANDHOLE FRAME
N.T.S.

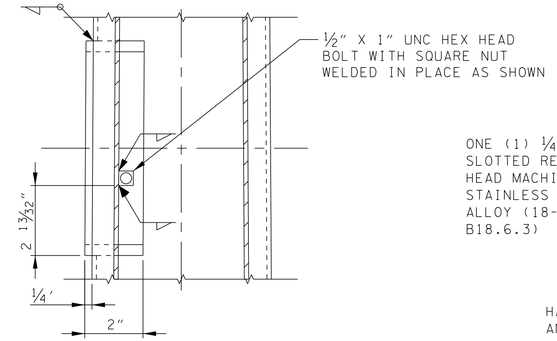

SECTION 'A' - 'A'
N.T.S.

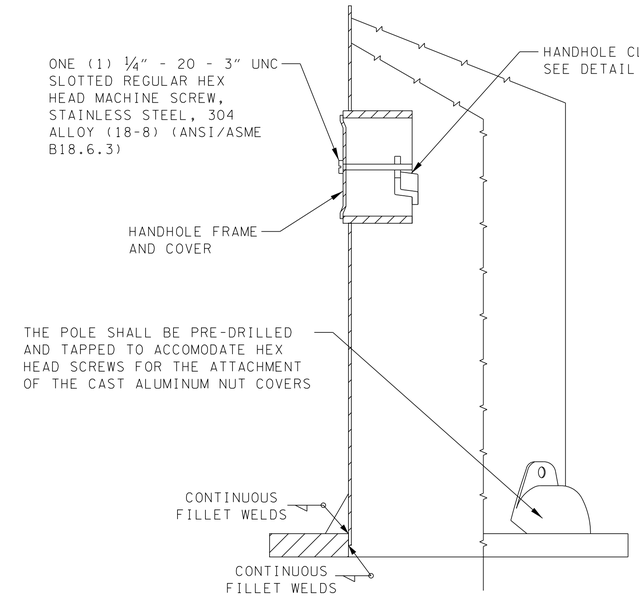

DETAIL 'B'
SECTION/SIDE VIEW
N.T.S.

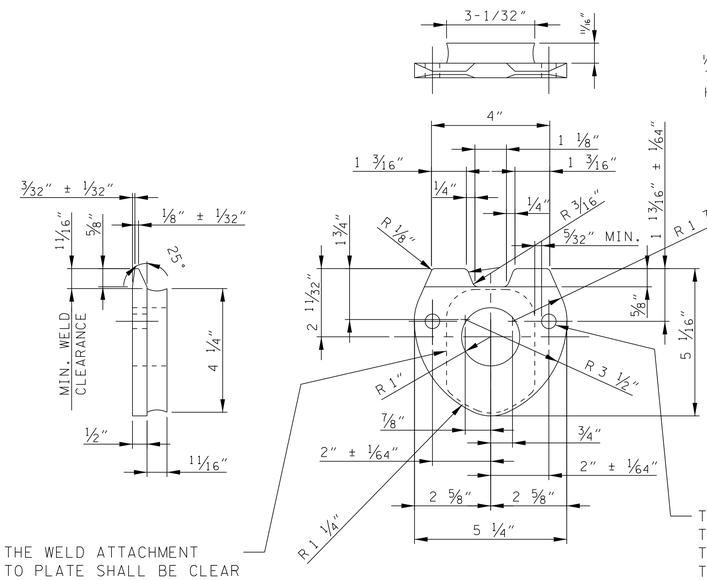

THE WELD ATTACHMENT TO PLATE SHALL BE CLEAR OF THE TWO (2) THREADED HOLES

TWO (2) ½" - 13 UNC THREADED HOLES, THREADS SHALL BE RE-TAPPED AFTER FINISH IS APPLIED

DETAIL 'G'
TWO BOLT SIMPLEX FOR ARM ATTACHMENT
N.T.S.

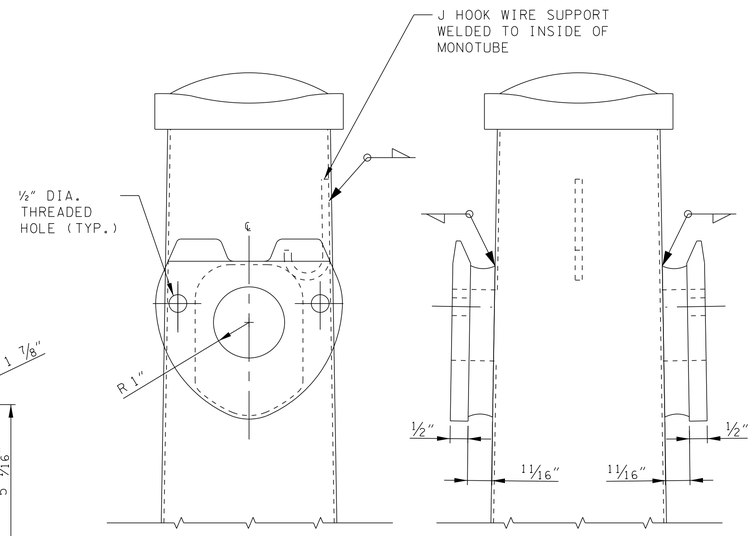

DETAIL 'C'
2-TWO BOLT SIMPLEX FOR ARM ATTACHMENT AND J-HOOK
N.T.S.

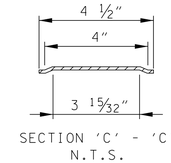

SECTION 'C' - 'C'
N.T.S.

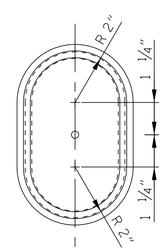

REAR VIEW

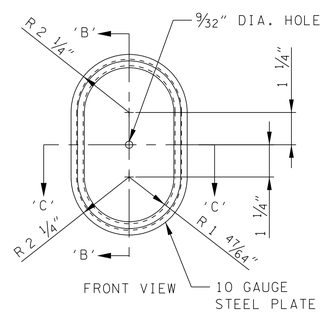

FRONT VIEW

DETAIL 'F'
HANDHOLE COVER
N.T.S.

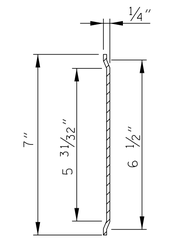

SECTION 'B' - 'B'
N.T.S.

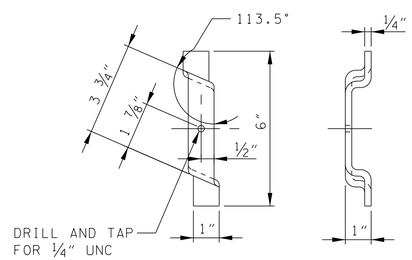

DETAIL 'E'
HANDHOLE COVER CLAMP
N.T.S.

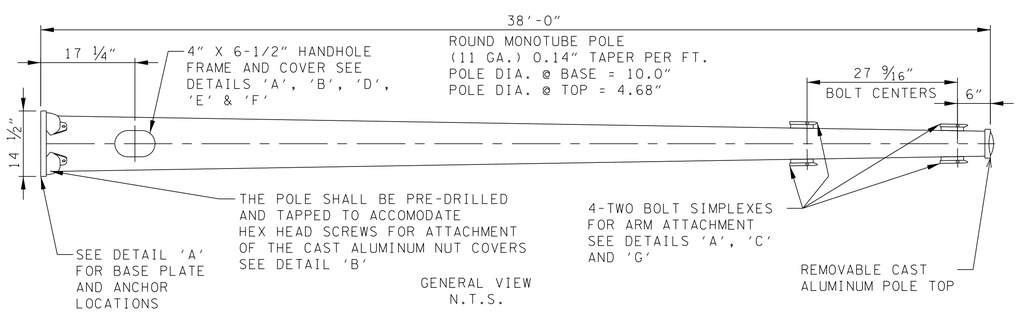

GENERAL VIEW
N.T.S.

MATERIAL SPECIFICATIONS	
MONOTUBE	ASTM - A 595 GRADE A
PLATE AND BAR	ASTM - A 36
POLE TOP & NUT COVERS	ASTM - B 26 (356 OR 43 ALLOY)
ANCHOR BOLTS	ASTM - A 675 GRADE 90
STRUCTURE FINISH	GALVANIZE TO ASTM - A 123
HARDWARE FINISH	GALVANIZE TO ASTM - A 153

GENERAL NOTES

(A) THE INFORMATION PROVIDED IN THIS STANDARD DRAWING IS EQUIVALENT TO MLGW STANDARD DRAWING 43-8639.

THIRTY-EIGHT FOOT GALVANIZED STEEL EXPRESSWAY LIGHTING POLE WITH DOUBLE ARM ATTACHEMENTS

SEALED BY

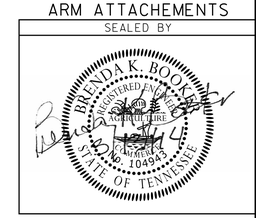

STATE OF TENNESSEE
DEPARTMENT OF TRANSPORTATION

LIGHTING DETAILS

(MLGW STANDARDS)

3/13/2014 2:46:46 PM
C:\Users\BE-Beo\Desktop\Booker\01_ACTIVE\TDOT\E1616\SHELBY\04_I-40 AT CANADA RD LIGHTING\05_FINAL CONST DGN FILES\057U.SHT

TYPE	YEAR	PROJECT NO.	SHEET NO.
CONST.	2014	NH-I-40-1(283)20	57V

DETAIL 'A'
CONDUIT INSTALLATION INSIDE LIGHTING PULL BOX
(SECONDARY STREET LIGHT PULL BOX NO GROUND ROD UNDERGROUND)
(NTS)

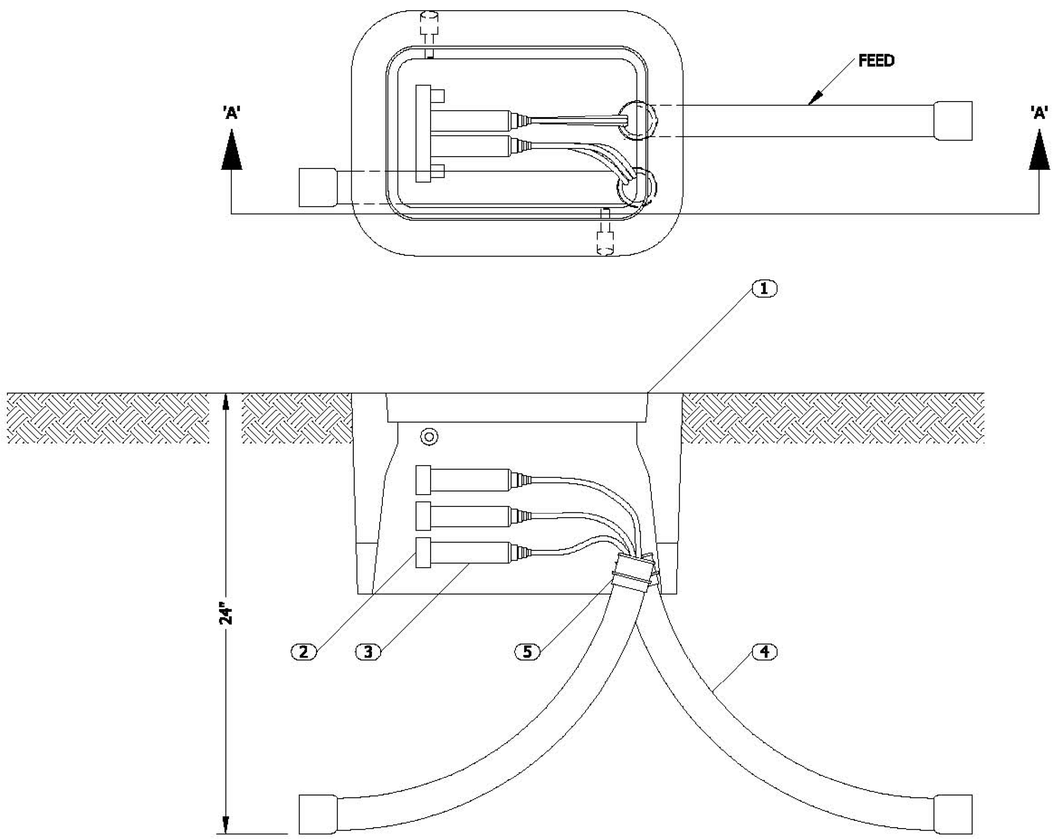

SECTION A - A

1. HANDHOLE W/COVER SMALL STREET LIGHT
   MLGW ITEM NO: 41-0250, HANDHOLE W/COVER ELECTRIC STREET LIGHT CONCRETE

2. MOLE 4 WAY STREET LIGHT
   MLGW ITEM NO: 38-0980, MOLE URD 4 OUTLETS 350KCM-#12 350A 600V

3. TAP KIT W/SLV #6 STRD AL - #4 SOL CU SL
   MLGW ITEM NO: 38-1400, TAP KIT #4 SOL CU-#6 STRD AL W/SLV FOR URD MOLE

4. BEND 1-1/2" 90 DEG 18" RAD PVC SL
   MLGW ITEM NO: 38-2457, BEND PVC 1-1/2" 90DEG 18"RAD TC2 EPC40-PE X BE

5. END BELL 1-1/2 PVC SL
   MLGW ITEM NO: 38-3467, END BELL PVC 1-1/2" TC3 EPC40-SLIP
   MLGW ITEM NO: 55-4205, CEMENT W/APPLICATOR PVC SOLVENT 1QT CAN
   MLGW ITEM NO: 55-4520, CLEANER PVC CONDUIT AND FITTINGS

GENERAL NOTES

(A) THE INFORMATION PROVIDED IN THIS STANDARD DRAWING IS EQUIVALENT TO MLGW STANDARD DRAWING 770.30. BASED ON MLGW ITEM NUMBERS 41-0250, 38-0980, 38-1400, 38-2457, 38-3467, 55-4205, AND 55-4520.

DETAIL 'B'
GROUNDING INSTALLATION DETAILS
(NTS)

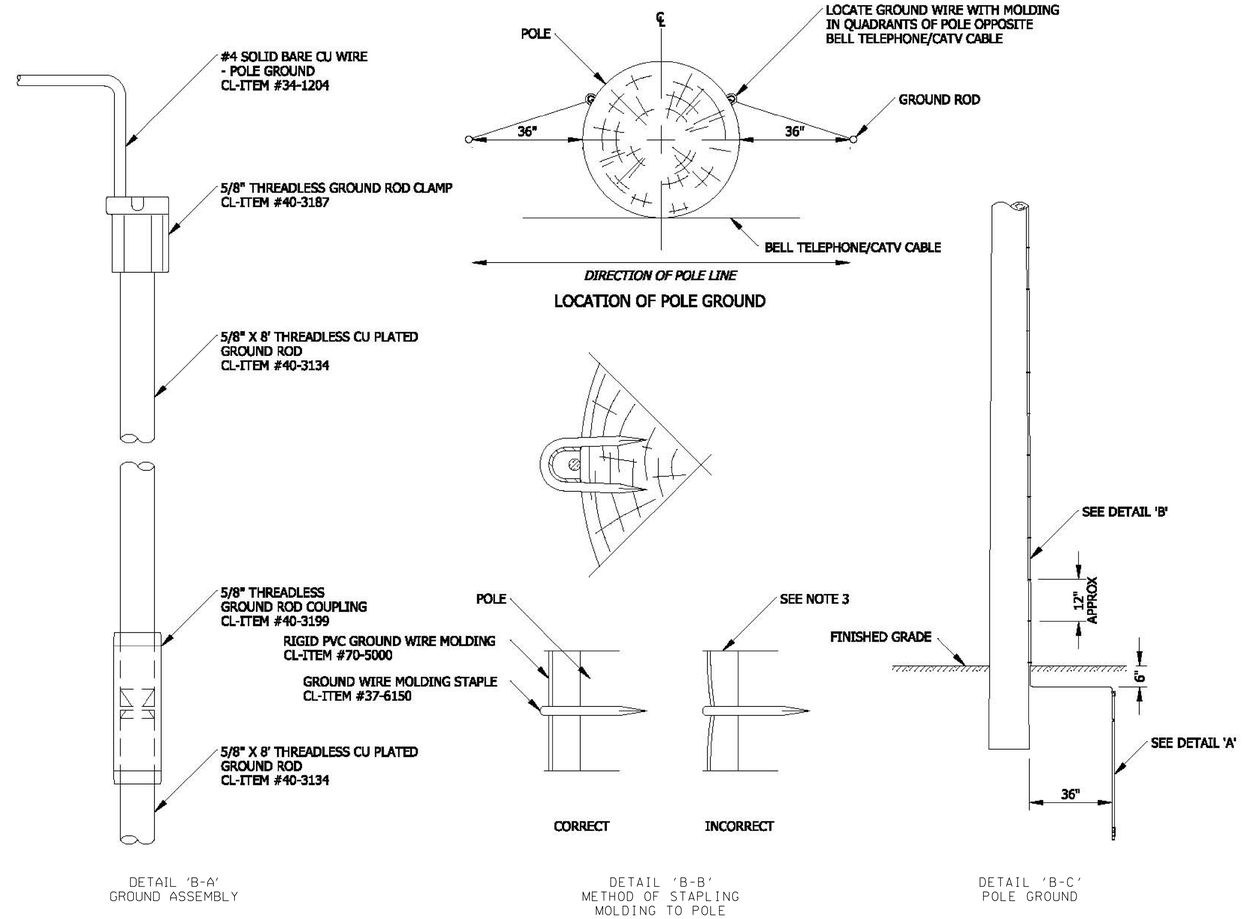

DETAIL 'B-A'
GROUND ASSEMBLY

DETAIL 'B-B'
METHOD OF STAPLING
MOLDING TO POLE

DETAIL 'B-C'
POLE GROUND

(1) GROUND WIRE MOLDING STAPLES SHALL BE SPACED APPROXIMATELY 12" APART AND DRIVEN UNTIL IT TOUCHES THE RIGID PVC OR RE GROUND WIRE MOLDING; DRIVING STAPLE TOO FAR WILL DEFORM THE MOLDING, SEE DETAIL 'B'.

(2) GROUND ROD AND WIRE SHALL BE PLACED ON THE PROPERTY SIDE OF THE POLE, WHEN POSSIBLE.

(3) IT IS VERY IMPORTANT TO NOTE THAT TO PREVENT RADIO INTERFERENCE, STAPLES SHALL BE DRIVEN OVER THE MOLDING EXCEPT WHERE THE TOP AND BOTTOM STAPLES ARE USED TO STRAIGHTEN AND POSITION THE FULL LENGTH OF THE GROUND WIRE PRIOR TO ATTACHING THE MOLDING; THE TOP STAPLE SHALL BE AT LEAST SIX INCHES FROM ANY POLE LINE HARDWARE.

(4) MLGW ITEM NO: 34-1204, #4 SOLID BARE COPPER WIRE - POLE GROUND
MLGW ITEM NO: 40-3187, 5/8" THREADLESS GROUND ROD CLAMP
MLGW ITEM NO: 40-3134, 5/8" X 8' THREADLESS COPPER PLATED GROUND ROD
MLGW ITEM NO: 40-3199, 5/8" THREADLESS GROUND ROD COUPLING
MLGW ITEM NO: 70-5000, RIGID PVC GROUND WIRE MOLDING
MLGW ITEM NO: 37-6150, GROUND WIRE MOLDING STAPLE

GENERAL NOTES

(A) THE INFORMATION PROVIDED IN THIS STANDARD DRAWING IS EQUIVALENT TO MLGW STANDARD DRAWING 103.01. BASED ON MLGW ITEM NUMBERS 34-1204, 40-3187, 40-3134, 40-3199, 70-5000, AND 37-6150.

SEALED BY

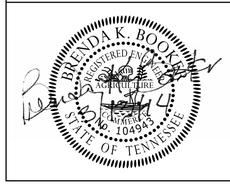

STATE OF TENNESSEE
DEPARTMENT OF TRANSPORTATION

LIGHTING DETAILS

(MLGW STANDARDS)

3/13/2014 2:47:44 PM
C:\Users\BE-Beo\Desktop\Booker\01_ACTIVE\TDOT\E166\SHELBY\04_I-40 AT CANADA RD LIGHTING\05_FINAL CONST DGN FILES\057V.SHT