TYPE	YEAR	PROJECT NO.	SHEET NO.
CONST.	2014	HSIP-I-65-2(97)	2E

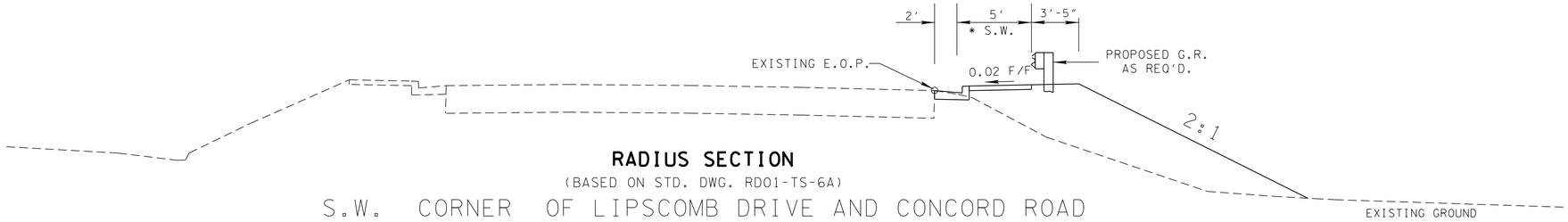

RADIUS SECTION

(BASED ON STD. DWG. RD01-TS-6A)

S.W. CORNER OF LIPSCOMB DRIVE AND CONCORD ROAD

* STA. 35+70.00 TO STA. 36+35.00

STA. 36+35.00 TO STA. 36+45.00 (NO S.W. ONLY C&G)

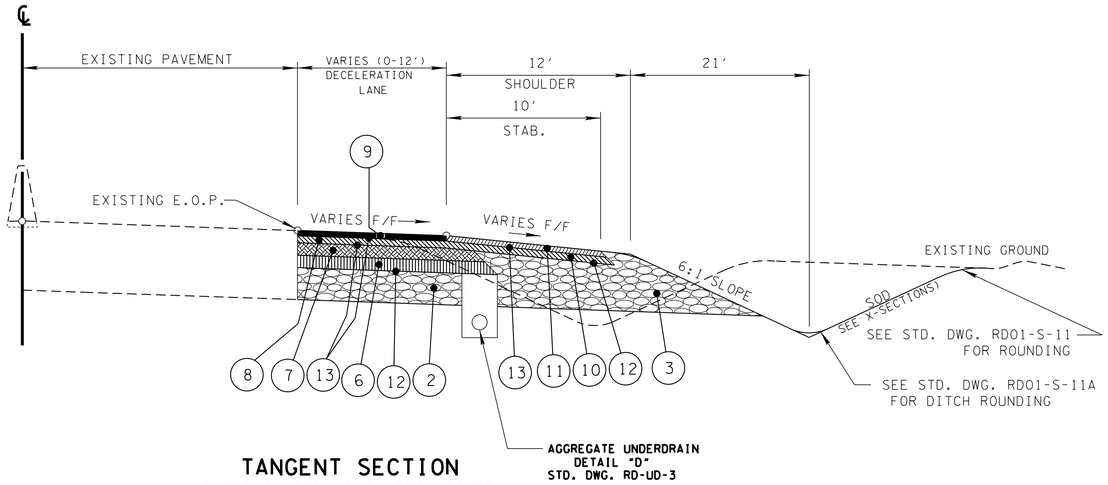

TANGENT SECTION

(BASED ON STD. DWG. RD01-TS-5B)

I-65 N.B. OFF-RAMP DECELERATION LANE

STA. 502+50.00 TO STA. 504+50.00 (0' TO 12')

STA. 504+50.00 TO STA. 506+50.00 (12')

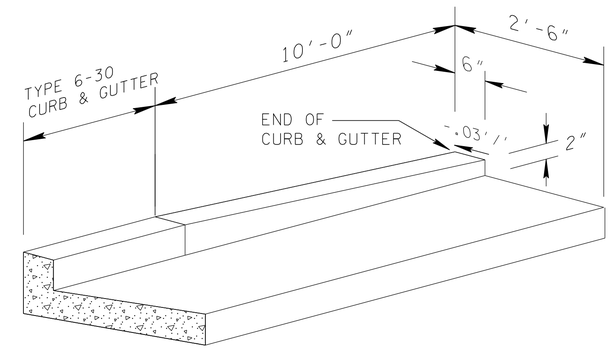

TYPE 6-30 CURB & GUTTER TRANSITION DETAIL

THIS DETAIL SHALL APPLY TO ALL ENDING SECTIONS OF TYPE 6-30 CURB & GUTTER

PROPOSED PAVEMENT SCHEDULE

(1) MINERAL AGGREGATE @ 4 in. THICK
303-01 MINERAL AGGREGATE, TYPE A BASE, GRADING "D"
(I-65: S.B. OFF-RAMP & NB OFF-RAMP MAINLINE AND SHOULDERS)

(2) MINERAL AGGREGATE @ 8 in. THICK
303-01 MINERAL AGGREGATE, TYPE A BASE, GRADING "D"
(I-65 N.B. OFF-RAMP DECELERATION LANE)

(3) MINERAL AGGREGATE @ 16 in. THICK
303-01 MINERAL AGGREGATE, TYPE A BASE, GRADING "D"
(I-65 N.B. OFF-RAMP DECELERATION LANE)

(4) TREATED PERMEABLE BASE @ 4 in. THICK
(313-03 TREATED PERMEABLE BASE S.Y.)
(I-65: S.B. OFF-RAMP AND & NB OFF-RAMP MAINLINE AND SHOULDERS)

(5) PORTLAND CEMENT CONC. PAVEMENT(PLAIN)10" THICK
501-01.03 PORTLAND CEMENT CONCRETE PAVEMENT (PLAIN) 10" S.Y.
(I-65: S.B. OFF-RAMP & NB OFF-RAMP MAINLINE AND SHOULDERS)

(16) BITUMINOUS PLANT MIX BASE @ 3 in. THICK
307-01.01 ASPHALT CONCRETE MIX (PG64-22) (BPMB-HM) GRADING A
(I-65: N.B. OFF-RAMP DETOUR PHASE 1 TRAFFIC CONTROL)

(6) BITUMINOUS PLANT MIX BASE @ 4 in. THICK
(APROX. 360 LBS./S.Y.) (I-65 NB OFF-RAMP DECE. LANE)
307-02.02 ASPHALT CEMENT (PG70-22) (BPMB-HM) GRADING "A-S"
307-02.03 AGGREGATE (BPMB-HM) GRADING "A-S"

(7) BITUMINOUS PLANT MIX BASE @ 4 in. THICK
(APPROX. 460 LBS./SQ.YD.) (I-65 NB OFF-RAMP DECE. LANE & NB OFF-RAMP
307-02.01 ASHPHALT CONCRETE MIX (PG70-22)(BPMB-HM) GRADING "A"

(8) BITUMINOUS PLANT MIX BINDER @ 2.00 in. THICK
(APPROX. 226 LBS./SQ.YD.), I-65 NB OFF-RAMP DECE. LANE & NB OFF-RAMP
307-02.08 ASPHALT CONCRETE MIX (PG70-22)(BPMB-HM) GRADING "B-M2"

(9) ASPHALTIC CONCRETE SURFACE @ 1.25 in. THICK
(APPROX. 132.5 LBS./SQ.YD.) I-65 NB OFF-RAMP DECE. LANE & NB OFF-RAMP
411-02.10 ACS MIX (PG70-22) GRADING "D"

(10) BITUMINOUS PLANT MIX BINDER @ 2.00 in. THICK
(APPROX. 226 LBS./SQ.YD.), I-65 NB OFF-RAMP DECE. LANE & NB OFF-RAMP
307-01.08 ASPHALT CONCRETE MIX (PG64-22)(BPMB-HM) GRADING "B-M2"

(17) ASPHALTIC CONCRETE SURFACE @ 1.25 in. THICK
((APPROX.132.5 LBS./SQ.YD.)(I-65: N.B. OFF-RAMP DETOUR
411-01.10 ASPHALTIC CONCRETE SURFACE(PG64-22) GRADING D

(11) ASPHALTIC CONCRETE SURFACE @ 1.25 in. THICK
(APPROX. 128.8 LBS./SQ.YD.)I-65 NB OFF-RAMP DECE. LANE & NB OFF-RAMP
411-01.07 ACS MIX (PG64-22) GRADING "E" SHOULDER

(12) PRIME COAT
402-01 BITUMINOUS MATERIAL FOR PRIME COAT (PC) (0.30-0.35 GAL/SY)
402-02 AGGREGATE FOR COVER MATERIAL (PC) (8-12 LB/SY)

(13) TACK COAT
403-01 BITUMINOUS MATERIAL FOR TACK COAT (TC) (0.07 GAL/SY)

(14) MINERAL AGGREGATE @ 6.75 in. THICK
303-01 MINERAL AGGREGATE, TYPE A BASE, GRADING "D"
(I-65: N.B. OFF-RAMP LEFT SIDE SHOULDER)

(15) MINERAL AGGREGATE @ 18 in. THICK
303-01 MINERAL AGGREGATE, TYPE A BASE, GRADING "D"
(I-65: N.B. OFF-RAMP R.T. SIDE SHOULDER)

(18) MINERAL AGGREGATE @ 11.75 in. THICK
303-01 MINERAL AGGREGATE, TYPE A BASE, GRADING "D"
(I-65: NB OFF-RAMP LT. SIDE SHOULDER FOR DETOUR)

SEALED BY

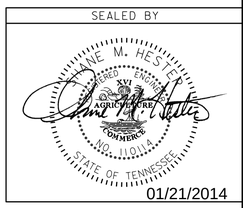

01/21/2014

STATE OF TENNESSEE
DEPARTMENT OF TRANSPORTATION

TYPICAL SECTIONS AND PAVEMENT SCHEDULE

6-JAN-2014 11:28
c:\Projects\Williamson\I65NBandSBOffRamps@SR253\I65NBandSBOffRamps\WMI65_0002E.sht