TYPE	YEAR	PROJECT NO.	SHEET NO.
CONST.	2014	HSIP-I-65-2(97)	9B

STATION	SHOULDER BUILDUP WIDTH FOR TEMP. LANE (FT.)
106+00.00	5.73
106+50.00	7.57
107+00.00	19.79
107+50.00	22.36
108+00.00	16.53
108+50.00	7.13
109+00.00	8.00
111+50.00	8.00

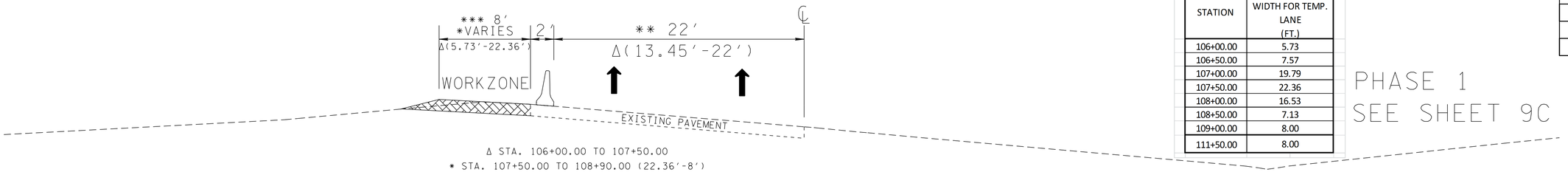

Δ STA. 106+00.00 TO 107+50.00
* STA. 107+50.00 TO 108+90.00 (22.36'-8')
** STA. 107+50.00 TO END OF PROJ.
*** STA. 108+90.00 TO 111+50.00
* STA. 111+50.00 TO END OF PROJ.(MATCH EXIST. SHOULDER)

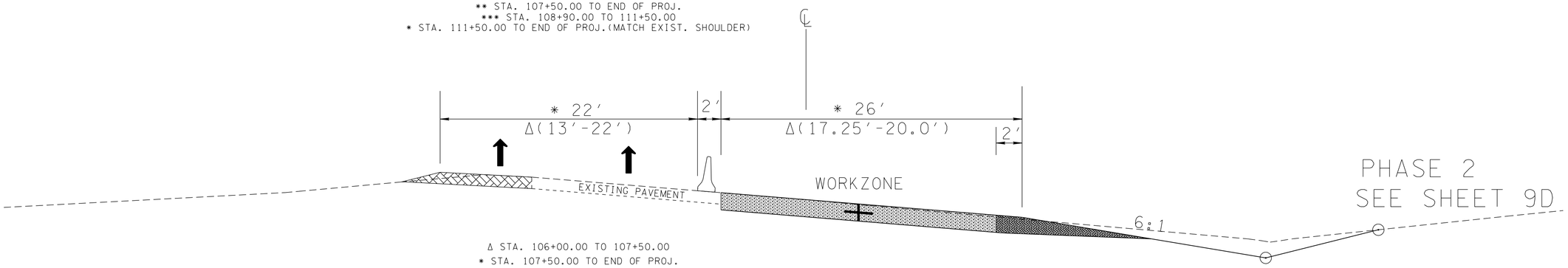

Δ STA. 106+00.00 TO 107+50.00
* STA. 107+50.00 TO END OF PROJ.

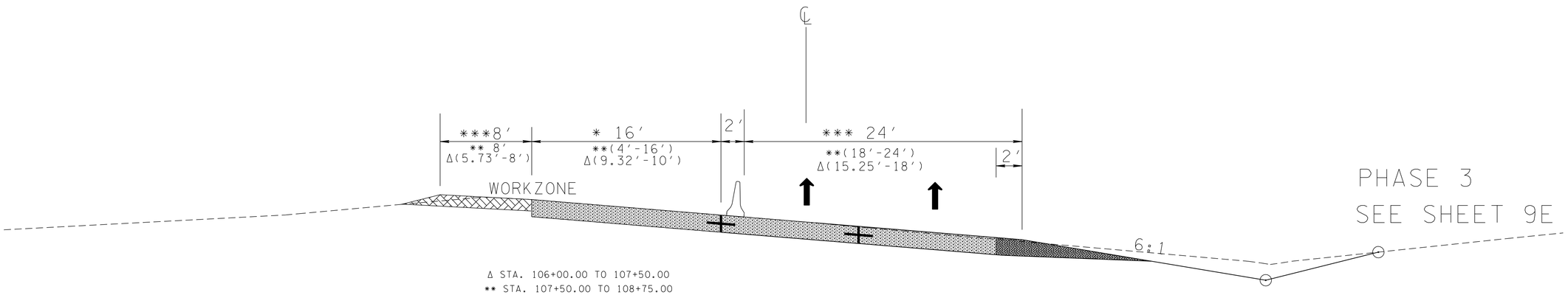

Δ STA. 106+00.00 TO 107+50.00
** STA. 107+50.00 TO 108+75.00
*** STA. 107+50.00 TO END OF PROJ.

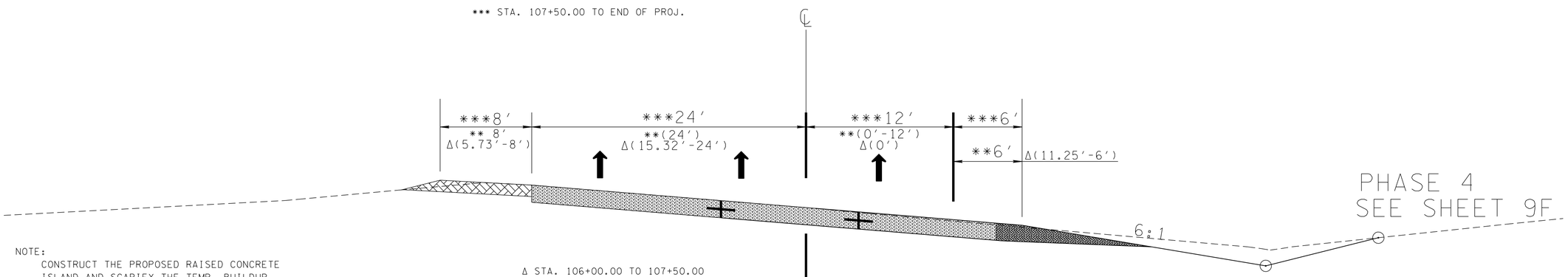

NOTE:
CONSTRUCT THE PROPOSED RAISED CONCRETE ISLAND AND SCARIFY THE TEMP. BUILDUP LANE FROM STA.106+00 TO STA. 108+90.00 SEE SHEET 9F FOR DETAIL.

Δ STA. 106+00.00 TO 107+50.00
** STA. 107+50.00 TO 108+75.00
*** STA. 107+50.00 TO END OF PROJ.

SEALED BY

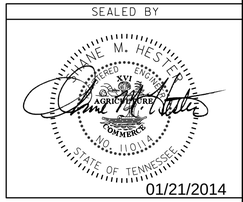

STATE OF TENNESSEE
DEPARTMENT OF TRANSPORTATION

TRAFFIC CONTROL DETAIL I-65: N.B. OFF-RAMP

6-JAN-2014 14:37
C:\Projects\Williamson\165NBandSBOffRamps@SR253\165NBandSBOffRamps\WM65_0009B.sht