TYPE	YEAR	PROJECT NO.	SHEET NO.
CONST.	2014	HSIP-I-65-2(97)	11

RAMP C STA. 300+00.00 =
S.R.253 W STA. 24+03.64
N 606898.1075
E 1732310.4679

U.P.S. TRAFFIC SIGNAL CABINET FOUNDATION
(NOT TO SCALE)

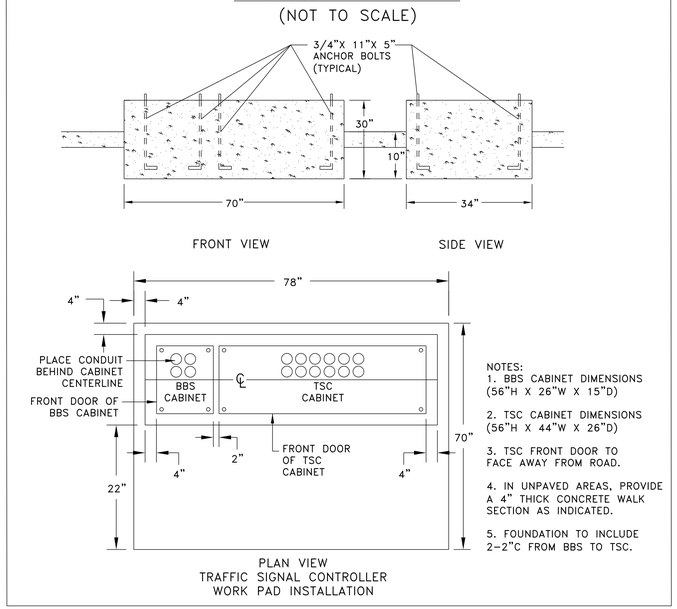

NOTES:
1. BBS CABINET DIMENSIONS (56"H X 26"W X 15"D)
2. TSC CABINET DIMENSIONS (56"H X 44"W X 26"D)
3. TSC FRONT DOOR TO FACE AWAY FROM ROAD.
4. IN UNPAVED AREAS, PROVIDE A 4" THICK CONCRETE WALK SECTION AS INDICATED.
5. FOUNDATION TO INCLUDE 2-2"C FROM BBS TO TSC.

CONDUIT TO CONTINUE APPROX. 156 +/- FT. FROM STA. 22+50 AND TERMINATE IN EXISTING PULL BOX AT BASE OF EXISTING STEEL POLE JUST EAST OF THE END OF THE BRIDGE. ALSO UNCLUDES 1 TYPE B PULL BOX AND SHIELDED DETECTOR CABLE FROM THE EXISTING SYSTEM LOOPS.

SIGNAL SUPPORT POLE DATA				
POLE NO.	NORTHING	EASTING	GRND ELEV	ARM LENGTH
1	606967.47	1732401.96	711.12'	66.0'
2	606835.45	1732358.18	712.66'	60.0' EB 66.0' SB
3	606971.76	1732277.25	712.38'	68.0'

NOTE:
1. INCLUDES 5 SHIELDED DETECTOR CABLES FOR EXISTING SYSTEM LOOPS
2. INCLUDES 6-FIBER CABLE FOR SIGNAL AND 6-FIBER CABLE FOR CCTV

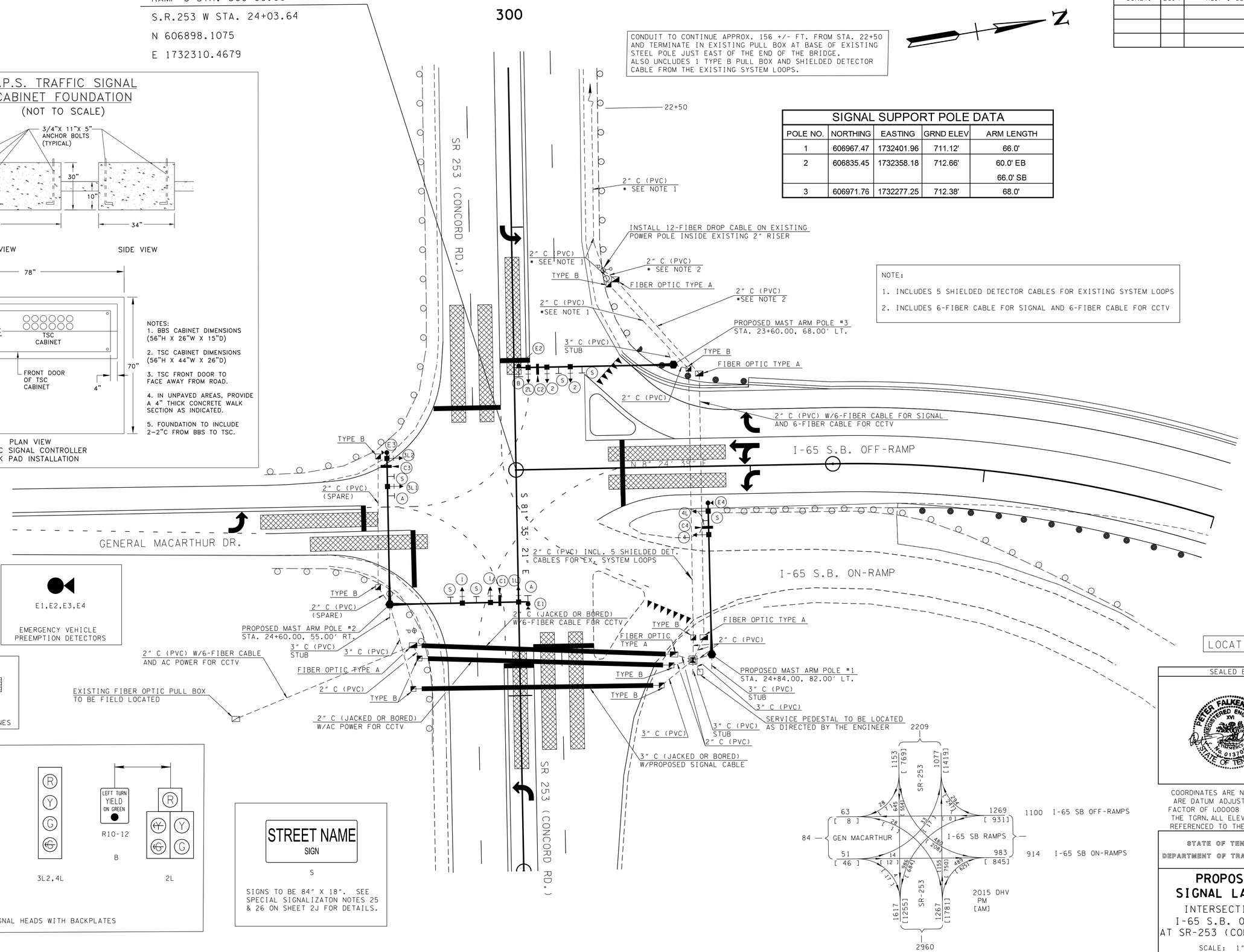

C1,C2,C3,C4
PROPOSED VIDEO DETECTION CAMERAS

E1,E2,E3,E4
EMERGENCY VEHICLE PREEMPTION DETECTORS

PROPOSED VIDEO DETECTION ZONES

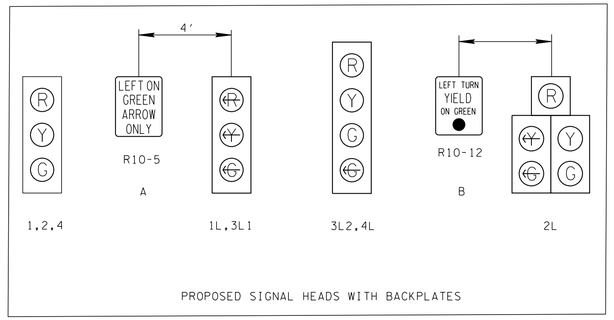

STREET NAME SIGN
S
SIGNS TO BE 84" X 18". SEE SPECIAL SIGNALIZATON NOTES 25 & 26 ON SHEET 2J FOR DETAILS.

SEALED BY

01/22/2014

COORDINATES ARE NAD/83(1995), ARE DATUM ADJUSTED BY THE FACTOR OF 1.00008 AND TIED TO THE TGRN. ALL ELEVATIONS ARE REFERENCED TO THE NAVD 1988.

STATE OF TENNESSEE
DEPARTMENT OF TRANSPORTATION

PROPOSED SIGNAL LAYOUT
INTERSECTION OF I-65 S.B. OFF RAMP AT SR-253 (CONCORD RD)

SCALE: 1"=20 '

01/22/2014 3:24:48 PM
C:\Melissa\PROJECTS\SIGNALS\Williamson\I65_Concord\Signal_SBramp_Macarthur.dgn