TYPE	YEAR	PROJECT NO.	SHEET NO.
R.O.W.	2013	HSIP-I-65-2(97)	2A
CONST.	2014	HSIP-I-65-2(97)	2C

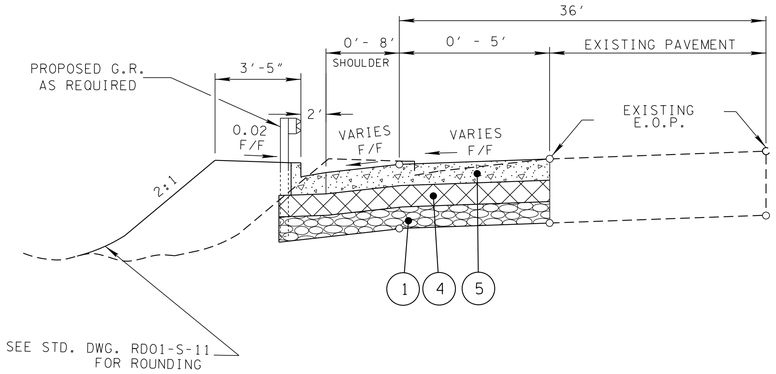

TANGENT SECTION

(BASED ON STD. DWG. RD01-TS-4 & RD01-TS-6)

I-65 SOUTH BOUND OFF-RAMP (LEFT SIDE)

STA. 300+46.61 TO STA. 301+00.00

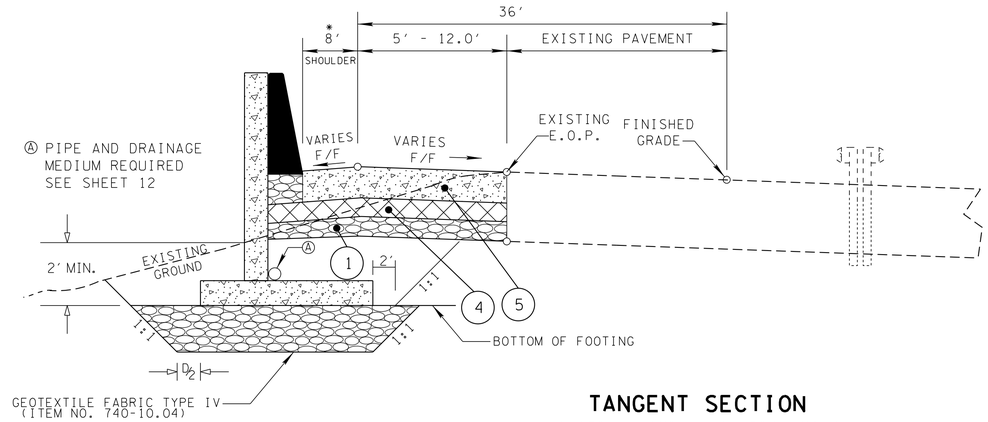

TANGENT SECTION

(BASED ON STD. DWG. RD01-TS-4)

I-65 SOUTH BOUND OFF-RAMP (LEFT SIDE)

STA. 301+00.00 TO STA. 301+63.00

*STA. 301+00.00 TO STA. 301+35.00 (10.5' TO 8')

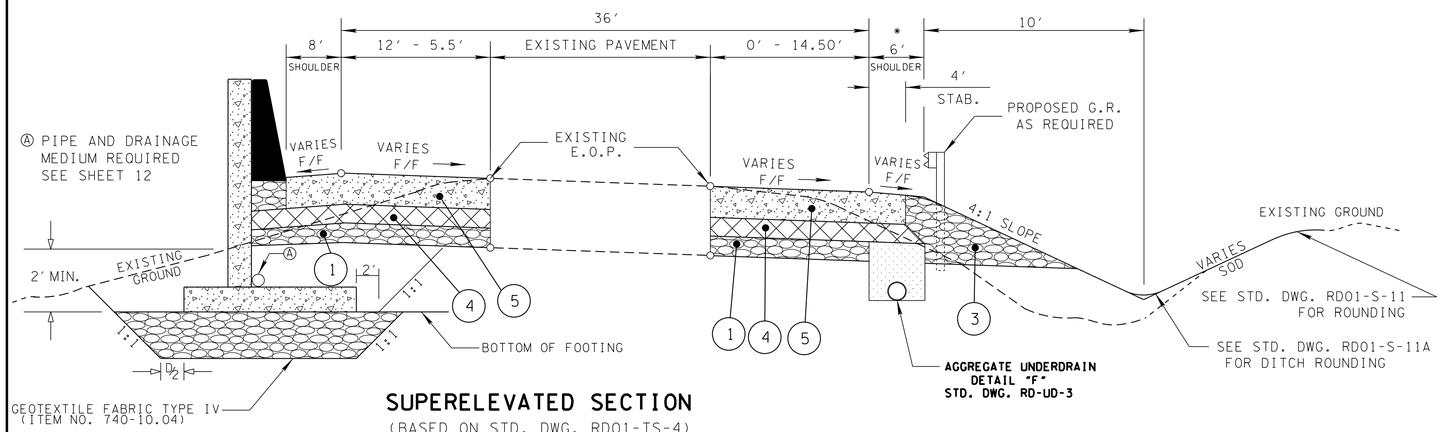

SUPERELEVATED SECTION

(BASED ON STD. DWG. RD01-TS-4)

I-65 SOUTH BOUND OFF-RAMP (RT. & LT. SIDE)

STA. 301+63.00.00 TO STA. 304+70.00

*STA. 301+63.00 TO STA. 302+ 60.00 (4.38' TO 6')

NOTE: SEE SHEET 2E FOR PAVEMENT SCHEDULE

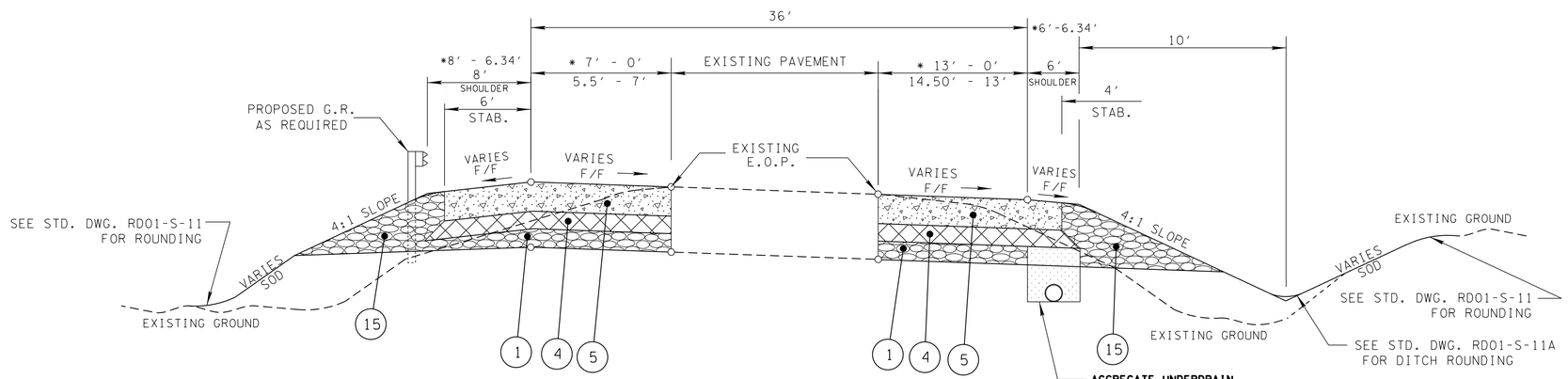

SUPERELEVATED SECTION

(BASED ON STD. DWG. RD01-TS-4)

I-65 SOUTH BOUND OFF-RAMP (RT. & LT. SIDE)

STA. 304+70.00.00 TO STA. 308+50.00

* STA. 308+50.00 TO STA. 311+60.00

SEALED BY

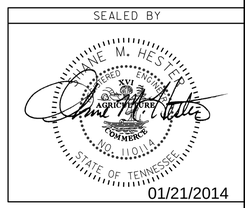

STATE OF TENNESSEE
DEPARTMENT OF TRANSPORTATION

TYPICAL SECTIONS

6-JAN-2014 11:28
C:\Projects\Williamson\I65NBandSBOffRamps@SR253\I65NBandSBOffRamps\WMI65_0002C.sht