TYPE	YEAR	PROJECT NO.	SHEET NO.
R.O.W.	2013	HSIP-I-65-2(97)	2
CONST.	2014	HSIP-I-65-2(97)	2D

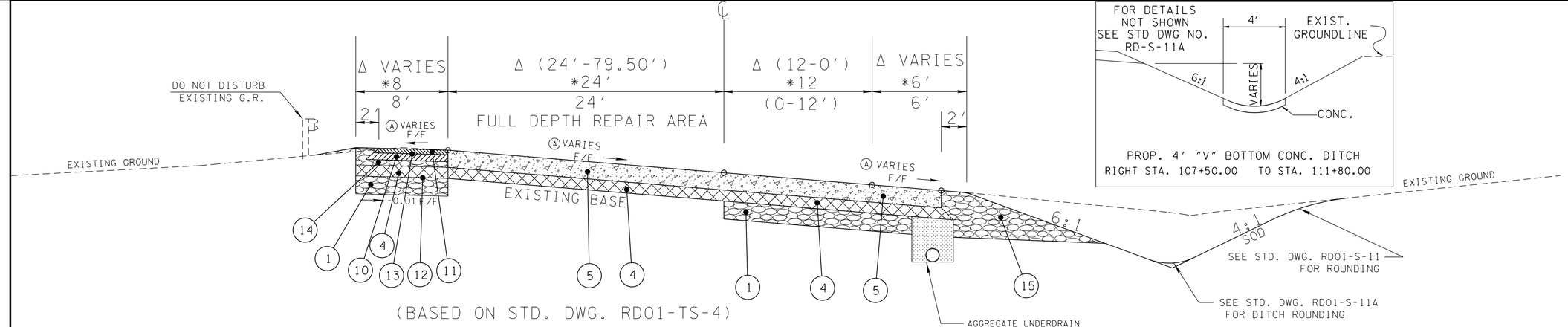

(BASED ON STD. DWG. RD01-TS-4)

I-65 NORTH BOUND OFF-RAMP

STA. 107+50.00 TO 108+75.00

* STA. 108+75.00 TO 111+50.00

Δ STA. 111+50.00 TO END OF PROJ.

Δ R.T. SIDE SHOULDER (6'- TIE TO EXISTING SHOULDER)

Δ L.T. SIDE SHOULDER (8'- TIE TO EXISTING SHOULDER)

Ⓐ SEE CROSS SECTIONS FOR CROSS SLOPE

STATION	SHOULDER BUILDUP WIDTH FOR TEMP. LANE (FT.)
106+00.00	5.73
106+50.00	7.57
107+00.00	19.79
107+50.00	22.36
108+00.00	16.53
108+50.00	7.13
109+00.00	8.00
111+50.00	8.00

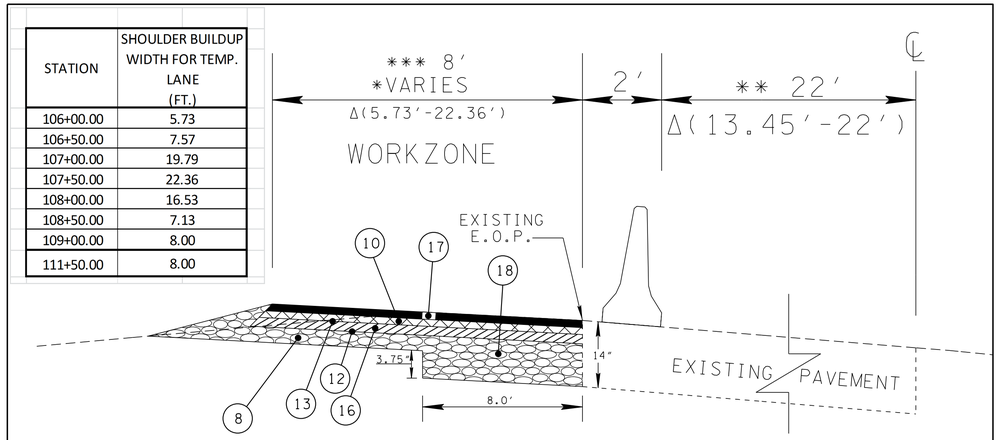

PAVING SECTION FOR TEMP. DETOUR PHASE 1 TRAFFIC COTROL

Δ STA. 106+00.00 TO 107+50.00

* STA. 107+50.00 TO 108+90.00 (22.36'-8')

** STA. 107+50.00 TO END OF PROJ.

*** STA. 108+90.00 TO 111+50.00

* STA. 111+50.00 TO END OF PROJ.(MATCH EXIST. SHOULDER)

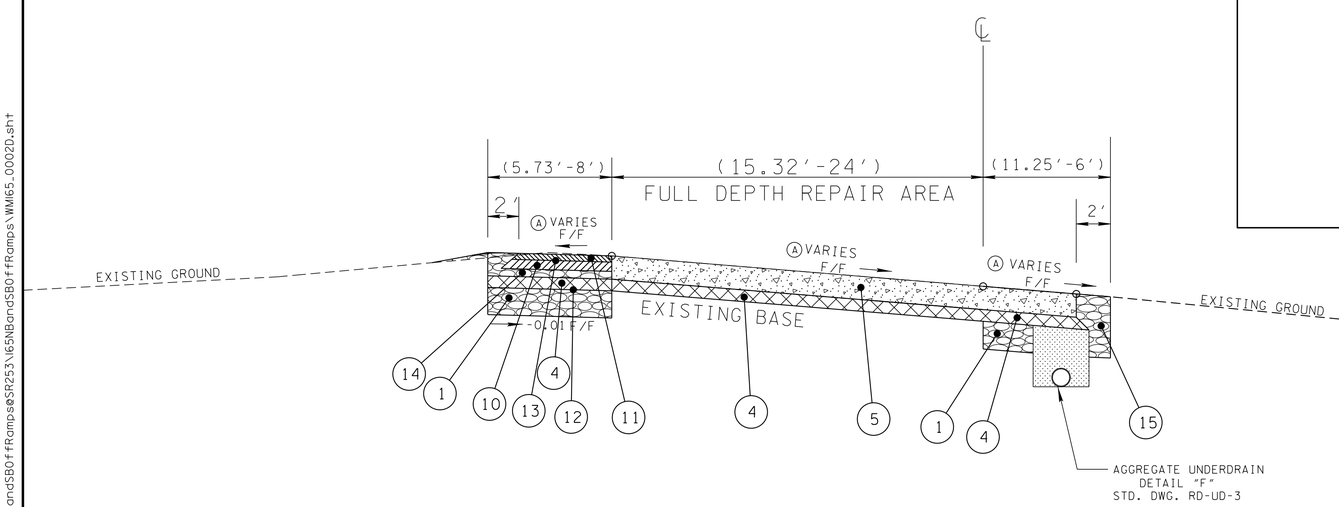

(BASED ON STD. DWG. RD01-TS-4)

I-65 NORTH BOUND OFF-RAMP

STA. 106+00.00 TO 107+50.00

Ⓐ SEE CROSS SECTIONS FOR CROSS SLOPE DETAIL

NOTE: SEE SHEET 2E FOR PAVEMENT SCHEDULE

SEALED BY

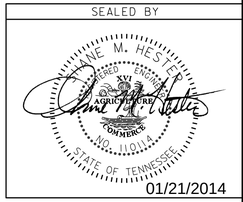

01/21/2014

STATE OF TENNESSEE
DEPARTMENT OF TRANSPORTATION

TYPICAL SECTIONS

6-JAN-2014 11:28
C:\Projects\Williamson\I65NBandSBOffRampsesSR253\I65NBandSBOffRamps\WMI65_0002D.sht