TYPE	YEAR	PROJECT NO.	SHEET NO.
CONST.	2014	HISP-I-65-2(97)	12

CIP CANTILEVER WALL, CIP GRAVITY WALL

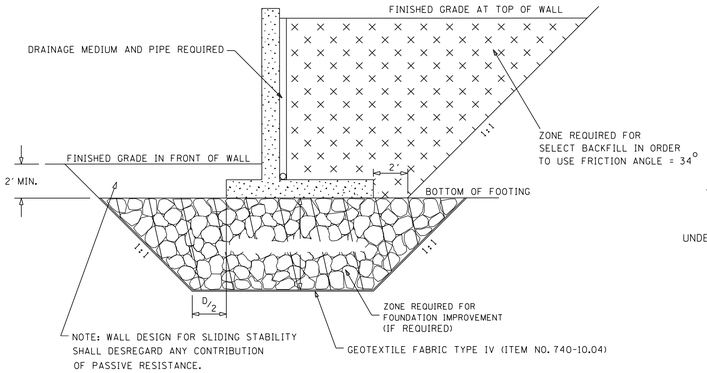

STATION 301+00 TO STATION 304+70

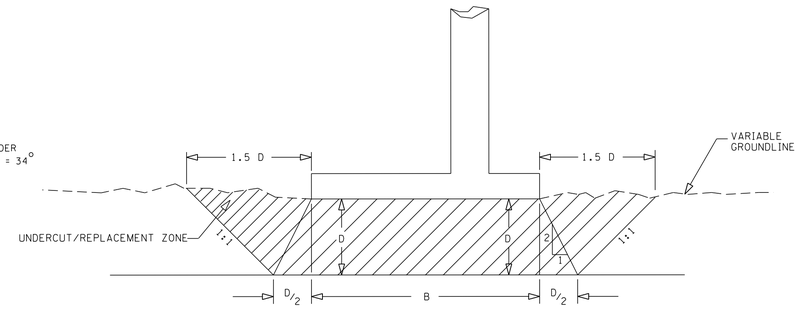

SCHEMATIC FOR UNDERCUT/REPLACEMENT - WHERE REQUIRED

ESTIMATED RETAINING WALL QUANTITIES

ITEM NO.	DESCRIPTION	UNIT	QUANTITY
604-07.01	RETAINING WALL (I-65: S.B. OFF-RAMP, LT. SIDE FROM STA. 301+00 TO STA. 304+70 AND LENGTH = 392')	S.F.	3368
711-05.72	SINGLE SLOPE HALF CONCRETE BARRIER WALL	L.F.	392

NOTE:

1. THE RETAINING WALL PAY QUANTITY IS BASED ON THE SURFACE AREA BETWEEN THE TOP OF THE RETAINING WALL AND 2'-0" BELOW THE GROUND LINE.
2. FOR GENERAL NOTES FOR RETAINING WALL SEE SHEET 12A.

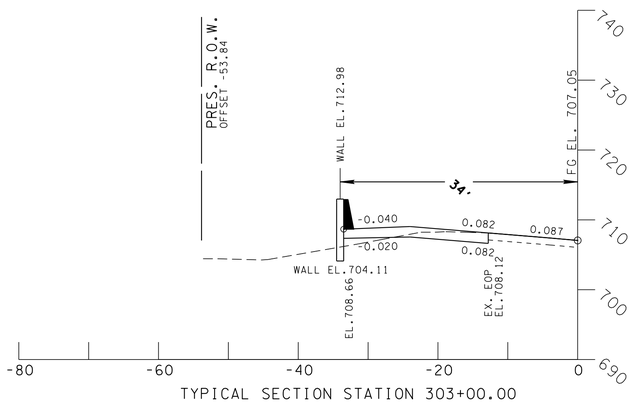

TYPICAL SECTION STATION 303+00.00

BORING NO.	STATION	CENTERLINE REFERENCE	TOTAL DEPTH	GROUND ELEVATION	ROCK ELEVATION
1	301+33	45.00' LT	13.0'	706.9	693.9
2	301+83	30.00' LT	12.1'	709.5	697.4
3A	302+28	40.00' LT	22.9'	707.1	694.2
3B	302+33	40.00' LT	12.9'	707.1	694.2
4	302+83	36.00' LT	10.5'	706.3	695.8
5	303+28	35.00' LT	13.5'	705.3	691.8
6	303+33	35.00' LT	2.5'	705.1	Early Refusal
7	303+83	36.00' LT	10.0'	703.1	693.1
8	304+33	37.00' LT	20.1'	702.0	691.9
9	304+70	36.00' LT	10.8'	701.0	690.3

BORING LOCATIONS

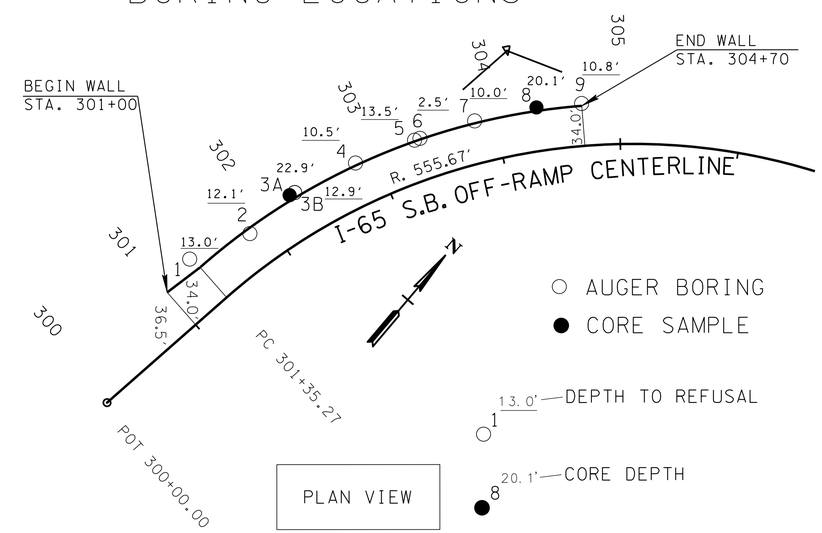

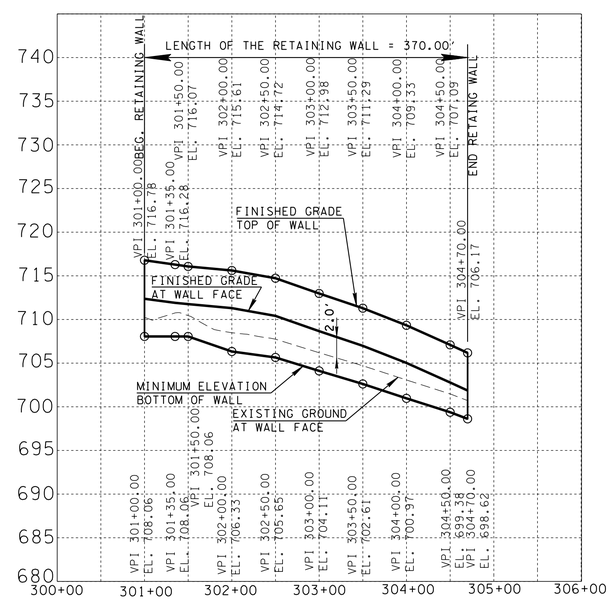

WALL ELEVATION VIEW

WALL FACE AREA= 3368.0 SF

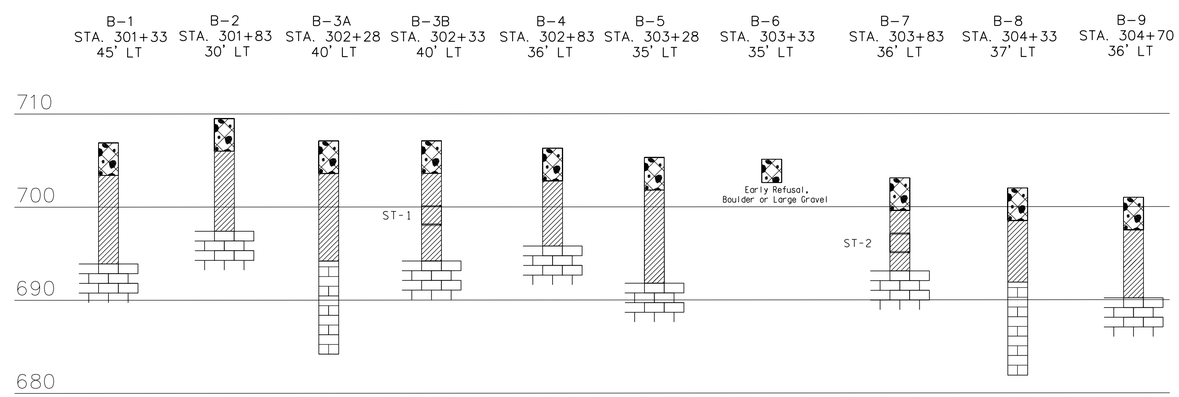

NOTE:
BORING DEPICTIONS SHOWN INDICATE GENERAL SOIL AND ROCK TYPES AT THE SPECIFIC BORING LOCATIONS.

TO ASSIST IN BID PREPARATION FOR FOUNDATION CONSTRUCTION, DETAIL ROCK AND SOIL DESCRIPTION AND ROCK SAMPLES MAY BE AVAILABLE FOR INSPECTION.

LEGEND

- ROADWAY FILL- CLAY, SOIL, AND GRAVEL
- CLAY- BROWN, WITH SILT AND GRAVEL
- LIMESTONE - SLIGHTLY WEATHERED TO UNWEATHERED
- ST-1 / ST-2 SHELBY TUBE SAMPLES

SEALED BY

STATE OF TENNESSEE
DEPARTMENT OF TRANSPORTATION

GEOTECHNICAL DESIGN NOTES AND REQUIREMENTS
RETAINING WALL
INTERSTATE 65 S.B. OFF-RAMP
STATION 301+00 TO 304+70
WILLIAMSON COUNTY

21-JAN-2014 10:05
C:\Projects\Williamson\I65NBandSBOffRamps@SR253\I65NBandSBOffRamps\WWI65_0012.sht