TYPE	YEAR	PROJECT NO.	SHEET NO.
CONST.	2014	HSIP-I-65-2(97)	11A

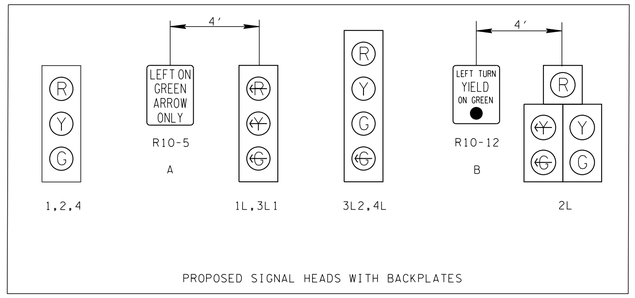

PROPOSED SIGNAL HEADS WITH BACKPLATES

SEE DETAIL ON SHEET 11 FOR TRAFFIC SIGNAL CABINET FOUNDATION DIMENSIONS.

N

SIGNAL SUPPORT POLE DATA				
POLE NO.	NORTHING	EASTING	GRND ELEV	ARM LENGTH
1	606761.85	1733564.54	696.65'	46.0'
2	606662.78	1733544.61	693.96'	52.0'
3	606680.34	1733462.88	697.81'	70.0' WB 40.0' SB

P2

PROPOSED COUNTDOWN PEDESTRIAN SIGNAL HEADS

E1,E2,E3,E4

EMERGENCY VEHICLE PREEMPTOPN DETECTORS

STREET NAME SIGN

S

SIGNS TO BE 84' X 18". SEE SPECIAL SIGNALIZATION NOTES 25 & 26 ON SHEET 2J FOR DETAILS.

C1,C2,C3,C4

PROPOSED VIDEO DETECTION CAMERAS

PROPOSED VIDEO DETECTION ZONES

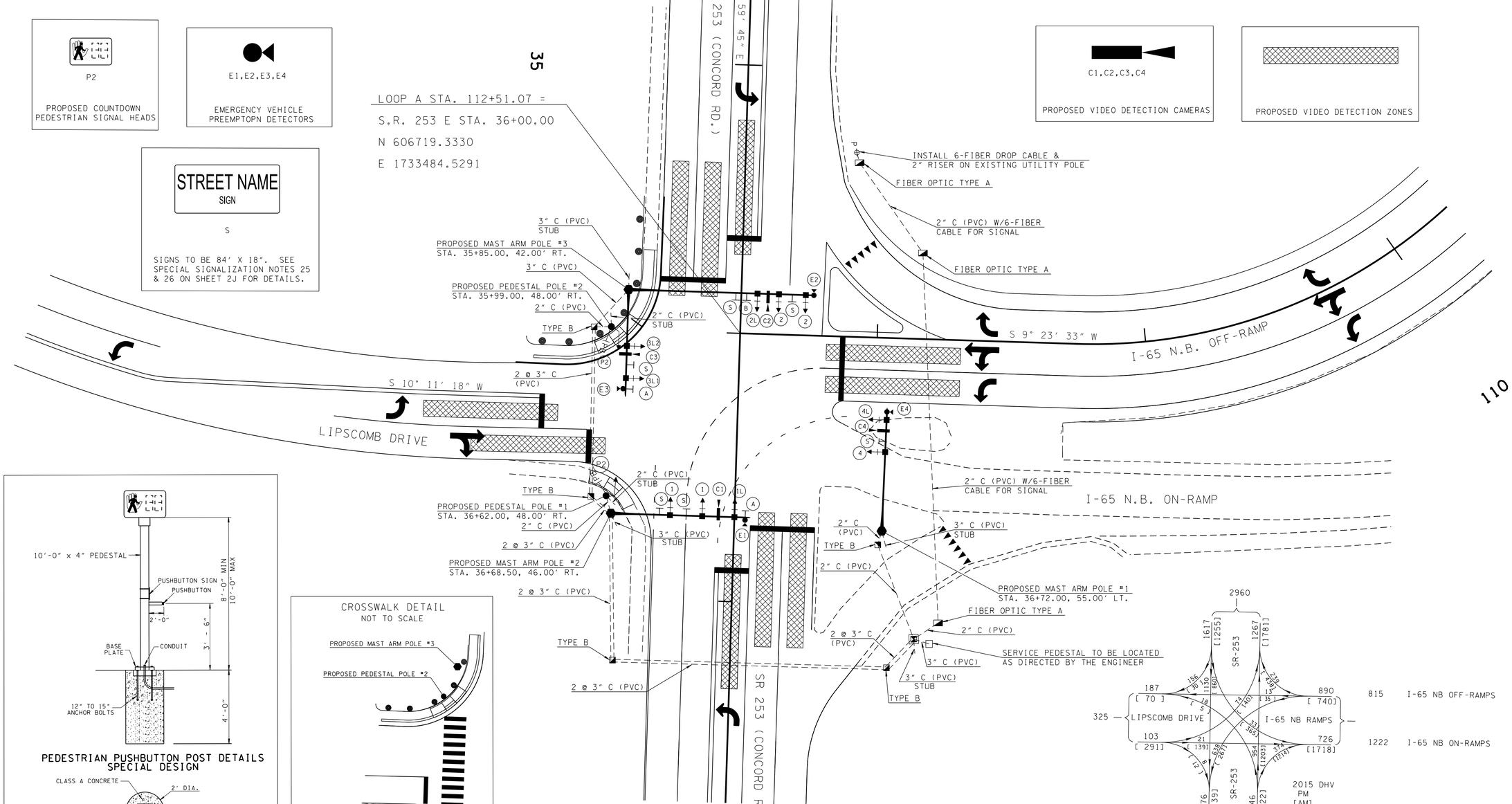

LOCATION #2

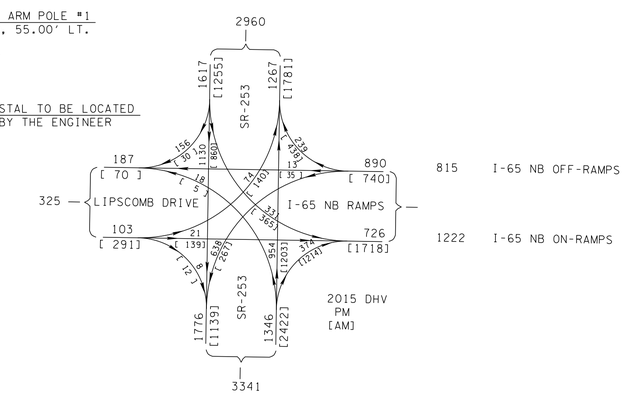

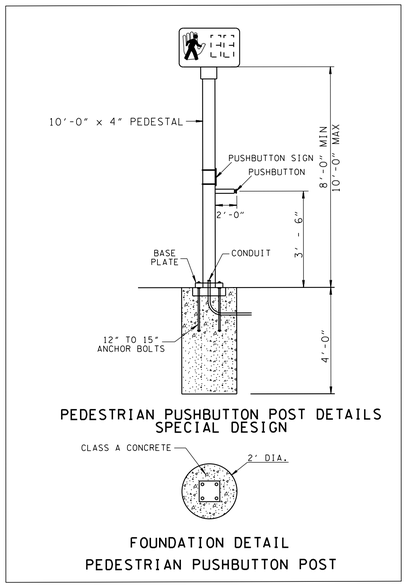

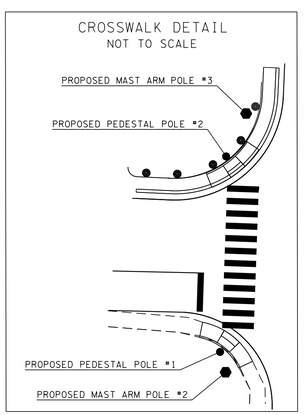

SEALED BY

PETER FALKENBERG REGISTERED ENGINEER XVI No. 013709 STATE OF TENNESSEE

01/22/2014

COORDINATES ARE NAD/83(1995), ARE DATUM ADJUSTED BY THE FACTOR OF 1.00008 AND TIED TO THE TGRN. ALL ELEVATIONS ARE REFERENCED TO THE NAVD 1988.

STATE OF TENNESSEE
DEPARTMENT OF TRANSPORTATION

PROPOSED SIGNAL LAYOUT

INTERSECTION OF
I-65 N.B. OFF RAMP
AT SR-253 (CONCORD RD)

SCALE: 1"=20 '

01/22/2014 3:33:57 PM
C:\Melissa\PROJECTS\SIGNALS\Williamson\I65_Concord\Signal_NBramp_Lipscomb.dgn