FED. ROAD DIST. NO.	STATE	FEDERAL AID PROJECT NO.	FISCAL YEAR	SHEET NO.	TOTAL SHEETS
3	TENN.	EB I-24-3(8) 4-	1972	43	

LIST OF DRAWINGS

	DWG. NO.
Layout	K-99-110
Superstructure	K-99-111
Superstructure	K-99-112
Superstructure	K-99-113
Superstructure	K-99-114
Bent Details	K-99-115
Bent Details	K-99-116
Abutment Details	K-99-117
Abutment Details	K-99-118
Bill of Steel	K-99-119
Bridgerail	K-38-154A
Standard Reinf. Bar Support Details for Concrete Slabs	K-80-14
Reinf. Concrete Pavement @ Bridge Ends	K-86-144
Miscellaneous Abutments & Drainage Details	K-85-150
Pile Splice Detail - Steel Piles	H-5-111
Standard Metal Deep Beam Guardrail	RD-R-7

REVISIONS

NO.	DATE	BY	BRIEF DESCRIPTION
1	11-4-74	M.V.C.	Dry Excavation @ Abuts. Added

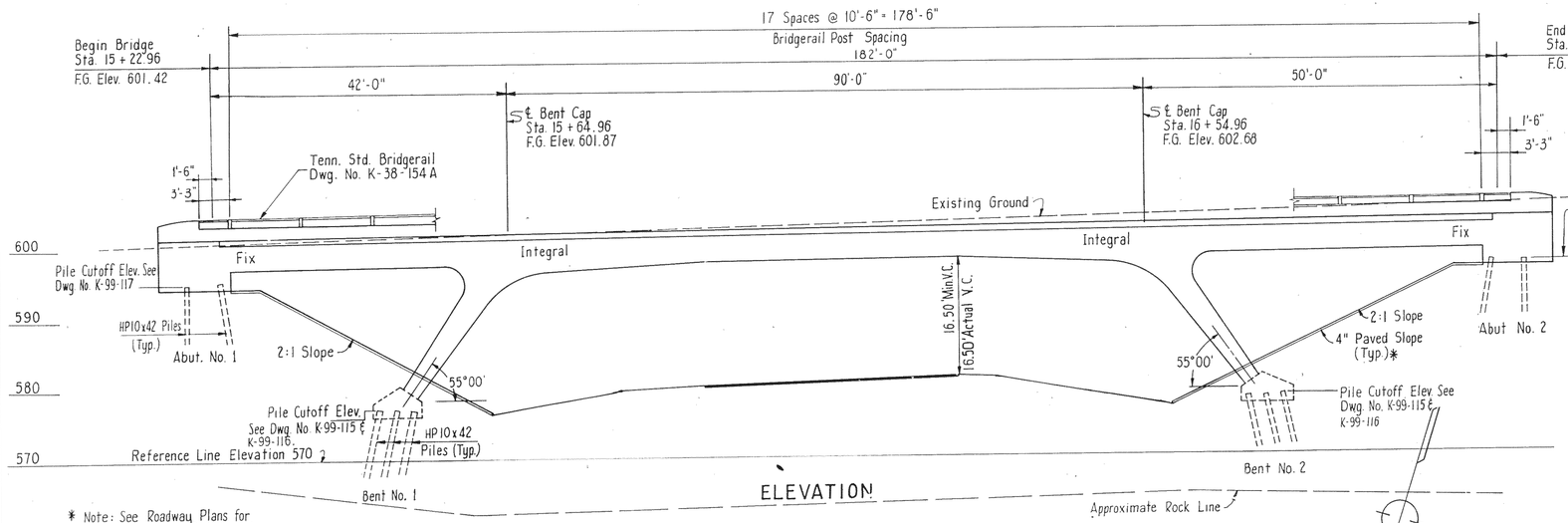

ELEVATION

* Note: See Roadway Plans for Slope Pavement Details and Quantities.

ESTIMATED QUANTITIES

Location	204-02.01 Dry Excavation (Bridges) C.Y. ①	604-03.01 Class "A" Concrete (Bridges) C.Y.	604-03.02 Steel Bar Reinf. (Bridges) Lb.	604-03.03 Linseed Oil Treatment S.Y.		606-02.03 Steel Piles HP 10 x 42 L.F.	616-06 Conc. Parapet w/ Structural Tubing (K-38-154A) L.F.	710-10 6"ϕ Perf. C.M. Pipe (18 GA) w/ Granular Backfill ② ④ L.F.	710-11 6"ϕ C.M. Pipe (18 Ga.) L.F.	
Superstr.		633.5	190,475	1203		120	370			
Abut. No. 1	47	14.5	2,465			249		54	13	
Bent. No. 1	153	18.7	14,270			459				
Bent No. 2	128	18.7	14,270			432				
Abut No. 2	47	14.5	2,465			288		54	13	
Total Bridge	375	699.9	223,945	1,203		1,548	370	108	26	

Notes: ① Dry Excavation based on Lower Roadway Profile.
② The cost of 25 C.Y. Porous Backfill Material to be included in Item 710-10.
③ Wing Post quantities are included in Superstructure Quantities.
④ The cost of Polyethylene Sheeting and all miscellaneous items necessary for installation to be included in Item 710-10.
⑤ Pavement at Bridge Ends quantities are included in Superstr. Quantities, includes 87.4 C.Y. Class "A" Concrete, 26,850 lb Reinforcing Steel, 120 L.F. HP 10x42 Piles and 232 S.Y. Linseed Oil Treatment.
⑥ The cost of 16 Threaded Steel Inserts and 16 7/8" ϕ x 4" hex head bolts, (A307), to be included in bridge items bid on.

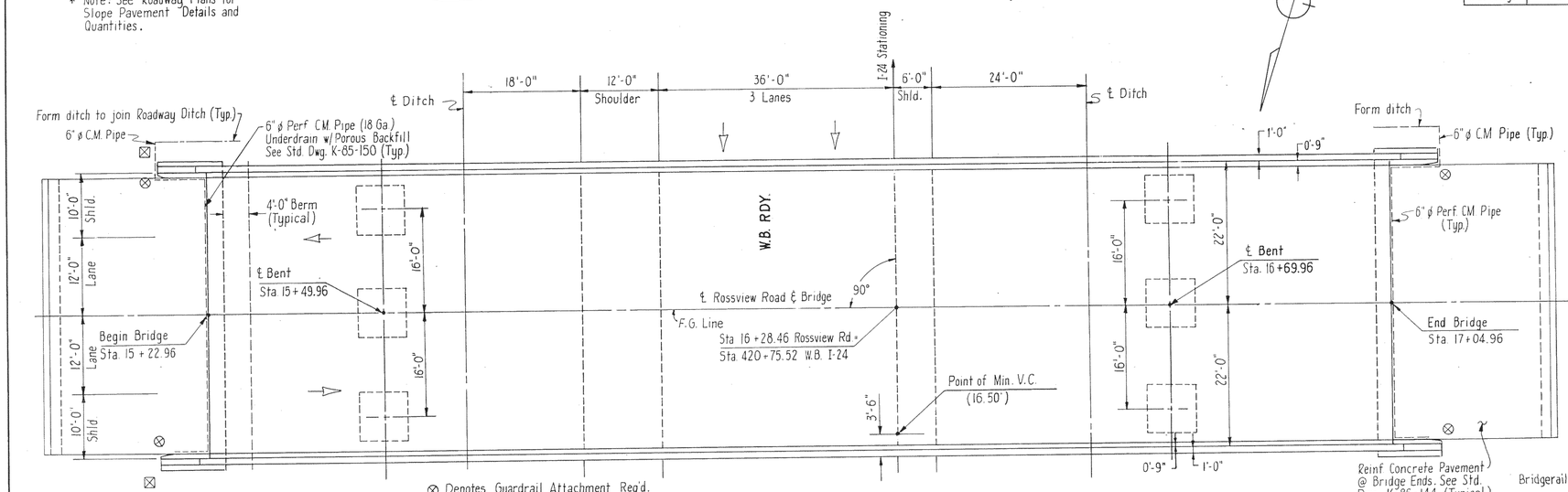

⊗ Denotes Guardrail Attachment Req'd.
⊠ Denotes Roadway Drainage Structure Req'd.

PLAN

GENERAL NOTES

Specifications: Standard Road and Bridge Specifications of the Tennessee Department of Highways (1968 Edition).

Design Specifications: A.A.S.H.O. 1969 Edition with addenda.

Loading: HS20-44.

Concrete: To be Class "A" Cast-in-Place, f'_c = 3,000 p.s.i. See Special Provision regarding Section 604-Concrete Structures.

Reinforcing Steel: To be A.S.T.M. A615, Grade 40, f_s = 20,000 p.s.i. Standard C.R.S.I. Hook Details apply unless otherwise noted on Bill of Steel. Bending Dimensions shown are based on Grade 40. Spacing dimensions are center to center unless otherwise noted on detail drawings.

Piles: To be HP10x42 Steel Piles to be driven to refusal on rock or a minimum bearing of 31 tons for the Bents and 35 tons for the Abutments.

Finishing Concrete Surfaces: Concrete Finishing shall be in accordance with Section 604.22 of the Tennessee Std. Specifications except as modified by the Special Provisions regarding Section 604-Concrete Structures. A Textured Coated Finish shall be used in lieu of a Class 2 Finish. The color of the finish shall be similar to Aztec Gold or Cypress Green and a color sample shall be submitted to Bridge Engr. for approval. The cost of Finishing Concrete Surfaces is to be included in the cost of Class "A" Concrete. In addition to the requirements of Section 604.22 of the Tenn. Std. Specifications and Special Provisions regarding Section 604-Concrete Structures, the entire visible Concrete Surfaces except the roadway surfaces, and including the slope paving, shall a Texture Coated Finish. The slope paving shall be Cypress Green and all other exposed concrete shall be Aztec Gold.

Linseed Oil Protective Treatment: Surfaces receiving a Texture Coated Finish shall not receive a Linseed Oil Treatment. See Special Provisions regarding Section 604-Concrete Structures.

Bridgerail: Build Bridgerail according to Std. Dwg. No. K-38-154 A. Dimension shown are measured along centerline of base plates. See dimensions on Elevation View on this sheet.

Bridge Deck Sealant: The Bridge Deck and reinforced approach slab shall be sealed in accordance with the Special Provision Regarding Coal Tar Interlayer Protective Coat. Bridge Deck Sealant will be included in a future paving project. (1011 S.Y. required)

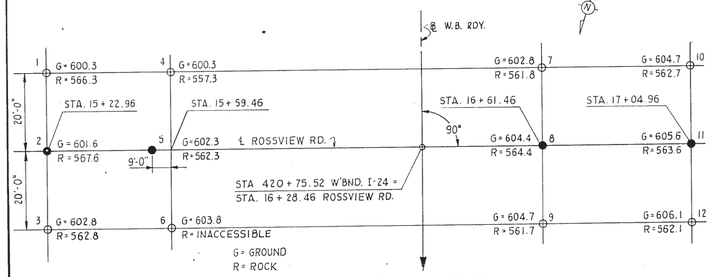

SOUNDING SKETCH

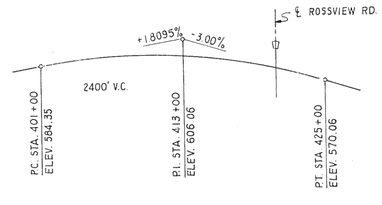

FINISHED GRADE W.B. I-24

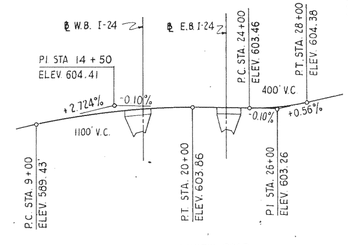

FINISHED GRADE ROSSVIEW ROAD

TRAFFIC DATA

Rossview Road A.D.T. 1971 - 850
A.D.T. 1991 - 2,100

44'-0" ROADWAY WITH PARAPETS
STATE OF TENNESSEE
DEPARTMENT OF HIGHWAYS
NASHVILLE

LAYOUT OF BRIDGE NO. 7
ROSSVIEW ROAD
OVER WEST BOUND I-24
STA. 420+75.52
MONTGOMERY COUNTY
1972

CORRECT: H. W. Hendrick — BRIDGE ENGINEER
APPROVED: Louis Evans — STATE HIGHWAY ENGINEER

K-99-110

BRIGHTON ENGINEERING COMPANY

DESIGNED BY E.D.T. DATE 10/71
DRAWN BY N.S.G. DATE 10/71
TRACED BY J.D.M. DATE 11/71
CHECKED BY E.D.T. DATE 11/71

A.A.C.D. = 11.9 c.y.

MICROFILMED

FED. ROAD DIST. NO.	STATE	FED. AID PROJ. NO.	FISCAL YEAR	SHEET NO.	TOTAL SHEETS
3	TENN.	EBI-24-3(13)4	1972	44	

REVISIONS

NO.	DATE	BY	BRIEF DESCRIPTION
1	11-10-72	HMB	Locate Optional Construction Joint.

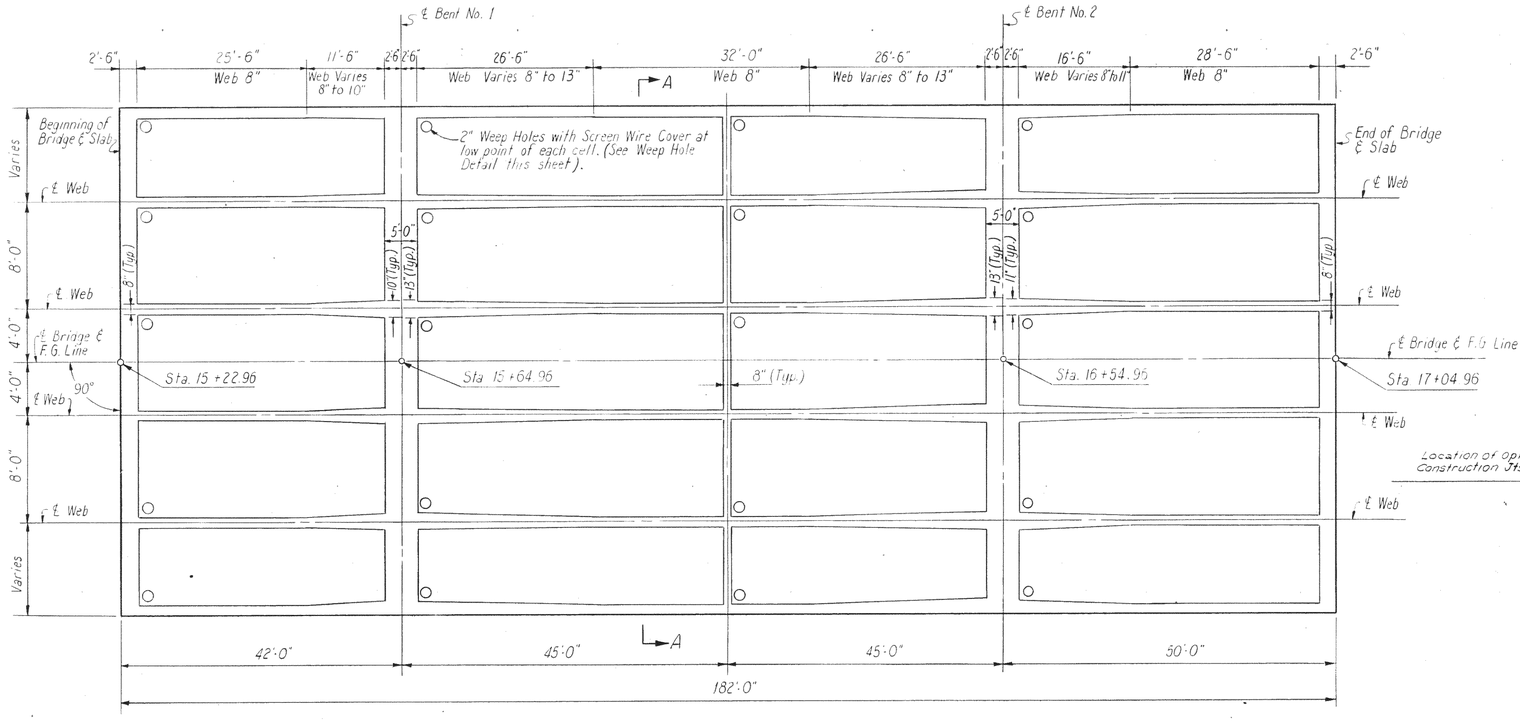

FRAMING PLAN

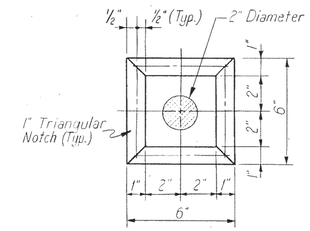

WEEP HOLE DETAIL

Showing 2" ø Weep Hole with Screen Wire Cover. Typical at Low Point of each Cell.

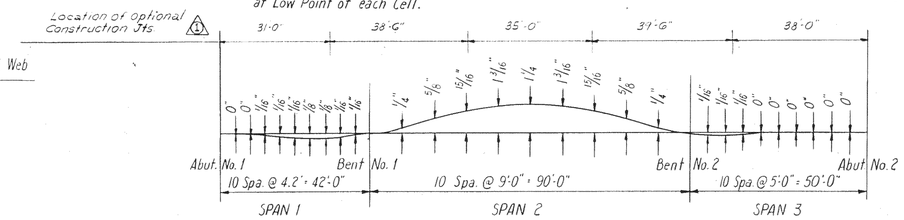

DEAD LOAD CORRECTION CURVE

Note: This Curve is for dead load only and should be increased by the amount of anticipated take up in the falsework.

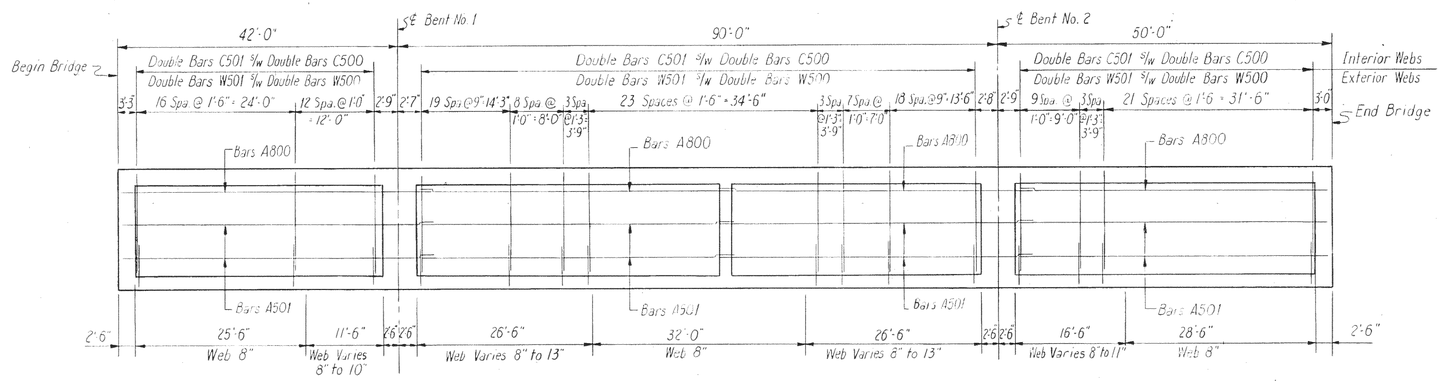

LONGITUDINAL SECTION

CONSTRUCTION SEQUENCE

Forms and Supports for the entire Bottom Slab shall be in place prior to the placement of Superstructure Concrete. Concrete for the Top and Bottom Slab and walls may be placed in any sequence, however construction Jts. will be permitted at designated locations only.
No Top Slab Concrete may be placed until all the walls have been Completed.

ESTIMATED QUANTITIES *

Item	Class "A" Concrete C.Y.	Reinforcing Steel Lb.
Rossview Road Bridge	633.5	130,475

* Note: Concrete quantities include all concrete above Abutment and Bent Footings. Reinforcement is as shown in Bill of Steel.

STATE OF TENNESSEE
DEPARTMENT OF HIGHWAYS
NASHVILLE

SUPERSTRUCTURE DETAILS

ROSSVIEW ROAD OVER W.B. I-24
STA. 420+75.52
MONTGOMERY COUNTY
1972

CORRECT G. W. Sherrick — BRIDGE ENGINEER
APPROVED Lewis Evans — STATE HIGHWAY ENGINEER

K-99-111

BRIGHTON ENGINEERING COMPANY

		DATE
DESIGNED BY	E.D.T.	10/71
DRAWN BY	N.S.G.	10/71
TRACED BY	J.D.M.	11/71
CHECKED BY	E.D.T.	11/71

MICROFILMED

FED. ROAD DIST. NO.	STATE	FED. AID PROJ. NO.	FISCAL YEAR	SHEET NO.	TOTAL SHEETS
3	TENN.	EB I-24-2(13)4	1972	45	

REVISIONS

NO.	DATE	BY	BRIEF DESCRIPTION

Note: Minimum Lap for
4 Bar = 1'-0"
5 Bar = 1'-3"
6 Bar = 1'-6"
8 Bar = 3'-0"
10 Bar = 3'-5"
11 Bar = 4'-3"

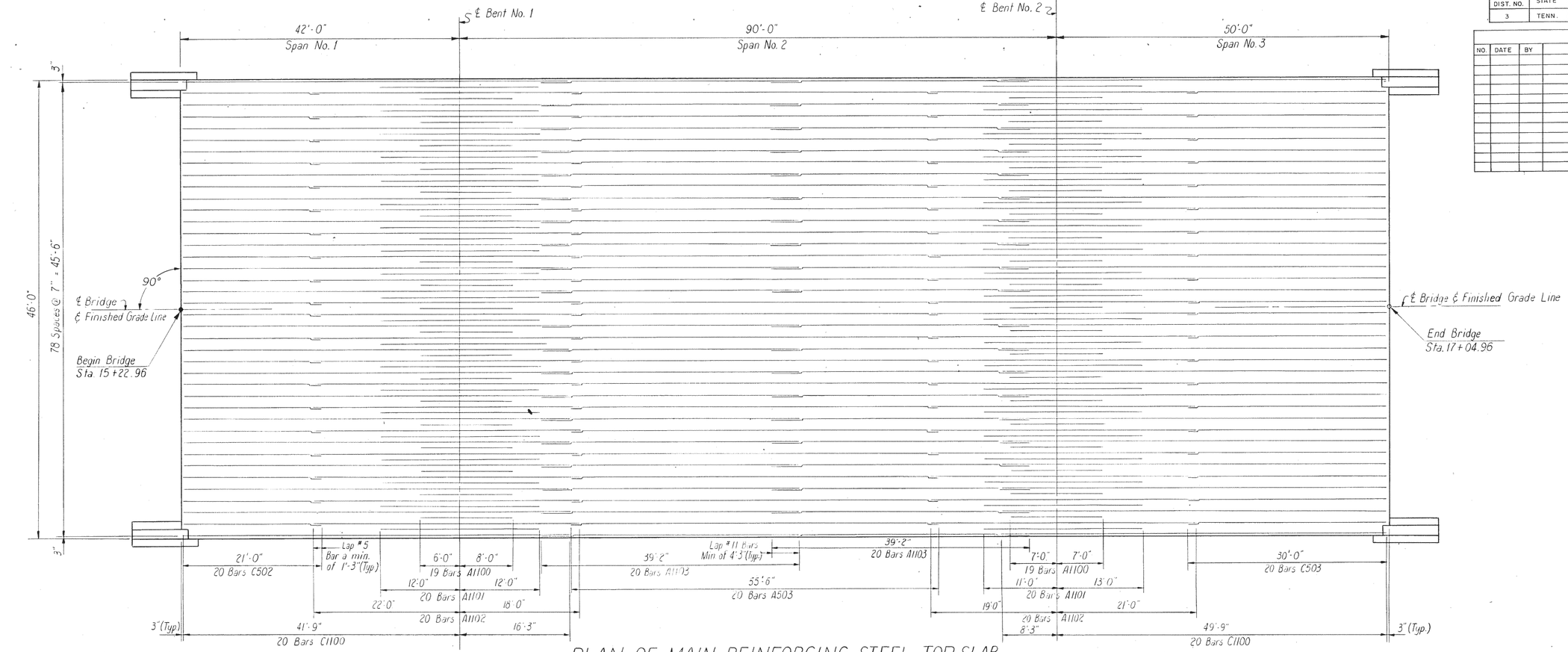

PLAN OF MAIN REINFORCING STEEL - TOP SLAB

Note: All Bars shown are located in top of Top Slab.

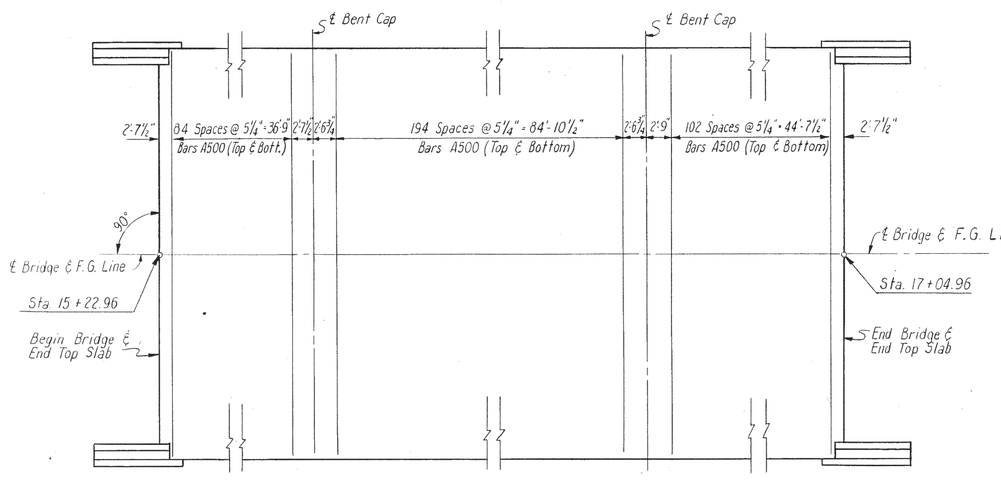

PLAN OF TOP SLAB

(Showing Transverse Steel)

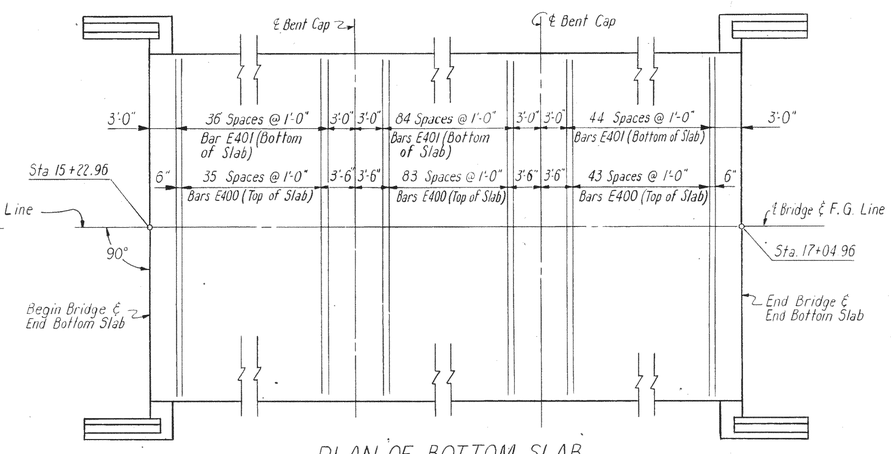

PLAN OF BOTTOM SLAB

(Showing Transverse Steel)

		DATE
DESIGNED BY	E.D.T.	10/71
DRAWN BY	N.S.G.	10/71
TRACED BY	J.D.M.	11/71
CHECKED BY	E.D.T.	11/71

STATE OF TENNESSEE
DEPARTMENT OF HIGHWAYS
NASHVILLE

SUPERSTRUCTURE DETAILS

ROSSVIEW ROAD OVER W.B. I-24
STA. 420+75.52
MONTGOMERY COUNTY
1972

CORRECT H. W. Herbick
BRIDGE ENGINEER

APPROVED Louis Evans
STATE HIGHWAY ENGINEER

K-99-112

BRIGHTON ENGINEERING COMPANY

MICROFILMED

FED. ROAD DIST. NO.	STATE	FED. AID PROJ. NO.	FISCAL YEAR	SHEET NO.	TOTAL SHEETS
3	TENN.	EBI-24-3(13)4	1972	46	

REVISIONS

NO.	DATE	BY	BRIEF DESCRIPTION
1	12-7-72	CWT	LOCATE CONST. JOINTS

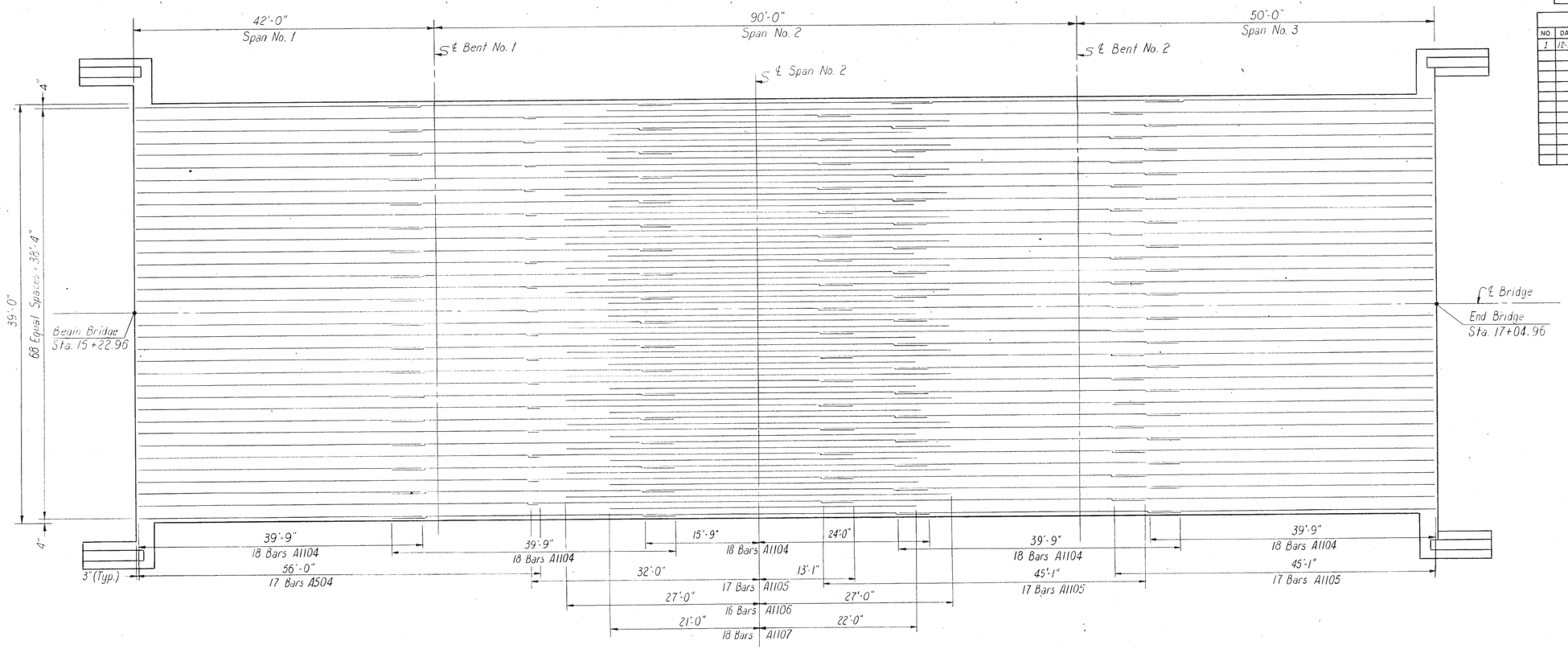

PLAN OF MAIN REINFORCING - BOTTOM SLAB

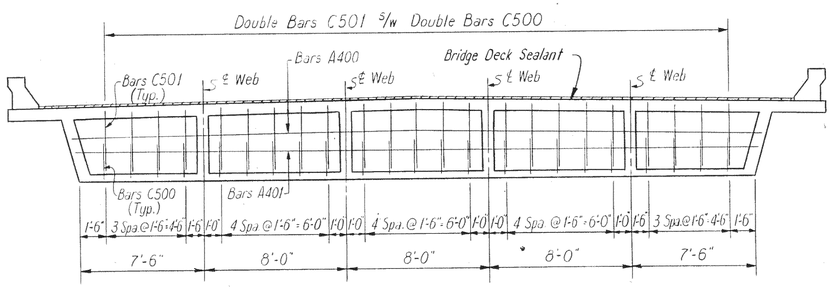

SECTION A-A

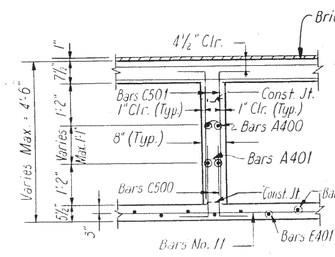

TYPICAL SECTION THRU DIAPHRAGM

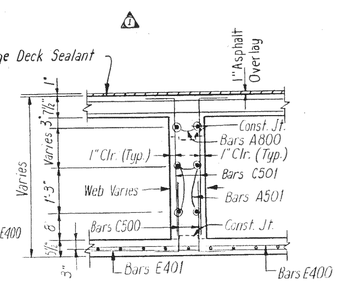

TYPICAL SECTION THRU INTERIOR WEB

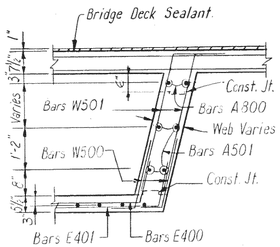

TYPICAL SECTION THRU EXTERIOR WEB

		DATE
DESIGNED BY	E.D.T.	10/71
DRAWN BY	N.S.G.	10/71
TRACED BY	J.D.M.	11/71
CHECKED BY	E.D.T.	11/71

MICROFILMED

STATE OF TENNESSEE
DEPARTMENT OF HIGHWAYS
NASHVILLE

SUPERSTRUCTURE DETAILS

ROSSVIEW ROAD OVER W.B. I-24
STA. 420+75.52
MONTGOMERY COUNTY
1972

CORRECT H. M. Dettrick
BRIDGE ENGINEER
APPROVED Louis Evans
STATE HIGHWAY ENGINEER

K-99-113

BRIGHTON ENGINEERING COMPANY

FED. ROAD DIST. NO.	STATE	FED. AID PROJ. NO.	FISCAL YEAR	SHEET NO.	TOTAL SHEETS
3	TENN.	EB I-24-2(13)4	1972	47	

REVISIONS

NO.	DATE	BY	BRIEF DESCRIPTION
1	11-10-72	HMB	Locate Construction Joints.
2	1/31/73	CNT	Rev. Location Fin. Grade Point

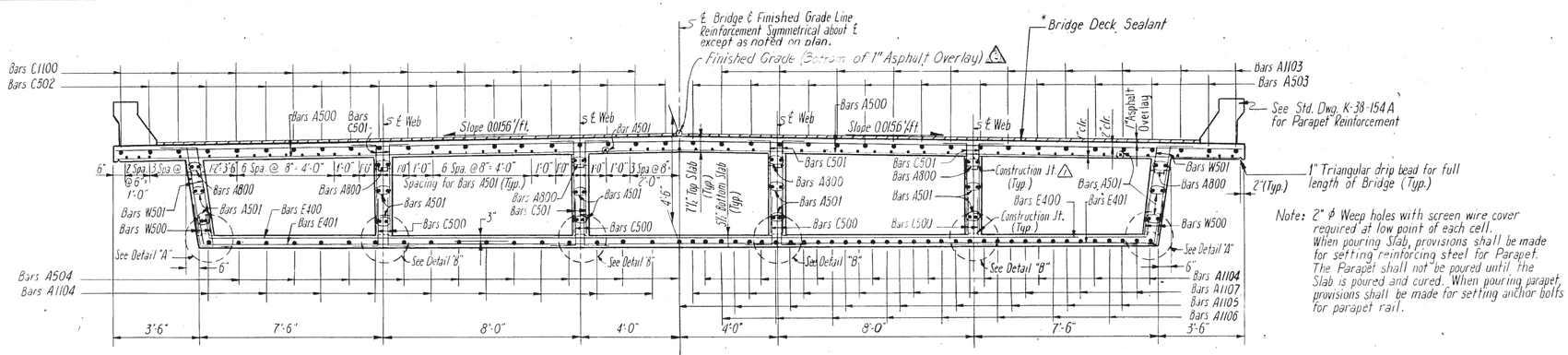

HALF SECTION NEAR ℄ SPAN 1

HALF SECTION NEAR ℄ SPAN 2

* See Bridge Deck Sealant note on Dwg. No. K-99-110

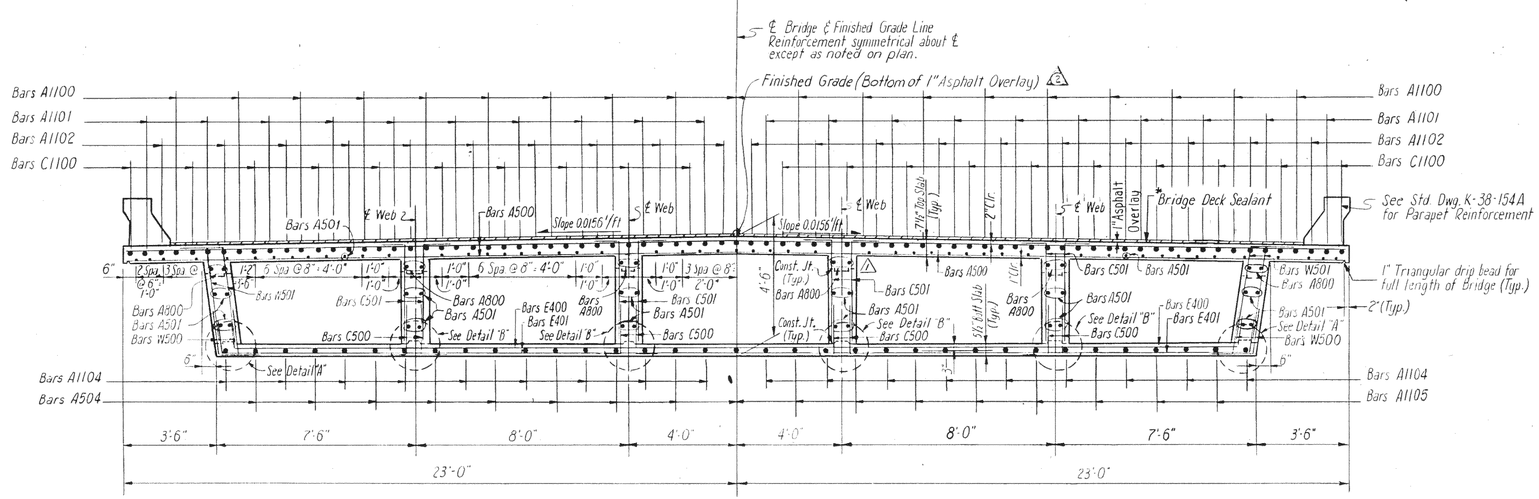

HALF SECTION NEAR BENT NO. 1

HALF SECTION NEAR BENT NO. 2

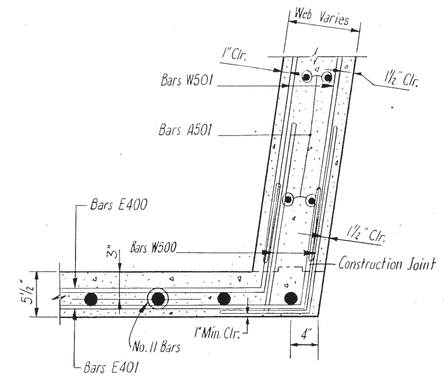

DETAIL "A"

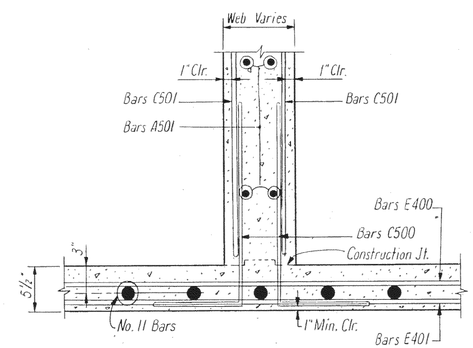

DETAIL "B"

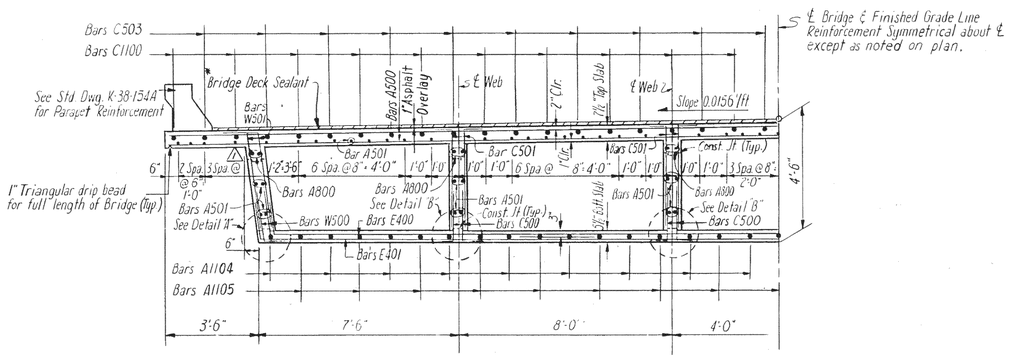

HALF SECTION NEAR ℄ SPAN 3

DESIGNED BY	E.D.T.	DATE 10/71
DRAWN BY	N.S.G.	DATE 10/71
TRACED BY	J.D.M.	DATE 11/71
CHECKED BY	E.D.T.	DATE 11/71

STATE OF TENNESSEE
DEPARTMENT OF HIGHWAYS
NASHVILLE

SUPERSTRUCTURE DETAILS

ROSSVIEW ROAD OVER W.B. I-24
STA. 420+75.52
MONTGOMERY COUNTY
1972

CORRECT — BRIDGE ENGINEER
APPROVED — STATE HIGHWAY ENGINEER

K-99-114

BRIGHTON ENGINEERING COMPANY

MICROFILMED

FED. ROAD DIST. NO.	STATE	FED. AID PROJ. NO.	FISCAL YEAR	SHEET NO.	TOTAL SHEETS
3	TENN.	EB I-24-2(4)	1972	48	

REVISIONS

NO.	DATE	BY	BRIEF DESCRIPTION
1	11-10-72	H.M.B.	Bars A563 Changed To Bars X560
2	12-13-72	C.W.T.	REVISED LOCATION FIN. GRADE POINT

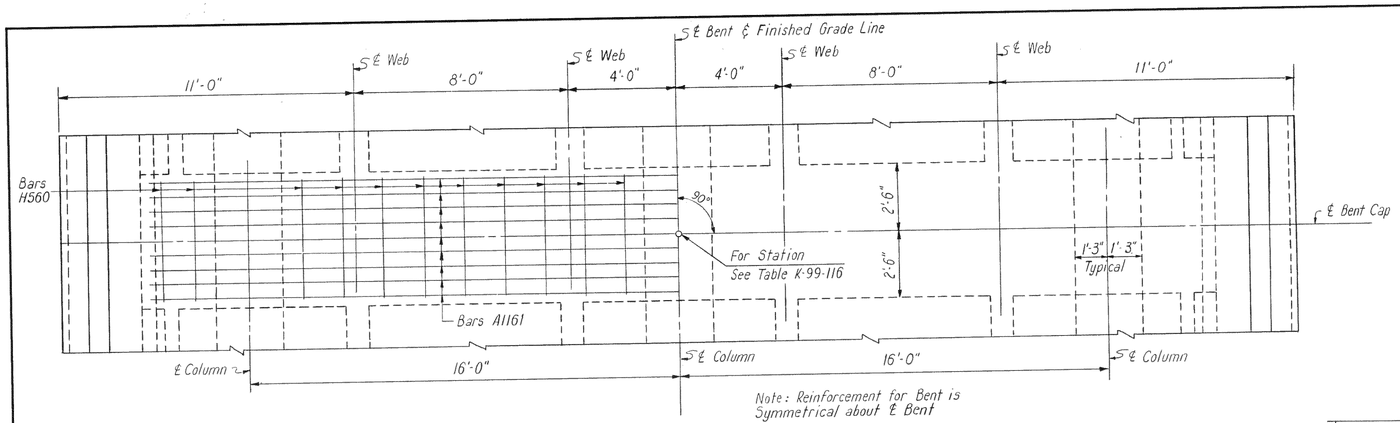

PLAN

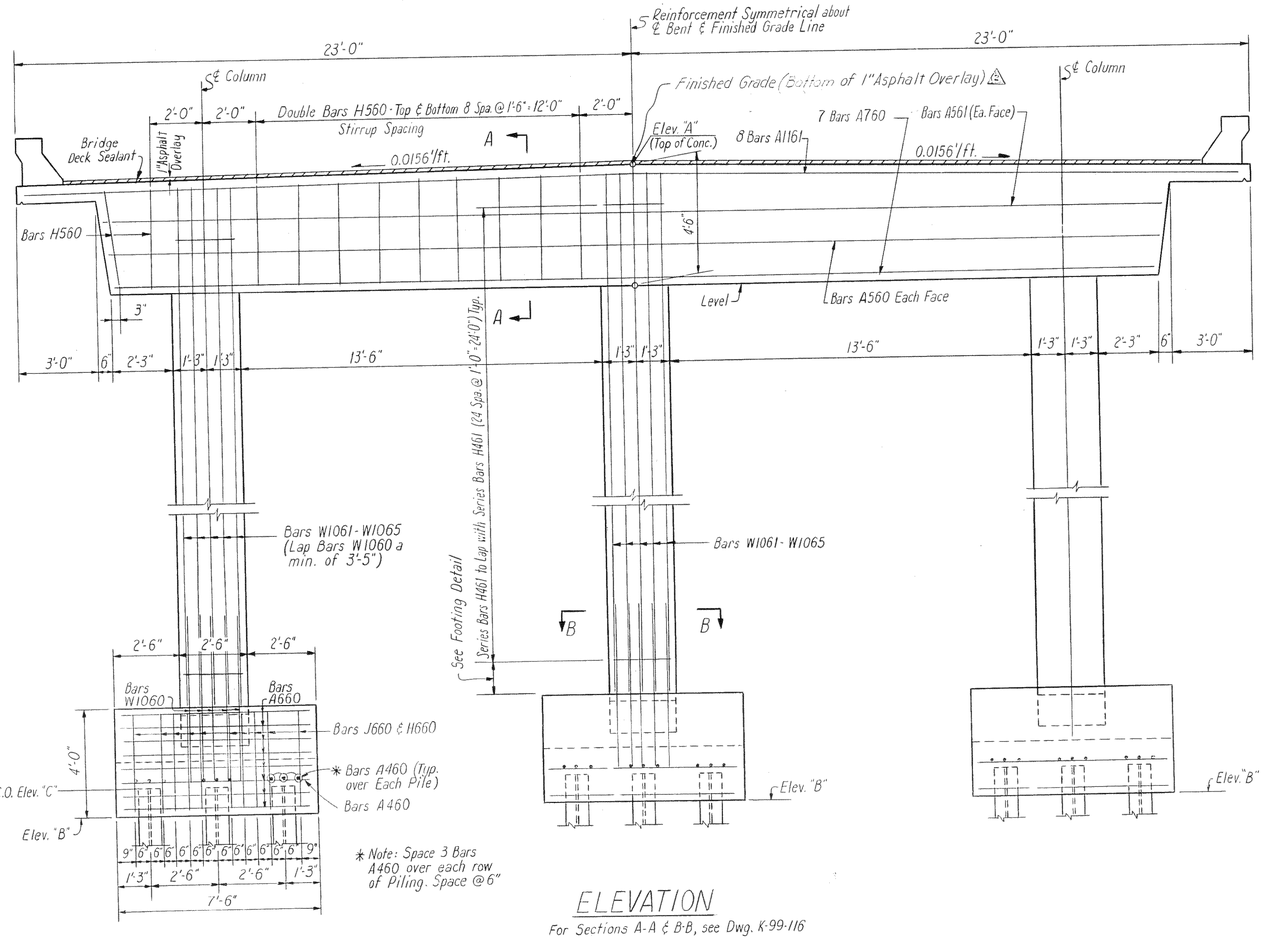

ELEVATION

For Sections A-A & B-B, see Dwg. K-99-116

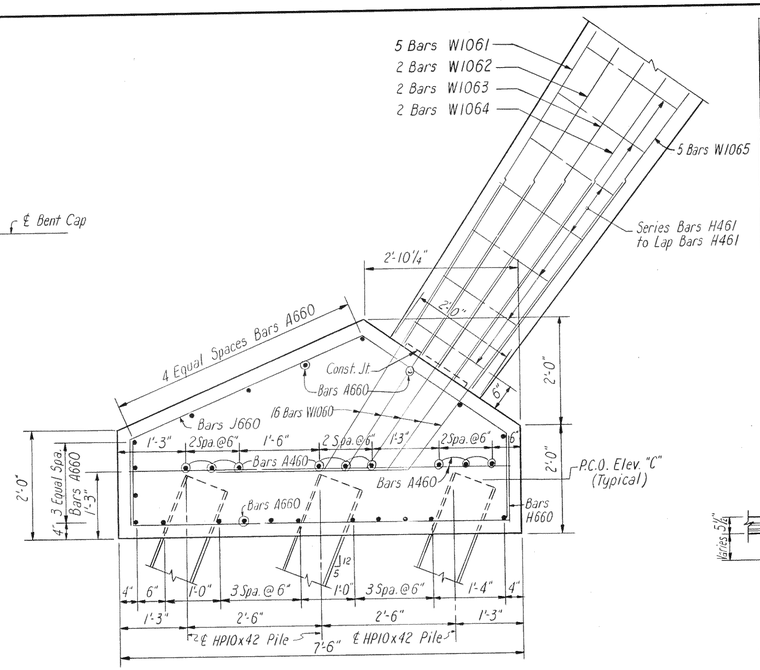

TYPICAL FOOTING DETAIL

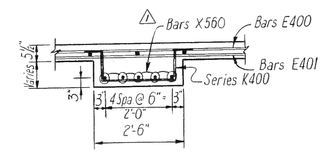

SECTION C-C

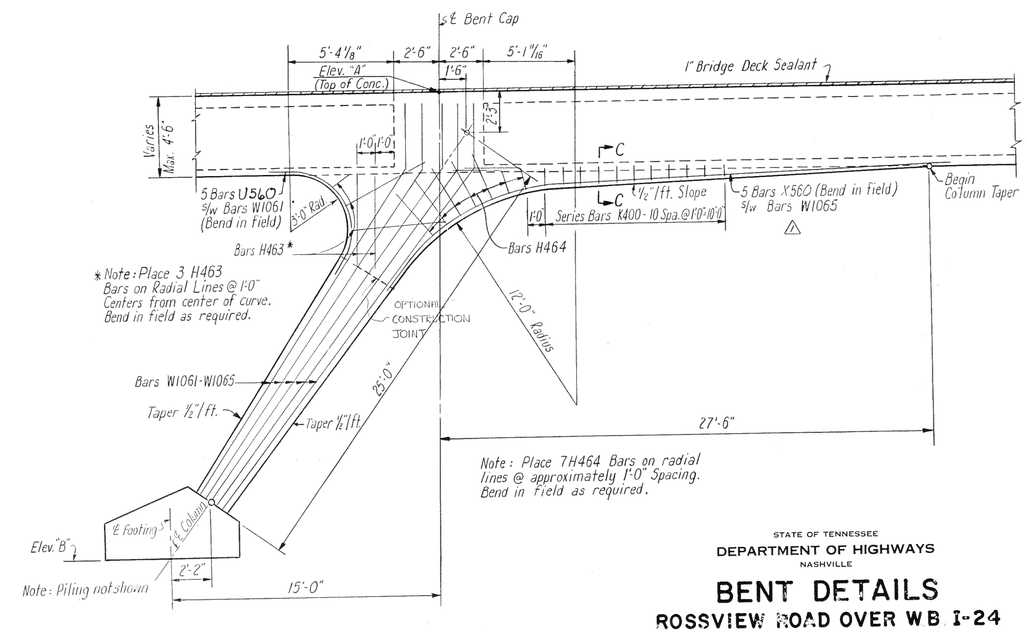

END ELEVATION

STATE OF TENNESSEE
DEPARTMENT OF HIGHWAYS
NASHVILLE

BENT DETAILS

ROSSVIEW ROAD OVER W.B. I-24
STA. 420+75.52
MONTGOMERY COUNTY
1972

CORRECT — BRIDGE ENGINEER

APPROVED — STATE HIGHWAY ENGINEER

K-99-115

BRIGHTON ENGINEERING COMPANY

		DATE
DESIGNED BY	E.D.T.	10/71
DRAWN BY	N.S.G.	10/71
TRACED BY	S.M.	11/71
CHECKED BY	E.D.T.	11/71

MICROFILMED

DRAFTING MEDIA GRAPHIC CONTROLS CORPORATION Buffalo, New York Printed in U.S.A. ASTROFILM® N685.4

FED. ROAD DIST. NO.	STATE	FED. AID PROJ. NO.	FISCAL YEAR	SHEET NO.	TOTAL SHEETS
3	TENN.	EB I-24-3(13)4	1972	49	

REVISIONS

NO.	DATE	BY	BRIEF DESCRIPTION
1	11-10-72	WMB	Locate Construction Joint.
2	12-14-72	C.W.T.	Rev. Table of Elevations

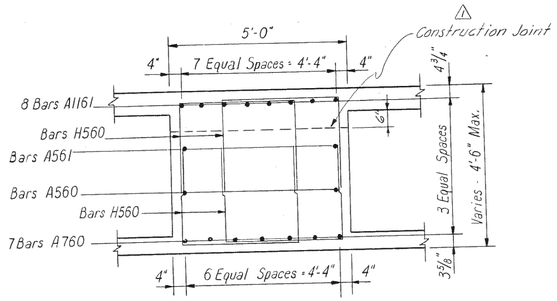

SECTION A-A

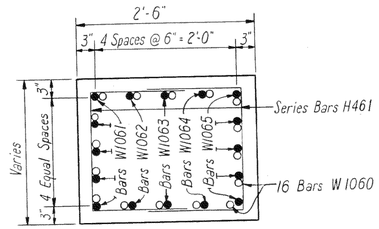

SECTION B-B

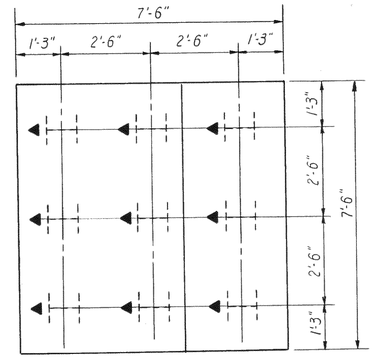

PILING LAYOUT

TABLE OF STATIONS AND ELEVATIONS △2

Item	Station	ELEVATION			
		A	B	C	
BENT NO. 1	15 + 64.96	601.87	576.07	577.07	
BENT NO. 2	16 + 54.96	602.68	576.86	577.86	

ESTIMATED QUANTITIES *

Item	Class "A" Concrete C.Y.	Reinforcing Steel Lb.
BENT NO. 1	18.7	14,270
BENT NO. 2	18.7	14,270

* Note: Concrete quantities include only the Footings; Concrete above Footings included in Superstructure. Reinforcement quantities are as shown in Bill of Steel.

STATE OF TENNESSEE
DEPARTMENT OF HIGHWAYS
NASHVILLE

BENT DETAILS
ROSSVIEW ROAD OVER W.B. I-24
STA. 420 + 75.52
MONTGOMERY COUNTY
1972

CORRECT _____ BRIDGE ENGINEER

APPROVED _____ STATE HIGHWAY ENGINEER

K-99-116

BRIGHTON ENGINEERING COMPANY

		DATE
DESIGNED BY	E.D.T.	10/71
DRAWN BY	N.S.G.	10/71
TRACED BY	J.D.M.	11/71
CHECKED BY	E.D.T.	11/71

MICROFILMED
DRAFTING MEDIA GRAPHIC CONTROLS CORPORATION Buffalo, New York Printed in U.S.A. ASTROFILM® N683.4

FED. ROAD DIST. NO.	STATE	FED. AID PROJ. NO.	FISCAL YEAR	SHEET NO.	TOTAL SHEETS
3	TENN.	EBI-24-9(13)4	1972	50	

REVISIONS

NO.	DATE	BY	BRIEF DESCRIPTION
1	12-14-72	CWT	Rev. Fin. Gr. Pr. & Table of Elev.

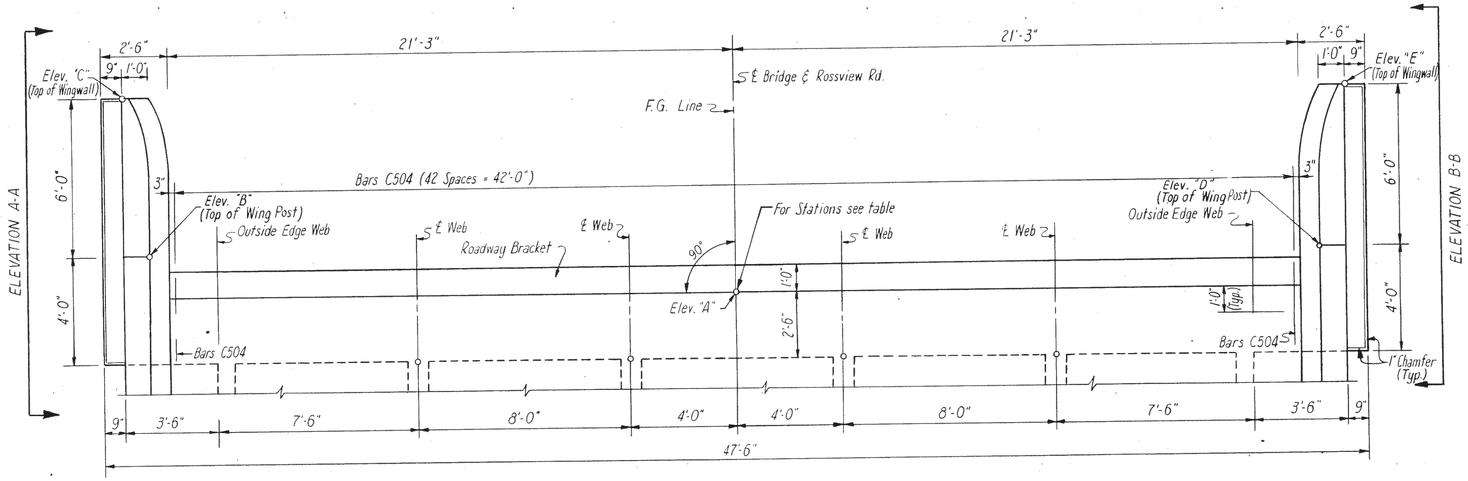

PLAN

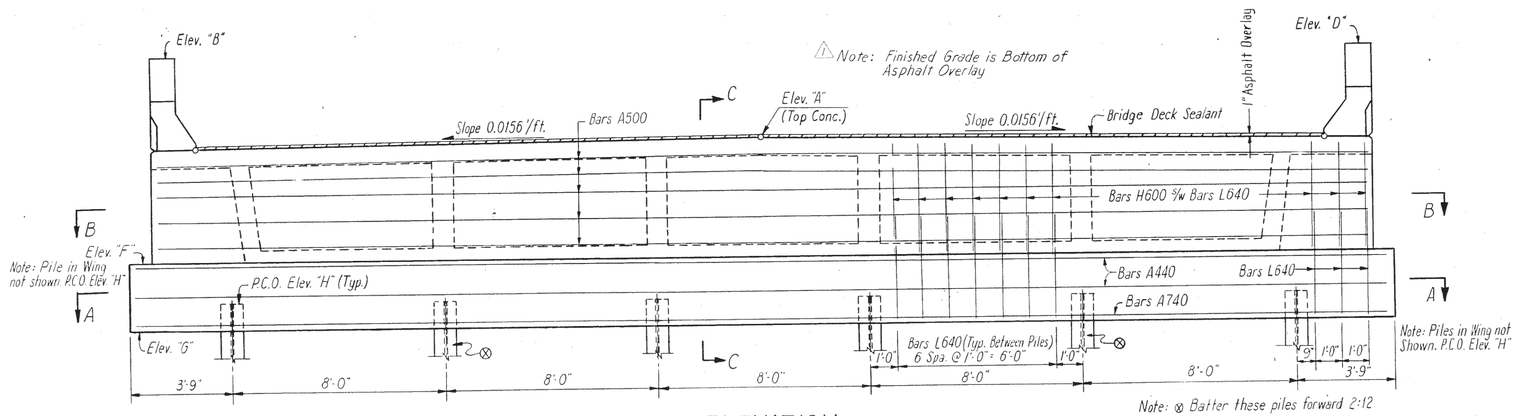

ELEVATION

Abutment No. 1 - Looking back on ℄ Survey
Abutment No. 2 - Looking forward on ℄ Survey

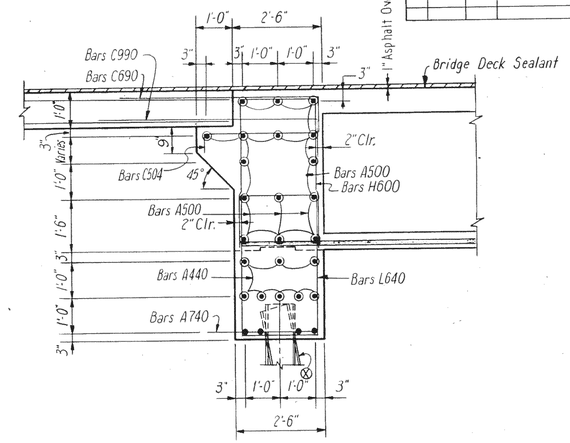

SECTION C-C

TABLE OF STATIONS AND ELEVATIONS ⚠

Item	Station	ELEVATION							
		A	B	C	D	E	F	G	H
Abutment No. 1	15+22.96	601.42	604.51	600.99	604.51	600.99	596.93	594.43	595.43
Abutment No. 2	17+04.96	603.04	606.12	602.74	606.12	602.74	598.53	596.03	597.03

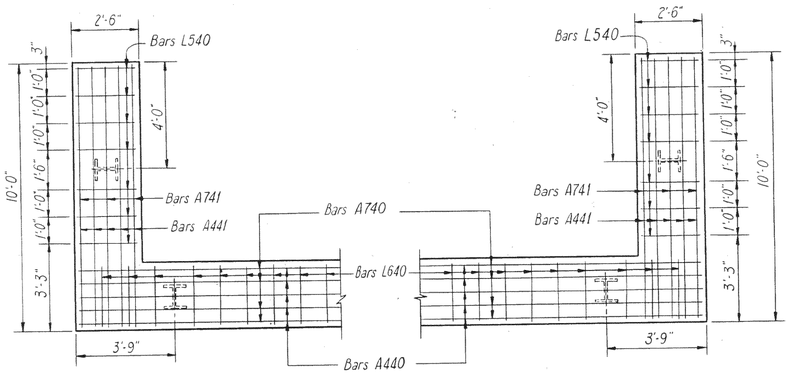

SECTION A-A

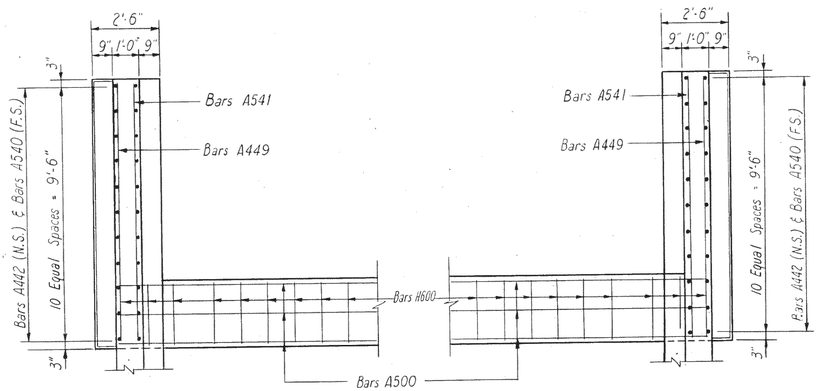

SECTION B-B

DESIGNED BY E.D.T. DATE 10-71
DRAWN BY N.S.G. DATE 10-71
TRACED BY J.D.M. DATE 11-71
CHECKED BY E.D.T. DATE 11-71

STATE OF TENNESSEE
DEPARTMENT OF HIGHWAYS
NASHVILLE

ABUTMENT DETAILS

ROSSVIEW ROAD OVER W.B. I-24
STA. 420+75.52
MONTGOMERY COUNTY
1972

CORRECT Hilton Huck
BRIDGE ENGINEER
APPROVED Harris Evans
STATE HIGHWAY ENGINEER

K-99-117

BRIGHTON ENGINEERING COMPANY

FED. ROAD DIST. NO.	STATE	FED. AID PROJ. NO.	FISCAL YEAR	SHEET NO.	TOTAL SHEETS
3	TENN.	EB-I-24-3(12)4	1972	51	

REVISIONS

NO.	DATE	BY	BRIEF DESCRIPTION

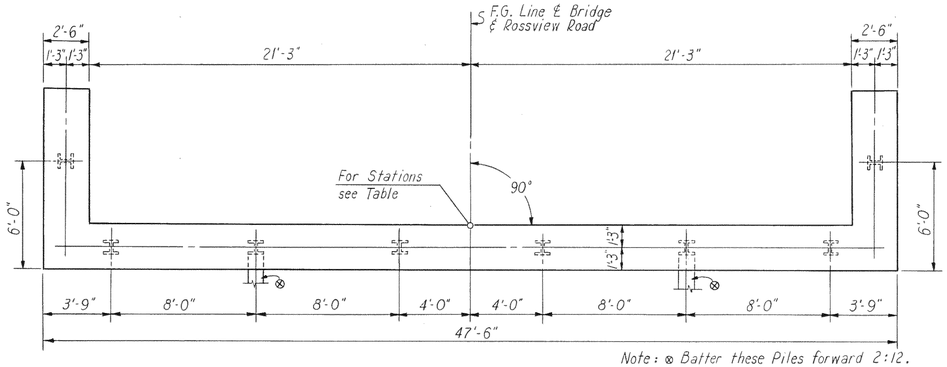

PILE LAYOUT PLAN

Abutment No. 1 - Looking Back on ℄ Survey.
Abutment No. 2 - Looking Forward on ℄ Survey.

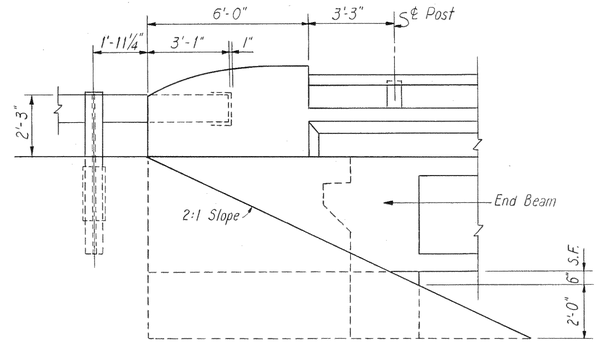

SKETCH SHOWING BRIDGERAIL, WING POST AND GUARDRAIL TREATMENT AT END OF BRIDGE

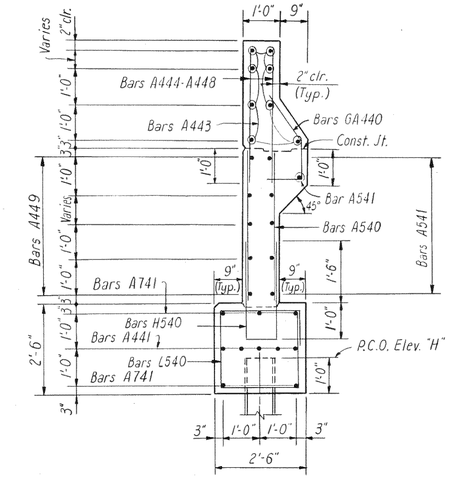

SECTION D-D

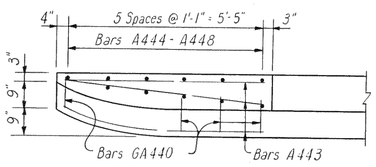

SECTION E-E

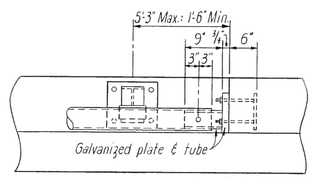

Note: Tubing and base plate material shall be of weldable carbon steel with a minimum yield point of 36 k.s.i. galvanized according to ASTM A123 Specifications after fabrication.

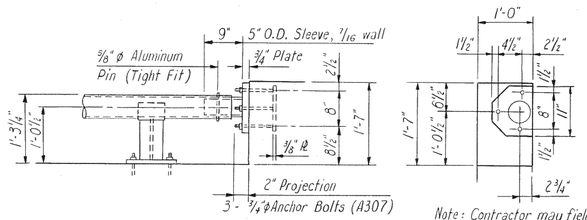

RAILING DETAILS

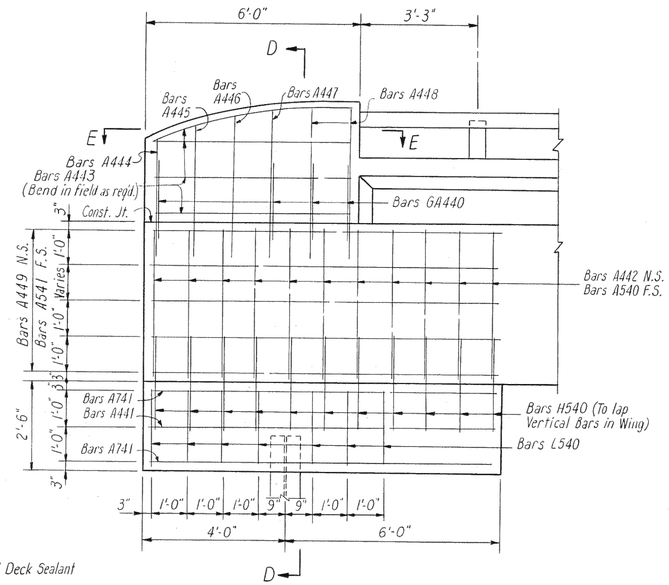

ELEVATION A-A

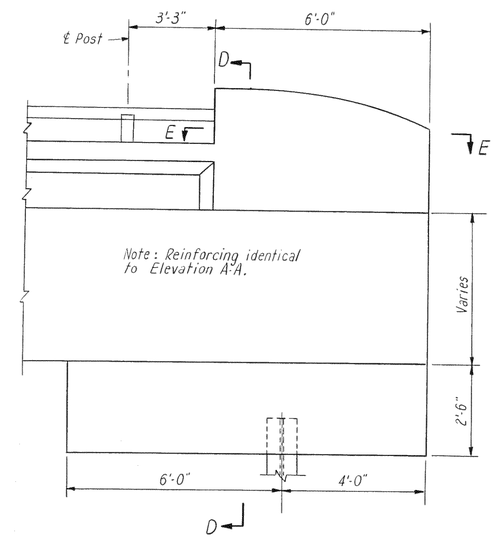

ELEVATION B-B

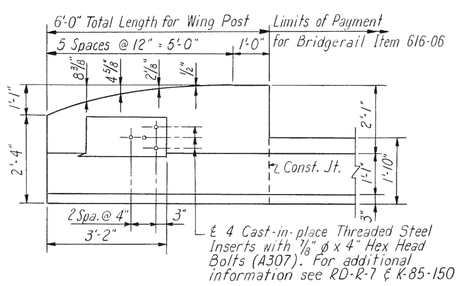

ELEVATION

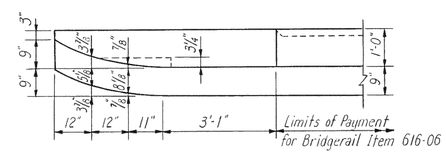

PLAN

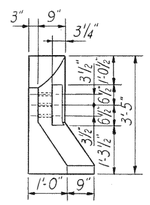

END ELEVATION

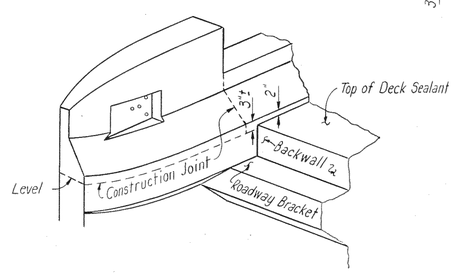

ISOMETRIC OF WING POST

WING POST DETAILS

ESTIMATED QUANTITIES *

Item	Class "A" Concrete Cu. Yds.	Reinf. Steel Lbs.
Abut. No. 1	14.5	2445
Abut. No. 2	14.5	2445

* Concrete quantities include only the Footings; all Concrete above Footings included in the Superstructure. Reinforcement quantities are as shown in Bill of Steel.

STATE OF TENNESSEE
DEPARTMENT OF HIGHWAYS
NASHVILLE

ABUTMENT DETAILS
ROSSVIEW ROAD OVER W.B. I-24
STA. 420+75.52
MONTGOMERY COUNTY
1972

CORRECT _____ BRIDGE ENGINEER
APPROVED _____ STATE HIGHWAY ENGINEER

K-99-118

BRIGHTON ENGINEERING COMPANY

DESIGNED BY	E.D.T.	DATE 10/71
DRAWN BY	N.S.G.	DATE 10/71
TRACED BY	J.D.M.	DATE 11/71
CHECKED BY	E.D.T.	DATE 11/71

MICROFILMED

DRAWING MEDIA GRAPHIC CONTROLS CORPORATION Buffalo, New York Printed in U.S.A. ASTROFILM® N685.4

BILL OF STEEL

FED. ROAD DIST. NO.	STATE	FED. AND PROJ. NO.	FISCAL YEAR	SHEET NO.	TOTAL SHEETS
3	TENN.	EBI-24-3(13)4	1972	52	

REVISIONS

NO.	DATE	BY	BRIEF DESCRIPTION

SUPERSTRUCTURE

BAR	LOCATION	SIZE	NO. REQ'D	BENDING DIMENSIONS a	b	c	d	LENGTH
A400	Diaphragm	4	2					39'-4"
A401	Diaphragm	4	2					39'-1"
A500	Top Slab and End Beams	5	796					45'-8"
A501	Top Slab and Web	5	308					46'-5"
A503	Top Slab	5	20					55'-6"
A504	Bottom Slab	5	17					56'-0"
A800	Web	8	48					47'-8"
A1100	Top Slab	11	38					14'-0"
A1101	Top Slab	11	40					24'-0"
A1102	Top Slab	11	40					40'-0"
A1103	Top Slab	11	40					39'-2"
A1104	Bottom Slab	11	90					39'-9"
A1105	Bottom Slab	11	51					45'-1"
A1106	Bottom Slab	11	16					54'-0"
A1107	Bottom Slab	11	18					43'-0"
C500	Web & Diaphragm	5	1206	1'-11"				2'-9"
C501	Web & Diaphragm	5	1206	3'-7"				4'-5"
C502	Top Slab	5	20	21'-0"				21'-10"
C503	Top Slab	5	20	30'-0"				30'-10"
C504	End Beam	5	86	3'-2"				3'-8"
C1100	Top Slab	11	40	58'-0"				60'-0"
E400	Bottom Slab	4	164	38'-0"	1'-0"	1'-0"	1¾"	40'-0"
E401	Bottom Slab	4	167	38'-9"	1'-2"	1'-2"	1¾"	41'-11"
H600	End Beam	6	82	2'-2"	4'-1"			10'-4"
W500	Web	5	580	1'-9"	10"	10"	1¼"	2'-7"
W501	Web	5	580	3'-7"	10"	10"	1¼"	4'-5"

ABUTMENTS

BAR	LOCATION	SIZE	NO. REQ'D	BENDING DIMENSIONS a	b	c	d	LENGTH
A440	Cap Beam	4	16					47'-2"
A441	Wing Wall Footing	4	20					9'-8"
A442	Wing Wall	4	44					4'-0"
A443	Wing Post	4	32					5'-6"
A444	Wing Post	4	4					3'-4"
A445	Wing Post	4	8					3'-9"
A446	Wing Post	4	8					4'-0"
A447	Wing Post	4	8					4'-2"
A448	Wing Post	4	16					4'-3"
A449	Wing Wall	4	20					9'-8"
A540	Wing Wall	5	44					4'-0"
A541	Wing Wall	5	24					9'-8"
A740	Cap Beam	7	8					47'-2"
A741	Wing Wall Footing	7	20					9'-8"
L540	Wing Wall	5	28	2'-2"	1'-0"	2'-2"		9'-8"
L640	Cap Beam	6	82	2'-2½"	1'-0"	3'-11½"		13'-4"
A490	Approach Slab	4	100					42'-2"
A690	Approach Slab	6	86					24'-2"
A790	Approach Slab	7	16					42'-2"
A990	Approach Slab	9	170					24'-2"
A1190	Approach Slab	11	8					6'-0"
C690	Approach Slab	6	82	4'-4"				5'-4"
C990	Approach Slab	9	164	5'-4"				6'-4"
L590	Approach Slab	5	140	1'-2"	1'-0"	2'-2"		7'-8"
GA440	Wing Post	4	16	11"	12"	1'-5"		3'-7"
H540	Wing Wall	5	44	8"	2'-6"			5'-8"

BENTS

BAR	LOCATION	SIZE	NO. REQ'D	BENDING DIMENSIONS a	b	c	d	LENGTH
A460	Footing	4	108					7'-0"
A560	Cap	5	4					39'-1"
A561	Cap	5	4					39'-4"
A660	Footing	6	126					7'-0"
A760	Cap	7	14					38'-8"
A1161	Cap	11	16					45'-8"
H461	Column	4	12	"a" - 2'-2½", "b" varies from				151'-0"
	Series of 25 Bars Ea.	1'-5" to 2'-5" in equal increments						
H463	Column	4	30	2'-2½"	1'-6"			5'-3"
H464	Column	4	42	2'-2½"	3'-0"			8'-3"
H560	Cap	5	176	3'-3"	2'-7"			8'-5"
H660	Footing	6	60	7'-0"	1'-7"			10'-2"
J660	Footing	6	60	1'-6"	4'-9"	3'-3"	3'-4½"	11'-0"
K400	Column & Superstr.	4	6	"a" - 8", "b" - 2'-2½", "c" varies				57'-3"
	Series of 11 Bars	from 7½" to 1'-0½" in equal increments						
W1060	Footing & Column	10	96	7'-9"	1'-10"	1'-6½"	1'-0"	9'-7"
W1061	Column	10	30	21'-7"	3'-5"	1'-10"	2'-10½"	25'-0"
W1062	Column	10	12	22'-2"	3'-5"	1'-10½"	2'-10½"	25'-7"
W1063	Column	10	12	22'-9"	3'-5"	1'-11½"	2'-10½"	26'-2"
W1064	Column	10	12	23'-4"	3'-5"	2'-0"	2'-10½"	26'-9"
W1065	Column	10	30	24'-0"	3'-5"	2'-1"	2'-10½"	27'-5"
U560	Column & Cap	5	30					31'-7"
X560	Column & Cap	5	30					34'-7"

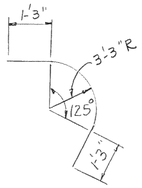

BARS U560

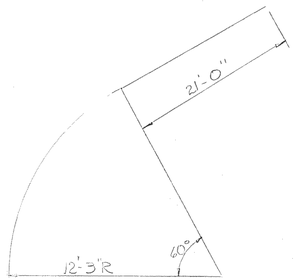

BARS X560

REINFORCING STEEL CODE

TYPE	SIZE	SERIES
A	5	06

NOTE: Dimensions shown on this sheet are outside to outside of bar. Standard C.R.S.I. Hook Details Shall Apply, Except As Noted.

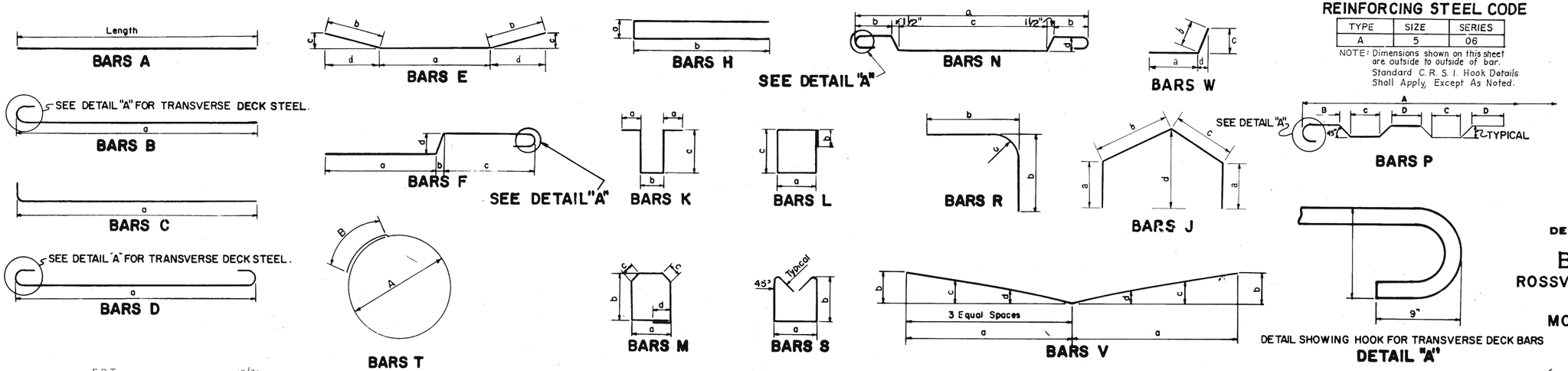

DESIGNED BY	E.D.T.	DATE	10/71
DRAWN BY	N.S.G.	DATE	10/71
TRACED BY	J.D.M.	DATE	11/71
CHECKED BY	E.D.T.	DATE	11/71

STATE OF TENNESSEE
DEPARTMENT OF HIGHWAYS
NASHVILLE

BILL OF STEEL
ROSSVIEW ROAD OVER W.B. I-24
STA. 420 + 75.52
MONTGOMERY COUNTY
1972

CORRECT: Alderthick — BRIDGE ENGINEER
APPROVED: Lewis Evans — STATE HIGHWAY ENGINEER

K-99-119

BRIGHTON ENGINEERING COMPANY

MICROFILMED

FED. ROAD DIST. NO.	STATE	FEDERAL AID PROJECT NO.	FISCAL YEAR	SHEET NO.	TOTAL SHEETS
3	TENN.	EB-I-24-3(13)4	1972	53	

LIST OF DRAWINGS

	DWG. NO.
Layout	K-99-120
Superstructure	K-99-121
Superstructure	K-99-122
Superstructure	K-99-123
Superstructure	K-99-124
Bent Details	K-99-125
Bent Details	K-99-126
Abutment Details	K-99-127
Abutment Details	K-99-128
Bill of Steel	K-99-129
Bridgerail	K-38-154A
Standard Reinf. Bar Support Details for Concrete Slabs	K-80-14
Reinf. Concrete Pavement @ Bridge Ends	K-86-144
Miscellaneous Abutments & Drainage Details	K-85-150
Pile Splice Detail - Steel Piles	H-5-111
Standard Metal Deep Beam Guardrail	RD-R-7

REVISIONS

NO.	DATE	BY	BRIEF DESCRIPTION
1	11-4-74	M.K.	Dry Excavation @ Abuts. Added

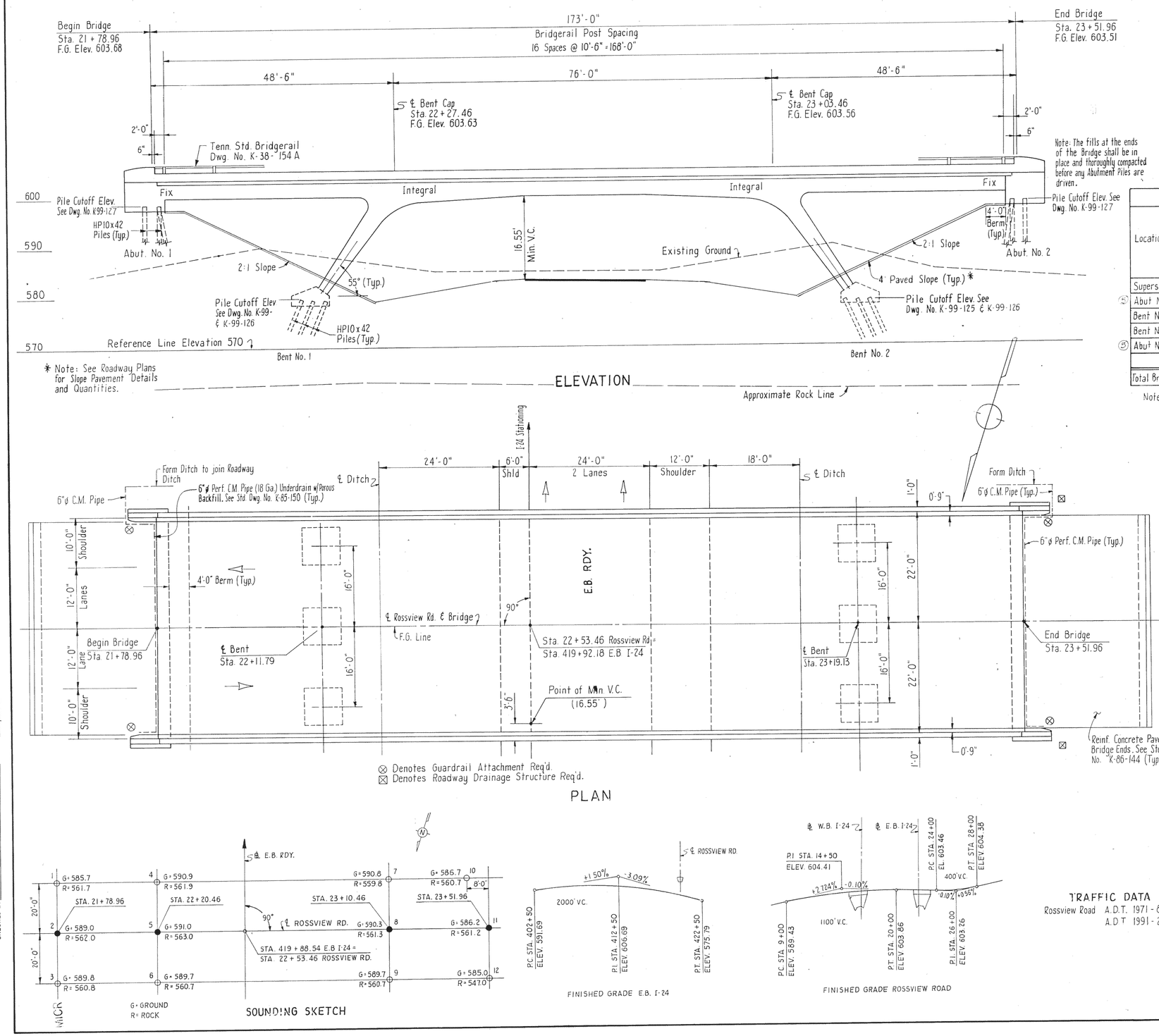

ESTIMATED QUANTITIES

Location	204-02.01 Dry Excavation (Bridges) C.Y. ①	604-03.01 Class "A" Concrete (Bridges) C.Y.	604-03.02 Steel Bar Reinf. (Bridges) Lb.	604-03.03 Linseed Oil Treatment S.Y.		606-02.03 Steel Piles HP10 x 42 L.F.	616-06 Conc. Parapet w/ Structural Tubing (K-38-154A) L.F.	710-10 6"ϕ Perf. C.M. Pipe (18 Ga.) w/ Granular Backfill ② L.F. ④	710-11 6"ϕ C.M. Pipe (18 Ga.) L.F.	
Superstr.		591.2	167,263	1,155		120	344			
⑤ Abut No. 1	42	13.5	2,137			312		50	11	
Bent No. 1	134	18.7	13,920			378				
Bent No. 2	140	18.7	13,920			399				
⑤ Abut No. 2	42	13.5	2,137			347		50	11	
Total Bridge	358	655.6	199,377	1,155		1,556	344	100	22	

Notes:
① Dry Excavation based on Lower Roadway Profile.
② The cost of 16 C.Y. Porous Backfill Material to be included in Item 710-10.
③ Wing Post quantities are included in Superstr. Quantities.
④ The cost of Polyethylene Sheeting and all miscellaneous items necessary for installation to be included in Item 710-10.
⑤ Pavement at Bridge Ends Quantities are included in Superstr. Quantities, includes 87.4 C.Y. Class "A" Concrete, 25,716 lb. Reinforcing Steel, 120 L.F. HP10x42 Piles and 232 S.Y. Linseed Oil Treatment.
⑥ The cost of 16 Threaded Steel Inserts and 16 7/8" ϕ x 4" Hex Head Bolts, (A307), to be included in bridge items bid on.

GENERAL NOTES

Specifications: Standard Road and Bridge Specifications of the Tennessee Department of Highways (1968 Edition).

Design Specifications: A.A.S.H.O. 1969 Edition with Addenda.

Loading: HS20-44.

Concrete: To be Class "A", Cast-in-Place, f'_c = 3,000 p.s.i. See Special Provision regarding Section 604-Concrete Structures.

Reinforcing Steel: To be A.S.T.M. A615, Grade 40, f_s = 20,000 p.s.i. Standard C.R.S.I. Hook Details apply unless otherwise noted on Bill of Steel. Bending dimensions shown are based on Grade 40. Spacing dimensions are center to center unless otherwise noted on detail drawings.

Piles: To be HP10x42 Steel Piles to be driven to refusal on rock or a minimum bearing of 30 tons for the Bents and 39 tons for the Abutments.

Finishing Concrete Surfaces: Concrete finishing shall be in accordance with Section 604.22 of the Tennessee Std. Specifications except as modified by the Special Provisions regarding Section 604-Concrete Structures. A Textured Coated Finish shall be used in lieu of a Class 2 Finish. The color of the finish shall be similar to Aztec Gold or Cypress Green and a color sample shall be submitted to the Br. Engineer for approval. The cost of Finishing Concrete Surfaces is to be included in the cost of Class "A" Concrete. In addition to the requirements of Section 604.22 of the Tenn. Std. Specifications and Special Provisions regarding Section 604-Concrete Structures, the entire visible Concrete Surfaces except the roadway surfaces and including the slope paving shall receive a Textured Coated Finish. The slope paving shall be Cypress Green and all other exposed surfaces shall be Aztec Gold.

Linseed Oil Protective Treatment: Surfaces receiving a Textured Coated Finish shall not receive a Linseed Oil Treatment. See Special Provisions regarding Section 604-Concrete Structures.

Bridgerail: Build Bridgerail according to Std. Dwg. No. K-38-154 A. Dimensions shown are measured along centerline of base plates. See dimensions on Elevation View on this sheet.

Bridge Deck Sealant: The Bridge Deck and reinforced approach slab shall be sealed in accordance with the Special Provision Regarding Coal Tar Interlayer Protective Coat. Bridge Deck Sealant will be included in a future paving contract. (1048 s.y. req'd.)

TRAFFIC DATA
Rossview Road A.D.T. 1971 - 850
A.D.T. 1991 - 2,100

44'-0" ROADWAY WITH PARAPETS
STATE OF TENNESSEE
DEPARTMENT OF HIGHWAYS
NASHVILLE

LAYOUT OF BRIDGE NO. 8
ROSSVIEW ROAD
OVER EAST BOUND I-24
STA. 419 + 92.18
MONTGOMERY COUNTY
1972

CORRECT: [signature] BRIDGE ENGINEER
APPROVED: [signature] STATE HIGHWAY ENGINEER

K-99-120

DESIGNED BY E.D.T. DATE 10/71
DRAWN BY N.S.G. DATE 10/71
TRACED BY J.D.M. DATE 11/71
CHECKED BY E.D.T. DATE 11/71

MICROFILMED

BRIGHTON ENGINEERING COMPANY

FED. ROAD DIST. NO.	STATE	FED. AID PROJ. NO.	FISCAL YEAR	SHEET NO.	TOTAL SHEETS
3	TENN.	EB I-24-2(13)4	1972	54	

REVISIONS

NO.	DATE	BY	BRIEF DESCRIPTION
1	11-10-72	WVB	Locate Optional Construction Joints.

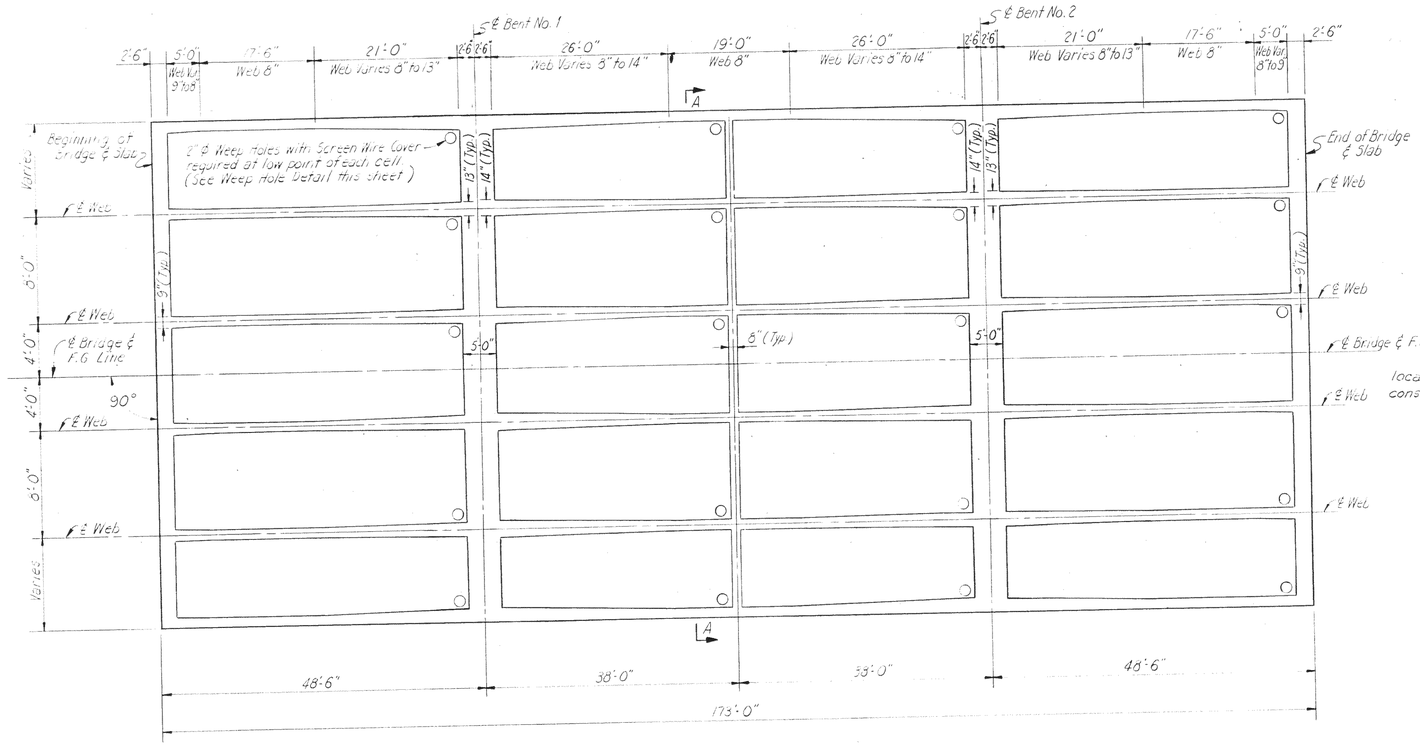

FRAMING PLAN

Note: For Section A-A see Dwg. K-99-123.

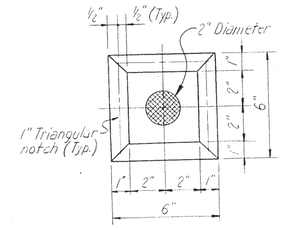

WEEP HOLE DETAIL

Showing 2ϕ Weep Hole with Screen Wire Cover. Typ. @ low point of each cell.

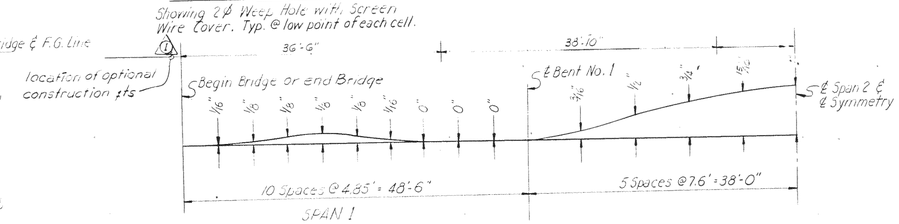

Note: This curve is for dead load camber only and should be increased by the amount of anticipated take up in the falsework.

DEAD LOAD CORRECTION CURVE

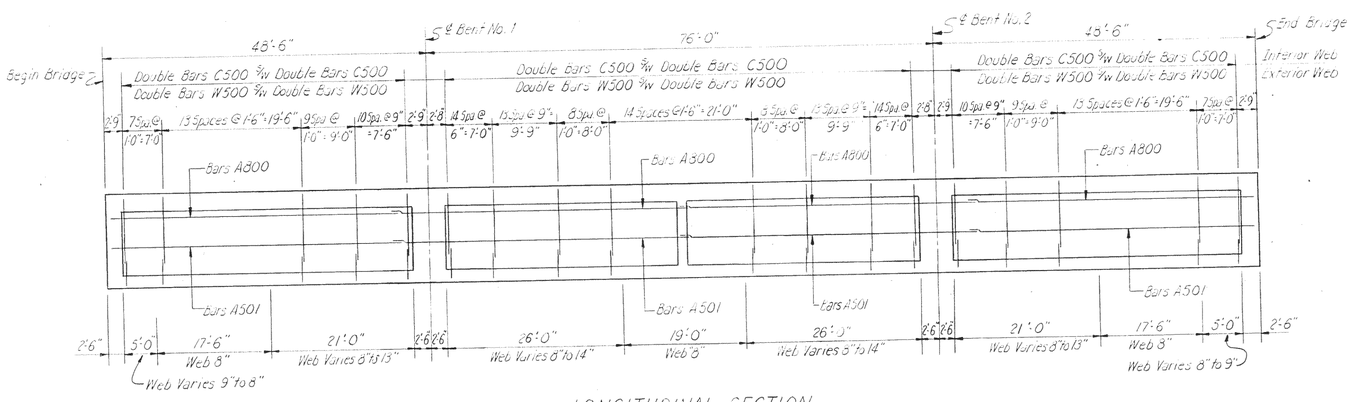

LONGITUDINAL SECTION

CONSTRUCTION SEQUENCE

Forms and supports for the entire bottom slab shall be in place prior to the placement of superstructure concrete. Concrete for the top and bottom slab and walls may be placed in any sequence, however Construction joints will be permitted at designated locations only. No top slab concrete may be placed until all walls have been completed. △1

ESTIMATED QUANTITIES

ITEM	CLASS "A" CONCRETE C.Y.	REINFORCING STEEL LB.
ROSSVIEW ROAD BRIDGE	591.2	167,263

* Note: Concrete Quantities include all concrete above Abutment and Bent Footings. Reinforcement is as shown in Bill of Steel.

STATE OF TENNESSEE
DEPARTMENT OF HIGHWAYS
NASHVILLE

SUPERSTRUCTURE DETAILS
ROSSVIEW ROAD OVER E.B. I-24
STA. 419 + 92.18
MONTGOMERY COUNTY
1972

CORRECT _____ BRIDGE ENGINEER

APPROVED _____ STATE HIGHWAY ENGINEER

K-99-121

BRIGHTON ENGINEERING COMPANY

		DATE
DESIGNED BY	E.D.T.	10/71
DRAWN BY	N.S.G.	10/71
TRACED BY	W.L.T.	11/71
CHECKED BY	E.D.T.	11/71

MICROFILMED

FED. ROAD DIST. NO.	STATE	FED. AID PROJ. NO.	FISCAL YEAR	SHEET NO.	TOTAL SHEETS
3	TENN.	EB I-24-2(13)4	1972	55	

REVISIONS

NO.	DATE	BY	BRIEF DISCRIPTION

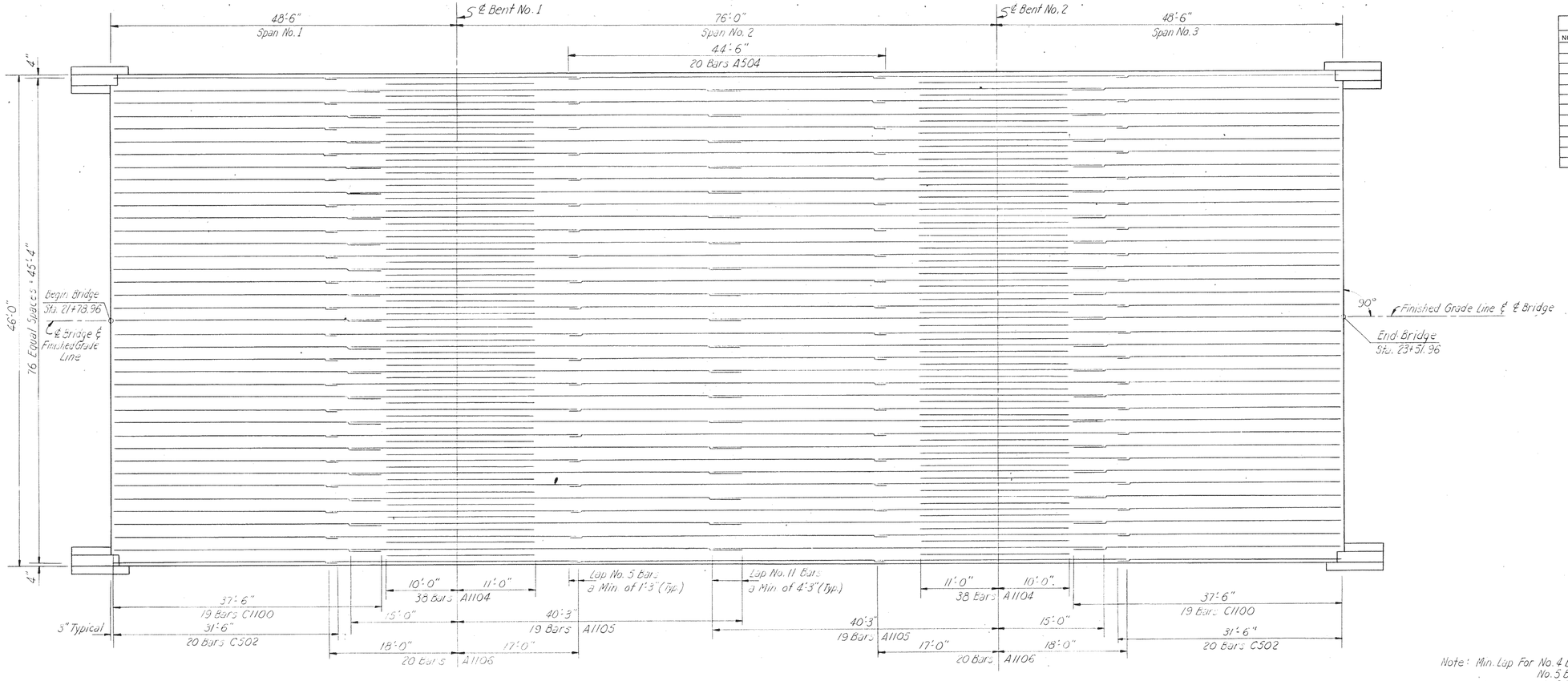

PLAN OF MAIN REINFORCING STEEL - TOP SLAB

Note: All bars shown are located in top of top slab.

Note: Min. Lap For No. 4 Bars = 1'-0"
No. 5 Bars = 1'-3"
No. 6 Bars = 1'-6"
No. 8 Bars = 3'-0"
No. 10 Bars = 3'-5"
No. 11 Bars = 4'-3"

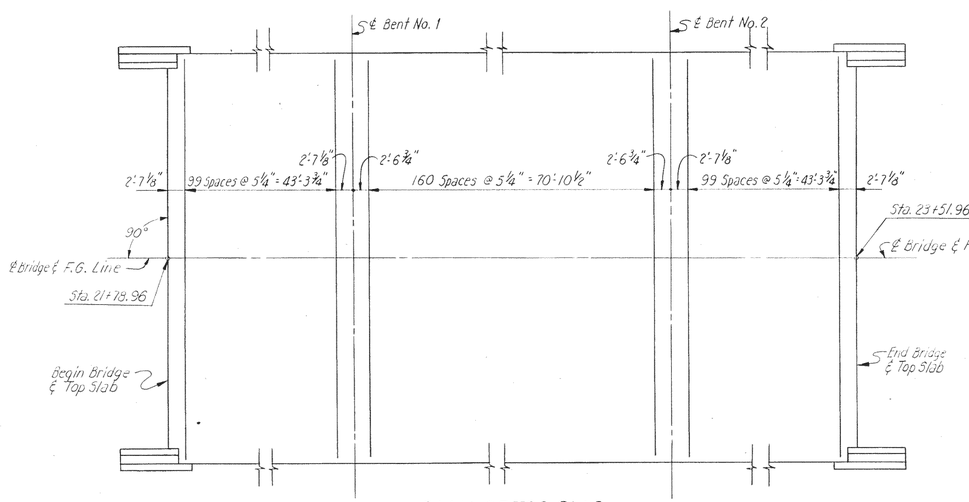

PLAN OF TOP SLAB

(Showing Spacing of Bars A500 - Top and Bottom of Slab)

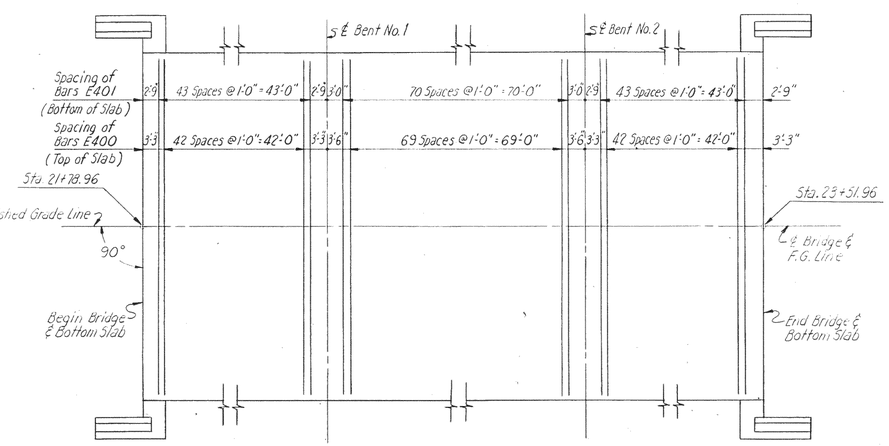

PLAN OF BOTTOM SLAB

(Showing Transverse Steel)

STATE OF TENNESSEE
DEPARTMENT OF HIGHWAYS
NASHVILLE

SUPERSTRUCTURE DETAILS

ROSSVIEW ROAD OVER E.B. I-24
STA. 419 + 92.18
MONTGOMERY COUNTY
1972

CORRECT _____ BRIDGE ENGINEER

APPROVED _____ STATE HIGHWAY ENGINEER

K-99-122

BRIGHTON ENGINEERING COMPANY

		DATE
DESIGNED BY	E.D.T.	10/71
DRAWN BY	N.S.G.	10/71
TRACED BY	W.L.T.	11/71
CHECKED BY	E.D.T.	11/71

MICROFILMED

FED. ROAD DIST. NO.	STATE	FED. AID PROJ. NO.	FISCAL YEAR	SHEET NO.	TOTAL SHEETS
3	TENN.	EBI-24-3(13)4	1972	56	

REVISIONS

NO.	DATE	BY	BRIEF DESCRIPTION
1	11-10-72	HMB	Locate Construction Joint.

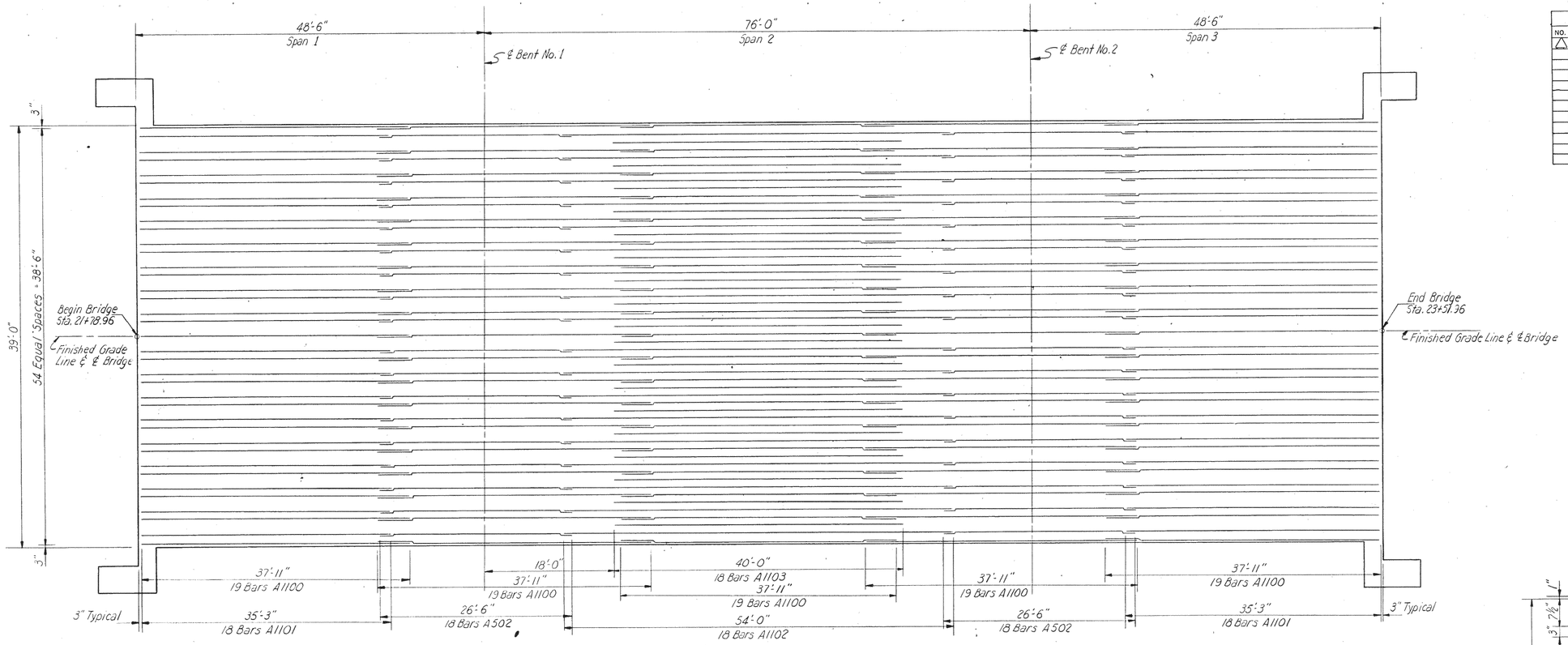

PLAN OF MAIN REINFORCING STEEL - BOTTOM SLAB

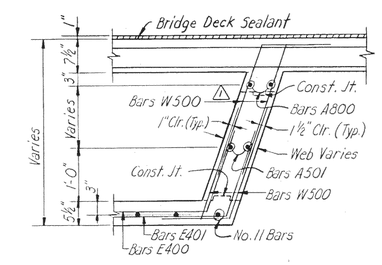

TYPICAL SECTION THRU EXTERIOR WEB

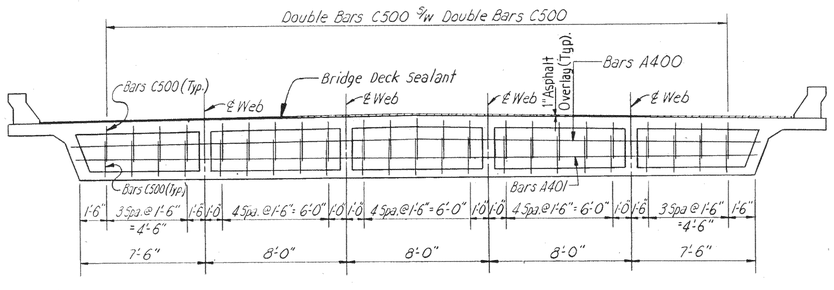

SECTION A-A

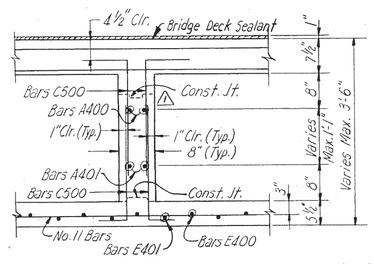

TYPICAL SECTION THRU DIAPHRAGM

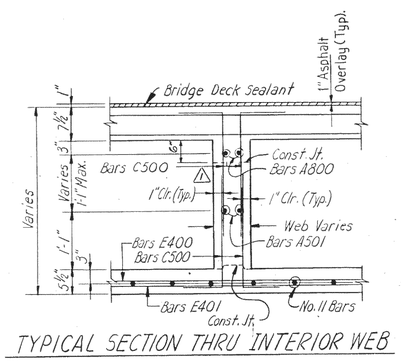

TYPICAL SECTION THRU INTERIOR WEB

STATE OF TENNESSEE
DEPARTMENT OF HIGHWAYS
NASHVILLE

SUPERSTRUCTURE DETAILS

ROSSVIEW ROAD OVER E.B. I-24
STA. 419 + 92.18
MONTGOMERY COUNTY
1972

CORRECT A. H. Deitrick
BRIDGE ENGINEER
APPROVED Lewis Evans
STATE HIGHWAY ENGINEER

K-99-1,23

BRIGHTON ENGINEERING COMPANY

		DATE
DESIGNED BY	E.D.T.	10/71
DRAWN BY	N.S.G.	10/71
TRACED BY	W.L.T.	11/71
CHECKED BY	E.D.T.	11/71

MICROFILMED

FED. ROAD DIST. NO.	STATE	FED. AID PROJ. NO.	FISCAL YEAR	SHEET NO.	TOTAL SHEETS
3	TENN.	EB I-24-2(13)4	1972	57	

REVISIONS

NO.	DATE	BY	BRIEF DESCRIPTION
1	11-10-72	H.V.B.	Locate Construction Joints.
2	12-11-72	C.W.T.	Rev. Fin. Grade Pt.

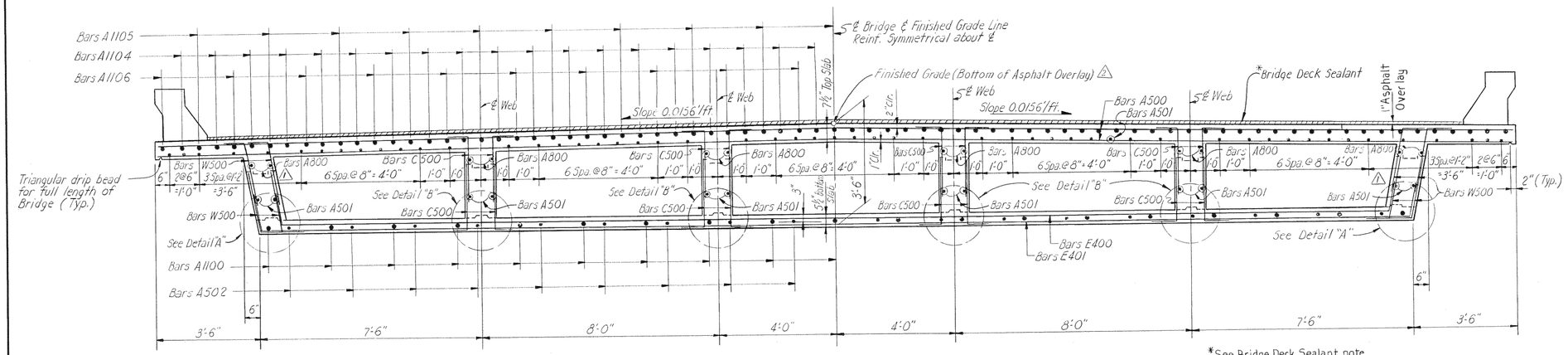

SECTION NEAR BENTS

*See Bridge Deck Sealant note on Dwg. no. K-99-120

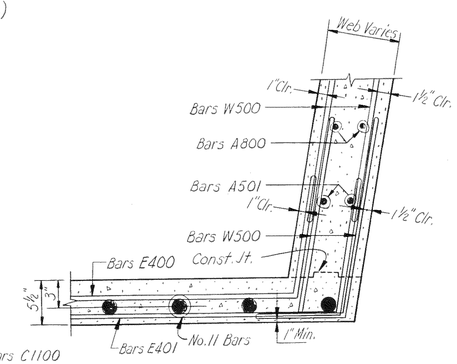

DETAIL "A"

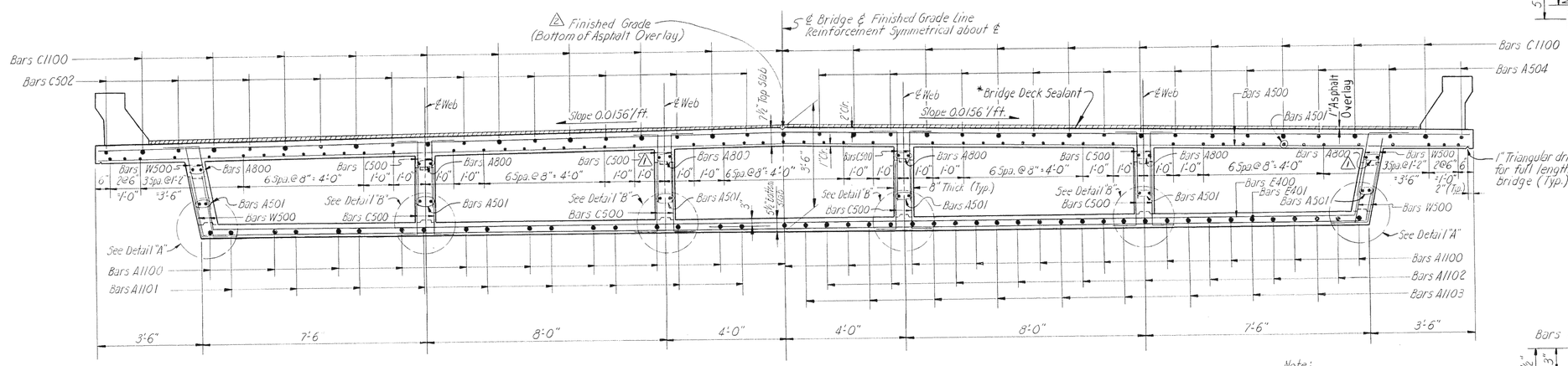

HALF SECTION NEAR ℄ SPANS 1 & 3

HALF SECTION NEAR ℄ SPAN 2

Note:
2" ϕ Weep holes with screen wire cover required at low point of each cell. When pouring slab, provisions shall be made for setting reinforcing steel for Parapet. The parapet shall not be poured until the slab is poured and cured. When pouring parapet, provisions shall be made for setting anchor bolts for parapet rail.

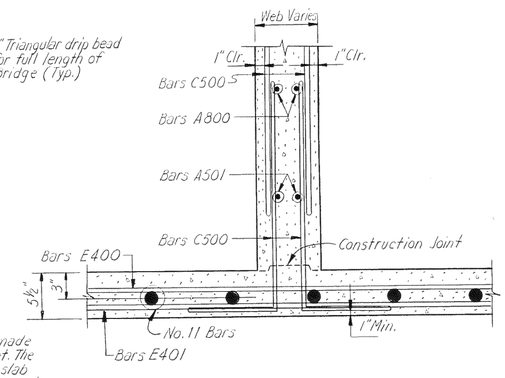

DETAIL "B"

		DATE
DESIGNED BY	E.D.T.	10/71
DRAWN BY	N.S.G.	10/71
TRACED BY	W.L.T.	11/71
CHECKED BY	E.D.T.	11/71

STATE OF TENNESSEE
DEPARTMENT OF HIGHWAYS
NASHVILLE

SUPERSTRUCTURE DETAILS
ROSSVIEW ROAD OVER E.B. I-24
STA. 419 + 92.18
MONTGOMERY COUNTY
1972

CORRECT H.W. Derthick
BRIDGE ENGINEER

APPROVED Lewis Evans
STATE HIGHWAY ENGINEER

K-99-124

BRIGHTON ENGINEERING COMPANY

MICROFILMED

DRAFTING MEDIA GRAPHIC CONTROLS CORPORATION Buffalo, New York Printed in U.S.A. ASTROFILM® N685.4

FED. ROAD DIST. NO.	STATE	FED. AID PROJ. NO.	FISCAL YEAR	SHEET NO.	TOTAL SHEETS
3	TENN.	EBI-24-5(13)4	1972	58	

REVISIONS

NO.	DATE	BY	BRIEF DESCRIPTION
1	11-10-72	HMB	Bars A563 To X560

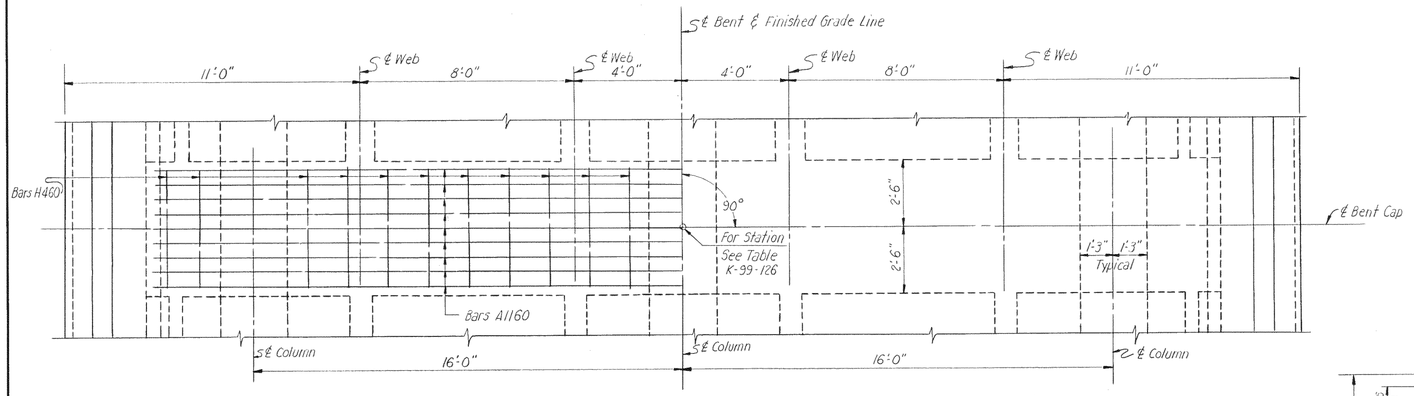

Note: Reinforcement for Bent is Symmetrical about ℄ Bent.

PLAN

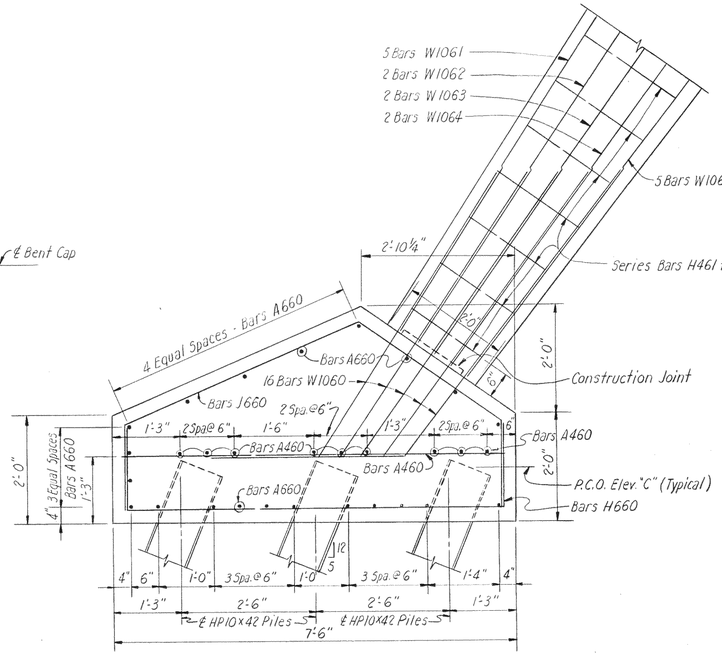

TYPICAL FOOTING DETAIL

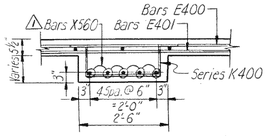

SECTION C-C

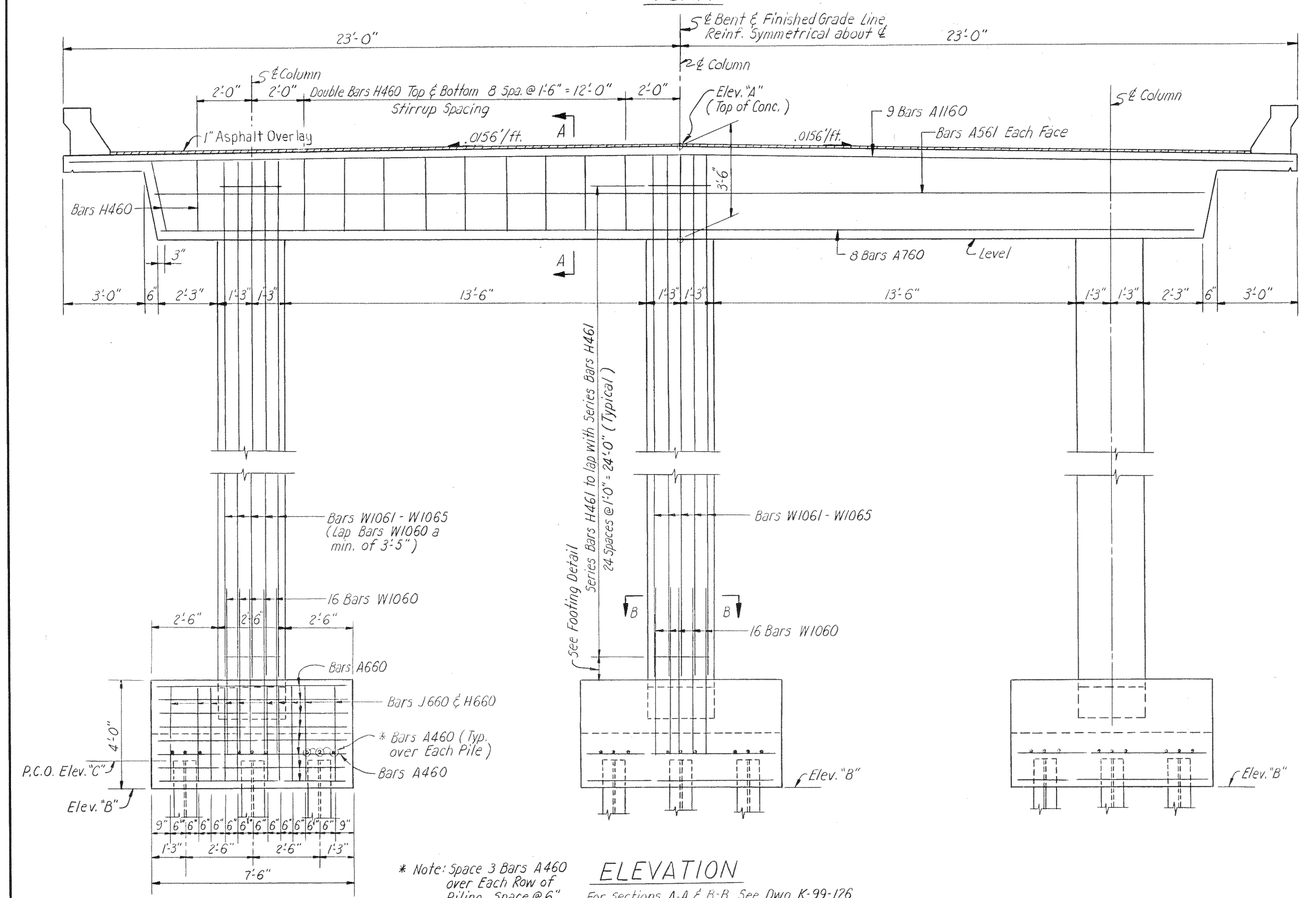

* Note: Space 3 Bars A460 over Each Row of Piling. Space @ 6"

ELEVATION

For Sections A-A & B-B, See Dwg. K-99-126

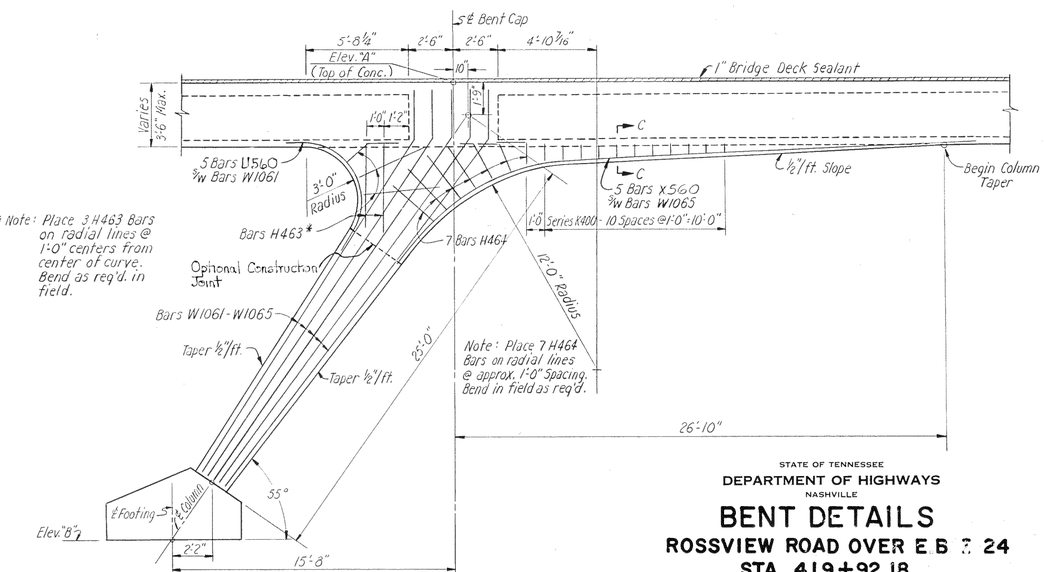

* Note: Place 3 H463 Bars on radial lines @ 1'-0" centers from center of curve. Bend as req'd. in field.

END ELEVATION

Note: Piling not shown.

STATE OF TENNESSEE
DEPARTMENT OF HIGHWAYS
NASHVILLE

BENT DETAILS

ROSSVIEW ROAD OVER E B I 24
STA 419+92.18
MONTGOMERY COUNTY
1972

CORRECT H. W. Dietrich — BRIDGE ENGINEER
APPROVED Lewis Evans — STATE HIGHWAY ENGINEER

K-99-125

BRIGHTON ENGINEERING COMPANY

		DATE
DESIGNED BY	E.D.T.	10/71
DRAWN BY	N.S.G.	DATE 10/71
TRACED BY	W.L.T.	DATE 11/71
CHECKED BY	E.D.T.	DATE 11/71

MICROFILMED

DRAFTING MEDIA GRAPHIC CONTROLS CORPORATION Buffalo, New York Printed in U.S.A. ASTROFILM® N655.4

FED. ROAD DIST. NO.	STATE	FED. AID PROJ. NO.	FISCAL YEAR	SHEET NO.	TOTAL SHEETS
3	TENN.	EB I-24-0(13)4	1972	59	

REVISIONS

NO.	DATE	BY	BRIEF DESCRIPTION
1	11-10-72	HMB.	Locate Construction Joint.
2	12-14-72	C.W.T.	Rev. table of Elevations

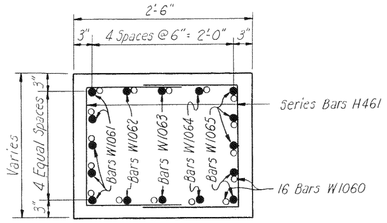

SECTION B-B

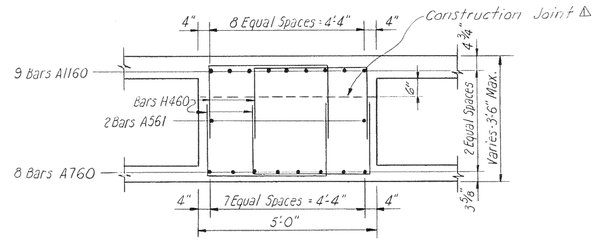

SECTION A-A

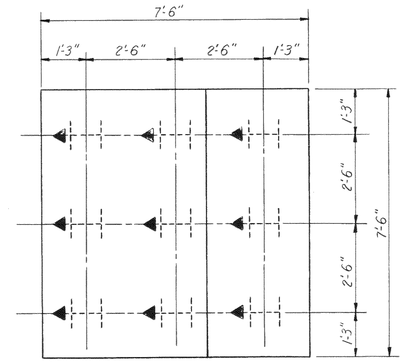

PILING LAYOUT

TABLE OF STATIONS & ELEVATIONS 2

ITEM	STATION	ELEVATION		
		"A"	"B"	"C"
BENT NO. 1	22 + 27.46	603.63	578.32	579.32
BENT NO. 2	23+03.46	603.56	578.25	579.25

ESTIMATED QUANTITIES *

ITEM	CLASS "A" CONCRETE C.Y.	REINFORCING STEEL LB.
BENT NO. 1	18.7	13,920
BENT NO. 2	18.7	13,920

* Note: Concrete quantity includes only the footings; All concrete above Footings to be included in Superstructure. Reinforcement quantity is as shown in Bill of Steel.

DESIGNED BY E.D.T. DATE 10/71
DRAWN BY N.S.G. DATE 10/71
TRACED BY W.L.T. DATE 11/71
CHECKED BY E.D.T. DATE 11/71

STATE OF TENNESSEE
DEPARTMENT OF HIGHWAYS
NASHVILLE

BENT DETAILS

ROSSVIEW ROAD OVER E.B. I-24
STA. 419 + 92.18
MONTGOMERY COUNTY
1972

CORRECT H. W. Dethick
BRIDGE ENGINEER

APPROVED Lewis Evans
STATE HIGHWAY ENGINEER

K-99-126

BRIGHTON ENGINEERING COMPANY

MICROFILMED

CHARTING MEDIA GRAPHIC CONTROLS CORPORATION Buffalo, New York Printed in U.S.A. ASTROFILM® N685.4

FED. ROAD DIST. NO.	STATE	FED. AID PROJ. NO.	FISCAL YEAR	SHEET NO.	TOTAL SHEETS
3	TENN.	SB I-24-9(13)4	1972	60	

REVISIONS

NO.	DATE	BY	BRIEF DESCRIPTION
1	12-14-72	C.W.T.	Rev. Fin. Grade & Table of Elevations

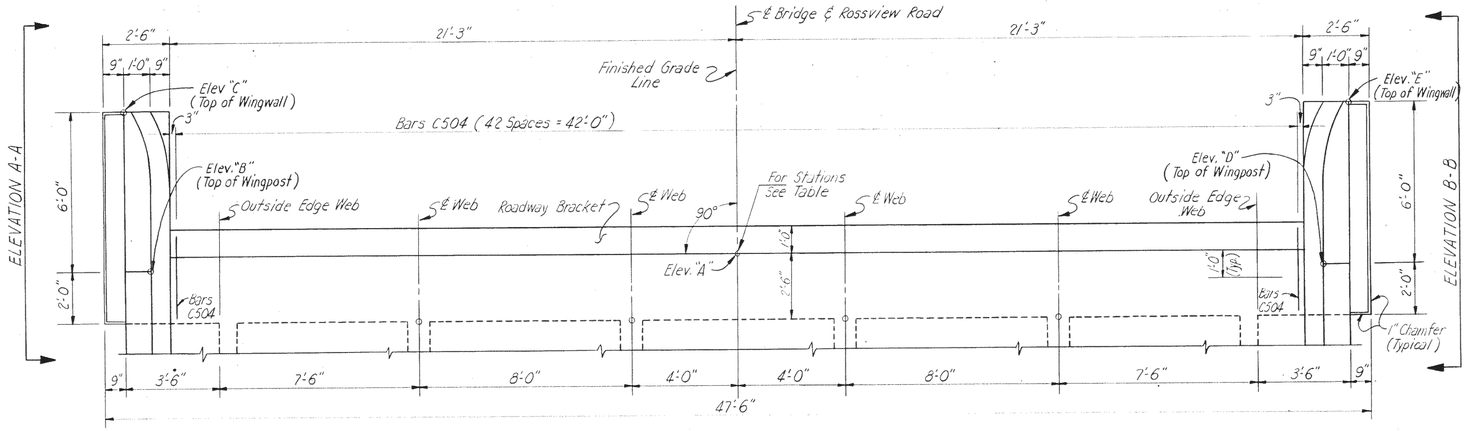

PLAN

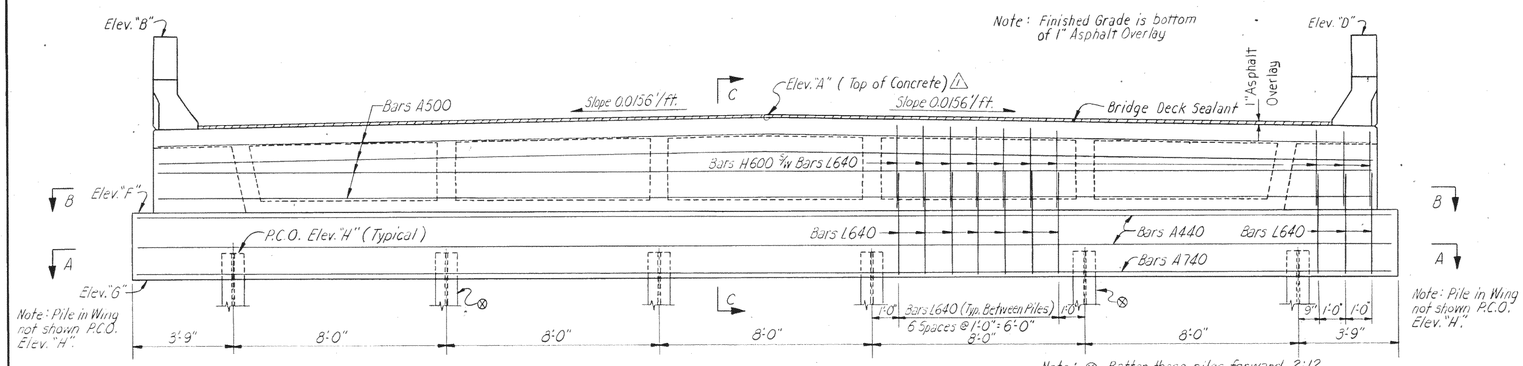

ELEVATION

ABUTMENT NO. 1 - LOOKING BACK ON ℄ SURVEY
ABUTMENT NO. 2 - LOOKING FORWARD ON ℄ SURVEY

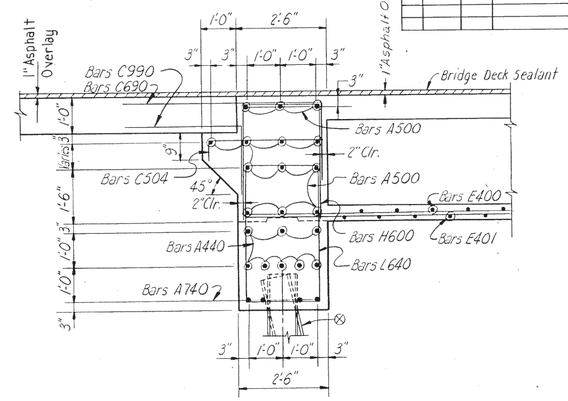

SECTION C-C

TABLE OF STATIONS AND ELEVATIONS ⚠

ITEM	STATION	ELEVATIONS A	B	C	D	E	F	G	H
ABUTMENT NO. 1	21+78.96	603.68	606.75	603.34	606.75	603.34	600.18	597.68	598.68
ABUTMENT NO. 2	23+51.96	603.59	606.58	603.16	606.58	603.16	600.01	597.51	598.51

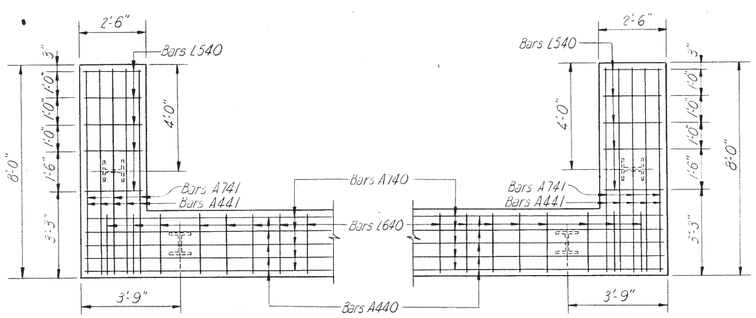

SECTION A-A

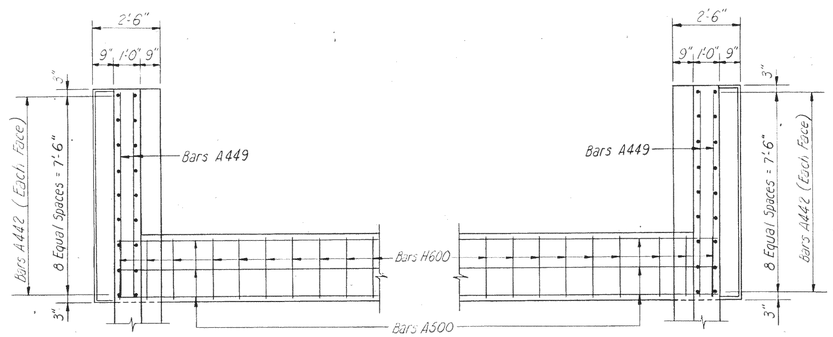

SECTION B-B

		DATE
DESIGNED BY	E.D.T.	10/71
DRAWN BY	N.S.G.	10/71
TRACED BY	W.L.T.	11/71
CHECKED BY	E.D.T.	11/71

STATE OF TENNESSEE
DEPARTMENT OF HIGHWAYS
NASHVILLE

ABUTMENT DETAILS

ROSSVIEW ROAD OVER E.B. I-24
STA. 419+92.18
MONTGOMERY COUNTY
1972

CORRECT H. W. Reynolds
BRIDGE ENGINEER

APPROVED Lewis Evans
STATE HIGHWAY ENGINEER

K-99-127

BRIGHTON ENGINEERING COMPANY

FED. ROAD DIST. NO.	STATE	FED. AID PROJ. NO.	FISCAL YEAR	SHEET NO.	TOTAL SHEETS
3	TENN.	EB I-24-9(13) 4	1972	61	

REVISIONS

NO.	DATE	BY	BRIEF DESCRIPTION

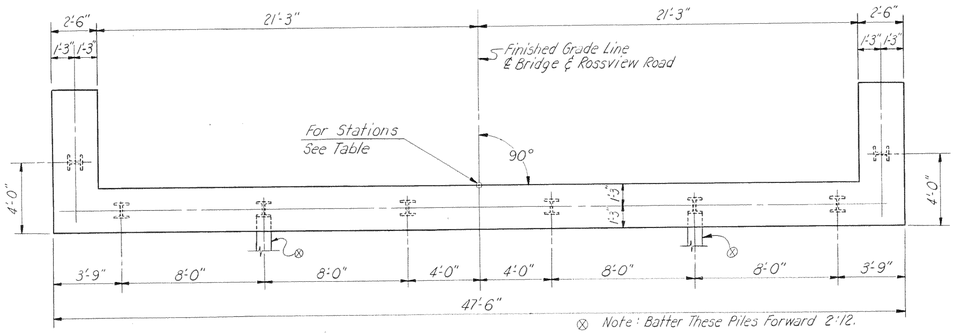

PILE LAYOUT PLAN

Abut. No. 1 - Looking back on ℄ Survey
Abut. No. 2 - Looking forward on ℄ Survey

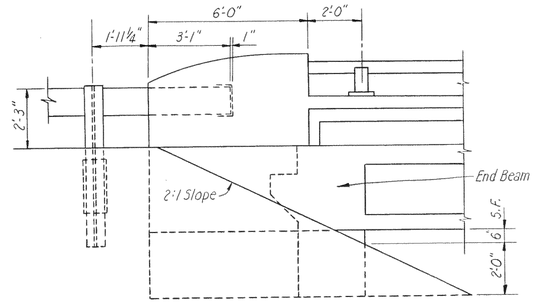

SKETCH SHOWING BRIDGERAIL WINGPOST AND GUARDRAIL TREATMENT AT END OF BRIDGE

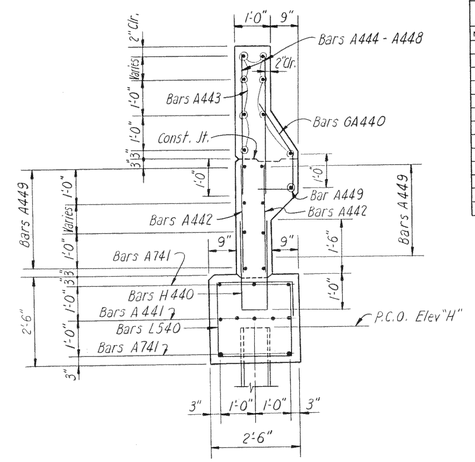

SECTION D-D

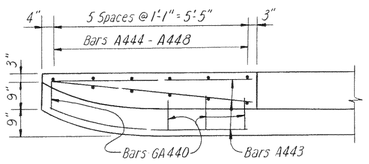

SECTION E-E

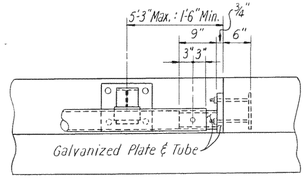

Note:
Tubing and base plate material shall be of weldable carbon steel with a minimum yield point of 36 ksi galvanized according to ASTM A123 Specifications after fabrication.

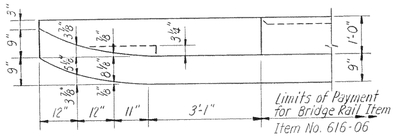

PLAN

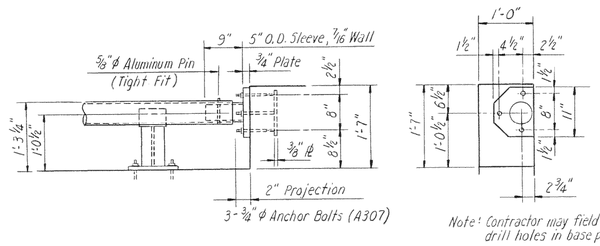

RAILING DETAILS

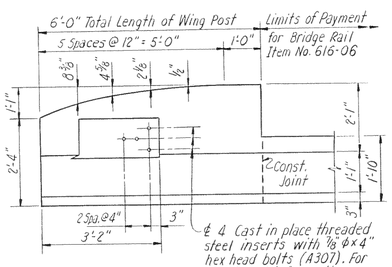

ELEVATION

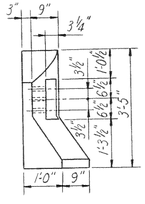

END ELEVATION

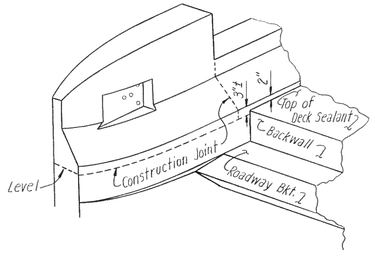

ISOMETRIC OF WING POST

WING POST DETAILS

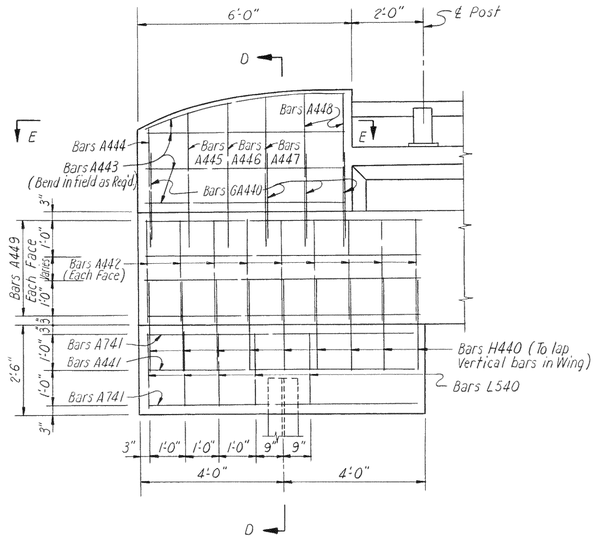

ELEVATION A-A

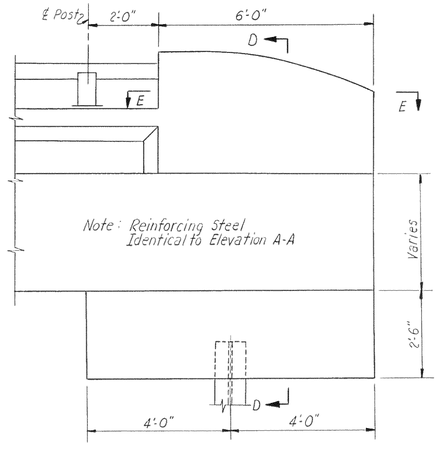

ELEVATION B-B

ESTIMATED QUANTITIES *

ITEM	CLASS "A" CONCRETE CU. YDS.	REINFORCING STEEL LBS.
ABUTMENT NO. 1	13.5	2,137
ABUTMENT NO. 2	13.5	2,137

* Concrete Quantities include only the footings; all concrete above footings is included in Superstructure. Reinforcement Quantities are shown in Bill of Steel.

STATE OF TENNESSEE
DEPARTMENT OF HIGHWAYS
NASHVILLE

ABUTMENT DETAILS

ROSSVIEW ROAD OVER E.B. I-24
STA. 419 + 92.18
MONTGOMERY COUNTY
1972

CORRECT H. H. Dry Jr. — BRIDGE ENGINEER
APPROVED Lewis Evans — STATE HIGHWAY ENGINEER

K-99-128

BRIGHTON ENGINEERING COMPANY

DESIGNED BY	E.D.T.	DATE	10/71
DRAWN BY	N.S.G.	DATE	10/71
TRACED BY	W.L.T.	DATE	11/71
CHECKED BY	E.D.T.	DATE	11/71

MICROFILMED

DRAFTING MEDIA GRAPHIC CONTROLS CORPORATION Buffalo, New York Printed in U.S.A. ASTROFILM® N685.4

BILL OF STEEL

FED. ROAD DIST. NO.	STATE	FED. AID PROJ. NO.	FISCAL YEAR	SHEET NO.	TOTAL SHEETS
3	TENN.	EBI-24-3(13)4	1972	62	

REVISIONS

NO.	DATE	BY	BRIEF DESCRIPTION

SUPERSTRUCTURE

BAR	LOCATION	SIZE	NO. REQ'D	BENDING DIMENSIONS a	b	c	d	LENGTH
A400	Diaphragm	4	2					39'-4"
A401	Diaphragm	4	2					39'-1"
A500	Top Slab and End Beam	5	748					45'-8"
A501	Top Slab and Web	5	260					44'-2"
A502	Bottom Slab	5	36					26'-6"
A503	None							
A504	Top Slab	5	20					44'-6"
A800	Web	8	48					45'-5"
A1100	Bottom Slab	11	95					37'-11"
A1101	Bottom Slab	11	36					35'-3"
A1102	Bottom Slab	11	18					54'-0"
A1103	Bottom Slab	11	18					40'-0"
A1104	Top Slab	11	76					21'-0"
A1105	Top Slab	11	38					55'-3"
A1106	Top Slab	11	40					35'-0"
C500	Web and Diaphragm	5	2732	2'-3"				3'-1"
C502	Top Slab	5	40	31'-6"				32'-4"
C504	End Beam	5	86	3'-2"				3'-8"
C1100	Top Slab	11	38	37'-6"				39'-6"
E400	Bottom Slab	4	156	38'-0"	1'-0"	11¾"	2¼"	40'-0"
E401	Bottom Slab	4	159	38'-9"	1'-2"	1'-1¾"	2¼"	41'-1"
H600	End Beam	6	82	2'-2"	3'-1"			8'-4"
W500	Web	5	1320	2'-2"	10"	10"	2"	3'-0"

ABUTMENTS

BAR	LOCATION	SIZE	NO. REQ'D	BENDING DIMENSIONS a	b	c	d	LENGTH
A440	Cap Beam	4	16					47'-2"
A441	Wing Wall Footing	4	20					7'-8"
A442	Wing Wall	4	72					3'-0"
A443	Wing Post	4	32					5'-6"
A444	Wing Post	4	4					3'-4"
A445	Wing Post	4	8					3'-9"
A446	Wing Post	4	8					4'-0"
A447	Wing Post	4	8					4'-2"
A448	Wing Post	4	16					4'-3"
A449	Wing Wall	4	36					7'-8"
A740	Cap Beam	7	8					47'-2"
A741	Wing Wall Footing	7	20					7'-8"
6A440	Wing Post	4	16	11"	12"	1'-5"		3'-7"
H440	Wing Wall Footing	4	36	8"	2'-6"			5'-8"
L540	Wing Wall Footing	5	20	2'-2"	1'-0"	2'-2"		9'-8"
L640	Cap Beam	6	82	2'-2½"	1'-0"	3'-11½"		13'-4"
A490	Approach Slab	4	100					42'-2"
A690	Approach Slab	6	86					24'-2"
A790	Approach Slab	7	16					42'-2"
A990	Approach Slab	9	170					24'-2"
A1190	Approach Slab	11	8					6'-0"
C690	Approach Slab	6	82	4'-4"				5'-4"
C990	Approach Slab	9	164	5'-4"				6'-4"
L590	Approach Slab	5	140	1'-2"	1'-0"	2'-2"		7'-8"

BENTS

BAR	LOCATION	SIZE	NO. REQ'D	BENDING DIMENSIONS a	b	c	d	LENGTH
A460	Footing	4	108					7'-0"
A561	Cap	5	4					39'-2"
A660	Footing	6	126					7'-0"
A760	Cap	7	16					38'-8"
A1160	Cap	11	18					45'-8"
H460	Cap	4	176	3'-5½"	1'-9"			7'-0"
H461	Column	4	12	"a"=2'-2½", "b" varies from				151'-0"
	Series of 25 Bars Each	1'-5" to 2'-5" in equal increments						
H463	Column	4	30	2'-2½"	1'-6"			5'-3"
H464	Column	4	42	2'-2½"	3'-0"			8'-3"
H660	Footing	6	60	7'-0"	1'-7"			10'-2"
J660	Footing	6	60	1'-6"	4'-9"	3'-3"	3'-4½"	11'-0"
K400	Column & Superstructure	4	6	"a"=8" "b"=2'-2½" "c" varies				57'-3"
	Series of 11 Bars Each	from 7½" to 1'-0½" in equal increments						
W1060	Footing & Column	10	96	7'-9"	1'-10"	1'-6½"	1'-0"	9'-7"
W1061	Column	10	30	21'-3"	2'-8"	1'-5½"	2'-1½"	23'-11"
W1062	Column	10	12	21'-9"	2'-8"	1'-6"	2'-1½"	24'-5"
W1063	Column	10	12	22'-4"	2'-8"	1'-6½"	2'-1½"	25'-0"
W1064	Column	10	12	23'-0"	2'-8"	1'-7"	2'-1½"	25'-8"
W1065	Column	10	30	23'-8"	2'-8"	1'-7½"	2'-1½"	26'-4"
U560	COLUMN & CAP	5	30					9'-7"
X560	COLUMN & CAP	5	30					34'-7"

BAR	LOCATION	SIZE	NO. REQ'D	BENDING DIMENSIONS a	b	c	d	LENGTH

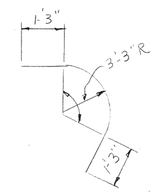

BARS U560

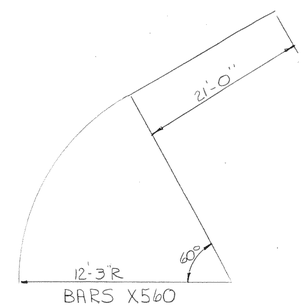

BARS X560

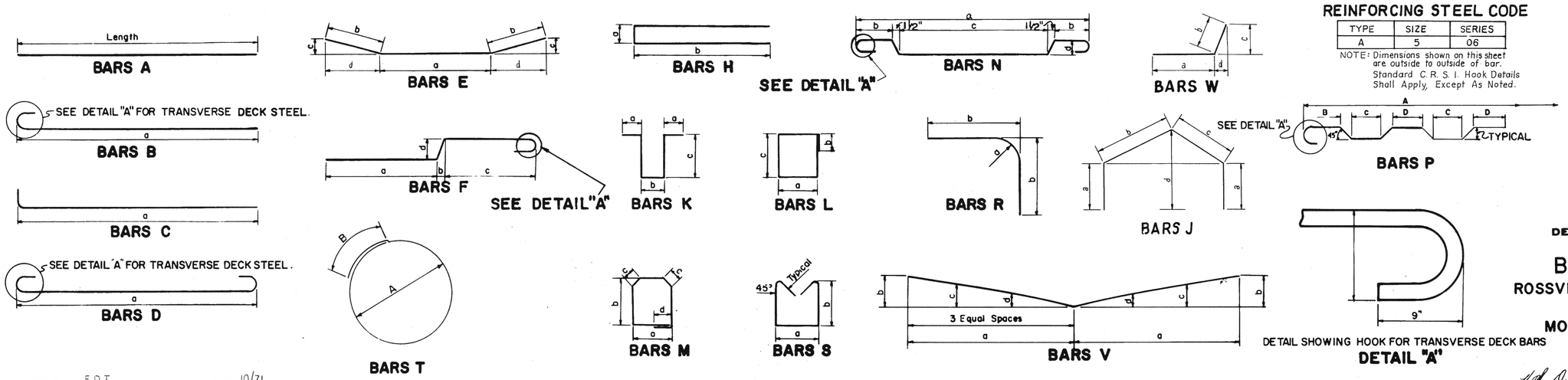

REINFORCING STEEL CODE

TYPE	SIZE	SERIES
A	5	06

NOTE: Dimensions shown on this sheet are outside to outside of bar. Standard C.R.S.I. Hook Details Shall Apply, Except As Noted.

STATE OF TENNESSEE
DEPARTMENT OF HIGHWAYS
NASHVILLE

BILL OF STEEL

ROSSVIEW ROAD OVER E.B. I-24
STA. 419 + 92.18
MONTGOMERY COUNTY
1972

DESIGNED BY	E.D.T.	DATE	10/71
DRAWN BY	N.S.G.	DATE	10/71
TRACED BY	J.D.M.	DATE	11/71
CHECKED BY	E.D.T.	DATE	11/71

CORRECT H. H. Deitrick — BRIDGE ENGINEER
APPROVED Lewis Evans — STATE HIGHWAY ENGINEER

K-99-129

BRIGHTON ENGINEERING COMPANY

MICROFILMED

FED. ROAD DIST. NO.	STATE	FED. AID PROJ. NO.	FISCAL YEAR	SHEET NO.	TOTAL SHEETS
3	TENN.		19		

REVISIONS

NO.	DATE	BY	BRIEF DESCRIPTION
1	3/10/69	BRB	Face of Parapet
2	1-5-69	BRB	Rail Material
3	11-9-70	BRB	REVISED PARAPET JOINT DETAILS.
4	2-25-71	BRB	Revised parapet steel & steel quantities & NOTE
5	12-21-71	BRB	Parapet Height & general details
6	4/26/76	HMB	AASHTO Specs. for aluminum welding
7	6-1-76	HMB	Welding Conformance Note

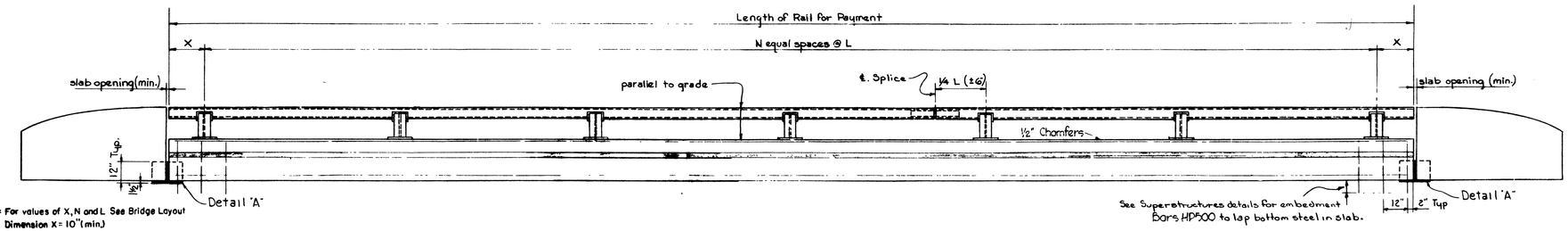

NOTE: For values of X, N and L See Bridge Layout
Dimension X = 10" (min.)
1'-9" (max.)
Dimension L = 10'-6" (max.)

3 ELEVATION of PARAPET & RAIL

TYPICAL EXTERIOR VIEW OF CONTINUOUS BRIDGE

FOR STRUCTURES WITH DECK JOINTS, THE PARAPET OPENING SHALL EQUAL THE DECK OPENING. (SEE DETAIL "B" BELOW). FOR DETAILS OF WINGPOST, SEE BRIDGE DRAWINGS.

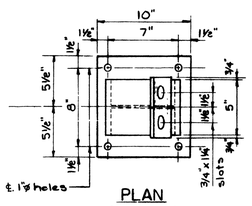

PLAN
Showing details with Rail Removed

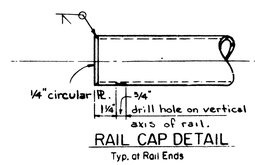

RAIL CAP DETAIL
Typ. at Rail Ends

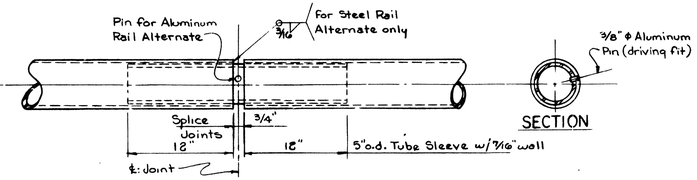

EXPANSION & SPLICE JOINTS
Rail Expansion Joints to be used at Armored Joints in Bridge Deck with tube opening equal to slab opening.

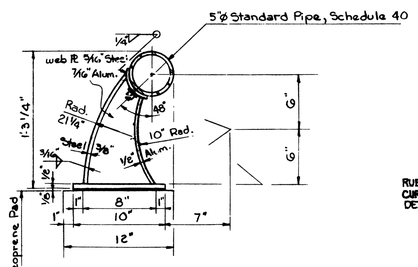

RAIL POST DETAILS
Cast aluminum posts conforming to the dimensions shown above for fabricated aluminum may be considered subject to the approval of the Engineer.

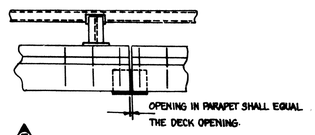

3 DETAIL "B"

TYPICAL FOR NON-CONTINUOUS BRIDGES

RUBBER OR P.V.C. WATERSTOP REQUIRED FOR BRIDGES WITH NO CURBS. (SET 1½ INTO SLAB). FOR DETAILS OF WATERSTOP, SEE DETAIL "A" BELOW.

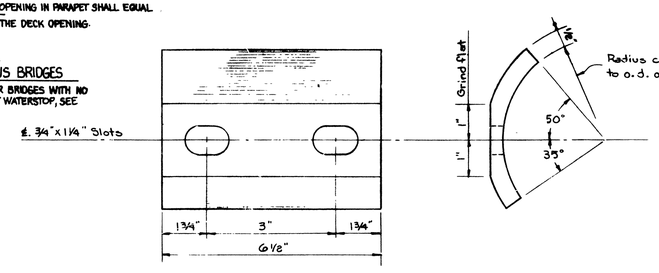

BENT PLATE DETAIL
Typical at each Post

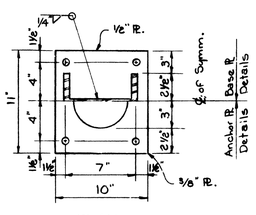

PLAN
Showing Base R. and Anchor R.

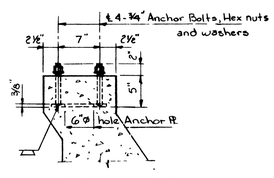

ANCHORAGE DETAILS
Showing Part Section of Parapet

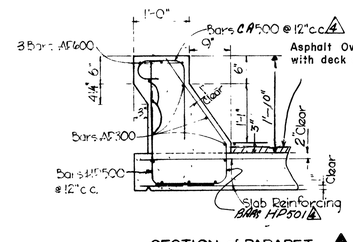

SECTION of PARAPET

Detail as shown for deck-mounted parapet. See Superstructure drawings for other slab details.

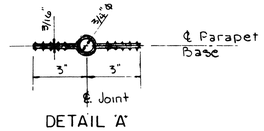

DETAIL "A"
For parapet openings where bitum. fiber expansion joint in deck is used.

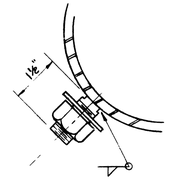

FASTENER DETAIL

Each Post Connection requires 2-5/8" ϕ reduced weld-base studs with hex nuts and washers.

Note: Alternate Details may be submitted to the Bridge Engineer for approval. Fasteners conforming to ASTM B211 shall have an anodic coating of .0002 inch minimum thickness, with dichromate or boiling water seal.

GENERAL NOTES

DESIGN: AASHO. 1969 Specifications with addenda 5

MATERIALS: Tubing and Rail Posts may be either Aluminum or Steel.

For Aluminum Alternate –

Rail & Splice Sleeve to be Alloy 6061-T6, ASTM B429

Fabricated Posts & Rail End Caps - Alloy 6061-T6, ASTM B209 - Cast Aluminum Posts - Alloy A344-T4

Rail Fasteners - Alloy 2024-T4 for Bolts and Alloy 6262-T9 for Hex Nuts, ASTM B211.

For Steel Alternate -

Railing Member - ASTM A53 Grade B Steel Pipe.

Splice Sleeve - ASTM A500-65, Grade B Carbon Steel Tubing, or A53, Grade B Steel Pipe.

Fabricated Posts & End Caps - ASTM-A36

Rail Fasteners - ASTM-A307

Miscellaneous Rail Items - Waterstops - See 1968 Tenn. Hwy. Dept. Specifications

Anchor plates - ASTM-A36, Anchor Bolts - A307, Neoprene Pads - See 1968 Tenn. Hwy. Dept. Specifications.

For Parapet Wall - Concrete to be Class "A" and Reinforcing Steel ASTM-A615

RAIL ITEM:

Basis of payment to be per linear foot. The item includes all components of the rail, its anchorage, and the reinforced concrete parapet. Payment will be made under item 616.06 .

FABRICATION & ERECTION:

1. The railing member shall be continuous from end to end of structure with each rail segment attached to a minimum of three posts, unless otherwise shown on bridge drawings 5
2. Alignment and Profile of rail shall conform to plans details. For horizontal curves of Radius less than 2000 feet, the rail shall be fabricated to the required shape. Rails shall be parallel to and Posts normal to Roadway Grade unless otherwise noted on plans.
3. PARAPETS ON CONTINUOUS STRUCTURES SHALL HAVE NO JOINTS EXCEPT AS OTHERWISE SHOWN AT ABUTMENT ENDS ON BRIDGE DRAWINGS SEE ALSO DETAIL "B".
4. No Concrete for the parapet shall be cast on any structure until the falsework has been struck.
5. All metal materials not specified to be Aluminum Alloy shall be galvanized to the applicable ASTM Requirements. See note 7 below.
6. All welding shall conform to the requirements of either the "Special Provision for Welded Structures" for Steel Rail Alternate or "AASHTO Standard Specifications for Structural Supports for Highway Signs, Luminaires, and Traffic Signals" for Aluminum Rail Alternate. After welding, all exposed joints shall be finished by grinding or filling to give a neat appearance.
7. If the steel rail alternate is selected, all components may be either hot-dip galvanized or painted.

For Painted-Steel Alternate:

(A) All surfaces to be painted shall be Blast Cleaned in accordance with "Steel Structures Painting Council Specifications" SSPC-SP6-52T (Commercial Blast Cleaning).

(B) 1st Shop Coat: Zinc Chromate-Iron Oxide Ready Mixed Paint AASHO. Specs. M-142-49. Thickness of coating 1¼ to 1¾ mills. Drying time 16 to 32 hrs. Inside of pipe railing is to be completely painted with first shop coat only. Thickness may exceed 1¾ mills.

2ND Shop Coat: Zinc Chromate-Iron Oxide with enough Black added to provide contrast.

3RD Shop Coat: Aluminum (Prussian Blue added) Tennessee Highway Department Specifications.

Field Painting: After erection is completed, the Contractor shall repair skinned or otherwise damaged paint to the satisfaction of the Engineer before applying final field coat of Aluminum (Tenn. Highway Dept. Specs.) Paint shall be applied as set out in A.A.S.H.O. Specs. Article 2.14.6 unless otherwise noted on this drawing or Shop Plans approved by the Engineer.

For Galvanized Steel Alternate:

(A) Railing members and fabricated posts shall be galvanized to A.S.T.M. requirements A123 and anchor bolts, nuts and washers A153. Anchor plate need not be galvanized.

(B) All fabrication shall be complete and ready for assembly before galvanizing except that nuts for rail fasteners and anchor bolts are to be tapped afterwards.

(C) Galvanized members shall be free from dross, flux and rough-coating caused by low vat temperatures.

SPECIAL NOTE: Since the finished railing must meet all requirements of fit, alignment and grade, to the full satisfaction of the Engr. it is suggested that complete field measurements be made before any shop fabrication is performed.

NOTE: ANCHOR BOLTS SHALL BE LOCATED IN THE FIELD BASED ON DIMENSIONS TAKEN FROM SHOP DRAWINGS.

UNIT QUANTITIES FOR ESTIMATING PARAPET ITEMS 5

Class "A" Conc. cu. yds./lin. ft.	Reinf. Steel lbs./lin. ft.
.081	16.9 4

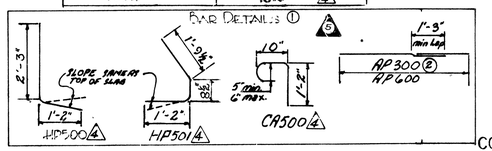

① Bar dimensions are outside to outside. First digit of number indicates size.

② These Bars shall be full length of parapet except that no bar will pass through open joints.

STATE OF TENNESSEE
DEPARTMENT OF TRANSPORTATION
NASHVILLE

BRIDGE RAILING
CONCRETE PARAPET with STRUCTURAL TUBING
1968

DESIGNED BY R. Reynolds DATE
DRAWN BY R. Reynolds DATE
TRACED BY R. Luttrell DATE Nov 68
CHECKED BY Bill Burke DATE Dec 1968

CORRECT: [signature] BRIDGE ENGINEER
APPROVED: [signature] STATE HIGHWAY ENGINEER

K-38-154A

NOTE: Top of slab to conform to roadway slope & grade.

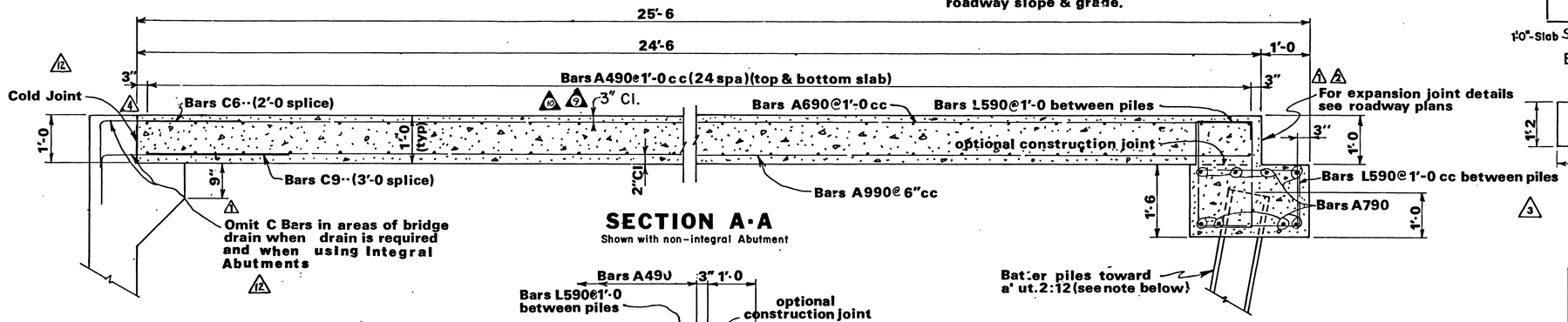

SECTION A-A

Shown with non-integral Abutment

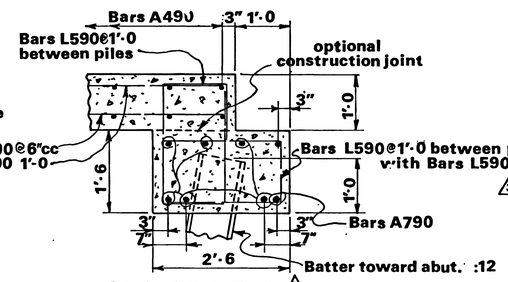

SECTION D D

Note: Location of notch for bridge drain shall be as shown on the Roadway Plans and/or Bridge Plans and shall be constructed in accordance with the fit-up requirements of Standard Drawing D-CB-9 or as directed by the Engineer

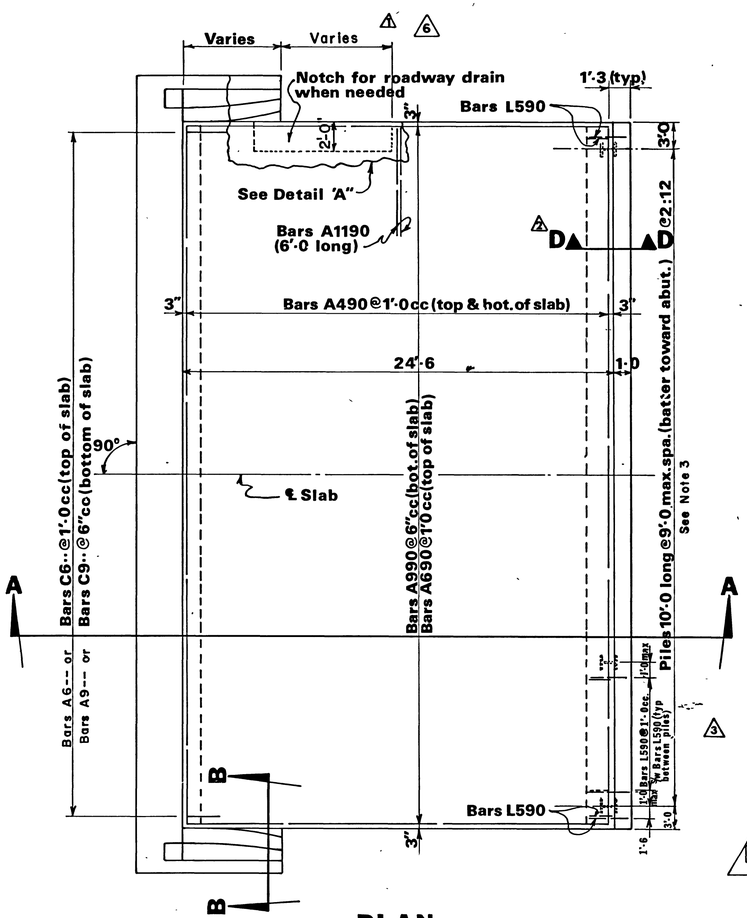

PLAN

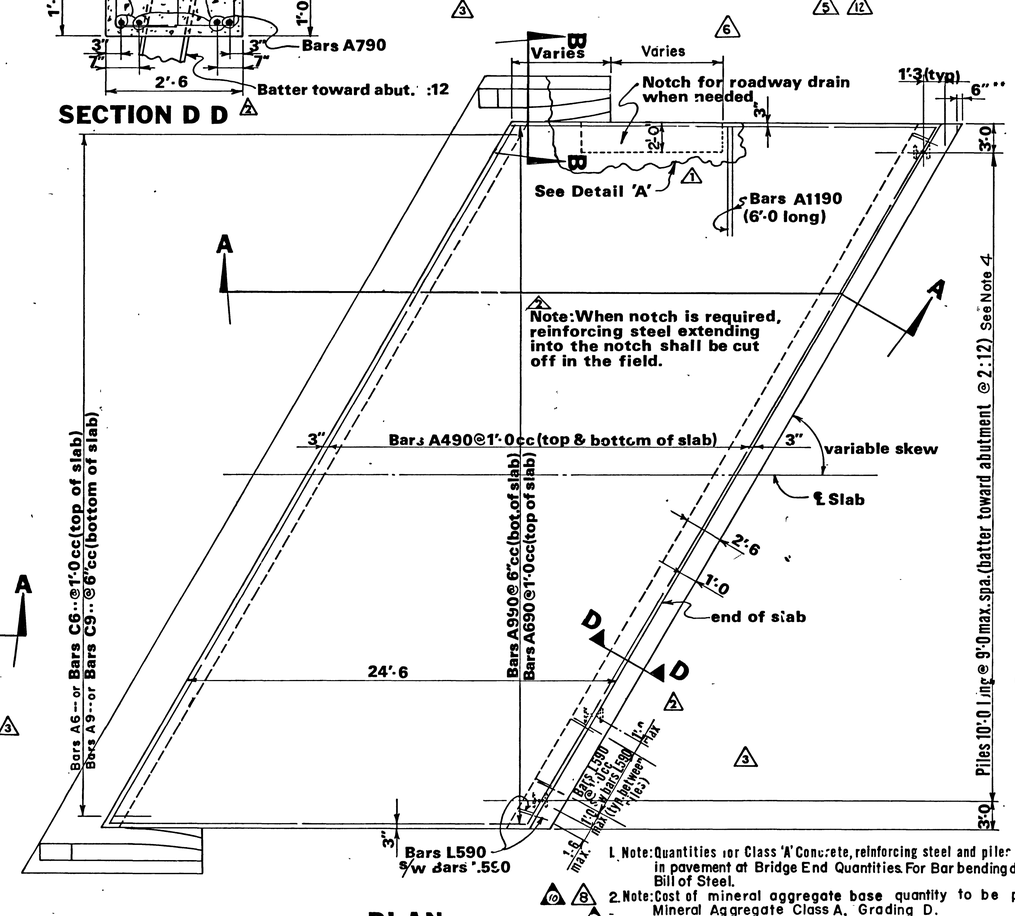

PLAN

**Clip corners 6" for 60° or less

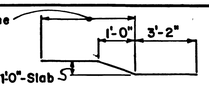

BARS F9--

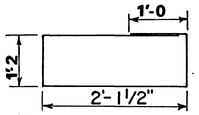

BARS L

Total Length: 7'-5"

PROJECT NO.	YEAR	SHEET NO.

REVISIONS

NO.	DATE	BY	BRIEF DESCRIPTION
1	11-16-70	CMH	Compression seal added, aggregate size changed. General notes revised & bridge drain details.
2	12-18-70	CMH	Section D-D & notes added, compression seal note removed & Expansion joint note added
3	8-12-71	RMD	Clarified spacing & no. of L590 bars
4	3 12 74	RMD	Removed V Notch
5	7-18-75	RMD	Added Detail X & Revised Note 3
6	8-18-75	RMD	Revised Roadway Drain
7	3-2-76	CPR	Changed Dwg No on Detail "A"
8	6-17-76	CMH	Revised aggregate designation
9	8-30-76	RMD	Revised minimum clearances
10	5-Dec-77	EPW	Rev Note 2 & Min Cl. on top Re-bar
11	8-Nov-79	LGH	Change Note 3 to 4, Added New Note 3
12	7-17-81	RMD	deleted Detail "X" Add PART PLAN

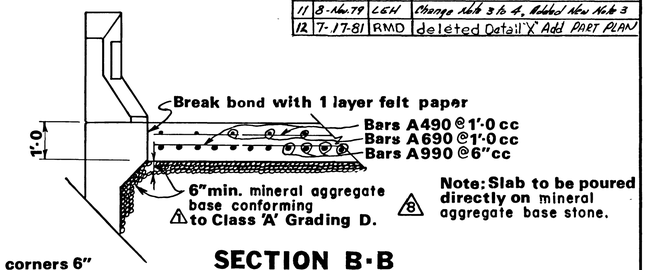

SECTION B-B

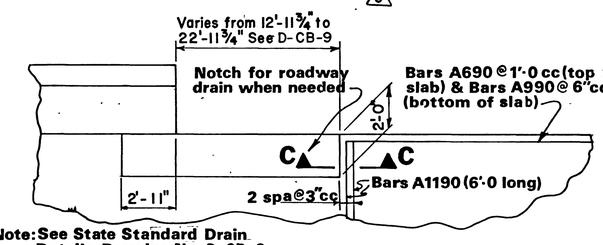

Note: See State Standard Drain Details Drawing No. D CB-9

DETAIL 'A'

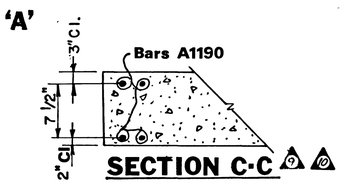

SECTION C-C

GENERAL NOTES

CONCRETE: To be Class 'A' (F'c=3,000 psi)

REINFORCING STEEL: To be ASTM A615. Bending dimensions shown are based on Grade 40. Spacing dimensions are center to center unless otherwise noted.

SPECIFICATIONS: Standard Road & Bridge Specifications of the Tennessee Department of Highways (Current Edition)

STATE OF TENNESSEE
DEPARTMENT OF TRANSPORTATION
BUREAU OF HIGHWAYS

STANDARD DRAWING
REINFORCED CONCRETE PAVEMENT AT BRIDGE ENDS

1. Note: Quantities for Class 'A' Concrete, reinforcing steel and piles are included in pavement at Bridge End Quantities. For Bar bending dimensions, see Bill of Steel.
2. Note: Cost of mineral aggregate base quantity to be paid as Item 303-01 Mineral Aggregate Class A, Grading D.
3. Note: In lieu of the Class A, Grading D material shown, Class B, Grading C or D may be used.
4. Note: Piles shall be HP10@42# or Precast Concrete Size I as shown in Estimated Quantities. Piles shall have a maximum length of 10'-0 regardless of bearing and shall be spaced at 9'-0 maximum. Piles shall be omitted if beam is supported on rock or rock fill or if the Abutment is integral.

DESIGNED BY C.M. Hiles DATE 8-70
DRAWN BY GPM DATE
SUPERVISED BY C.M. Hiles DATE
CHECKED BY D.W. Fortner DATE 10-8-70

CORRECT [signature] ENGINEER OF STRUCTURES
APPROVED [signature] DIRECTOR OF HIGHWAYS

K-86-144

LIST OF DRAWINGS

DRAWING NO.	LAST REVISION DATE	DESCRIPTION
BR-53-33	5-1-02	LAYOUT OF BRIDGES NO. 4 & 5 TO BE REPAIRED.
BR-53-35		ESTIMATED BRIDGE QUANTITIES
BR-53-36		GENERAL NOTES
BR-53-39		TYPICAL CROSS SECTION OF BRIDGES NO. 4 & 5
BR-53-41		BRIDGE REPAIR DETAILS
BR-53-42		EXPANSION JOINT DETAILS

LIST OF REFERENCE DRAWINGS

(TO BE PRINTED WITH PLANS)

	DRAWING NO.	DESCRIPTION
BR. #4	K-99-110	LAYOUT
	K-99-111 THRU K-99-114	SUPERSTRUCTURE
	K-99-115 THRU K-99-116	BENT DETAILS
	K-99-117 THRU K-99-118	ABUTMENT DETAILS
BR. #5	K-99-120	LAYOUT
	K-99-121 THRU K-99-124	SUPERSTRUCTURE
	K-99-125 THRU K-99-126	BENT DETAILS
	K-99-127 THRU K-99-128	ABUTMENT DETAILS
	K-38-154A	BRIDGERAIL
	K-86-144	REINF. CONCRETE PAVEMENT AT BRIDGE ENDS

SPECIAL PROVISION

** DENOTES: CURRENT REVISION DATE, AS PER CONTRACT DOCUMENTS

NO.	LAST REVISION DATE	REGARDING
108B	**	PROJECT COMPLETION AND LIQUIDATED DAMAGES
604H	**	BRIDGE DECK PREPARATION, REPAIR AND CONCRETE OVERLAY USING HYDRODEMOLITION
619A	**	POLYMER MODIFIED CONCRETE (PMC) OVERLAY

BRIDGE APPURTENANCES

DRAWING NO.	LAST REV. DATE	DESCRIPTION
SBR-2-133	01-04-96	DETAILS SHOWING GUARDRAIL ATTACHMENT AT BRIDGE ENDS TO EXISITNG CONCRETE VERTICAL FACE ENDPOST-1989
SBR-2-134	01-04-96	DETAILS SHOWING GUARDRAIL ATTACHMENT AT BRIDGE ENDS TO EXISITNG CONCRETE VERTICAL FACE ENDPOST-1989

PROJECT NO.	YEAR	SHEET NO.
63001-4148-04	2002	11

REVISIONS

NO.	DATE	BY	BRIEF DESCRIPTION
1	5-1-02	BE	ADDED BOXED NOTE & REVISED LIST OF DRAWINGS

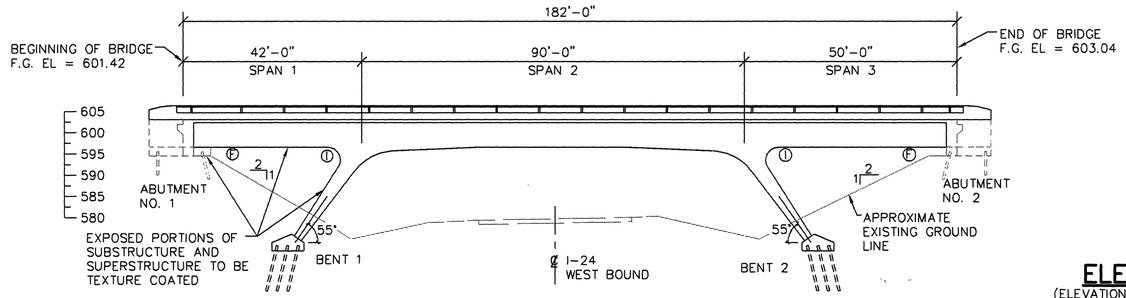

BRIDGE NO. 4

ELEVATION

(ELEVATION @ RIGHT ANGLE TO ℄ SURVEY)
Ⓘ DENOTES: INTEGRAL (EXISTING)
Ⓕ DENOTES: FIXED (EXISTING)

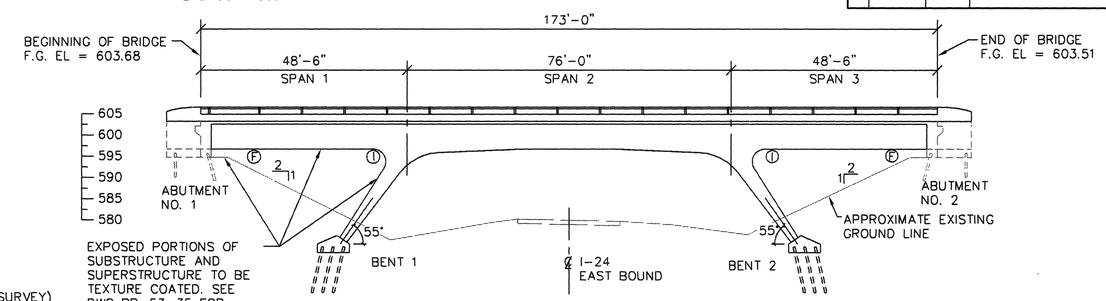

BRIDGE NO. 5

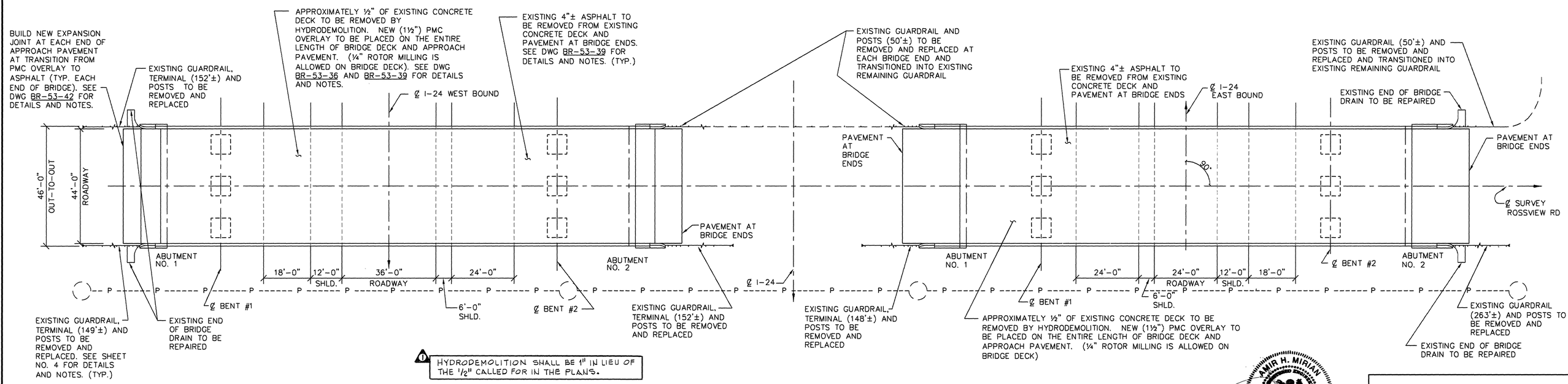

HYDRODEMOLITION SHALL BE 1" IN LIEU OF THE 1/2" CALLED FOR IN THE PLANS.

PLAN

SCOPE OF WORK

1) INSTALL SIGNAL FOR TRAFFIC CONTROL ON THE BRIDGES AND PROVIDE WEEKEND WORK TRAFFIC CONTROL FOR UNDERPASS ROUTE.
2) REMOVE 4"± ASPHALT FROM ENTIRE BRIDGE DECKS.
3) REMOVE APPROX. ½" EXISTING CONCRETE DECK USING HYDRO DEMOLITION. ¼" ROTOR MILLING IS ALLOWED ON BRIDGE DECK.
4) BUILD EXPANSION JOINT AT END OF EACH APPROACH PAVEMENT FOR TRANSITION FROM PMC OVERLAY TO ASPHALT.
5) REPLACE MISSING NUTS ON ANCHOR BOLTS OF METAL RAIL OF PARAPET.
6) PLACE PMC OVERLAY ON ENTIRE LENGTH OF BRIDGE DECKS AND APPROACH PAVEMENTS. MECHANICALLY GROOVE OVERLAY.
7) TEXTURE COAT ENTIRE EXPOSED PORTIONS OF SUPERSTRUCTURE AND SUBSTRUCTURE.
8) REPAIR END OF BRIDGE DRAIN TO ACCOMODATE NEW APPROACH GUARDRAIL.
9) INSTALL NEW APPROACH GUARDRAIL AND TERMINALS.
10) TRANSITION APPROACHES WITH ASPHALT 300 FT. EACH END OF BRIDGE.

------ P ------ P ------ P ------ DENOTES: OVERHEAD POWER LINE

DENOTES: EXISTING UTILITY POLE

AMIR H. MIRIAN — STATE OF TENNESSEE — 8/23/01

STATE OF TENNESSEE
DEPARTMENT OF TRANSPORTATION

LAYOUT OF BRIDGES NO. 4 & 5 TO BE REPAIRED

ROSSVIEW ROAD
OVER
I-24

BRIDGE NO. 63-SR237-2.30 (WBL)
BRIDGE NO. 63-SR237-2.19 (EBL)

MONTGOMERY COUNTY
2002

BR-53-33

TRC INTERNATIONAL, LTD.
CONSULTING ENGINEERS Brentwood, Tennessee 37027
ENG. JOB NO. 01029

DESIGNED BY	M.M. NICHOLSON	DATE	MAY 2001
DRAWN BY	S. HASTINGS / T. BENTLEY	DATE	MAY 2001
SUPERVISED BY	S. RAMANNA, A.H. MIRIAN	DATE	MAY 2001
CHECKED BY	M.M. NICHOLSON	DATE	MAY 2001

PROJECT NO.	YEAR	SHEET NO.
63001-4148-04	2002	2

REVISIONS

NO.	DATE	BY	BRIEF DESCRIPTION

ESTIMATED BRIDGE QUANTITIES

	ITEM NO.	DESCRIPTION	UNIT	BRIDGE NO. 1	BRIDGE NO. 2	BRIDGE NO. 3	BRIDGE NO. 4	BRIDGE NO. 5	BRIDGE NO. 6	TOTAL
1	602-10.40	BRIDGE RAIL METAL POST REPAIR	EACH	2	3	2	–	–	–	7
2	604-04.02	APPLIED TEXTURE FINISH (EXISTING STRUCTURES)	SY	2794	1540	1540	1474	1352	3601	12301
3	604-05.31	BRIDGE DECK GROOVING (MECHANICAL)	SY	1240	848	848	1024	999	1519	6478
4	604-10.14	REMOVE EXISTING WEARING SURFACE	LS	0.2	0.2	0.2	0.2	0.2	–	1
5	604-10.20	HYDRODEMOLITION	SY	1333	903	903	1075	1049	1634	6897
6	604-10.42	CONCRETE REPAIRS	CF	26	39	101	26	26	47	265
7	604-10.44	EXPANSION JOINT REPAIRS	LF	66	75	75	85	85	78	464
8	617-02	BRIDGE DECK CRACK SEALING	LF	842	433	433	585	552	1032	3877
9	617-05	SEALANT (HMWM)	GAL	12	7	7	8	8	14	56
10	619-01	BRIGDE DECK OVERLAY (PMC)	SY	1333	903	903	1075	1049	1634	6897

FOOTNOTES

1. INCLUDES COST OF ALL LABOR AND MATERIALS TO REPLACE A TOTAL OF SEVEN (7) NUTS ON ANCHOR BOLTS OF METAL RAIL WHERE ATTACHED TO PARAPET (BR. #1 – 2 NUTS, BR. #2 – 3 NUTS, BR. #3 – 2 NUTS) ALSO INCLUDES COST OF ALL LABOR AND MATERIALS TO REPLACE SHEARED OFF BOLT ON RIGHT SIDE OF BR. #1. FOR DETAILS AND NOTES, SEE DWG. NO. BR-53-41
2. INCLUDES COST OF ALL LABOR AND MATERIALS TO APPLY TEXTURE FINISH TO THE PARAPET, ENDPOSTS, SIDES AND BOTTOM OF SUPERSTRUCTURE AND EXPOSED AREAS OF SUBSTRUCTURES. FOR DETAILS AND NOTES, SEE THIS SHEET.
3. INCLUDES COST OF ALL LABOR AND MATERIALS TO GROOVE THE NEW PMC OVERLAY WITHIN 1'-0" OF THE TOE OF THE PARAPETS FOR FULL BRIDGE LENGTH AND PAVEMENT AT BRIDGE ENDS.
4. INCLUDES THE COST OF ALL LABOR AND MATERIALS TO REMOVE AND DISPOSE OF EXISTING ASPHALT WEARING SURFACE FROM BRIDGE DECK, (BR. #1, 3"±; BR. #2 & #3, 3"±; BR. #4 & #5, 4"±). FOR DETAILS AND NOTES SEE DWG. NO. BR-53-37, BR-53-38, AND BR-53-39.
5. INCLUDES THE COST OF ALL LABOR, MATERIALS, AND EQUIPMENT TO REMOVE AND DISPOSE OF ALL CONCRETE AND OTHER DEBRIS TO A MINIMUM ½" DEPTH BY HYDRODEMOLITION SUPPLEMENTED BY OTHER NECESSARY MEANS, INCLUDING VACUUMING, SHIELDING, CONTAINMENT, AND FILTRATION OF WASH WATER. FOR NOTES AND DETAILS, SEE DWG. NO. BR-53-36, AND BR-53-37 THRU BR-53-40, AND SPECIAL PROVISION 604H (¼" ROTOR MILLING WILL BE ALLOWED). ALSO INCLUDES THE HYDRODEMOLITION OF PAVEMENT AT BRIDGE ENDS.
6. INCLUDES THE COST OF ALL LABOR AND MATERIALS REQUIRED TO REPAIR SIXTEEN (16) CONCRETE END OF BRIDGE DRAINS WITH HIGH EARLY STRENGTH CONCRETE AFTER NEW APPROACH GUARDRAIL POSTS ARE PLACED. FOR DETAILS AND NOTES, SEE DWG. NO. BR-53-31 THRU BR-53-34 AND BR-53-41.
7. INCLUDES THE COST OF ALL LABOR AND MATERIALS REQUIRED TO INSTALL AN EXPANSION JOINT BETWEEN THE BRIDGE DECK OR PAVEMENT AT BRIDGE ENDS AND ASPHALT APPROACHES. FOR DETAILS AND NOTES, SEE DWG. NO. BR-53-31 THRU BR-53-34 AND BR-53-42.
8. INCLUDES ALL COST FOR INSTALLING DECK SEALER (HMWM) AT CONSTRUCTION JOINTS IN THE POLYMER MODIFIED CONCRETE OVERLAY, INCLUDING DECK SURFACE PREPARATION, CLEANING, LABOR, AND ALL MISCELLANEOUS MATERIALS REQUIRED TO SEAL THE JOINTS, ACCORDING TO MANUFACTURER'S SPECIFICATIONS. THIS ITEM DOES NOT INCLUDE THE COST OF FURNISHING THE BRIDGE DECK SEALER (HMWM). SEE SPECIAL PROVISION 604CR.
9. INCLUDES ALL COST FOR FURNISHING THE SEALER MATERIAL (HMWM) FOR SEALING OVERLAY CONSTRUCTION JOINTS. THE SEALER (HMWM) SHALL BE IN ACCORDANCE WITH SPECIAL PROVISION 604CR. FOR NOTES AND DETAILS SEE DWG. NO. BR-53-37 THRU BR-53-40.
10. INCLUDES ALL COST ASSOCIATED WITH PLACING AND FINISHING OF POLYMER MODIFIED CONCRETE (PMC) OVERLAY. FOR NOTES AND DETAILS SEE DWG. NO. BR-53-36 AND BR-53-37 THRU BR-53-40 AND TENNESSEE DOT STANDARD SPECIFICATION AND SPECIAL PROVISION 619A.

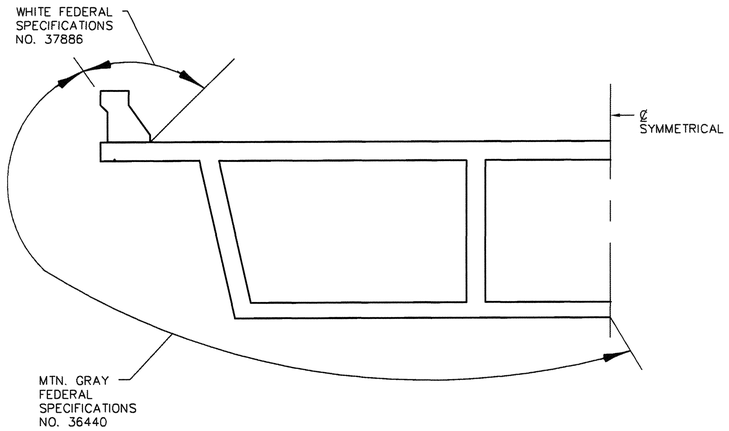

APPLIED TEXTURE FINISH DETAIL

IN ADDITION TO THE SURFACE SHOWN IN THIS DETAIL, ALL EXPOSED SURFACES OF THE ABUTMENTS, WINGWALLS, WINGPOSTS, AND PIERS SHALL RECEIVE AN APPLIED TEXTURE FINISH.

NOTES:

THE CONTRACTOR SHALL CLEAN ALL SURFACES TO RECEIVE APPLIED TEXTURE COATING. ALL CLEANING SHALL BE SATISFACTORY TO THE ENGINEER PRIOR TO APPLYING THE TEXTURE COATING.

THE APPLIED TEXTURE FINISH COLOR FOR BRIDGE SHALL BE SIMILAR TO MOUNTAIN GRAY, FEDERAL SPECIFICATIONS NO. 36640, FEDERAL COLOR STANDARD 595B, EXCEPT THAT THE INSIDE FACE AND TOP OF THE PARAPET SHALL BE WHITE, FEDERAL SPECIFICATION NO. 37886. A COLOR SAMPLE SHALL BE SUMITTED TO THE ENGINEER FOR APPROVAL. A LIST OF APPROVED TEXTURE COATINGS MAY BE OBTAINED FROM THE TENNESSEE DEPARTMENT OF TRANSPORTATION DIVISION OF MATERIALS AND TESTS.

NO TEXTURE FINISH SHALL BE APPLIED PRIOR TO COMPLETION OF PAVING AND HAULING OPERATIONS AT BRIDGE SITE.

COSTS ASSOCIATED WITH CLEANING, FURNISHING AND APPLYING TEXTURE COATING AND ALL LABOR AND NECESSARY MATERIALS SHALL BE INCLUDED IN ITEM NO. 604-04.02, APPLIED TEXTURE FINISH (EXISTING STRUCTURE), S.Y.

SEE SHEETS 5 THRU 8A FOR TRAFFIC CONTROL FOR TEXTURE COATING. SEE SPECIAL NOTE BELOW REGARDING LANE CLOSURES FOR INTERSTATE 24.

THE CONTRACTOR SHALL MASK SIGNS AND ALUMINUM BRIDGE RAILING PRIOR TO TEXTURE COATING.

LANE CLOSURES FOR I-24

ALL LANE CLOSURES ON I-24 SHALL BE DONE ON THE WEEKEND (8:00PM FRIDAY TO 5:00AM MONDAY) LANES SHALL BE CLOSED FOR A TOTAL OF 8 WEEKENDS.

	NUMBER OF WEEKENDS	
BRIDGE NUMBER	EASTBOUND	WESTBOUND
(1) 63-A281-0.87	1	1
(2) 63-1880-1.99	–	1
(3) 63-1880-1.90	1	–
(4) 63-SR237-2.30	–	1
(5) 63-SR237-2.19	1	–
(6) 63-1882-1.87	1	1

AMIR H. MIRIAN No. 101[illegible] STATE OF TENNESSEE 8/23/01

SPECIAL NOTES FOR I-24:

THE CONTRACTOR SHALL BE REQUIRED TO PROVIDE SHIELDING MATERIALS TO PROTECT MOTORIST FROM DEBRIS AND/OR OTHER MATERIALS THAT MAY BE A HAZARD OR PRODUCE HAZARDOUS CONDITIONS TO THE PUBLIC.

THE CONTRACTOR SHALL NOT BE ALLOWED TO INTERRUPT TRAFFIC FLOW AND SHALL MAINTAIN ALL LANES OF TRAFFIC IN EACH DIRECTION ON THE FOLLOWING DAYS:

A) OFFICIAL STATE HOLIDAYS
B) FRIDAY AFTERNOON UNTIL TUESDAY MORNING, IF A STATE HOLIDAY OCCURS OR IS OBSERVED ON MONDAY.
C) THURSDAY AFTERNOON UNTIL MONDAY MORNING, IF A STATE HOLIDAY OCCURS OR IS OBSERVED ON FRIDAY.

TRC INTERNATIONAL, LTD.
CONSULTING ENGINEERS Brentwood, Tennessee 37027
ENG. JOB NO. 01029

DESIGNED BY M.M. NICHOLSON DATE MAY 2001
DRAWN BY L.C. NIXON / T. BENTLEY DATE MAY 2001
SUPERVISED BY S. RAMANNA, A.H. MIRIAN DATE MAY 2001
CHECKED BY M.M. NICHOLSON DATE MAY 2001

STATE OF TENNESSEE
DEPARTMENT OF TRANSPORTATION

ESTIMATED BRIDGE QUANTITIES

DURHAM ROAD OVER I-24
TROUGH SPRINGS ROAD OVER I-24(WBL)
TROUGH SPRINGS ROAD OVER I-24(EBL)
ROSS VIEW ROAD OVER I-24(WBL)
ROSS VIEW ROAD OVER I-24(EBL)
DUNLOP ROAD OVER I-24
BRIDGE NO. 63-A281-0.87
BRIDGE NO. 63-1880-1.99
BRIDGE NO. 63-1880-1.90
BRIDGE NO. 63-SR237-2.30
BRIDGE NO. 63-SR237-2.19
BRIDGE NO. 63-1882-1.87

MONTGOMERY COUNTY
2002

BR-53-35

GENERAL NOTES

SPECIFICATIONS: STANDARD ROAD AND BRIDGE SPECIFICATIONS OF THE TENNESSEE DEPARTMENT OF TRANSPORTATION (MARCH 1, 1995 EDITION).

DESIGN SPECIFICATIONS: AASHTO 1996 EDITION WITH ADDENDA.

REINFORCING STEEL: SEE THE STANDARD SPECIFICATIONS.

BOLTS: SHALL BE HIGH TENSILE STRENGTH BOLTS (ASTM-A325), UNLESS OTHERWISE NOTED. SIZE TO BE AS NOTED ON PLANS. SEE AASHTO SPECIFICATIONS; ARTICLE 11.5.6, DIVISION II.

HIGH EARLY 18 HOUR CONCRETE
CONCRETE IS TO BE A HIGH EARLY STRENGTH CONCRETE WITH A COMPRESSIVE STRENGTH OF 3000 P.S.I. AT 18 HOURS THE CONTRACTOR SHALL PROVIDE PROOF PRIOR TO BEGINNING WORK THAT THE PROPOSED CONCRETE MIX WILL OBTAIN REQUIRED PROPERTIES. PROOF SHALL BE PROVIDED BY AN INDEPENDENT TESTING COMPANY AND SUBMITTED TO THE TENNESSEE DEPARTMENT OF TRANSPORTATION MATERIALS AND TEST DIVISION FOR APPROVAL. NO TRAFFIC SHALL BE PERMITTED ON ANY OF THE REPAIR AREAS UNTIL TEST SPECIMENS ATTAIN A MINIMUM COMPRESSIVE STRENGTH OF 3000 P.S.I. AND THE CONCRETE HAS BEEN IN PLACE A MINIMUM OF 18 HOURS.

HIGH EARLY STRENGTH CONCRETE: THE MIX TO MEET THE REQUIREMENTS OF THE STANDARD SPECIFICATIONS, CLASS "A", EXCEPT THE CEMENT CONTENT SHALL BE A MINIMUM OF 714 LBS., THE WATER CEMENT RATIO SHALL BE A MAXIMUM OF 0.40, NO FLY ASH REPLACEMENT WILL BE PERMITTED, AND THE MINIMUM 28 DAY COMPRESSIVE STRENGTH SHALL BE 3,500 P.S.I. TRAFFIC SHALL NOT BE PERMITTED ON ANY OF THE REPAIR AREAS UNTIL TEST SPECIMENS ATTAIN A COMPRESSIVE STRENGTH OF 3,000 P.S.I. MINIMUM AND THE CONCRETE HAS BEEN IN PLACE A MINIMUM OF TEN (10) DAYS.

BRIDGE DECK SURFACE FINISH; SHALL BE IN ACCORDANCE WITH METHOD (C) IN SUBSECTION 604.23 OF THE STANDARD SPECIFICATIONS.

CONCRETE CURING: ALL CONCRETE IN REPAIR AREAS SHALL BE CURED ACCORDING TO THE STANDARD SPECIFICATIONS.

SPECIAL NOTE FOR ROADWAY BELOW; CONTRACTOR SHALL USE EXTREME CARE AND TAKE ANY MEASURE NECESSARY TO INSURE THAT NO DEBRIS IS DROPPED ONTO THE ROADWAY BELOW. ANY DEBRIS WHICH IS ALLOWED TO DROP ONTO THE ROADWAY BELOW THE BRIDGE SHALL BE REMOVED AND DISPOSED OF BY THE CONTRACTOR. COST OF REMOVAL AND DISPOSAL OF DEBRIS SHALL BE INCLUDED IN ITEMS BID ON.

DEMOLITION; THE CONTRACTOR SHALL TAKE SPECIAL CARE TO PROTECT ANY PARTS OF THE STRUCTURE THAT ARE NOT TO BE REMOVED SPECIFICALLY. THE CONTRACTOR IS NOT ALLOWED TO USE A HYDRAULIC RAM MOUNTED ON A BACK HOE (COMMONLY CALLED A HOE RAM) OR OTHER SIMILARLY HEAVY EQUIPMENT FOR CONCRETE REMOVAL. PNEUMATIC HAMMERS MAY BE USED TO REMOVE UNSOUND CONCRETE. FOR FULL DEPTH OF CONCRETE SLAB REMOVAL EXCEPT OVER BEAMS, THE MAXIMUM HAMMER SIZE IS 90 POUND CLASS. FOR PARTIAL DEPTH OF CONCRETE SLAB REMOVAL AND ANY WORK OVER BEAMS, THE MAXIMUM HAMMER SIZE IS 60 POUND CLASS. SAWING OR CUTTING OF THE CONCRETE IS ACCEPTABLE SO LONG AS ANY SPECIFIED PROJECTION OF THE EXISTING REINFORCING STEEL IS MAINTAINED. ALL DEVICES PROPOSED FOR CONCRETE DEMOLITION SHALL MEET THE APPROVAL OF THE ENGINEER.

QUICK-SET PATCHING MATERIAL; QUICK-SET PATCHING MATERIAL SHALL BE A POLYMER MODIFIED CEMENTITIOUS PATCHING MATERIAL. SEE T.D.O.T. QUALIFIED PRODUCTS LIST 13, SUB LIST F, FOR ACCEPTABLE PATCHING MATERIALS.

SUGGESTED POLYMER MODIFIED CONCRETE CURING PROCEDURES:

COVER THE OVERLAY PROMPTLY WITH A SINGLE LAYER OF WET BURLAP, NEW BURLAP, EVEN WHEN PRESOAKED, CAN DRY OUT QUICKLY AND SHOULD BE AVOIDED OR PRESOAKED FOR SEVERAL DAYS. IT MAY REQUIRE THE BURLAP TO BE WET, LET DRY OUT, AND THIS PROCEDURE REPEATED SEVERAL TIMES TO ALLOW TOTAL ABSORPTION. USE WHITE VISQUEEN (PLASTIC) TO COVER THE WET BURLAP DURING THE OVERLAY IN HOT WEATHER.

PLACE THE WET BURLAP ON THE OVERLAY AS SOON AS POSSIBLE. CONSISTENTLY SPRAY A MIST OF WATER OVER THE BURLAP BEFORE IT IS COVERED WITH WHITE VISQUEEN (PLASTIC). HOWEVER SPRAYING THE BURLAP WITH WATER BEFORE COVERING WITH WHITE VISQUEEN (PLASTIC) SHOULD NOT BE EXCESSIVE TO THE POINT THE WATER IS DAMAGING THE FRESH OVERLAY SURFACE.

THE WHITE VISQUEEN (PLASTIC) SHOULD BE PULLED, PLACED AND KEPT WITHIN TEN TO THIRTY FEET OF THE FRONT COVER OF BURLAP. THESE DISTANCES SHOULD BE ADJUSTED BASED ON THE WEATHER CONDITIONS AT THE TIME OF PLACEMENT. SECURE THE PLASTIC SO IT WILL NOT BLOW OFF THE BURLAP DURING THE WET CURE. MINIMIZING THE NUMBER OF SEAMS IN THE PLASTIC IS BEST SUITED AND EASIER TO SECURE.

SECURE THE PLASTIC BY USING THE RAILS, ROLLING OVER THE EDGES OF WET BURLAP ONTO THE PLASTIC, LAYING FOLDED WET BURLAP TRANSVERSELY ACROSS THE DECK OR BY KEEPING WATER ON THE SURFACE OF THE PLASTIC. SEAL THE PLASTIC TO AVOID THE WIND FROM PUFFING UP THE PLASTIC DURING THE WET CURE. EXERCISE CAUTION WHEN WETTING DOWN THE SURFACE OF THE PLASTIC SO AS NOT TO ALLOW THE WATER TO RUN INTO THE OVERLAY BEING PLACED.

DURING HOT SUMMER OVERLAYS, SOAKER HOSES SHOULD BE PLACED UNDER THE PLASTIC. THIS SHOULD BE DONE WHEN THE OVERLAY HAS SET LONG ENOUGH TO SUPPORT THE WEIGHT OF THE SOAKER HOSES AND AFTER THE OVERLAY PLACEMENT IS COMPLETED. USING THE COOLEST WATER POSSIBLE WILL GREATLY ENHANCE ALL THE PROCEDURES IN HOT WEATHER.

A RANDOM SAMPLE OF THE LATEX SHALL BE TAKEN OFF EACH CONCRETE MOBILE SUPPLIER TO BE TAKEN TO THE T.D.O.T. DEPARTMENT OF MATERIALS AND TEST FOR EVALUATION. THE RANDOM SAMPLE WILL BE APPROXIMATELY ONE (1) QUART.

AN ENGINEER FROM THE OFFICE OF BRIDGE INSPECTION AND REPAIR SHALL BE PRESENT FOR THE INITIAL CALIBRATION OF THE CONCRETE MOBILE.

THE ENGINEER SHALL CHECK AND MEASURE THE VOLUME OF THE LATEX, CEMENT, AGGREGATE AND WATER OF THE CONCRETE MOBILE BEFORE AND AFTER AS AN APPROXIMATE CHECK OF THE CALIBRATION OF THE CONCRETE MOBILE.

SPECIAL NOTE CONCERNING PLACEMENT OF THE POLYMER MODIFIED CONCRETE (PMC) OVERLAY

THE POLYMER MODIFIED CONCRETE (PMC) OVERLAY SHALL BE PLACED ONLY DURING NIGHT-TIME HOURS, EXCEPT WHEN SPECIFICALLY AUTHORIZED BY THE ENGINEER. NIGHT-TIME HOURS SHALL BE DEFINED AS THE TIME BETWEEN SUNSET AND SUNRISE. STRICT ADHERENCE TO CURING THE PMC OVERLAY AS PER TENNESSEE DOT STANDARD SPECIFICATIONS SHALL BE MAINTAINED.

PROJECT NO.	YEAR	SHEET NO.
63001-4148-04	2002	2A

REVISIONS

NO.	DATE	BY	BRIEF DESCRIPTION

ALL BRIDGES:

COLDPLANE MILLED MATERIAL IS TO BE USED TO BACKFILL ALL ERODED AREAS NEEDED.
ANY ADDITIONAL MATERIAL NEEDED FOR BACKFILLING IS TO BE INCLUDED IN OTHER ITEMS BID ON.

OVERGROWN VEGETATION IS TO BE REMOVED SIX (6) FEET OFF THE SUPERSTRUCTURE.
THE COST OF REMOVING AND DISPOSING OF VEGETATION SHALL BE INCLUDED IN OTHER ITEMS BID ON.

CONTRACTOR SHALL USE EXTREME CARE AND TAKE ANY MEASURE NECESSARY TO INSURE THAT THERE IS NO WATER RUN OFF FROM ANY OF THE BRIDGES. THE COST OF CONTAINING AND DISPOSING OF ALL RUN OFF SHALL BE INCLUDED IN OTHER ITEMS BID ON.

THE CONTRACTOR SHALL NOT DISPOSE ANY MATERIAL EITHER ON OR OFF STATE-OWNED R.O.W. IN A REGULATORY FLOOD WAY AS DEFINED BY THE FEDERAL EMERGENCY MANAGEMENT AGENCY WITHOUT APPROVAL BY SAME. ALL MATERIAL SHALL BE DISPOSED OF IN UPLAND (NON-WETLAND) AREAS AND ABOVE ORDINARY HIGH WATER OF ANY ADJACENT WATERCOURSE. THIS DOES NOT ELEMINATE THE NEED TO OBTAIN ANY OTHER LISCENSES OR PERMITS THAT MAY BE REQUIRED BY ANY OTHER FEDERAL, STATE OR LOCAL AGENCY.

ANY AREA THAT IS DISTURBED OUTSIDE LIMITS OF CONSTRUCTION DURING THE LIFE OF THIS PROJECT SHALL BE REPAIRED BY THE CONTRACTOR AT HIS EXPENSE.

DAMAGE TO ANY DEPARTMENT OF TRANSPORTATION STRUCTURE DURING THE COURSE OF THE CONSTRUCTION SHALL BE THE RESPONSIBILITY OF THE CONTRACTOR AND SHALL BE REPAIRED OR REPLACED AT HIS OWN EXPENSE.

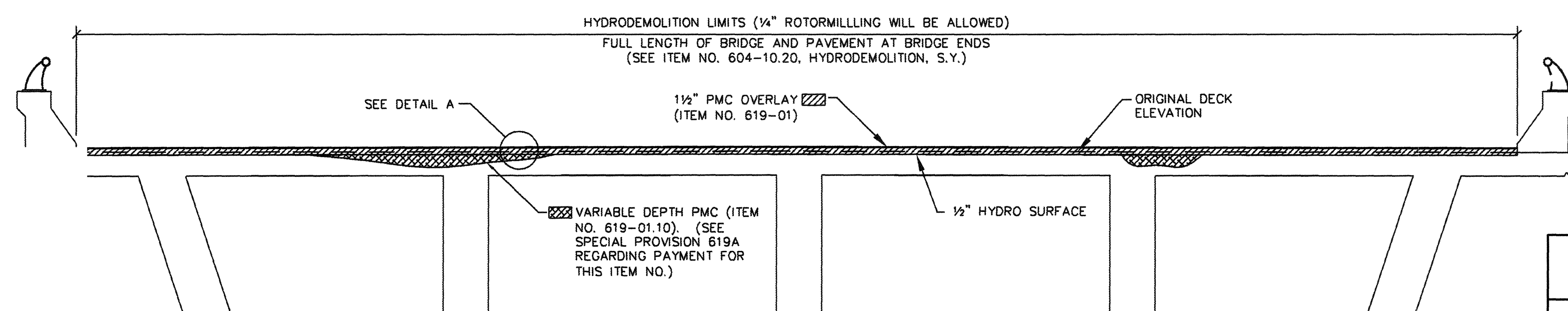

DETAIL SHOWING LIMITS FOR CONCRETE PAY ITEMS

SPECIAL NOTE CONCERNING USE OF HYDRODEMOLITION FOR SCARIFYING DECK ½", PARTIAL DEPTH CONCRETE REMOVAL AND NEW CONCRETE

(THIS IS A GENERAL DESCRIPTION OF WORK REQUIRED AND PAYMENT FOR THAT WORK. SEE SPECIAL PROVISION 604H AND 619A FOR EXACT LIMITS OF WORK AND PAYMENT CONCERNING HYDRODEMOLITION AND NEW PMC OVERLAY.)

THE ENTIRE DECK AREA ON THE BRIDGE AND PAVEMENT AT BRIDGE ENDS SHALL RECEIVE HYDRODEMOLITION AS DESCRIBED BELOW. THE AREA OF THE DECK AND PAVEMENT AT BRIDGE ENDS SHALL RECEIVE HYDRODEMOLITION TO A ½" MINIMUM DEPTH AND HAVE PARTIAL DEPTH DETERIORATED CONCRETE REMOVED USING HYDRODEMOLITION. PARTIAL DEPTH AREAS WILL NOT BE MARKED ON THE DECK BUT WILL BE REMOVED AS THE HYDRODEMOLITION COMES IN CONTACT WITH PARTIAL DEPTH DETERIORATED CONCRETE WHILE SCARIFYING. THESE AREAS SHALL BE PAID FOR UNDER ITEM NO. 604-10.20, HYDRODEMOLITION, S.Y.

THE NEW POLYMER MODIFIED CONCRETE PLACED IN AREAS OF PARTIAL DEPTH REMOVAL UP TO ½" BELOW THE ORIGINAL BRIDGE DECK ELEVATION SHALL BE PAID FOR UNDER ITEM NO. 619-01.10, POLYMER MODIFIED CONCRETE (VARIABLE DEPTH), C.Y. SEE SPECIAL PROVISION 619A, AND WILL BE PLACED AT THE SAME TIME AS THE NEW 1½" PMC OVERLAY. THE NEW 1½" PMC OVERLAY WHICH INCLUDES THE PMC (SEE DETAIL A, THIS SHEET, AND SPECIAL PROVISION 619A FOR CLARIFICATION) ABOVE ½" BELOW ORIGINAL BRIDGE DECK ELEVATION SHALL BE PAID FOR UNDER ITEM NO. 619-01, BRIDGE DECK OVERLAY (PMC), S.Y.

¼" ROTORMILLING OF THE CONCRETE DECK WILL BE ALLOWED PRIOR TO HYDRODEMOLITION.

PRESSURE WASHING OF 5000 PSI AND VACUUMING OF THE HYDRODEMOLITIONED SURFACES SHALL BE DONE PRIOR TO PLACEMENT OF THE NEW PMC OVERLAY TO ENSURE A DECK FREE OF ANY LOOSE MATERIAL. THE SURFACES SHALL MEET WITH THE APPROVAL OF THE ENGINEER BEFORE PLACEMENT OF THE PMC IS ALLOWED.

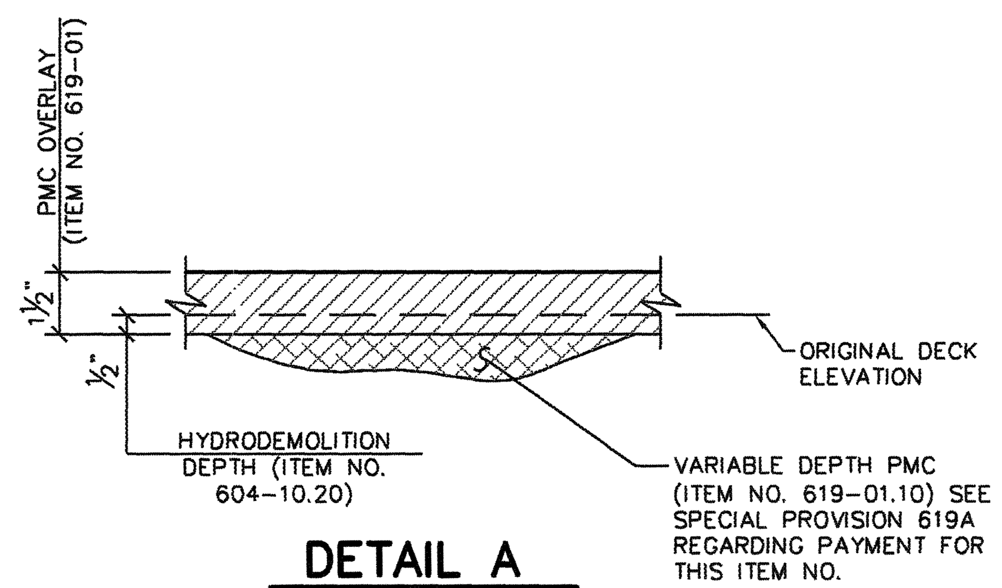

DETAIL A

TRC INTERNATIONAL, LTD.
CONSULTING ENGINEERS Brentwood, Tennessee 37027
ENG. JOB NO. 01029

DESIGNED BY M.M. NICHOLSON DATE MAY 2001
DRAWN BY J.M. VARRIN / T. BENTLEY DATE MAY 2001
SUPERVISED BY S. RAMANNA, A.H. MIRIAN DATE MAY 2001
CHECKED BY M.M. NICHOLSON DATE MAY 2001

AMIR H. MIRIAN
STATE OF TENNESSEE
8/23/01

STATE OF TENNESSEE
DEPARTMENT OF TRANSPORTATION

GENERAL NOTES

DURHAM ROAD OVER I-24
TROUGH SPRINGS ROAD OVER I-24(WBL)
TROUGH SPRINGS ROAD OVER I-24(EBL)
ROSS VIEW ROAD OVER I-24(WBL)
ROSS VIEW ROAD OVER I-24(EBL)
DUNLOP ROAD OVER I-24
BRIDGE NO. 63-A281-0.87
BRIDGE NO. 63-1880-1.99
BRIDGE NO. 63-1880-1.90
BRIDGE NO. 63-SR237-2.30
BRIDGE NO. 63-SR237-2.19
BRIDGE NO. 63-1882-1.87
MONTGOMERY COUNTY
2002

BR-53-36

PROJECT NO.	YEAR	SHEET NO.
63001-4148-04	2002	

REVISIONS

NO.	DATE	BY	BRIEF DESCRIPTION

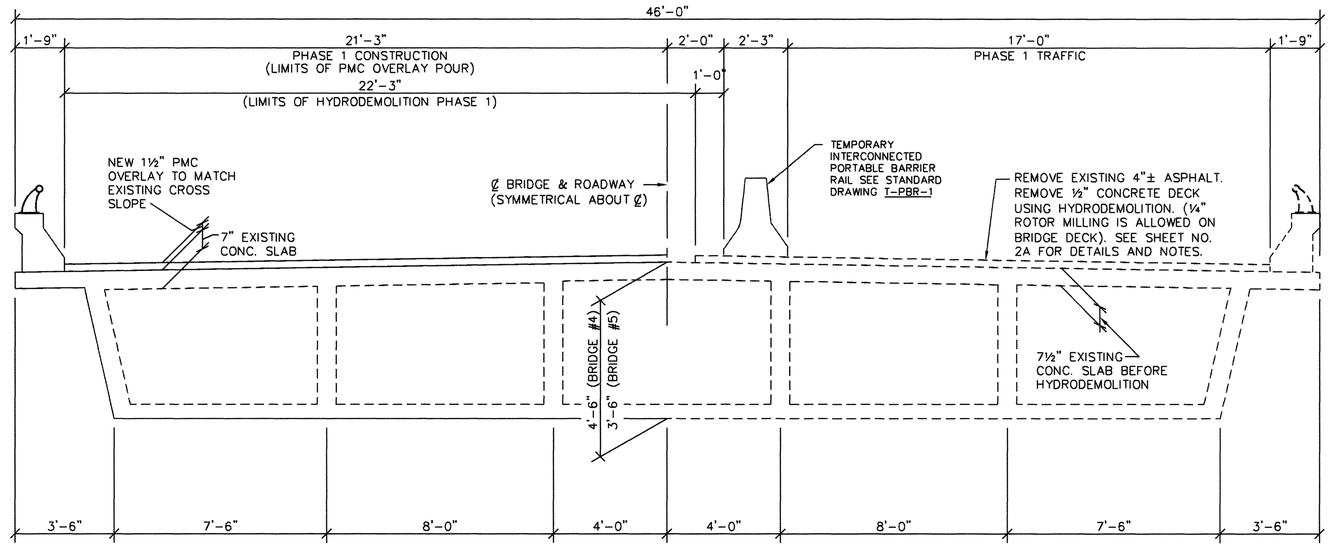

PHASE 1 CONSTRUCTION
(LOOKING FORWARD ON SURVEY)

NOTES:

SEE SHEET NO. 2A FOR DETAILS AND NOTES CONCERNING THE PAYMENT OF HYDRODEMOLITION AND PMC OVERLAY.

THE NEW 1½" PMC OVERLAY SHALL MATCH EXISTING CROSS SLOPE. SEE GRADE INFORMATION ON REF. DWG. NO. K-99-110, K-99-114, K-99-120 AND K-99-124.

PAVEMENT AT BRIDGE ENDS ARE TO BE HYDRODEMOLITIONED.

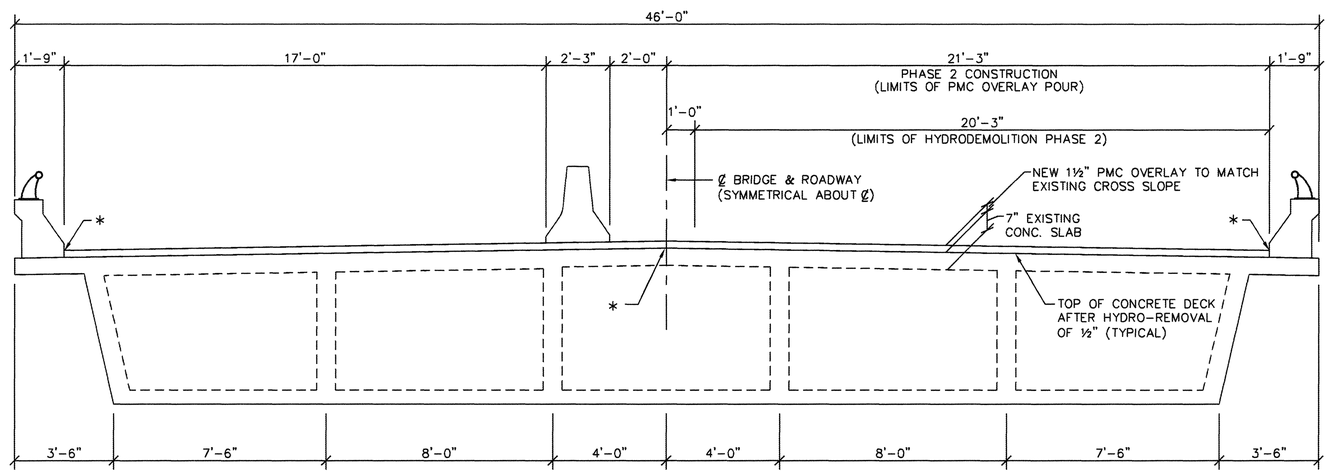

PHASE 2 CONSTRUCTION
(LOOKING FORWARD ON SURVEY)

* DENOTES: BRIDGE DECK CRACK SEALER (HMWM) TO BE PLACED AT CONSTRUCTION JOINT (TYP) AND JOINT AT PARAPET. COST OF ALL LABOR AND MATERIAL TO BE PAID FOR UNDER ITEM NO.'S 617-02 AND 617-05.

AMIR H. MIRIAN
No. 101586
STATE OF TENNESSEE
08/23/01

TRC INTERNATIONAL, LTD.
CONSULTING ENGINEERS Brentwood, Tennessee 37027
ENG. JOB NO. 01029

DESIGNED BY	M.M. NICHOLSON	DATE	MAY 2001
DRAWN BY	S. HASTINGS / T. BENTLEY	DATE	MAY 2001
SUPERVISED BY	S. RAMANNA, A.H. MIRIAN	DATE	MAY 2001
CHECKED BY	M.M. NICHOLSON	DATE	MAY 2001

STATE OF TENNESSEE
DEPARTMENT OF TRANSPORTATION

TYPICAL CROSS-SECTION OF BRIDGES NO. 4 & 5

ROSSVIEW ROAD
OVER
I-24

BRIDGE NO. 63-SR237-2.30 (WBL)
BRIDGE NO. 63-SR237-2.19 (EBL)

MONTGOMERY COUNTY
2002

BR-53-39

DRAIN REPAIR SCHEDULE		
LOCATION OF DRAIN	NO. OF DRAINS REPAIRED	ITEM NO. 604-10.42 CONCRETE REPAIRS, CF
BR #3	2	80

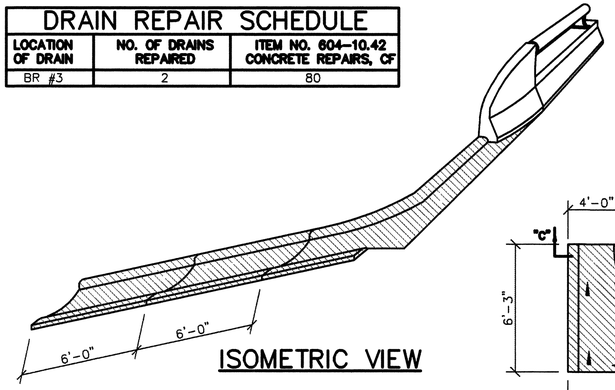

ISOMETRIC VIEW

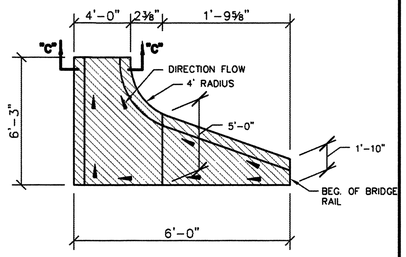

BRIDGE DRAIN PLAN

NEW BRIDGE DRAIN DETAIL
(BRIDGE NO. 3)

DRAIN REPAIR SCHEDULE		
LOCATION OF DRAIN	NO. OF DRAINS REPAIRED	ITEM NO. 604-10.42 CONCRETE REPAIRS, CF
BR #1	2	26
BR #2	3	39
BR #5	2	26
BR #6	3	39
TOTAL	10	130

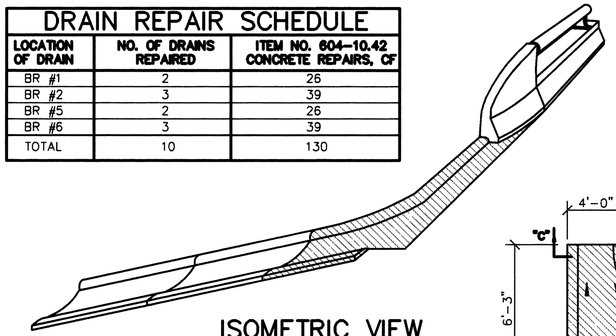

ISOMETRIC VIEW

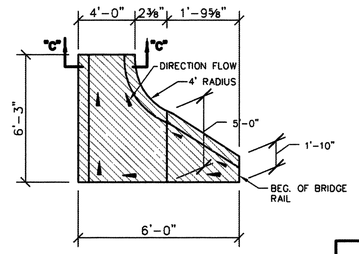

BRIDGE DRAIN PLAN

BRIDGE DRAIN REPLACEMENT DETAIL
(BRIDGE NO. 1, 2, 5 AND 6)

PROJECT NO.	YEAR	SHEET NO.
63001-4148-04	2001	

REVISIONS

NO.	DATE	BY	BRIEF DESCRIPTION

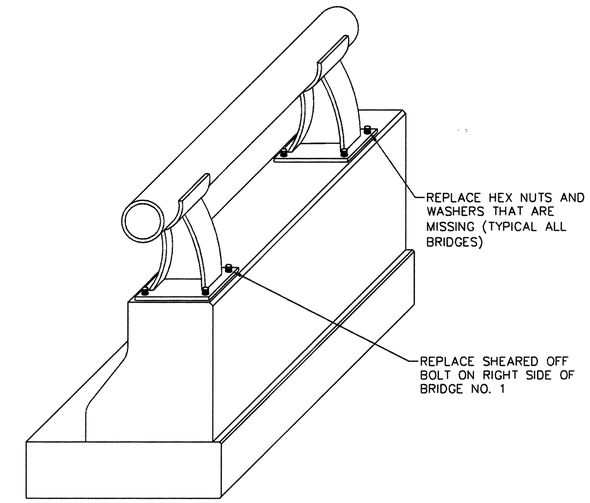

DETAIL SHOWING RAILING REPAIRS

NOTES:

NEW ¾" HEX NUTS W/ WASHERS AND ANCHOR BOLT SHALL BE GALVANIZED STEEL. COST OF ALL LABOR AND ANY MISCELLANEOUS MATERIALS NECESSARY FOR REPLACING THE HEX NUTS, WASHERS AND ANCHOR BOLT WITH GALVANIZED STEEL SHALL BE PAID FOR UNDER ITEM NO. 602-10.40, BRIDGE RAIL METAL POST REPAIR, EACH.

LOCATION	BRIDGE NO. 1	BRIDGE NO. 2	BRIDGE NO. 3	TOTAL
NO. OF HEX NUTS	2	3	2	7

DRAIN REPAIR SCHEDULE		
LOCATION OF DRAIN	NO. OF DRAINS REPAIRED	ITEM NO. 604-10.42 CONCRETE REPAIRS, CF
BR #3	1	21

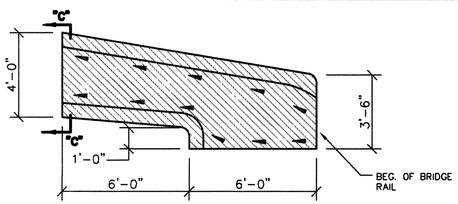

BRIDGE DRAIN PLAN

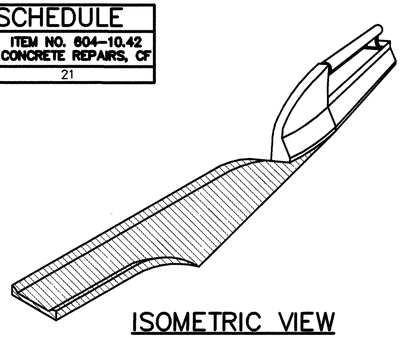

ISOMETRIC VIEW

BRIDGE DRAIN REPLACEMENT DETAIL
(BRIDGE NO. 3)

DRAIN REPAIR SCHEDULE		
LOCATION OF DRAIN	NO. OF DRAINS REPAIRED	ITEM NO. 604-10.42 CONCRETE REPAIRS, CF
BR #4	2	26

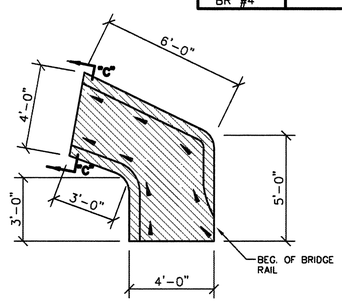

BRIDGE DRAIN PLAN

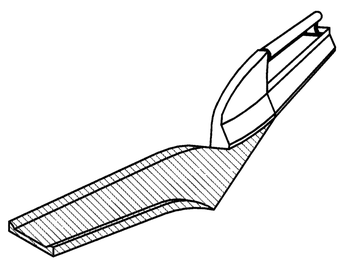

ISOMETRIC VIEW

BRIDGE DRAIN REPLACEMENT DETAIL
(BRIDGE NO. 4)

DRAIN REPAIR SCHEDULE		
LOCATION OF DRAIN	NO. OF DRAINS REPAIRED	ITEM NO. 604-10.42 CONCRETE REPAIRS, CF
BR #6	1	8

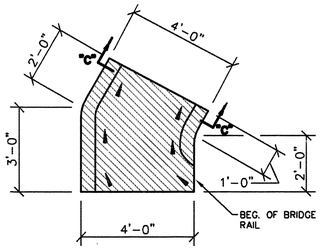

BRIDGE DRAIN PLAN

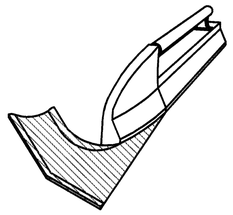

ISOMETRIC VIEW

BRIDGE DRAIN REPLACEMENT DETAIL
(BRIDGE NO. 6)

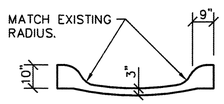

SECTION "C-C"

PORTION OF EXISTING CONCRETE DRAIN TO BE REMOVED AND REPLACED OR NEW DRAIN INSTALLED WITH HIGH EARLY STRENGTH CONCRETE.

NOTES:

THE REPAIRS OR INSTALLATION OF THE BRIDGE DRAINS SHOWN ABOVE SHALL BE POURED AFTER THE NEW APPROACH GUARDRAIL POSTS HAVE BEEN INSTALLED.

THE COST OF ALL LABOR AND MATERIALS NECESSARY FOR THE DRAIN REPAIRS AND INSTALLATION SHALL BE INCLUDED IN ITEM NO. 604-10.42, CONCRETE REPAIRS, CF.

SEE DRAWINGS BR-53-31, BR-53-32, BR-53-33, AND BR-53-34 FOR LOCATION OF DRAINS.

COLDPLANE MILLED MATERIAL IS TO BE USED TO BACKFILL ALL ERODED AREAS NEEDED. ANY ADDITIONAL MATERIAL NEEDED FOR BACKFILLING IS TO BE INCLUDED IN OTHER ITEMS BID ON.

STATE OF TENNESSEE
DEPARTMENT OF TRANSPORTATION

BRIDGE REPAIR DETAILS

DURHAM ROAD OVER I-24
TROUGH SPRINGS ROAD OVER I-24(WBL)
TROUGH SPRINGS ROAD OVER I-24(EBL)
ROSSVIEW ROAD OVER I-24(WBL)
ROSSVIEW ROAD OVER I-24(EBL)
DUNLOP ROAD OVER I-24
BRIDGE NO. 63-A281-0.87
BRIDGE NO. 63-1880-1.99
BRIDGE NO. 63-1880-1.90
BRIDGE NO. 63-SR237-2.30
BRIDGE NO. 63-SR237-2.19
BRIDGE NO. 63-1882-1.87

MONTGOMERY COUNTY
2001

BR-53-41

TRC INTERNATIONAL, LTD.
CONSULTING ENGINEERS Brentwood, Tennessee 37027
ENG. JOB NO. 01029

DESIGNED BY M.M. NICHOLSON DATE MAY 2001
DRAWN BY L.C. NIXON / T. BENTLEY DATE MAY 2001
SUPERVISED BY S. RAMANNA, A.H. MIRIAN DATE MAY 2001
CHECKED BY M.M. NICHOLSON DATE MAY 2001

PROJECT NO.	YEAR	SHEET NO.
63001-4148-04	2002	

REVISIONS

NO.	DATE	BY	BRIEF DESCRIPTION

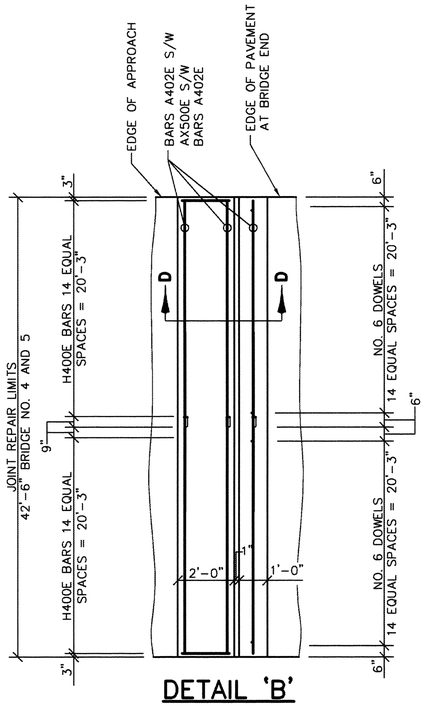

DETAIL 'B'

(BRIDGES 4 AND 5)

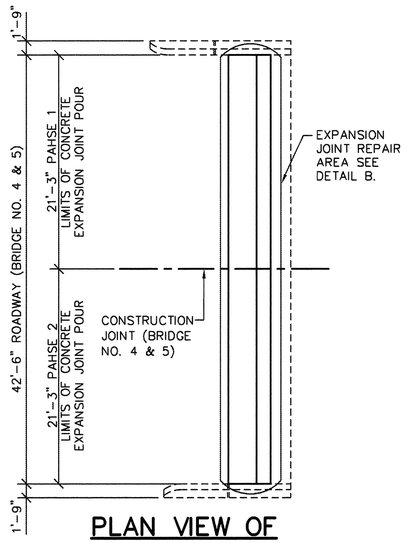

PLAN VIEW OF END OF BRIDGE NO. 4 AND NO. 5

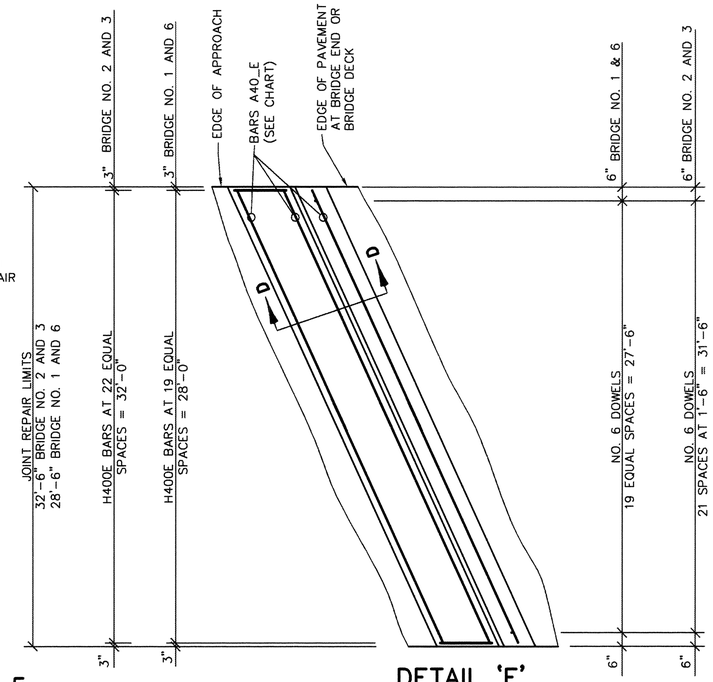

DETAIL 'E'

(BRIDGES 1,2,3, AND 6)

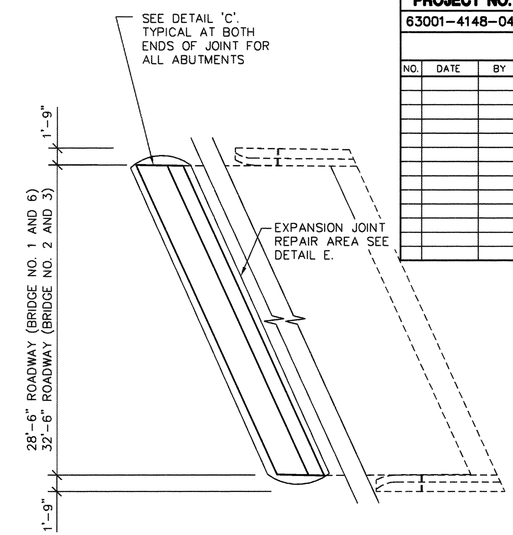

PLAN VIEW OF SKEWED END OF BRIDGE

(FOR SKEW DIRECTION OF BRIDGE NO.'S 1, 2, 3 AND 6 SEE DWG. NO.'S BR-53-31, BR-53-32, AND BR-53-34.) SEE TABLE OF SKEW ANGLES THIS SHEET.

AMIR H. MIRIAN No. 101505 STATE OF TENNESSEE 9/22/01

TEMPERATURE CORRECTION CHART

BRIDGE NO.	OPENING SIZE (IN)					
	90° F	80° F	70° F	60° F	50° F	40° F
63-A281-0.87 (BR #1)	½"	¾"	⅞"	1"	1⅛"	1¼"
63-1880-1.99 (BR #2)	¾"	⅞"	15/16"	1"	1 1/16"	1⅛"
63-1880-1.90 (BR #3)	¾"	⅞"	15/16"	1"	1 1/16"	1⅛"
63-SR237-2.30 (BR #4)	¾"	⅞"	15/16"	1"	1 1/16"	1⅛"
63-SR237-2.19 (BR #5)	¾"	⅞"	15/16"	1"	1 1/16"	1⅛"
63-1882-1.87 (BR #6)	⅝"	¾"	⅞"	1"	1⅛"	1¼"

BRIDGE NO.	BAR LENGTH	TOTAL # REQ'D. (PER JOINT)
63-A281-0.87 (BR #1)	A400E = 32'-2"	7 EA.
63-1880-1.99 (BR #2)	A401E = 37'-2"	7 EA.
63-1880-1.90 (BR #3)	A401E = 37'-2"	7 EA.
63-SR237-2.30 (BR #4)	A402E = 20'-9"	14 EA.
63-SR237-2.19 (BR #5)	A402E = 20'-9"	14 EA.
63-1882-1.87 (BR #6)	A403E = 38'-3"	7 EA.

BRIDGE NO.	SKEW ANGLE	JOINT LENGTH (ALONG THE SKEW)	
		(BEG. OF BRIDGE)	(END OF BRIDGE)
63-A281-0.87 (BR #1)	60.9°	32'-8"	32'-8"
63-1880-1.99 (BR #2)	60°	37'-6"	37'-6"
63-1880-1.90 (BR #3)	60°	37'-6"	37'-6"
63-SR237-2.30 (BR #4)	90°	42'-6"	42'-6"
63-SR237-2.19 (BR #5)	90°	42'-6"	42'-6"
63-1882-1.87 (BR #6)	47.6°	38'-7"	38'-7"

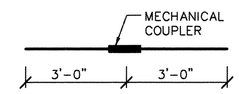

AX500E
BRIDGE NO. 4 – 7 REQUIRED PER JOINT
BRIDGE NO. 5 – 7 REQUIRED PER JOINT

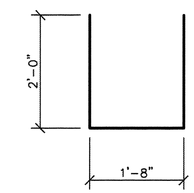

H400E
DIMENSIONS ARE OUT TO OUT

BRIDGE NO. 1 – 20 REQUIRED PER JOINT
BRIDGE NO. 2 & 3 – 23 REQUIRED PER JOINT
BRIDGE NO. 4 & 5 – 60 REQUIRED PER JOINT
BRIDGE NO. 6 – 20 REQUIRED PER JOINT

NOTES:

EXPANSION JOINT REPAIR
INCLUDES FURNISHING ALL MATERIALS AND EQUIPMENT AND COMPLETE INSTALLATION AS SHOWN IN THIS DOCUMENT AND IN ACCORDANCE WITH THE MANUFACTURER'S RECOMMENDATIONS. THE JOINT SEALANT CONSISTS OF A SURFACE PRIMER A SELF LEVELING OR NON-SAG SEALANT AND A BACKER MATERIAL. DETAILED SPECIFICATIONS AND INSTALLATION PROCEDURES SHALL BE SUBMITTED TO THE PROJECT ENGINEER PRIOR TO CONSTRUCTION. THE MANUFACTURER AND THE CONTRACTOR SHALL BE RESPONSIBLE FOR THE WORKMANSHIP AND PERFORMANCE OF THE INSTALLED JOINT.

JOINT SEALANT
THE JOINT SEALANT WILL BE A 100% SILICONE, POURABLE, COLD APPLIED (TWO COMPONENT), RAPID-CURING, SELF LEVELING MATERIAL FROM TDOT QUALIFIED PRODUCT LIST 5, SECTION B. SPECIAL CATEGORY H. PRIOR TO PREPARING THE JOINT SEALANT. THE MANUFACTURER'S REPRESENTATIVE WILL BE CONSULTED TO ESTABLISH THE USABLE POT LIFE OF THE MATERIAL TO BE MIXED CONSIDERING THE AMBIENT TEMPERATURE AT THE TIME OF MIXING. WHEN MIXING HAS BEEN COMPLETED THE AGE OF THE MIXTURE WILL BE TIMED AND THE MATERIAL WILL BE DISCARDED WHEN THE MANUFACTURER'S PREDICTED POT LIFE HAS BEEN EXCEEDED. IF AT ANY TIME DURING THE INSTALLATION OF THE JOINT THE MANUFACTURER'S REPRESENTATIVE DETERMINES THAT THE MIXED JOINT SEALANT HAS CURED TO A POINT WHERE IT CAN NOT BE PROPERLY INSTALLED IT WILL BE DISCARDED.

ADDITIONAL NOTES
EXPANSION GAP WILL CHANGE AT OTHER TEMPERATURES AND THE CONTRACTOR SHALL COMPENSATE FOR THE JOINT MATERIAL IN ACCORDANCE WITH THE MANUFACTURER'S RECOMMENDATION. NO INCREASE IN THE UNIT BID PRICE SHALL BE ALLOWED.

THE DEPTH OF THE JOINT POURED SHALL BE IN ACCORDANCE WITH THE MANUFACTURER'S SPECIFICATIONS FOR THE PROPER INSTALLATION. THE PAVEMENT AND AIR TEMPERATURE SHALL BE 40° F AND RISING AND SHALL NOT FALL BELOW 40° F PRIOR TO COMPLETE CURE OF THE SEALANT.

THE SEALANT THICKNESS PLACED SHALL BE CHECKED PRIOR TO CURING AT A MINIMUM OF THREE LOCATIONS ACROSS A TWELVE FOOT LENGTH OF JOINT TO ASSURE PROPER THICKNESS.

ALL DEBRIS AND MATERIAL SHALL BE REMOVED FOR THE FULL LENGTH AND DEPTH OF THE JOINT OPENING BEFORE PRIMER, BACKER ROD AND SEALANT ARE PLACED.

THE TOP THREE (3") INCHES OF THE JOINT OPENING SHALL BE BLASTCLEANED TO REMOVE LAITNANCE OR OTHER DELETERIOUS MATERIALS BEFORE INSTALLATION OF THE BACKER ROD AND SEALANT.

THE COST OF INSTALLING NEW EXPANSION JOINT: SAW CUTTING, BACKER ROD, NEW JOINT SEALANT, REINFORCING STEEL, HIGH EARLY 18 HOUR CONCRETE, LABOR AND ANY OTHER MISCELLANEOUS MATERIALS NECESSARY TO INSTALL THE NEW EXPANSION JOINT IS TO BE INCLUDED UNDER ITEM NO 604-10.44, EXPANSION JOINT REPAIRS, L.F.

* THE JOINT SYSTEM SHALL BE INSTALLED UNDER DIRECT SUPERVISION OF AN AUTHORIZED TECHNICIAN PROVIDED BY THE EXPANSION JOINT SUPPLIER. FOR EACH JOINT AT EACH BRIDGE AND FOR EACH BRIDGE LOCATION WITHIN THE PROJECT. THE TECHNICIAN MUST APPROVE ALL ASPECTS OF THE GEOMETRY AND PREPARATION, INCLUDING GRINDING AND/OR GROOVING, PRIOR TO ANY JOINT MATERIAL INSTALLATION.

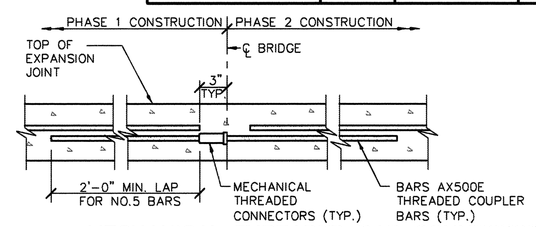

MECHANICAL THREADED BAR CONNECTOR DETAIL

(28 MECHANICAL THREADED CONNECTORS REQ'D.) SHOWING TRANSVERSE REINFORCING STEEL SPLICING WITH MECHANICAL THREADED CONNECTORS.

NOTE:
COST OF MECHANICAL THREADED CONNECTORS TO BE INCLUDED UNDER ITEM NO. 604-10.44, EXPANSION JOINT REPAIRS, LF.

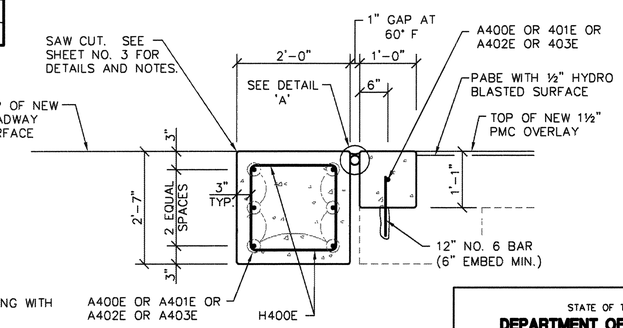

SECTION D-D

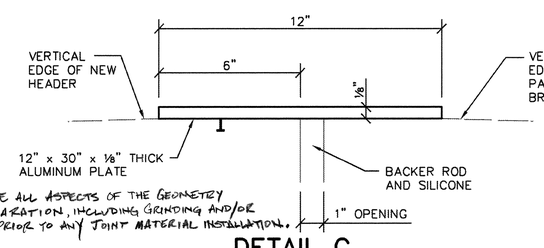

DETAIL C

(NOT REQUIRED AT BRIDGES 4 AND 5)

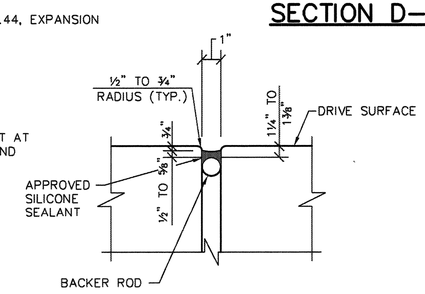

DETAIL 'A'

EXPANSION JOINT DETAILS

TRC INTERNATIONAL, LTD.
CONSULTING ENGINEERS Brentwood, Tennessee 37027
ENG. JOB NO. 01029

DESIGNED BY M.M. NICHOLSON DATE MAY 2001
DRAWN BY J.M. VARRIN, L.C. NIXON DATE MAY 2001
SUPERVISED BY S. RAMANNA, A.H. MIRIAN DATE MAY 2001
CHECKED BY M.M. NICHOLSON DATE MAY 2001

STATE OF TENNESSEE
DEPARTMENT OF TRANSPORTATION

EXPANSION JOINT DETAILS

DURHAM ROAD OVER I-24
TROUGH SPRINGS ROAD OVER I-24(WBL)
TROUGH SPRINGS ROAD OVER I-24(EBL)
ROSSVIEW ROAD OVER I-24(WBL)
ROSSVIEW ROAD OVER I-24(EBL)
DUNLOP ROAD OVER I-24
BRIDGE NO. 63-A281-0.87
BRIDGE NO. 63-1880-1.99
BRIDGE NO. 63-1880-1.90
BRIDGE NO. 63-SR237-2.30
BRIDGE NO. 63-SR237-2.19
BRIDGE NO. 63-1882-1.87
MONTGOMERY COUNTY
2002

BR-53-42