TENNESSEE D.O.T.
DESIGN DIVISION
FILE NO.

Index Of Sheets (Const.)
See Sheet IA

STATE OF TENNESSEE
DEPARTMENT OF TRANSPORTATION
BUREAU OF ENGINEERING

TENN.	YEAR	SHEET NO.
	2014	1
FED. AID PROJ. NO.		
STATE PROJ. NO.	55008-3242-04	

MCNAIRY COUNTY

S.R. 57

BRIDGE AND APPROACHES OVER CYPRESS CREEK @ L.M. 8.25

GRADE, BASE & SURFACE, STRUCTURE, GUARDRAIL, & PVMNT MARKING

CONSTRUCTION

STATE HIGHWAY NO. 57 F.A.H.S. NO. N/A

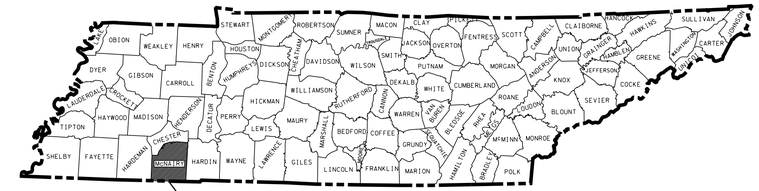

MCNAIRY COUNTY
PROJECT NO. 55008-3242-04

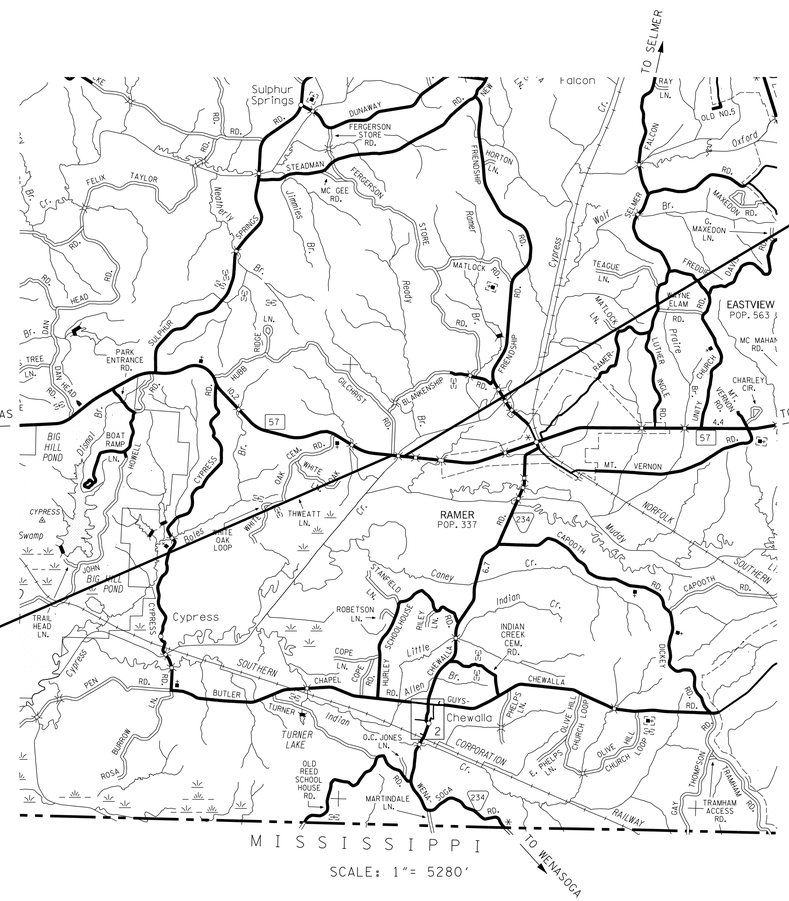

END PROJECT 55008-3242-04 (CONST.)
STA. 28+00.00
N 277461.2849
E 1174324.6820

BEGIN PROJECT 55008-3242-04 (CONST.)
STA. 20+00.00
N 277546.1596
E 11773529.1971

NO EXCLUSIONS
NO EQUATIONS

STAGE CONSTRUCT WITH SIGNALS

SPECIAL NOTES

PROPOSALS MAY BE REJECTED BY THE COMMISSIONER IF ANY OF THE UNIT PRICES CONTAINED THEREIN ARE OBVIOUSLY UNBALANCED, EITHER EXCESSIVE OR BELOW THE REASONABLE COST ANALYSIS VALUE.

THIS PROJECT TO BE CONSTRUCTED UNDER THE STANDARD SPECIFICATIONS OF THE TENNESSEE DEPARTMENT OF TRANSPORTATION DATED MARCH 1, 2006 AND ADDITIONAL SPECIFICATIONS AND SPECIAL PROVISIONS CONTAINED IN THE PLANS AND IN THE PROPOSAL CONTRACT.

TDOT C.E. MANAGER 1 OR
TDOT DESIGN MANAGER 1 M. LAWSON
TDOT ROAD SP. SV. 2 M. LAWSON
DESIGNED BY GARVER, LLC
DESIGNER B.W. STATON CHECKED BY A.J. KHAIRI

P.E. NO. 55008-3242-04

PIN NO. 112369.00

ROADWAY LENGTH	0.094 MILES
BRIDGE LENGTH	0.058 MILES
BOX BRIDGE LENGTH	0.000 MILES
PROJECT LENGTH	0.152 MILES

APPROVED: Paul D. Degges
PAUL D. DEGGES, CHIEF ENGINEER

DATE:

APPROVED:
JOHN SCHROER, COMMISSIONER

UNOFFICIAL SET
NOT FOR BIDDING

U.S. DEPARTMENT OF TRANSPORTATION
FEDERAL HIGHWAY ADMINISTRATION

APPROVED:

DIVISION ADMINISTRATOR DATE

JLHalbrook 8/6/2014 5:08:43 PM
WORKSPACE: TDOT Bridge
\\gltdc01\LTProjects\2010\1001760 - TDOT - Bridge Repair over Cypress Creek\Drawings\SR57-GEN-COVER.dgn

TYPE	YEAR	PROJECT NO.	SHEET NO.
CONST.	2014	55008-3242-04	1A

INDEX

SHEET NAME	SHEET NO.
TITLE SHEET	1
ROADWAY INDEX AND STANDARD DRAWINGS INDEX	1A
PROJECT COMMITMENTS	1B
ESTIMATED BRIDGE QUANTITIES AND BRIDGE INDEX	2
ESTIMATED ROADWAY QUANTITIES	2A
TYPICAL SECTIONS AND PAVING SCHEDULE	2B
GENERAL NOTES AND SPECIAL NOTES	2C-2D
TABULATED QUANTITIES	2E
TRAFFIC CONTROL PLAN – PHASE I AND I I	2F-2G
PRESENT LAYOUT	3
PROPOSED LAYOUT	3A
PROPOSED PROFILE	3B
EROSION PREVENTION AND SEDIMENT CONTROL NOTES	4
EROSION PREVENTION AND SEDIMENT CONTROL PLANS	4A-4C
ADDITIONAL EROSION PREVENTION AND SEDIMENT CONTROL NOTES	4D-4E
ROADWAY CROSS SECTIONS	5-9

STANDARD ROADWAY DRAWINGS

DWG. NO	REV.	DESCRIPTION
ROADWAY DESIGN STANDARDS		
RD-L-5	05-01-08	STANDARD LEGEND FOR EROSION PREVENTION AND SEDIMENT CONTROL
RD01-S-11	04-04-03	DESIGN AND CONSTRUCTION DETAILS FOR ROADSIDE SLOPE DEVELOPMENT
RD01-S-11A	10-15-02	ROADSIDE DITCH DETAILS FOR DESIGN AND CONSTRUCTION
RD01-S-12	08-01-09	CLEAR ZONE CRITERIA
ROADWAY AND PAVEMENT APPURTENANCES		
RP-R-1	05-27-01	STANDARD RAMPS TO SIDE ROADS
SAFETY APPURTENANCES AND FENCE		
S-GR-11	11-26-07	W-BEAM & THRIE BEAM BARRIER RAIL AND RUB RAIL ALTERNATES
S-GR-12	05-27-03	W-BEAM BARRIER POST DETAILS AND SPECIFICATIONS
S-GR-13	05-27-03	BARRIER RAIL MOUNTING, POST BLOCK-OUTS WITH VERTICAL ADJUSTMENT HOLES
S-GR-13A		BARRIER RAIL MOUNTING POST FOR PLASTIC BLOCK-OUTS WITH HORIZONTAL ADJUSTMENT HOLES
S-GR-14	04-17-12	W-BEAM BARRIER FASTENING HARDWARE AND BRIDGE APPROACH DELINEATORS
S-GR-15	06-30-05	W-BEAM BARRIER TERMINAL ELEMENT DETAILS
S-GR-18	05-15-08	GUARDRAIL TERMINAL (TYPE IN-LINE) AND SHOULDER LINE DETAIL
S-GR-19	06-01-09	GUARDRAIL TERMINAL ANCHORS, TYPE 12 AND TYPE 13
S-GR-19C		GUARDRAIL TERMINAL ANCHOR, TYPE 13 ALTERNATE
S-GR-23	09-11-02	GUARDRAIL ATTACHMENT TO STRUCTURES AND PROTECTIVE GUARDRAIL AT BRIDGE END DETAILS
S-GR-24	05-15-08	GUARDRAIL END TERMINALS AT BRIDGE ENDS
S-GR-38	08-16-12	DETAILS FOR CONSTRUCTION OF EARTH PAD FOR TYPE 38 GUARDRAIL END TERMINAL
S-GR-43		TANGENTIAL GUARDRAIL TERMINAL ANCHOR (TYPE 38) POST LAYOUT AND ERECTION DETAILS
S-GR-44		TANGENTIAL GUARDRAIL TERMINAL ANCHOR (TYPE 38) (2 TUBE) GUARDRAIL ELEMENT POST AND ASSEMBLY DETAILS
S-GR-46		CURVED GUARDRAIL
TRAFFIC CONTROL APPURTENANCES		
T-M-1	11-01-11	DETAILS OF PAVEMENT MARKINGS FOR CONVENTIONAL ROADS AND MARKING ABBREVIATIONS
T-WZ-10	04-02-12	ADVANCE ROAD WORK SIGNING ON HIGHWAYS AND FREEWAYS
T-WZ-32	03-03-06	TRAFFIC CONTROL PLAN SIGNAL LAYOUT FOR TRAFFIC SIGNAL AT TWO LANE BRIDGE RECONSTRUCTION SITE
T-WZ-33	05-27-98	TRAFFIC CONTROL PLAN FOR CLOSE INTERSECTION CONDITIONS USING TRAFFIC SIGNAL AT TWO LANE BRIDGE RECONSTRUCTION SITE
T-WZ-34	09-01-05	TRAFFIC CONTROL PLAN GENERAL NOTES FOR TRAFFIC SIGNAL AT TWO LANE BRIDGE RECONSTRUCTION SITE
T-WZ-35	04-02-12	TRAFFIC CONTROL PLAN PAY ITEM AND SIGN DETAILS FOR TRAFFIC SIGNAL AT TWO LANE BRIDGE RECONSTRUCTION SITE
EROSION PREVENTION AND SEDIMENT CONTROL		
EC-STR-2	08-01-12	SEDIMENT FILTER BAGS
EC-STR-3B	08-01-12	SILT FENCE
EC-STR-3C	08-01-12	SILT FENCE WITH WIRE BACKING
EC-STR-3E	04-01-08	SILT FENCE FABRIC JOINING DETAILS
EC-STR-6A	08-01-12	ENHANCED ROCK CHECK DAM
EC-STR-25	08-01-12	TEMPORARY CULVERT CROSSING, CONSTRUCTION EXIT, CONSTRUCTION FORD
EC-STR-37	08-01-12	SEDIMENT TUBE

UNOFFICIAL SET

NOT FOR BIDDING

STATE OF TENNESSEE
DEPARTMENT OF TRANSPORTATION

INDEX AND STANDARD DRAWINGS

GARVER

JLHalbrook 8/6/2014 5:08:44 PM
WORKSPACE: TDOT Bridge
\\glitdc01\LITProjects\2010\00076\0 - TDOT - Bridge Repair over Cypress Creek\Drawings\SR57_GEN_INDEX.dgn

TYPE	YEAR	PROJECT NO.	SHEET NO.
CONST.	2014	55008-3242-04	1B

PROJECT COMMITMENTS

COMMITMENT ID	SOURCE DIVISION	DESCRIPTION	STA./LOCATION
EDHZ001	ENVIRONMENTAL DIVISION, HAZARDOUS MATERIALS	AN ASBESTOS CONTAINING MATERIAL (ACM) SURVEY WAS CONDUCTED ON BRIDGE #55SR0570005, SR57 OVER CYPRESS CREEK, L.M. 8.25, (55-SR57-8.25). NO ACM WAS DETECTED. NO SPECIAL ACCOMMODATIONS FOR DEMOLITION AND WASTE DISPOSAL ARE ANTICIPATED FOR THIS BRIDGE AND THE MATERIAL CAN BE DEPOSITED IN A C&D LANDFILL. PLEASE NOTE THAT EVEN THOUGH THE SAMPLES WERE FOUND TO CONTAIN NO ASBESTOS, THE DEMOLITION CONTRACTOR IS REQUIRED TO SUBMIT THE NATIONAL EMISSION STANDARDS FOR HAZARDOUS AIR POLLUTANTS STANDARD 10-DAY NOTICE OF DEMOLITION TO THE TENNESSEE DIVISION OF AIR POLLUTION CONTROL.	SR57 BRIDGE @ L.M. 8.25 OVER CYPRESS CREEK

UNOFFICIAL SET

NOT FOR BIDDING

STATE OF TENNESSEE
DEPARTMENT OF TRANSPORTATION

PROJECT COMMITMENTS

GARVER

JLHalbrook 8/6/2014 5:09:05 PM
WORKSPACE: TDOT Bridge
L:\2010\0007610 - TDOT - Bridge Repair over Cypress Creek\Drawings\SR57_GEN_PC.dgn

TYPE	YEAR	PROJECT NO.	SHEET NO.
CONST.	2014	55008-3242-04	2

MCNAIRY COUNTY

XXXXX

STATE ROUTE 57
OVER
CYPRESS CREEK
STA.24+29.45
LOG MILE 8.25

CONTINUOUS PRECAST
PRESTRESSED
CONCRETE BOX BEAM
WITH CONCRETE
DECK SLAB

7 SPAN BRIDGE
SPAN NO. 1 = 37'-0"
SPAN NO. 2 = 37'-0"
SPAN NO. 3 = 37'-0"
SPAN NO. 4 = 87'-0"
SPAN NO. 5 = 37'-0"
SPAN NO. 6 = 37'-0"
SPAN NO. 7 = 37'-0"
TOTAL LENGTH = 309'-0"

40'-0" ROADWAY WIDTH
STD-1-1SS BRIDGE RAIL

60°00'00" SKEW

LAYOUT DRAWING
NO. BR-115-73

ESTIMATED BRIDGE QUANTITIES

ITEM NO.	DESCRIPTION	QUANTITY	UNIT
202-04.01	REMOVAL OF STRUCTURES (EXT.BR.NO.55-SR57-8.25)	1	L.S.
204-02.01	DRY EXCAVATION (BRIDGES)	110	C.Y.
303-01.02	GRANULAR BACKFILL (BRIDGES)	100	TON
604-02.03	EPOXY COATED REINFORCING STEEL	115,649	LB.
604-03.01	CLASS "A" CONCRETE (BRIDGES)	232	C.Y.
604-03.02	STEEL BAR REINFORCEMENT (BRIDGES)	32,995	LB.
604-03.04	PAVEMENT AT BRIDGE ENDS	204	S.Y.
604-03.09	CLASS "D" CONCRETE (BRIDGE DECK)	403	C.Y.
604-04.01	APPLIED TEXTURE FINISH (NEW STRUCTURES)	1,036	S.Y.
604-04.03	BRIDGE END DRAINS	4	EA.
604-05.31	BRIDGE DECK GROOVING (MECHANICAL)	1,461	S.Y.
606-10.01	TEST PILES (PRECAST CONCRETE) SIZE 2	330	L.F.
606-10.02	LOADING TEST (PRECAST CONCRETE) SIZE 2	2	EA
606-10.03	PRECAST CONCRETE PILES (SIZE 2)	1,780	L.F.
606-12.01	PILE ANCHORAGE SYSTEM (SEISMIC)	46	EA.
606-20.10	TEST PILES (STEEL PIPE PILES, 30-INCH)	120	L.F.
606-20.20	LOADING TEST (STEEL PIPE PILES, 30-INCH)	1	EA.
606-20.30	STEEL PIPE PILES (30-INCH)	600	L.F.
606-20.60	PILE TIPS-STEEL PIPE PILES (30-INCH)	14	EA.
615-02.19	PRESTRESSED CONCRETE BOX BEAM (24"X36")	1,051	L.F.
615-02.25	PRESTRESSED CONCRETE BOX BEAM (39"X48")	427	L.F.
617-02	BRIDGE DECK CRACKING SEAL	357	L.F.
617-05	SEALANT (HMWM)	4	GAL.
620-05.01	CONCRETE PARAPET SINGLE SLOPE (STD-1-1SS)	676	L.F.
710-09.01	6" PERFORATED PIPE WITH VERTICAL DRAIN SYSTEM	130	L.F.
710-09.02	6" PIPE UNDERDRAIN	48	L.F.

LIST OF STANDARD DRAWINGS	DWG. NO.	LAST REV. DATE
BRIDGE RAILING SINGLE SLOPE CONCRETE PARAPET	STD-1-1SS	06-01-11
PAVEMENT AT BRIDGE ENDS	STD-1-5	06-01-11
BRIDGE END DRAIN W/PABE	STD-1-6	04-28-97
BRIDGE END DRAIN W/PABE	STD-1-7	08-24-11
BRIDGE END DRAIN 2' X 8'-7" W/PABE	STD-1-8	05-01-95
BRIDGE MOUNTED INTERCONNECTED PORTABLE BARRIER RAIL	STD-2-1	11-01-10
STD. PRECAST PRESTRESSED BRIDGE DECK PANELS GENERAL DETAILS	STD-4-1	04-08-05
STD. PRECAST PRESTRESSED BRIDGE DECK PANELS DESIGN CRITERIA	STD-4-2	04-08-05
STD. PRECAST PRESTRESSED BRIDGE DECK PANELS GENERAL DETAILS	STD-4-3	03-02-02
STD. PRECAST PRESTRESSED BRIDGE DECK PANELS CONSTRUCTION DETAILS	STD-4-4	06-10-96
STD. PILE DETAILS	STD-5-1	10-25-93
STD. SEISMIC DETAILS	STD-6-1	11-01-10
REINFORCING BAR SUPPORT DETAILS FOR CONCRETE SLABS	STD-9-1	10-07-08
MISCELLANEOUS ABUTMENT AND DRAINAGE DETAILS	STD-10-1	04-08-05
STD. DETAILS FOR PRESTRESSED BOX BEAMS	STD-14-3	10-15-08

LIST OF DRAWINGS	DWG. NO.	LAST REV. DATE
LAYOUT OF BRIDGE	BR-115-73	
GENERAL NOTES AND ESTIMATED QUANTITIES	BR-115-74	
FOUNDATION DATA	BR-115-75	
SEQUENCE OF CONSTRUCTION	BR-115-76	
SEQUENCE OF CONSTRUCTION	BR-115-77	
SEQUENCE OF CONSTRUCTION	BR-115-78	
SUPERSTRUCTURE	BR-115-79	
SUPERSTRUCTURE	BR-115-80	
SUPERSTRUCTURE DETAILS	BR-115-81	
SUPERSTRUCTURE DETAILS	BR-115-82	
SUPERSTRUCTURE DETAILS	BR-115-83	
SUPERSTRUCTURE DETAILS	BR-115-84	
PRESTRESSED BOX BEAM DETAILS	BR-115-85	
PRESTRESSED BOX BEAM DETAILS	BR-115-86	
ABUTMENT NO. 1	BR-115-87	
ABUTMENT NO. 1 DETAILS	BR-115-88	
ABUTMENT NO. 2	BR-115-89	
ABUTMENT NO. 2 DETAILS	BR-115-90	
BENT NOS. 1, 2, 5 & 6	BR-115-91	
BENT NOS. 1, 2, 5 & 6 DETAILS	BR-115-92	
BENT NO 3	BR-115-93	
BENT NO. 4	BR-115-94	
BENT NOS. 3 & 4 DETAILS	BR-115-95	
PIPE PILE DETAILS	BR-115-96	
FINAL FOUNDATION DATA	BR-115-97	
BILL OF STEEL	BR-115-98	
BILL OF STEEL	BR-115-99	

LIST OF SPECIAL PROVISIONS	DWG. NO.	LAST REV. DATE
REPAIR OF BRIDGE DECK CRACKS	604	02-19-96

UNOFFICIAL SET

NOT FOR BIDDING

STATE OF TENNESSEE
DEPARTMENT OF TRANSPORTATION

ESTIMATED BRIDGE QUANTITIES

GARVER

JLHalbrook 8/6/2014 5:09:06 PM
WORKSPACE: TDOT Bridge
\\gltdc01\LiTProjects\2010\10017610 - TDOT - Bridge Repair over Cypress Creek\Drawings\SR57_GEN_EB0.dgn

TYPE	YEAR	PROJECT NO.	SHEET NO.
CONST.	2014	55008-3242-04	2A

ESTIMATED ROADWAY QUANTITIES

	ITEM NO.	DESCRIPTION	UNIT	QUANTITY
	105-01	CONSTRUCTION STAKES, LINES AND GRADES	LS	1
	201-01	CLEARING AND GRUBBING	LS	1
	203-01	ROAD & DRAINAGE EXCAVATION (UNCLASSIFIED)	C.Y.	349
	203-03	BORROW EXCAVATION (UNCLASSIFIED)	C.Y.	4341
	203-06	WATER	M.G.	22
7	203-50	CONSTRUCTION OF HAUL ROAD	LS	1
1 2	209-05	SEDIMENT REMOVAL	C.Y.	13
1 2	209-08.02	TEMPORARY SILT FENCE (WITH BACKING)	L.F.	3027
1 2 4	209-08.03	TEMPORARY SILT FENCE (WITHOUT BACKING)	L.F.	500
1 2	209-08.08	ENHANCED ROCK CHECK DAM	EACH	2
2 4	209-09.04	SEDIMENT FILTER BAG(15' X 10')	EACH	8
	303-01	MINERAL AGGREGATE, TYPE A BASE, GRADING D	TON	1502
2 4	303-10.01	MINERAL AGGREGATE (SIZE 57)	TON	600
	307-01.01	ASPHALT CONCRETE MIX (PG64-22) (BPMB-HM) GRADING A	TON	203
	307-01.08	ASPHALT CONCRETE MIX (PG64-22) (BPMB-HM) GRADING B-M2	TON	191
	402-01	BITUMINOUS MATERIAL FOR PRIME COAT (PC)	TON	2
	402-02	AGGREGATE FOR COVER MATERIAL (PC)	TON	7
6	403-01	BITUMINOUS MATERIAL FOR TACK COAT (TC)	TON	1
	411-01.10	ACS MIX(PG64-22) GRADING D	TON	161
5	606-24.10	SHEET PILES	S.F.	2625
	705-01.01	GUARDRAIL AT BRIDGE ENDS	L.F.	108
	705-02.02	SINGLE GUARDRAIL (TYPE 2)	L.F.	100
	705-04.03	GUARDRAIL TERMINAL (TYPE 13)	EACH	1
	705-04.07	TAN ENERGY ABSORBING TERM (NCHRP 350, TL3)	EACH	3
	705-04.50	PORTABLE BARRIER RAIL DELINEATOR	EACH	108
3	705-08.51	PORTABLE IMPACT ATTENUATOR NCHRP350 TL-3	EACH	2
4	709-05.05	MACHINED RIP-RAP (CLASS A-3)	TON	180
	709-05.08	MACHINED RIP-RAP (CLASS B)	TON	1564
	712-01	TRAFFIC CONTROL	LS	1
	712-02.02	INTERCONNECTED PORTABLE BARRIER RAIL	L.F.	1300
	712-04.01	FLEXIBLE DRUMS (CHANNELIZING)	EACH	30
	712-06	SIGNS (CONSTRUCTION)	S.F.	428
	712-07.03	TEMPORARY BARRICADES (TYPE III)	L.F.	12
	712-09.01	REMOVABLE PAVEMENT MARKING LINE	L.F.	3149
	712-09.04	REMOVABLE PAVEMENT MARKING (STOP LINE)	L.F.	36
	716-13.06	SPRAY THERMO PVMT MRKNG (40 mil) (4IN LINE)	L.M.	0.76
	717-01	MOBILIZATION	LS	1
	730-40	TEMPORARY TRAFFIC SIGNAL SYSTEM	EACH	3
4	740-10.03	GEOTEXTILE (TYPE III) (EROSION CONTROL)	S.Y.	1200
4 6	740-11.03	TEMPORARY SEDIMENT TUBE 18IN	L.F.	3400
	801-03	WATER (SEEDING & SODDING)	M.G.	37
	803-01	SODDING (NEW SOD)	S.Y.	3700

FOOTNOTES

1. SEE SUBSECTION 209.07 OF THE STANDARD SPECIFICATIONS FOR MAINTENANCE REPLACEMENT.
2. ALL QUANTITIES ARE TO BE USED AS DIRECTED BY THE ENGINEER.
3. THIS ITEM SHALL BE A PORTABLE ENERGY ABSORBING TERMINAL MEETING THE REQUIREMENTS OF NCHRP 350 FOR TEST LEVEL 3. EXAMPLES WOULD BE A QUAD-GUARD, A REACT 350 OR A TRACC. THE PAY ITEM WILL INCLUDE FURNISHING AND INSTALLING ALL COMPONENTS AS SHOWN ON THE MANUFACTURER $^{5}/_{32}$S DRAWING.
4. ALL EROSION PREVENTION AND SEDIMENT CONTROL QUANTITY MAY INCREASE OR DECREASE AS DIRECTED BY THE ENGINEER.
5. INCLUDES THE COST OF ALL EQUIPMENT, LABOR AND MATERIALS TO HAUL AND DRIVE NEW PZ35 SHEET PILING FROM STA. 22+00.00 TO STA. 22+75.00 AS SHOWN ON DWG. NO. BR-115-73. THE NEW SHEET PILING SHALL RECEIVE A COAL TAR EPOXY COATING, 4" DIA. WEEP HOLES SHALL BE PROVIDED @ 6' O.C. AT A DISTANCE OF 6" FROM TOP OF THE ORIGINAL GROUND LINE. THE SHEET PILING SHALL BE AASHTO M270 GRADE 50 STEEL. THE NEW SHEET PILING SHALL BE DRIVEN TO A MINIMUM DEPTH OF 30'-0" FEET BELOW THE ORIGINAL GROUND LINE. THE FILL HEIGHT BEHIND THE SHEET PILES SHALL NOT EXCEED 5'-0". ALL WORK MUST MEET THE FULL APPROVAL OF THE ENGINEER. ALL THE SHEET PILING TO REMAIN IN PLACE AFTER CONSTRUCTION IS COMPLETED.
6. THIS ITEM SHALL CAN BE USED IN LIEU OF TEMPORARY SILT FENCE WITH BACKING AT THE DISCRETION OF THE ENGINEER. SEE STD. DWG. NO. EC-STR-37 FOR ADDITIONAL NOTES AND DETAILS.
7. INCLUDES ALL COSTS OF LABOR AND MATERIAL ASSOCIATED WITH HAULING, PLACING, AND COMPACTING APPROVED MATERIAL FOR HAUL ROAD PLACEMENT AS SHOWN ON SHEET NO. 3. THIS ITEM WILL ALSO INCLUDE ALL COSTS ASSOCIATED WITH REMOVING AND DISPOSING THE LISTED MATERIAL AFTER THE COMPLETION OF WORK. ALL WORK MUST MEET THE FULL APPROVAL OF THE ENGINEER.

UNOFFICIAL SET

NOT FOR BIDDING

STATE OF TENNESSEE
COMMISSIONER
NO. 106650

STATE OF TENNESSEE
DEPARTMENT OF TRANSPORTATION

ESTIMATED ROADWAY QUANTITIES

GARVER

JLHolbrook 8/6/2014 5:09:06 PM
WORKSPACE: TDOT Bridge
\\gltdc01\LTProjects\2010\10017610 - TDOT - Bridge Repair over Cypress Creek\Drawings\SR57_GEN_ERQ.dgn

TYPE	YEAR	PROJECT NO.	SHEET NO.
CONST.	2014	55008-3242-04	2B

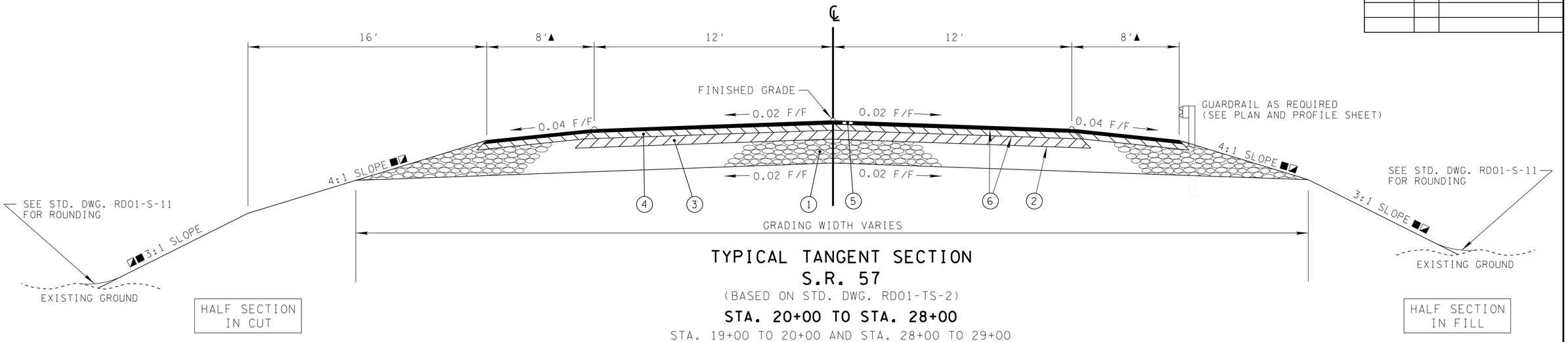

TYPICAL TANGENT SECTION
S.R. 57

(BASED ON STD. DWG. RD01-TS-2)

STA. 20+00 TO STA. 28+00

STA. 19+00 TO 20+00 AND STA. 28+00 TO 29+00
WILL BE PAVED WITH 1 ¼" OVERLAY ONLY.

▲ SEE PROPOSED LAYOUT FOR TRANSITION WIDTHS
■ SEE CROSS SECTIONS FOR VARYING SLOPES
◪ AREA TO BE SODDED AFTER COMPLETION OF BRIDGE CONSTRUCTION

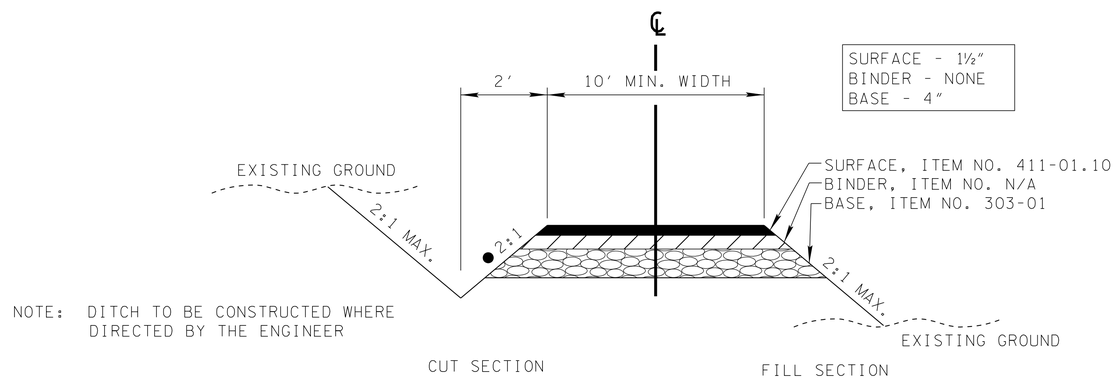

NOTE: DITCH TO BE CONSTRUCTED WHERE DIRECTED BY THE ENGINEER

TYPICAL SECTION
PRIVATE DRIVE &
FIELD ENTRANCE

● 20:1 WHEN GUARDRAIL IS ADJACENT TO DRIVE

PROPOSED PAVEMENT SCHEDULE

(1) **MINERAL AGGREGATE BASE @ 8"± THICK (11"± THICK @ SHOULDERS)** ITEM 303-01 MINERAL AGGREGATE, TYPE "A" BASE, GRADING "D"	(4) **BITUMINOUS COURSE (BINDER) @ 2"± THICK (APPROX. 226.0 LBS./S.Y.)** ITEM 307-01.08 ASPHALT CONCRETE MIX (PG64-22)(BPMB-HM) GRADING "B-M2"
(2) **PRIME COAT** ITEM 402-01 BITUMINOUS MATERIAL FOR PRIME COAT (PC) (@ 0.30-0.35 GAL./SQ.YD.) ITEM 402-02 AGGREGATE FOR COVER MATERIAL (PC) (@ 8-12 LB/SQ.YD.)	(5) **ASPHALTIC CONCRETE SURFACE (ACS) @ 1.25"± THICK (APPROX. 132.5 LBS./S.Y.)** ITEM 411-01.10 ACS MIX (PG64-22) GRADING "D"
(3) **BITUMINOUS BASE COURSE (BLACK BASE) @ 3"± THICK (APPROX. 345.0 LBS./S.Y.)** ITEM 307-01.01 ASPHALT CONCRETE MIX (PG64-22)(BPMB-HM) GRADING "A"	(6) **TACK COAT** ITEM 403-01 BITUMINOUS MATERIAL FOR TACK COAT (TC) (@ 0.07 GAL./SQ.YD.)

UNOFFICIAL SET

NOT FOR BIDDING

STATE OF TENNESSEE
DEPARTMENT OF TRANSPORTATION

TYPICAL SECTIONS AND PAVEMENT SCHEDULE

GARVER

JLHolbrook 8/6/2014 5:09:12 PM
WORKSPACE: TDOT Bridge
\\gltdc01\LITProjects\2010\10017610 - TDOT - Bridge Repair over Cypress Creek\Drawings\SR57_TYP_ALL.dgn

TYPE	YEAR	PROJECT NO.	SHEET NO.
CONST.	2014	55008-3242-04	2C

GENERAL NOTES

GRADING

(1) ANY AREA THAT IS DISTURBED OUTSIDE LIMITS OF CONSTRUCTION DURING THE LIFE OF THIS PROJECT SHALL BE REPAIRED BY THE CONTRACTOR AT HIS EXPENSE.

(2) CERTIFICATION FOR ALL BORROW PITS MUST BE OBTAINED IN ACCORDANCE WITH SUBSECTION 107.06 OF THE STANDARD SPECIFICATIONS.

(3) THE CONTRACTOR SHALL NOT DISPOSE OF ANY MATERIAL EITHER ON OR OFF STATE-OWNED R.O.W. IN A REGULATORY FLOOD WAY AS DEFINED BY THE FEDERAL EMERGENCY MANAGEMENT AGENCY WITHOUT APPROVAL BY SAME. ALL MATERIAL SHALL BE DISPOSED OF IN UPLAND (NON-WETLAND) AREAS AND ABOVE ORDINARY HIGH WATER OF ANY ADJACENT WATERCOURSE. THIS DOES NOT ELIMINATE THE NEED TO OBTAIN ANY OTHER LICENSES OR PERMITS THAT MAY BE REQUIRED BY ANY OTHER FEDERAL, STATE OR LOCAL AGENCY.

SEEDING AND SODDING

(4) SOD SHALL BE PLACED AT LOCATIONS SHOWN ON THE PLANS TO PREVENT DAMAGE TO ADJACENT FACILITIES AND PROPERTY DUE TO EROSION ON ALL NEWLY GRADED CUT AND FILL SLOPES AS WORK PROGRESSES.

GUARDRAIL

(5) IF ANY APPROACH END OF A SECTION OF GUARDRAIL OR BRIDGE RAIL MUST TEMPORARILY BE LEFT INCOMPLETE AND EXPOSED TO TRAFFIC, THE CONTRACTOR SHALL USE TWO (2) TEMPORARY BARRICADES OR DRUMS WITH TYPE A LIGHTS AND ROUNDED END ELEMENTS AS MINIMUM MEASURES TO PROTECT TRAFFIC FROM THE HAZARD OF AN EXPOSED END. ALL COST OF FURNISHING AND INSTALLING A TEMPORARY ROUNDED END ELEMENT SHALL BE INCLUDED IN THE COST OF THE PROPOSED GUARDRAIL.

DRAINAGE

(6) THE CONTRACTOR SHALL SHAPE DITCHES TO THE SPECIFIED DESIGN. THIS WORK WILL NOT BE MEASURED AND PAID FOR DIRECTLY, BUT THE COST WILL BE INCLUDED IN THE COST OF OTHER ITEMS.

(7) THE CUTTING OF INLET AND OUTLET DITCHES WHERE SHOWN ON PLANS OR AS DIRECTED BY THE ENGINEER WILL BE MEASURED AND PAID FOR AS ITEM NO. 203-01 ROAD AND DRAINAGE EXCAVATION (UNCLASSIFIED).

UTILIITES

(8) THE LOCATIONS OF UTILITIES SHOWN WITHIN THESE PLANS ARE APPROXIMATE ONLY. EXACT LOCATIONS SHALL BE DETERMINED IN THE FIELD BY CONTACTING THE UTILITY COMPANIES INVOLVED. NOTIFICATION BY CALLING THE TENNESSEE ONE CALL SYSTEM, INC., AT 1-800-351-1111 AS REQUIRED BY TCA 65-31-106 WILL BE REQUIRED.

(9) THE CONTRACTOR WILL PROVIDE ALL NECESSARY PROTECTIVE MEASURES TO SAFEGUARD EXISTING UTILITIES FROM DAMAGE DURING CONSTRUCTION OF THIS PROJECT. IN THE EVENT THAT SPECIAL EQUIPMENT IS REQUIRED TO WORK OVER AND AROUND THE UTILITIES, THE CONTRACTOR WILL BE REQUIRED TO FURNISH SUCH EQUIPMENT. THE COST OF PROTECTING UTILITIES FROM DAMAGE AND FURNISHING SPECIAL EQUIPMENT WILL BE INCLUDED IN THE PRICE BID FOR OTHER ITEMS OF CONSTRUCTION.

(10) THE CONTRACTOR SHALL NOTIFY EACH INDIVIDUAL UTILITY OWNER OF HIS PLAN OF OPERATION IN THE AREA OF THE UTILITIES. PRIOR TO COMMENCING WORK, THE CONTRACTOR SHALL CONTACT THE UTILITY OWNERS AND REQUEST THEM TO PROPERLY LOCATE THEIR RESPECTIVE UTILITY ON THE GROUND. THIS NOTIFICATION SHALL BE GIVEN AT LEAST THREE (3) BUSINESS DAYS PRIOR TO COMMENCEMENT OF OPERATIONS AROUND THE UTILITY IN ACCORDANCE WITH TCA 65-31-106.

MISCELLANEOUS

(11) NOTHING IN THE GENERAL NOTES OR SPECIAL PROVISIONS SHALL RELIEVE THE CONTRACTOR FROM HIS RESPONSIBILITIES TOWARD THE SAFETY AND CONVENIENCE OF THE GENERAL PUBLIC AND THE RESIDENTS ALONG THE PROPOSED CONSTRUCTION AREA.

PAVEMENT MARKINGS

(12) PERMANENT PAVEMENT LINE MARKINGS SHALL BE 4" SPRAY THERMOPLASTIC (40 mil) INSTALLED TO PERMANENT STANDARDS AT THE END OF EACH DAY'S WORK. SHORT UNMARKED SECTIONS SHALL NOT BE ALLOWED. PAVEMENT MARKINGS WILL BE MEASURED AND PAID FOR UNDER ITEM NO. 716-13.06, SPRAY THERMO PVMT MRKNG (40 mil) (4IN LINE), L.M. THE CONTRACTOR SHALL HAVE THE OPTION OF USING REFLECTORIZED PAINT INSTALLED TO PERMANENT STANDARDS AT THE END OF EACH DAY'S WORK AND THEN INSTALLING THE PERMANENT MARKINGS AFTER THE PAVING OPERATION IS COMPLETED. THE TEMPORARY MARKINGS FOR THE FINAL SURFACE WILL NOT BE MEASURED AND PAID FOR DIRECTLY, BUT THE COSTS ARE TO BE INCLUDED IN THE PRICE BID FOR THE PERMANENT MARKINGS.

PAVEMENT

PAVING

(13) THE CONTRACTOR SHALL BE REQUIRED TO PAVE IN THE DIRECTION OF TRAFFIC.

(14) THE CONTRACTOR SHALL BE REQUIRED TO COLD PLANE AND PAVE IN THE DIRECTION OF TRAFFIC.

CONSTRUCTION WORK ZONE & TRAFFIC CONTROL

(15) ADVANCED WARNING SIGNS SHALL NOT BE DISPLAYED MORE THAN FORTY-EIGHT (48) HOURS BEFORE PHYSICAL CONSTRUCTION BEGINS. SIGNS MAY BE ERECTED UP TO ONE WEEK BEFORE NEEDED, IF THE SIGN FACE IS FULLY COVERED.

(16) IF THE CONTRACTOR MOVES OFF THE PROJECT, HE SHALL COVER OR REMOVE ALL UNNEEDED SIGNS AS DIRECTED BY THE ENGINEER. COSTS OF REMOVAL, COVERING, AND REINSTALLING SIGNS SHALL NOT BE MEASURED AND PAID FOR SEPARATELY, BUT ALL COSTS SHALL BE INCLUDED IN THE ORIGINAL UNIT PRICE BID FOR ITEM NO 712-06, SIGNS (CONSTRUCTION) PER SQUARE FOOT.

(17) A LONG TERM BUT SPORADIC USE WARNING SIGN, SUCH AS A FLAGGER SIGN, MAY REMAIN IN PLACE WHEN NOT REQUIRED PROVIDED THE SIGN FACE IS FULLY COVERED.

(18) TRAFFIC CONTROL DEVICES SHALL NOT BE DISPLAYED OR ERECTED UNLESS RELATED CONDITIONS ARE PRESENT NECESSITATING WARNING.

(19) USE OF BARRICADES, PORTABLE BARRIER RAILS, VERTICAL PANELS, AND DRUMS SHALL BE LIMITED TO THE IMMEDIATE AREAS OF CONSTRUCTION WHERE A HAZARD IS PRESENT. THESE DEVICES SHALL NOT BE STORED ALONG THE ROADWAY WITHIN THIRTY (30) FEET OF THE EDGE OF THE TRAVELED WAY BEFORE OR AFTER USE UNLESS PROTECTED BY GUARDRAIL, BRIDGE RAIL, AND/OR BARRIERS INSTALLED FOR OTHER PURPOSES FOR ROADWAYS WITH CURRENT ADT'S LESS THAN 1500 AND DESIGN SPEED OF LESS THAN 60 MPH. THIS DISTANCE SHALL INCREASE TO FORTY-FIVE (45) FEET FOR ROADWAYS WITH CURRENT ADT'S OF 1500 OR GREATER AND DESIGN SPEED OF 60 MPH OR GREATER OR ON THE OUTSIDE OF A HORIZONTAL CURVE. THESE DEVICES SHALL BE REMOVED FROM THE CONSTRUCTION WORK ZONE WHEN THE ENGINEER DETERMINES THEY ARE NO LONGER NEEDED. WHERE THERE IS INSUFFICIENT RIGHT-OF-WAY TO PROVIDE FOR THIS REQUIRED SETBACK, THE CONTRACTOR SHALL DETERMINE THE ALTERNATE LOCATIONS AND REQUEST THE ENGINEER'S APPROVAL TO USE THEM.

(20) THE CONTRACTOR SHALL NOT BE PERMITTED TO PARK ANY VEHICLES OR CONSTRUCTION EQUIPMENT DURING PERIODS OF INACTIVITY, WITHIN THIRTY (30) FEET OF THE EDGE OF PAVEMENT WHEN THE LANE IS OPEN TO TRAFFIC UNLESS PROTECTED BY GUARDRAIL, BRIDGE RAIL, AND/OR BARRIERS INSTALLED FOR OTHER PURPOSES FOR ROADWAYS WITH CURRENT ADT'S LESS THAN 1500 AND DESIGN SPEED OF LESS THAN 60 MPH. THIS DISTANCE SHALL BE INCREASED TO FORTY-FIVE (45) FEET FOR ROADWAYS WITH CURRENT ADT'S OF 1500 OR GREATER AND DESIGN SPEED OF 60 MPH OR GREATER OR ON THE OUTSIDE OF A HORIZONTAL CURVE. PRIVATELY OWNED VEHICLES SHALL NOT BE ALLOWED TO PARK WITHIN THIRTY (30) FEET OF A OPEN TRAFFIC LANE AT ANY TIME UNLESS PROTECTED AS DESCRIBED ABOVE FOR ROADWAYS WITH CURRENT ADT'S LESS THAN 1500 AND DESIGN SPEED OF LESS THAN 60 MPH. THIS DISTANCE SHALL BE INCREASED TO FORTY-FIVE (45) FEET FOR ROADWAYS WITH CURRENT ADT'S OF 1500 OR GREATER AND DESIGN SPEED OF 60 MPH OR GREATER OR ON THE OUTSIDE OF A HORIZONTAL CURVE. WHERE THERE IS INSUFFICIENT RIGHT-OF-WAY TO PROVIDE FOR THIS REQUIRED SETBACK, THE CONTRACTOR SHALL DETERMINE THE ALTERNATE LOCATIONS AND REQUEST THE ENGINEER'S APPROVAL TO USE THEM.

EROSION PREVENTION AND SEDIMENT CONTROL

DISTURBED AREA

(21) AREAS TO BE UNDISTURBED SHALL BE CLEARLY MARKED IN THE FIELD BEFORE CONSTRUCTION ACTIVITIES BEGIN. THE TOTAL AREA TO BE DISTURBED NOT INCLUDING EXCLUSIVE BORROW/WASTE AREAS AND STAGING AREAS IS LESS THAN 1 (ONE) ACRE. IF THE TOTAL DISTURBED AREA FOR THE PROJECT SITE (INCLUDING STAGING AND EXCLUSIVE WASTE/BORROW AREAS) INCREASES TO MORE THAN 1 (ONE) ACRE, THEN THE NATURAL RESOURCES OFFICE OF THE ENVIRONMENTAL DIVISION MUST BE NOTIFIED SO THAT A SWPPP CAN BE PREPARED.

(22) PRE-CONSTRUCTION VEGETATIVE GROUND COVER SHALL NOT BE DESTROYED, REMOVED OR DISTURBED (I.E. CLEARING AND GRUBBING INITIATED) MORE THAN 15 CALENDAR DAYS PRIOR TO GRADING OR EARTH MOVING ACTIVITIES UNLESS THE AREA IS MULCHED, SEEDED WITH MULCH, OR OTHER TEMPORARY COVER IS INSTALLED.

(23) CLEARING, GRUBBING, AND OTHER DISTURBANCE TO RIPARIAN VEGETATION SHALL BE LIMITED TO THE MINIMUM NECESSARY FOR SLOPE CONSTRUCTION AND EQUIPMENT OPERATIONS. EXISTING VEGETATION SHOULD BE PRESERVED TO THE MAXIMUM EXTENT POSSIBLE. UNNECESSARY VEGETATION REMOVAL IS PROHIBITED.

(24) ALL DISTURBED AREAS SHALL BE PROPERLY STABILIZED AS SOON AS PRACTICABLE. PRIORITY SHALL BE GIVEN TO FINISHING OPERATIONS AND PERMANENT EPSC MEASURES OVER TEMPORARY EPSC MEASURES ON ALL PROJECTS.

(25) CONSTRUCTION SHALL BE SEQUENCED AND STAGED TO MINIMIZE THE EXPOSURE TIME OF GRADED OR DENUDED SOIL AREAS, PRESERVE TOPSOIL, AND MINIMIZE SOIL COMPACTION.

SEDIMENT CONTROL

(26) EPSC MEASURES SHALL BE INSTALLED AND FUNCTIONAL PRIOR TO ANY EARTH MOVING OPERATIONS, AND SHALL BE MAINTAINED THROUGHOUT THE CONSTRUCTION PERIOD.

(27) THE CONTRACTOR SHALL ESTABLISH AND MAINTAIN A PROACTIVE METHOD TO PREVENT THE OFF-SITE MIGRATION OR DEPOSIT OF SEDIMENT ON ROADWAYS USED BY THE GENERAL PUBLIC. IF SEDIMENT ESCAPES THE CONSTRUCTION SITE, OFF-SITE ACCUMULATIONS OF SEDIMENT THAT HAVE NOT REACHED A STREAM MUST BE REMOVED AT A FREQUENCY SUFFICIENT TO MINIMIZE OFF-SITE IMPACTS (E.G., FUGITIVE SEDIMENT THAT HAS ESCAPED THE CONSTRUCTION SITE AND HAS COLLECTED IN A STREET MUST BE REMOVED SO THAT IT IS NOT SUBSEQUENTLY WASHED INTO STORM SEWERS AND STREAMS BY THE NEXT RAIN AND/OR SO THAT IT DOES NOT POSE A SAFETY HAZARD TO USERS OF PUBLIC STREETS). ARRANGEMENTS CONCERNING REMOVAL OF SEDIMENT ON ADJOINING PROPERTY MUST BE SETTLED WITH THE ADJOINING PROPERTY OWNER BEFORE REMOVAL OF SEDIMENT.

(28) WATER PUMPED FROM WORK AREAS AND EXCAVATION MUST BE HELD IN SETTLING BASINS OR TREATED BY FILTRATION OR CHEMICAL TREATMENT PRIOR TO ITS DISCHARGE INTO SURFACE WATERS. ALL PHYSICAL AND/OR CHEMICAL TREATMENT WILL BE APPLIED IN ACCORDANCE WITH MANUFACTURER'S GUIDELINES AND FULLY DESCRIBED IN THE EPSC PLANS. WATER MUST BE HELD IN SETTLING BASINS UNTIL AT LEAST AS CLEAR AS THE RECEIVING WATERS. SETTLING BASINS SHALL NOT BE LOCATED CLOSER THAN 20 FEET FROM THE TOP BANK OF A STREAM. SETTLING BASINS AND SEDIMENT TRAPS SHALL BE PROPERLY DESIGNED ACCORDING TO THE SIZE OF THE DRAINAGE AREAS OR VOLUME OF WATER TO BE TREATED. TREATED WATER MUST BE DISCHARGED THROUGH A PIPE OR WELL- VEGETATED OR LINED CHANNEL, SO THAT THE DISCHARGE DOES NOT CAUSE EROSION OR SEDIMENT TRANSPORT. DISCHARGES FROM BASINS AND IMPOUNDMENTS SHALL UTILIZE OUTLET STRUCTURES THAT ONLY WITHDRAW WATER FROM NEAR THE SURFACE OF THE BASIN OR IMPOUNDMENT. DISCHARGES MUST NOT CAUSE AN OBJECTIONABLE COLOR CONTRAST WITH THE RECEIVING STREAM.

(29) CHECK DAMS SHALL BE USED WHERE RUNOFF IS CONCENTRATED. CLEAN ROCK, BRUSH, GABION, OR SANDBAG CHECK DAMS SHALL BE PROPERLY CONSTRUCTED TO REDUCE VELOCITY AND CONTROL EROSION.

(30) IF PERMANENT OR TEMPORARY VEGETATION IS TO BE USED AS AN EPSC MEASURE, THEN THE TIMING OF PLANTING OF VEGETATION SHALL BE SHOWN IN THE SWPPP. DELAYING PLANTING OF COVER VEGETATION UNTIL WINTER MONTHS OR DRY MONTHS SHOULD BE AVOIDED, IF POSSIBLE.

(31) OFFSITE VEHICLE TRACKING OF SEDIMENTS AND THE GENERATION OF DUST SHALL BE MINIMIZED. A STABILIZED CONSTRUCTION ACCESS (A POINT OF ENTRANCE/EXIT TO THE CONSTRUCTION PROJECT) SHALL BE PROVIDED, AS NEEDED, TO REDUCE THE TRACKING OF MUD AND DIRT ONTO PUBLIC ROADS BY CONSTRUCTION VEHICLES.

UNOFFICIAL SET

NOT FOR BIDDING

STATE OF TENNESSEE
DEPARTMENT OF TRANSPORTATION

GENERAL NOTES AND SPECIAL NOTES

GARVER

JLHolbrook 8/6/2014 5:09:13 PM
WORKSPACE: TDOT Bridge
L:\2010\00076\0 - TDOT - Bridge Repair over Cypress Creek\Drawings\SR57_GEN_NOTES.dgn

TYPE	YEAR	PROJECT NO.	SHEET NO.
CONST.	2014	55008-3242-04	2D

GENERAL NOTES (CONTINUED)

STREAM/WETLAND

(32) SOIL MATERIALS MUST BE PREVENTED FROM ENTERING WATERS OF THE STATE/U.S. EPSC MEASURES TO PROTECT WATER QUALITY MUST BE MAINTAINED THROUGHOUT THE CONSTRUCTION PERIOD. APPROPRIATE EPSC MEASURES MUST BE INSTALLED ALONG THE BASE OF ALL FILLS AND CUTS, ON THE DOWNHILL SIDE OF STOCKPILED SOIL, AND ALONG STREAM BANKS IN CLEARED AREAS TO PREVENT SEDIMENT MIGRATION INTO STREAMS IN ACCORDANCE WITH TDOT STANDARDS. THEY MUST BE INSTALLED ON THE CONTOUR, ENTRENCHED AND STAKED, AND EXTEND THE WIDTH OF THE AREA TO BE CLEARED.

(33) INSTREAM EPSC DEVICES REQUIRE THE ENVIRONMENTAL DIVISION'S PERMITS SECTION REVIEW AND MUST BE PROCESSED BY THE PERMITS SECTION TO OBTAIN TDEC, USACE, AND TVA PERMITS.

(34) THE OPERATION OF EQUIPMENT IN WATERS OF THE STATE/U.S., INCLUDING WETLANDS, SHALL BE ONLY AS SHOWN ON THE PROJECT PLANS AND/OR AS SO SPECIFIED IN THE ARAP/401, SECTION 404 PERMIT(S) AND/OR TVA26(A), IF APPLICABLE. ANY ADDITIONAL PERMITS REQUIRED BY THE CONTRACTOR'S METHOD OF OPERATION SHALL BE THE RESPONSIBILITY OF THE CONTRACTOR TO OBTAIN, AFTER RECEIVING THE APPROVAL OF TDOT ENVIRONMENTAL DIVISION.

(35) THE WIDTH OF THE FILL ASSOCIATED WITH TEMPORARY CROSSINGS SHALL BE LIMITED TO THE MINIMUM NECESSARY FOR THE ACTUAL CROSSING.

(36) STREAM BEDS SHALL NOT BE USED AS TRANSPORTATION ROUTES FOR CONSTRUCTION EQUIPMENT. TEMPORARY CROSSINGS MUST BE LIMITED TO ONE POINT PER STREAM AND EPSC MEASURES MUST BE USED WHERE THE STREAM BANKS ARE DISTURBED. WHERE THE STREAMBED IS NOT COMPOSED OF BEDROCK, A PAD OF CLEAN ROCK MUST BE USED AT THE CROSSING POINT AND CULVERTED TO PREVENT THE IMPOUNDMENT OF WATER FLOW. CLEAN ROCK IS ROCK OF VARIOUS TYPE AND SIZE, DEPENDING UPON APPLICATION, WHICH CONTAINS NO FINES, SOILS, OR OTHER WASTES OR CONTAMINANTS. OTHER MATERIALS USED FOR ALL TEMPORARY FILLS MUST BE COMPLETELY REMOVED IN THEIR ENTIRETY AFTER THE WORK IS COMPLETED AND THE AFFECTED AREAS RETURNED TO THEIR PREEXISTING ELEVATION. ALL TEMPORARY CROSSINGS MUST BE CONSTRUCTED IN ACCORDANCE WITH STD. DWG. EC-STR-25 UNLESS SPECIFICALLY ADDRESSED IN THE EPSC PLANS. ALTERNATIVELY, PLACING A TEMPORARY BRIDGE (BAILEY BRIDGE OR EQUIVALENT, TIMBERS, ETC.) FROM TOP OF BANK TO TOP OF BANK OR THE APPROPRIATE USE OF BARGES AT THE CROSSING TO AVOID DISTURBANCE OF THE STREAMBED IS AN ACCEPTABLE OPTION.

INSPECTION, MAINTENANCE, REPAIR

(37) EPSC CONTROLS WILL BE MAINTAINED IN ACCORDANCE WITH TDOT STANDARD DRAWINGS AND GOOD ENGINEERING PRACTICES.

(38) INSPECTION, REPAIR, AND MAINTENANCE OF EPSC MEASURES/STRUCTURES IS TO BE PERFORMED ON A REGULAR BASIS. SEDIMENT SHALL BE REMOVED FROM SEDIMENT CONTROL STRUCTURES WHEN THE DESIGN CAPACITY HAS BEEN REDUCED BY FIFTY PERCENT (50%). DURING SEDIMENT REMOVAL, THE CONTRACTOR SHALL TAKE CARE TO ENSURE THAT STRUCTURAL COMPONENTS OF EPSC MEASURES ARE NOT DAMAGED AND THUS MADE INEFFECTIVE. IF DAMAGE DOES OCCUR, THE CONTRACTOR SHALL REPAIR THE STRUCTURES AT THE CONTRACTOR'S OWN EXPENSE.

(39) SEDIMENT REMOVED FROM SEDIMENT CONTROL STRUCTURES SHALL BE PLACED AND BE TREATED IN A MANNER SO THAT THE SEDIMENT IS CONTAINED WITHIN THE PROJECT LIMITS AND DOES NOT MIGRATE INTO WATERS OF THE STATE/U.S. COST FOR THIS TREATMENT IS TO BE INCLUDED IN PRICE BID FOR ITEM NO. 209-05 SEDIMENT REMOVAL, C.Y

(40) THE CONTRACTOR SHALL INSTALL A RAIN GAUGE EVERY LINEAR MILE AT ALL SITES WHERE CLEARING, GRUBBING, EXCAVATION, GRADING CUTTING OR FILLING IS BEING ACTIVELY PERFORMED, OR EXPOSED SOIL HAS NOT YET BEEN PERMANENTLY STABILIZED. IF THE PROJECT LENGTH IS LESS THAN ONE LINEAR MILE, ONE RAIN GAUGE SHALL BE INSTALLED AT THE CENTER OF THE PROJECT OR AS INDICATED BY THE TDOT EPSC INSPECTOR. THE CONTRACTOR SHALL ENSURE THAT EACH GAUGE IS MAINTAINED IN GOOD WORKING CONDITION. TDOT AND/OR THE CONTRACTOR SHALL RECORD DAILY PRECIPITATION AND FORECASTED PERCENTAGE OF PRECIPITATION IN DETAILED RECORDS OF RAINFALL EVENTS INCLUDING DATES, AMOUNTS OF RAINFALL PER GAUGE, THE ESTIMATED DURATION (OR STARTING AND ENDING TIMES), AND FORECASTED PERCENTAGE OF PRECIPITATION FOR THE PROJECT. THIS INFORMATION SHALL BE PROVIDED TO THE ENGINEER ON A MONTHLY BASIS. THE COST FOR THE RAIN GAUGES IS TO BE INCLUDED IN THE UNIT BID PRICES FOR OTHER ITEMS. RAIN GAUGES SHALL BE AS SPECIFIED IN THE APPROVED TDOT RAINFALL MONITORING PLAN.

(41) INSPECTION OF EPSC MEASURES SHALL BE DONE AT LEAST TWICE PER CALENDAR WEEK AT LEAST 72 HOURS APART. A CALENDAR WEEK IS DEFINED AS SUNDAY THROUGH SATURDAY. QUALITY ASSURANCE/QUALITY CONTROL SITE ASSESSMENT OF EPSC SHALL BE PERFORMED PER THE TDOT ENVIRONMENTAL DIVISION'S COMPREHENSIVE INSPECTION OFFICE GUIDELINES.

(42) OUTFALL POINTS SHALL BE INSPECTED TO ASCERTAIN WHETHER EPSC MEASURES ARE EFFECTIVE IN PREVENTING SIGNIFICANT IMPACTS TO SURROUNDING WATERS. WHERE DISCHARGE LOCATIONS ARE INACCESSIBLE, NEARBY DOWNSTREAM LOCATIONS SHALL BE INSPECTED. LOCATIONS WHERE VEHICLES ENTER AND EXIT THE SITE SHALL BE INSPECTED FOR EVIDENCE OF OFF-SITE ROADWAY SEDIMENT TRACKING.

(43) UPON CONCLUSION OF THE INSPECTIONS, EPSC MEASURES FOUND TO BE INEFFECTIVE SHALL BE REPAIRED, REPLACED, OR MODIFIED BEFORE THE NEXT RAIN EVENT, IF POSSIBLE, BUT IN NO CASE MORE THAN 24 HOURS AFTER THE INSPECTION OR WHEN THE CONDITION IS IDENTIFIED. IF THE REPAIR, REPLACEMENT OR MODIFICATION IS NOT PRACTICAL WITHIN THE TIMEFRAME, WRITTEN DOCUMENTATION MUST BE PROVIDED IN THE FIELD BOOK AND AN ESTIMATED REPAIR, REPLACEMENT OR MODIFICATION SCHEDULE SHALL BE DOCUMENTED WITHIN 24 HOURS AFTER IDENTIFICATION.

(44) THE TDOT PROJECT SUPERVISOR (OR THEIR DESIGNEE) AND THE CONTRACTOR'S SITE SUPERINTENDENT ARE RESPONSIBLE FOR INSPECTIONS. MAINTENANCE AND REPAIR ACTIVITIES ARE THE RESPONSIBILITY OF THE CONTRACTOR. THE TDOT PROJECT SUPERVISOR OR THEIR DESIGNEE WILL COMPLETE THE INSPECTION REPORTS AND DISTRIBUTE COPIES PER THE CONTRACT.

MATERIALS

(45) WASTE AND BORROW AREAS SHALL BE LOCATED IN NON-WETLAND AREAS AND ABOVE THE 100-YEAR, FEDERAL EMERGENCY MANAGEMENT AGENCY FLOODPLAIN. BORROW AND WASTE DISPOSAL AREAS SHALL NOT AFFECT ANY WATERS OF THE STATE/U.S. UNLESS THESE AREAS ARE SPECIFICALLY COVERED BY AN ARAP, 404, OR NPDES PERMIT, OBTAINED SOLELY BY THE CONTRACTOR.

SWPPP, PERMITS, PLANS, RECORDS

(46) THE CONTRACTOR SHALL BE SOLELY RESPONSIBLE FOR AND OBTAIN ANY NECESSARY ENVIRONMENTAL PERMITS OR APPROVALS, INCLUDING BUT NOT LIMITED TO TDEC ARAP/401, USACE SECTION 404, TVA SECTION 26A, AND TDEC NPDES PERMITS, FROM FEDERAL, STATE AND/OR LOCAL AGENCIES REGARDING THE OPERATION OF ANY PROJECT-DEDICATED ASPHALT AND/OR CONCRETE PLANTS.

(47) ANY DISAGREEMENT BETWEEN THE PROJECT PLANS, THE PROJECT AS CONSTRUCTED, AND THE PERMIT(S) ISSUED FOR THE PROJECT, SHALL BE BROUGHT TO THE ATTENTION OF THE TDOT PROJECT ENGINEER. THE ENVIRONMENTAL DIVISION, ROADWAY DESIGN DIVISION, AND HEADQUARTERS CONSTRUCTION OFFICE SHALL BE CONTACTED IN THESE INSTANCES AND DECIDE WHICH HAS PRECEDENCE AND WHETHER PERMIT OR PLANS REVISIONS ARE NEEDED. IN GENERAL, PERMIT CONDITIONS WILL PREVAIL.

(48) THE FOLLOWING INFORMATION SHALL BE MAINTAINED ON OR NEAR THE SITE: DATES THAT MAJOR GRADING ACTIVITIES OCCUR, DATES WHERE CONSTRUCTION ACTIVITIES TEMPORARILY OR PERMANENTLY CEASE ON A PORTION OF THE SITE, DATES WHEN STABILIZATION MEASURES ARE INITIATED, EPSC INSPECTION RECORDS, QUALITY ASSURANCE SITE ASSESSMENT RECORDS, PRECIPITATION RECORDS, SWPPP, PROJECT ENVIRONMENTAL PERMITS, AND A COPY OF THE PROJECT EPSC INSPECTOR'S TDEC LEVEL 1 CERTIFICATION.

(49) ALL WATER QUALITY AND STORM WATER PERMITS, INCLUDING A COPY OF THE NOC WITH NPDES PERMIT TRACKING NUMBER AND THE LOCATION OF THE SWPPP, SHALL BE POSTED NEAR THE MAIN ENTRANCE OF THE CONSTRUCTION SITE ACCESSIBLE TO THE PUBLIC. THE NAME, COMPANY NAME, EMAIL ADDRESS, TELEPHONE NUMBER AND ADDRESS OF THE PROJECT SITE OWNER, OPERATOR, OR A LOCAL CONTACT PERSON WITH A BREIF DESCRIPTION OF THE PROJECT SHALL ALSO BE POSTED. IF POSTING THIS INFORMATION NEAR A MAIN ENTRANCE IS INFEASIBLE, THE INFORMATION SHALL BE PLACED IN A PUBLICLY ACCESSIBLE LOCATION NEAR WHERE THE CONSTRUCTION IS ACTIVELY UNDERWAY AND MOVED AS NECESSARY. THIS LOCATION SHALL BE POSTED AT THE CONSTRUCTION SITE. ALL POSTINGS SHALL BE MAINTAINED IN LEGIBLE CONDITION.

(50) IF A CHANGE IN PROJECT SCOPE OCCURS DURING CONSTRUCTION, INCLUDING VALUE ENGINEERING, THE ENVIRONMENTAL DIVISION SHALL BE CONTACTED TO DETERMINE WHETHER PERMIT REVISIONS OR MODIFICATIONS OF THE SWPPP ARE NEEDED. THE ROADWAY DESIGN DIVISION SHALL BE CONTACTED TO DETERMINE IF ANY PLAN REVISIONS ARE NEEDED.

(51) THE SWPPP SHALL BE UPDATED BY CONSTRUCTION WHENEVER EPSC INSPECTIONS INDICATE, OR WHERE STATE OR FEDERAL OFFICIALS DETERMINE EPSC MEASURES ARE PROVING INEFFECTIVE IN ELIMINATING OR SIGNIFICANTLY MINIMIZING POLLUTANT SOURCES OR ARE OTHERWISE NOT ACHIEVING THE GENERAL OBJECTIVES OF CONTROLLING POLLUTANTS IN STORM WATER DISCHARGES ASSOCIATED WITH THE CONSTRUCTION ACTIVITY. THE ENVIRONMENTAL DIVISION SHALL BE CONTACTED WHEN MAJOR DESIGN REVISIONS ARE REQUESTED BY CONSTRUCTION. THE ENVIRONMENTAL DIVISION MAY BE CONTACTED FOR GUIDANCE ON SPECIFIC SWPPP NEEDS. A COPY OF ANY CORRESPONDENCE REGARDING THE EFFECTIVENESS OF THE SWPPP OR EPSC CONTROLS SHALL BE RETAINED IN THE SWPPP.

(52) PROJECT INSPECTORS AND SUPERVISORS (INCLUDING TDOT STAFF, CONSULTANTS AND CONTRACTOR STAFF) RESPONSIBLE FOR THE IMPLEMENTATION AND MAINTENANCE OF EPSC PLANS SHALL SUCCESSFULLY COMPLETE THE TDEC "LEVEL 1 - FUNDAMENTALS OF EROSION PREVENTION AND SEDIMENT CONTROL FOR CONSTRUCTION SITES" COURSE AND ANY REFRESHER COURSES AS REQUIRED TO MAINTAIN CERTIFICATION. A COPY OF CERTIFICATION RECORDS FOR THE COURSES SHALL BE KEPT ON SITE AND AVAILABLE UPON REQUEST.

LITTER, DEBRIS, WASTE, PETROLEUM

(53) THE CONTRACTOR SHALL ESTABLISH AND MAINTAIN A PROACTIVE METHOD TO PREVENT LITTER, CONSTRUCTION DEBRIS, AND CONSTRUCTION WASTES FROM ENTERING WATERS OF THE STATE/U.S. THESE MATERIALS WILL BE PICKED UP AND REMOVED FROM STORMWATER EXPOSURE PRIOR TO ANTICIPATED STORM EVENTS. AFTER USE, MATERIALS USED FOR EPSC WILL BE REMOVED FROM THE SITE.

(54) THE CONTRACTOR SHALL TAKE APPROPRIATE STEPS TO ENSURE THAT PETROLEUM PRODUCTS OR OTHER CHEMICAL POLLUTANTS ARE PREVENTED FROM ENTERING WATERS OF THE STATE/U.S. ALL EQUIPMENT REFUELING, SERVICING, AND STAGING AREAS SHALL COMPLY WITH ALL LOCAL, STATE, AND FEDERAL LAWS, RULES, REGULATIONS, AND ORDINANCES, INCLUDING THOSE OF THE NATIONAL FIRE PROTECTION ASSOCIATION (NFPA). APPROPRIATE CONTAINMENT MEASURES FOR THESE AREAS SHALL BE USED. ALL SPILLS MUST BE REPORTED TO THE APPROPRIATE AGENCY, AND MEASURES SHALL BE TAKEN IMMEDIATELY TO PREVENT THE POLLUTION OF WATERS OF THE STATE/U.S., INCLUDING GROUNDWATER, SHOULD A SPILL OCCUR.

SPECIAL NOTES

SPECIES NOTES

(1) IN-STREAM ACTIVITY SHALL BE LIMITED TO THE ABSOLUTE MINIMUM, AND SHALL BE ALLOWED ONLY IN COMPLIANCE WITH ALL APPLICABLE WATER QUALITY PERMITS.

(2) A SWEEP FOR THE STATE PROTECTED HATCHIE BURROWING CRAYFISH (FALLICAMBARUS HORTONI) AND THE PIEBALD MADTOM (NOTURUS GLADIATOR) MUST BE CONDUCTED PRIOR TO ANY IN-STREAM WORK ON STR-1. THE CONTRACTOR SHALL CONTACT TIM NEHUS AT (615) 330-0745 IN TDOT'S ENVIRONMENTAL DIVISION THREE WEEKS PRIOR TO ANY IN-STREAM WORK VIA THE REGIONAL CONSTRUCTION OFFICE TO ARRANGE FOR THE SWEEP TO BE PERFORMED.

(3) BEST MANAGEMENT PRACTICES REGARDING EROSION AND SEDIMENT CONTROL SHOULD BE IMPLEMENTED AND STRICTLY ENFORCED THROUGHOUT ALL STAGES OF THE PROJECT.

UNOFFICIAL SET

NOT FOR BIDDING

STATE OF TENNESSEE
DEPARTMENT OF TRANSPORTATION

GENERAL NOTES AND SPECIAL NOTES

JJ Halbrook 8/6/2014 5:09:37 PM
WORKSPACE: TDOT Bridge
L:\2010\1001610 - TDOT - Bridge Repair over Cypress Creek\Drawings\SR57_GEN_NOTES 2.dgn

GARVER

TYPE	YEAR	PROJECT NO.	SHEET NO.
CONST.	2014	55008-3242-04	2E

PROPOSED GUARDRAIL

SHEET NO.	LOCATION	SIDE		STATION		GUARDRAIL				TERMINAL ANCHORS					REMARKS
		LT	RT	FROM	TO	BRIDGE ENDS 705-01.01 (L.F.)	BRIDGE PIERS 705-01.02 (L.F.)	SINGLE TYPE 2 705-02.02 (L.F.)	MEDIAN TYPE 2 705-03.03 (L.F.)	TYPE 12 705-04.02 (EACH)	TYPE 13 705-04.03 (EACH)	TYPE 21 705-04.04 (EACH)	TYPE IN-LINE 705-04.05 (EACH)	TYPE 38 705-04.07 (EACH)	
3A	S.R. 57	X		21+24.61	22+76.50	26.90		75						1	
3A	S.R. 57		X	22+11.04	22+52.69	26.90		25			1				
3A	S.R. 57		X	25+82.39	26+59.26	26.90								1	
3A	S.R. 57	X		26+06.21	26+83.08	26.90								1	
TOTALS						107.60	0	100	0	0	1	0	0	3	

ESTIMATED GRADING QUANTITIES

STATION TO STATION	ROAD & DRAINAGE EXC. (UNCL.)		BORROW EXCAVATION		CHANNEL EXC. C.Y.	EXCESS EXC. WASTE C.Y.	EMB. C.Y.
	COMMON - C.Y.	S. ROCK - C.Y.	UNCL. - C.Y.	S. ROCK - C.Y.			
20+00 to 28+00	213		4168				
BRIDGE ENDS	136						
FIELD ENTRANCE			173				
TOTALS	349	0	4341	0	0	0	0

TRAFFIC CONTROL QUANTITIES

ITEM NO.	DESCRIPTION	UNIT	PHASE 1	PHASE 2	TOTAL QUANTITY
705-04.50	PORTABLE BARRIER RAIL DELINEATOR	EACH	102	108	108
705-08.51	PORTABLE IMPACT ATTENUATOR (NCHRP 350-TL3)	EACH	2	2	2
712-01	TRAFFIC CONTROL	L.S.	0.5	0.5	1
712-02.02	INTERCONNECTED PORTABLE BARRIER RAIL	L.F.	1250	1300	1300
712-04.01	FLEXIBLE DRUMS (CHANNELIZING)	EACH	30	20	30
712-06	SIGNS (CONSTRUCTION)	SQ. FT.	428	428	428
712-07.03	TEMPORARY BARRICADES (TYPE III)	L.F.	12	0	12
712-09.01	REMOVABLE PAVEMENT MARKING LINE	L.F.	1549	1600	3149
712-09.04	REMOVABLE PAVEMENT MARKING (STOP LINE)	L.F.	36	0	36
730-40	TEMPORARY TRAFFIC CONTROL SYSTEM	EACH	3	3	3

EROSION PREVENTION AND SEDIMENT CONTROL QUANTITIES

ITEM NO.	DESCRIPTION	UNIT	QUANTITY
209-05	SEDIMENT REMOVAL	C.Y.	13
209-08.02	TEMPORARY SILT FENCE (WITH BACKING)	L.F.	3027
209-08.08	ENHANCED ROCK CHECK DAM	EACH	2

TRAFFIC CONTROL SIGNS

DESCRIPTION	M.U.T.C.D. NO.	SIZE (IN.)	UNIT (S.F.)	PHASE 1	PHASE 2	ITEM NO. 712-06 (S.F.)
END ROAD WORK	G20-2	48 X 24	8	3	3	24.0
STOP HERE ON RED	R10-6	24 X 36	6	3	3	18.0
STAY IN LANE TO EXTENDED GREEN	R10-6 (MOD.)	30 X 24	5	3	3	15.0
REVERSE CURVE	W1-4AR	48 X 48	16	1	1	16.0
SIGNAL AHEAD (SYMBOL)	W3-3	48 X 48	16	3	3	48.0
BE PREPARED TO STOP	W3-4	48 X 48	16	2	2	32.0
1000 FT.	W16-2	24 X 12	2	2	2	4.0
ROAD WORK 500 FT.	W20-1	48 X 48	16	2	2	32.0
ROAD WORK 1000 FT.	W20-1	48 X 48	16	3	3	48.0
ROAD WORK 1500 FT.	W20-1	48 X 48	16	2	2	32.0
ROAD WORK 1/2 MILE	W20-1	48 X 48	16	2	2	32.0
ONE LANE ROAD 1500 FT.	W20-4	48 X 48	16	2	2	32.0
FLAGGER	W20-7A	48 X 48	16	2	2	32.0
MAINTAIN XX MPH SPEED	-	36 X 42	10.5	2	2	21.0
MAXIMUM X MIN. RED	-	48 X 42	14	3	3	42.0
TOTAL						428.0

UNOFFICIAL SET

NOT FOR BIDDING

STATE OF TENNESSEE
DEPARTMENT OF TRANSPORTATION

TABULATED QUANTITIES

GARVER

JLHolbrook 8/6/2014 5:09:59 PM
WORKSPACE: TDOT Bridge
\\gltdc01\LITProjects\2010\100760 - TDOT - Bridge Repair over Cypress Creek\Drawings\SR57_GEN_TBQ.dgn

TYPE	YEAR	PROJECT NO.	SHEET NO.
CONST	2014	55008-3242-04	2F

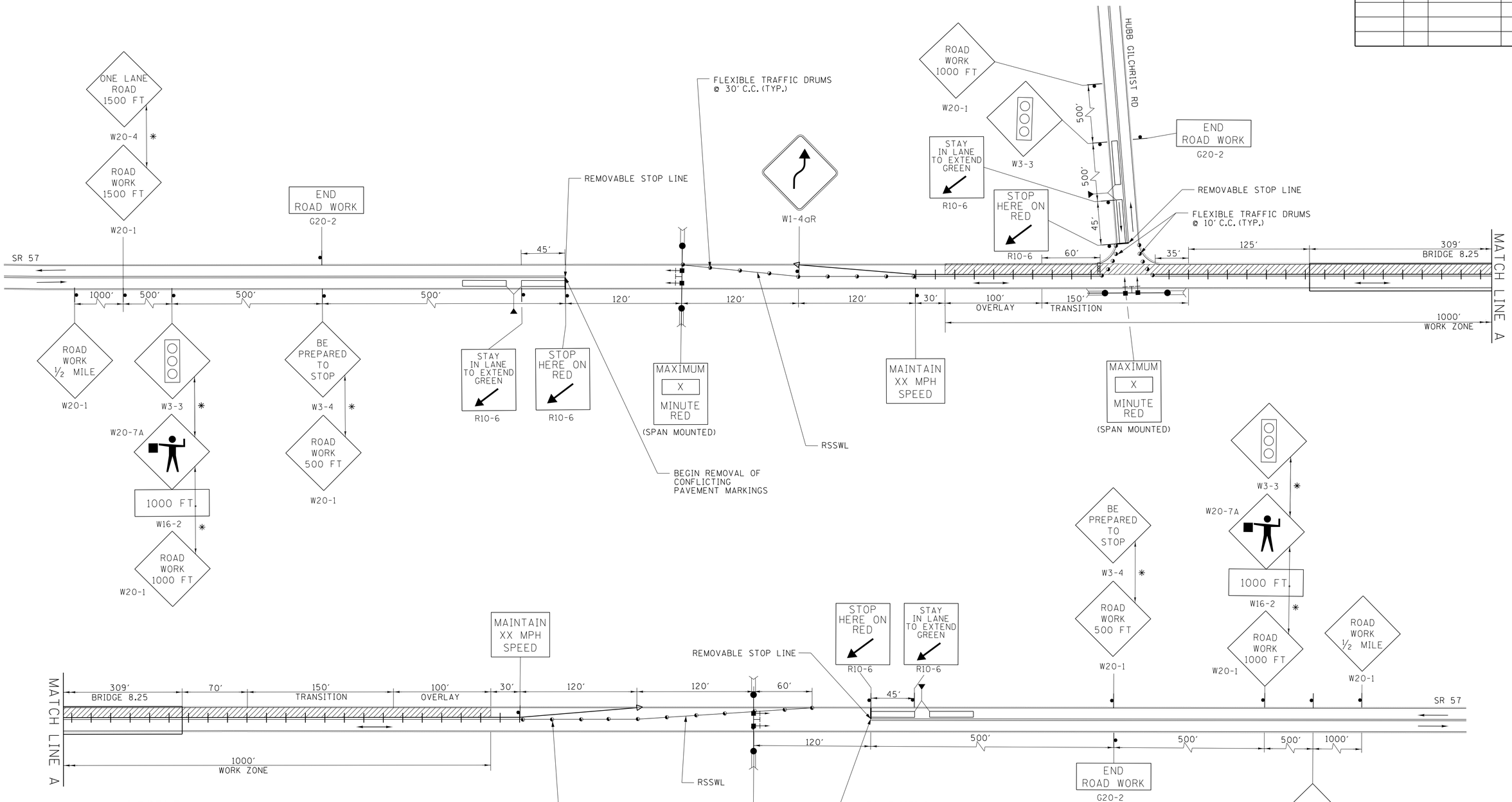

LEGEND

- AREA UNDER CONSTRUCTION
- FLEXIBLE TRAFFIC DRUM
- REMOVABLE INTERCONNECTED PORTABLE BARRIER RAIL WITH BARRIER RAIL DELINEATORS @ 20' (TYP.)
- TRAFFIC SIGN
- DIRECTION OF TRAFFIC
- ATTENUATOR
- TYPE III BARRICADE
- RSSWL — REMOVABLE SINGLE SOLID WHITE LINE

PHASE I TRAFFIC CONTROL

UNOFFICIAL SET

NOT FOR BIDDING

STATE OF TENNESSEE
DEPARTMENT OF TRANSPORTATION
BUREAU OF PLANNING AND DEVELOPMENT

TRAFFIC CONTROL PLAN PHASE I

SCALE: NONE

GARVER

JLHolbrook 8/6/2014 5:10:14 PM
WORKSPACE: TDOT Bridge
\\gltdc01\LTProjects\2010\100\7610 - TDOT - Bridge Repair over Cypress Creek\Drawings\BRG\TC-1-1.dgn

TYPE	YEAR	PROJECT NO.	SHEET NO.
CONST	2014	55008-3242-04	2G

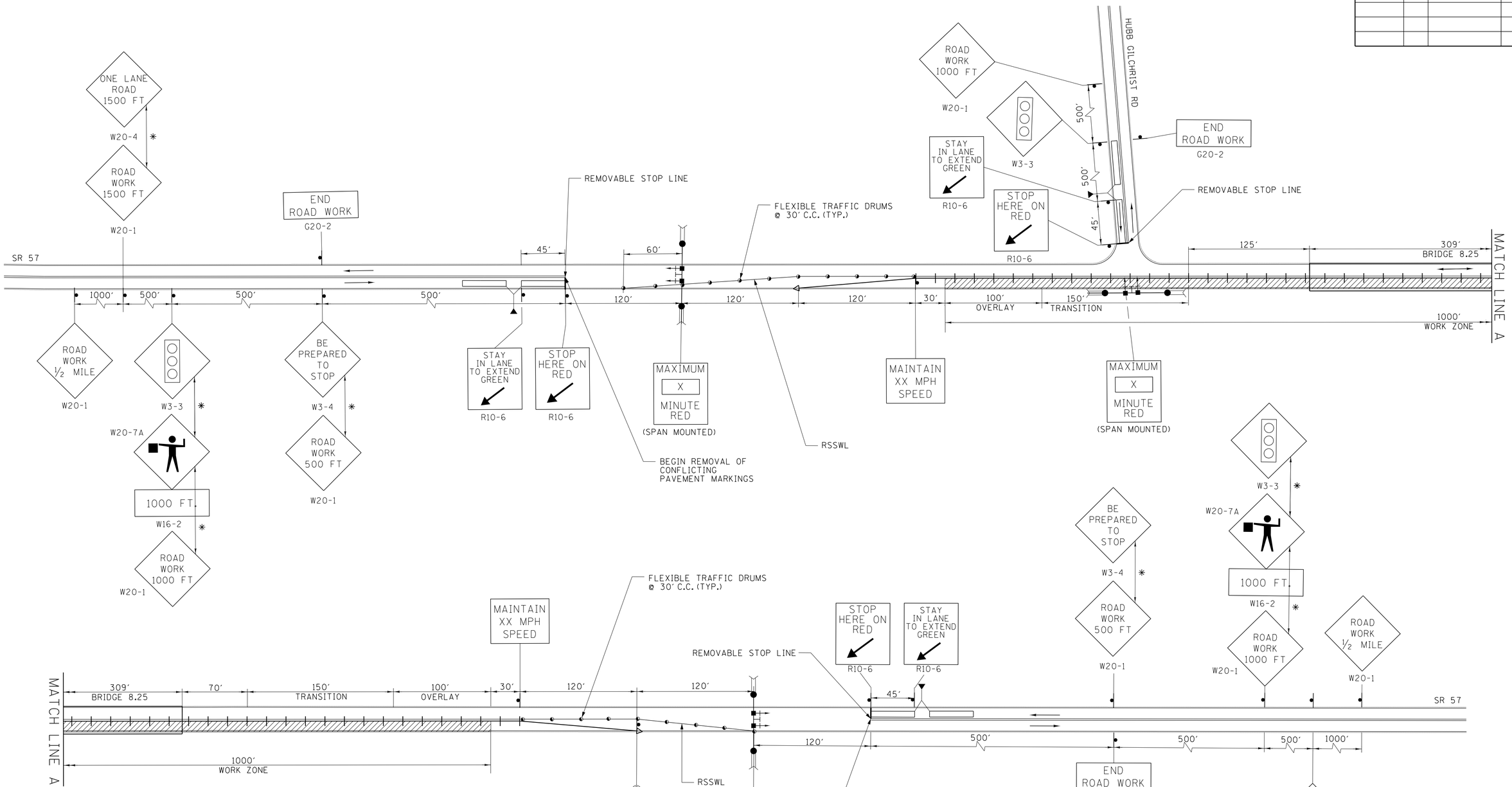

LEGEND

- AREA UNDER CONSTRUCTION
- FLEXIBLE TRAFFIC DRUM
- REMOVABLE INTERCONNECTED PORTABLE BARRIER RAIL WITH BARRIER RAIL DELINEATORS @ 20' (TYP.)
- TRAFFIC SIGN
- DIRECTION OF TRAFFIC
- ATTENUATOR
- TYPE III BARRICADE
- RSSWL REMOVABLE SINGLE SOLID WHITE LINE

UNOFFICIAL SET

NOT FOR BIDDING

STATE OF TENNESSEE
DEPARTMENT OF TRANSPORTATION
BUREAU OF PLANNING AND DEVELOPMENT

TRAFFIC CONTROL PLAN PHASE II

SCALE: NONE

PHASE II TRAFFIC CONTROL

GARVER

JLHalbrook 8/6/2014 5:10:15 PM
WORKSPACE: TDOT Bridge
\\gltdc01\LTProjects\2010\0007610 - TDOT - Bridge Repair over Cypress Creek\Drawings\BRG\TC-II-1.dgn

TYPE	YEAR	PROJECT NO.	SHEET NO.
CONST.	2014	55008-3242-04	3

TDOT CONTROL POINTS				
NUMBER	NORTHING	EASTING	ELEV.	DESCRIPTION
TDOT 1	277555.0400	1173594.4313	403.01	CM
TDOT 2	277418.1135	1174558.9130	401.68	CM

IN-STREAM ACTIVITY SHALL BE LIMITED TO THE ABSOLUTE MINIMUM, AND SHALL BE ALLOWED ONLY IN COMPLIANCE WITH ALL APPLICABLE WATER QUALITY PERMITS.

A SWEEP FOR THE STATE PROTECTED HATCHIE BURROWING CRAYFISH (FALLICAMBARUS HORTONI) AND THE PIEBALD MADTOM (NOTURUS GLADIATOR) MUST BE CONDUCTED PRIOR TO ANY IN-STREAM WORK ON STR-1. THE CONTRACTOR SHALL CONTACT TIM NEHUS IN TDOT'S ENVIRONMENTAL DIVISION THREE WEEKS PRIOR TO ANY IN-STREAM WORK VIA THE REGIONAL CONSTRUCTION OFFICE TO ARRANGE FOR THE SWEEP TO BE PERFORMED.

BEST MANAGEMENT PRACTICES REGARDING EROSION AND SEDIMENT CONTROL SHOULD BE IMPLEMENTED AND STRICTLY ENFORCED THROUGHOUT ALL STAGES OF THE PROJECT.

EXIST. BRIDGE ID. NO. 55SR570005 IS A 13 SPAN CONCRETE BRIDGE WITH TIMBER PIERS AND A CONCRETE DECK (RIVER SPAN HAS CONCRETE PIERS). EXISTING BRIDGE IS 299'-11" LONG AND 28'-6" WIDE WITH AN EXIST. ASPHALT OVERLAY ENTIRE LENGTH OF BRIDGE. EXIST. BRIDGE TO BE REMOVED TO NATURAL GROUND. EXIST. FLOOD GAGE ON SOUTH SIDE OF BRIDGE TO BE REMOVED, STORED, AND RE-INSTALLED AT THE COMPLETION OF BRIDGE CONSTRUCTION.

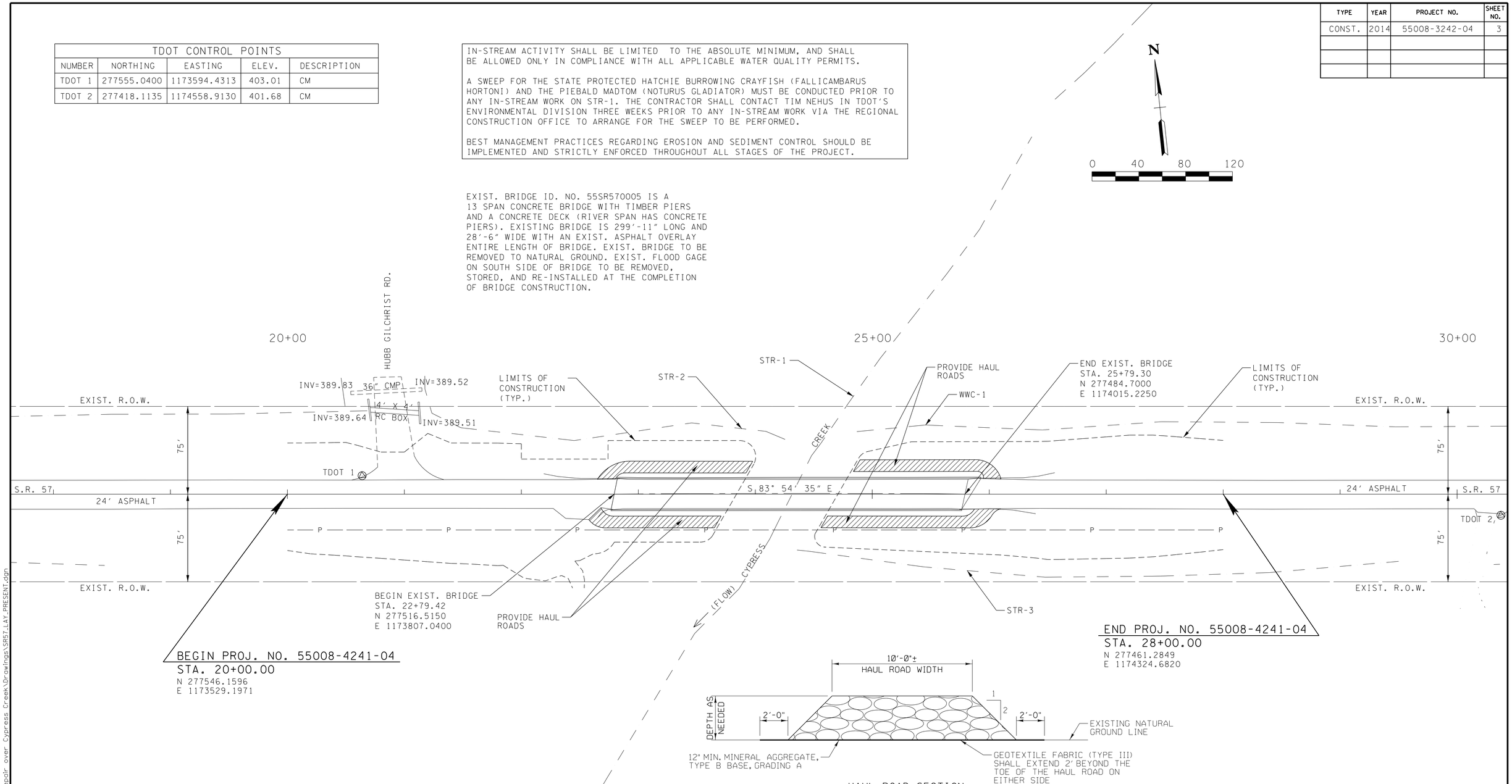

HAUL ROAD SECTION

(ITEM NO. 203-50, CONSTRUCTION OF HAUL ROAD, LS)
SCALE: NTS

NOTES:

THE CONTRACTOR SHALL CONSTRUCT THE NEW HAUL ROAD TO PROVIDE ACCESS FOR CONSTRUCTION ACCORDING TO THE DETAILS SHOWN ON THIS DRAWING AND THE DIRECTION IN THE FIELD BY THE ENGINEER FROM TDOT. ALL WORK SHALL MEET THE FULL APPROVAL OF THE ENGINEER.

COST OF ALL LABOR, MATERIALS, AND EQUIPMENT TO CONSTRUCT THE NEW HAUL ROAD AND RESTORE THE LOCATION BACK TO THE ORIGINAL CONDITION SHALL BE INCLUDED IN ITEM NO. 203-50, CONSTRUCTION OF HAUL ROAD, LS.

COST OF GEOTEXTILE FABRIC (TYPE III) FOR HAUL ROAD SHALL BE INCLUDED IN ITEM NO. 740-10.03, GEOTEXTILE (TYPE III) (EROSION CONTROL), SY.

COORDINATES ARE NAD/83(1995), ARE DATUM ADJUSTED BY THE FACTOR OF 1.000037524 AND TIED TO THE TGRN. ALL ELEVATIONS ARE REFERENCED TO THE NAVD 1988.

UNOFFICIAL SET

NOT FOR BIDDING

STATE OF TENNESSEE
DEPARTMENT OF TRANSPORTATION

PRESENT LAYOUT

GARVER

JLHalbrook 8/6/2014 5:06 PM
WORKSPACE: TDOT Bridge
\\qlfdc01\LTProjects\2010\0017610 - TDOT - Bridge Repair over Cypress Creek\Drawings\SR57_LAY_PRESENT.dgn

TYPE	YEAR	PROJECT NO.	SHEET NO.
CONST.	2014	55008-3242-04	3A

IN-STREAM ACTIVITY SHALL BE LIMITED TO THE ABSOLUTE MINIMUM, AND SHALL BE ALLOWED ONLY IN COMPLIANCE WITH ALL APPLICABLE WATER QUALITY PERMITS.

A SWEEP FOR THE STATE PROTECTED HATCHIE BURROWING CRAYFISH (FALLICAMBARUS HORTONI) AND THE PIEBALD MADTOM (NOTURUS GLADIATOR) MUST BE CONDUCTED PRIOR TO ANY IN-STREAM WORK ON STR-1. THE CONTRACTOR SHALL CONTACT TIM NEHUS IN TDOT'S ENVIRONMENTAL DIVISION THREE WEEKS PRIOR TO ANY IN-STREAM WORK VIA THE REGIONAL CONSTRUCTION OFFICE TO ARRANGE FOR THE SWEEP TO BE PERFORMED.

BEST MANAGEMENT PRACTICES REGARDING EROSION AND SEDIMENT CONTROL SHOULD BE IMPLEMENTED AND STRICTLY ENFORCED THROUGHOUT ALL STAGES OF THE PROJECT.

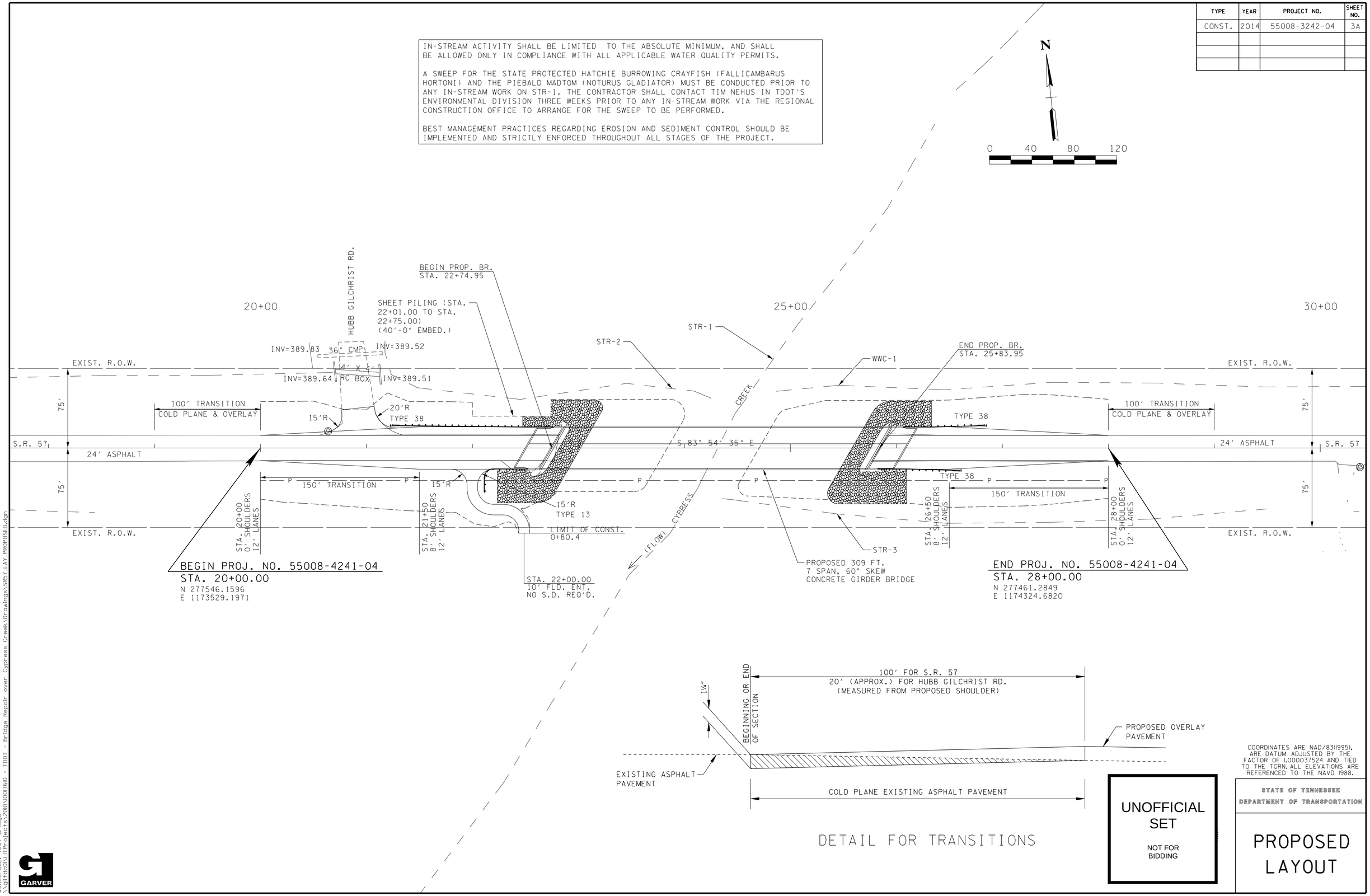

COORDINATES ARE NAD/83(1995), ARE DATUM ADJUSTED BY THE FACTOR OF 1.000037524 AND TIED TO THE TGRN. ALL ELEVATIONS ARE REFERENCED TO THE NAVD 1988.

UNOFFICIAL SET

NOT FOR BIDDING

STATE OF TENNESSEE
DEPARTMENT OF TRANSPORTATION

PROPOSED LAYOUT

GARVER

JLHalbrook 8/6/2014 5:10:17 PM
WORKSPACE: TDOT Bridge
\\qlfdc01\LTProjects\2010\0017610 - TDOT - Bridge Repair over Cypress Creek\Drawings\SR57_LAY_PROPOSED.dgn

TYPE	YEAR	PROJECT NO.	SHEET NO.
CONST.	2014	55008-3242-04	3B

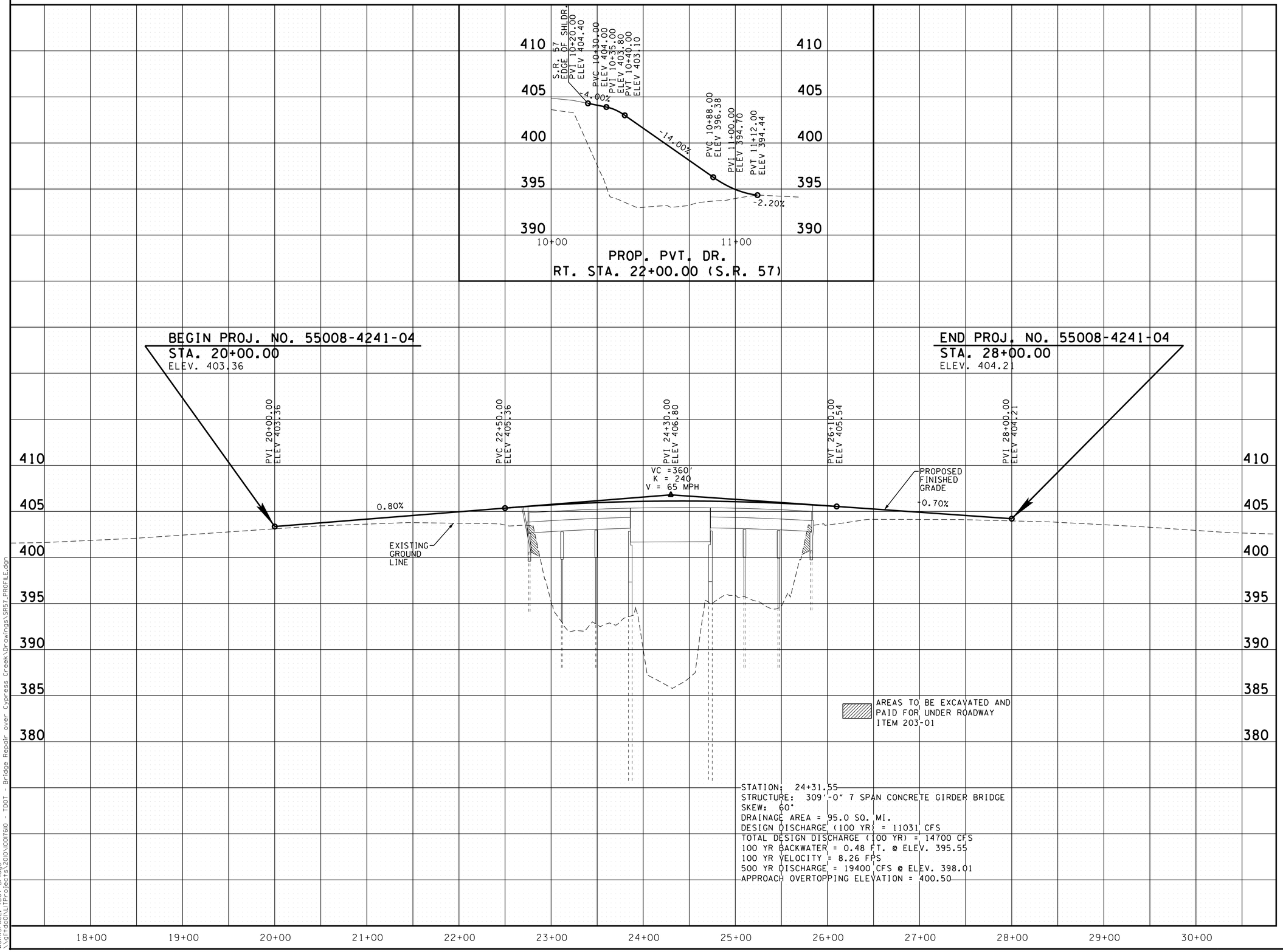

UNOFFICIAL SET

NOT FOR BIDDING

STATE OF TENNESSEE
DEPARTMENT OF TRANSPORTATION

PROFILE

JLHalbrook 8/6/2014 5:10:18 PM
WORKSPACE: TDOT Bridge
\\glltdc01\LiTProjects\2010\0076\0 - TDOT - Bridge Repair over Cypress Creek\Drawings\SR57_PROFILE.dgn

TYPE	YEAR	PROJECT NO.	SHEET NO.
CONST.	2014	55008-3242-04	4

EROSION PREVENTION AND SEDIMENT CONTROL SPECIAL NOTES

STREAM/WETLAND

(1) ANY WORK WITHIN THE STREAM CHANNEL AREA (E.G., FOR PIER FOOTING, RIP-RAP PLACEMENT, MULTI-BARREL CULVERT/BRIDGE CONSTRUCTION, ETC.) SHALL BE SEPARATED FROM FLOWING WATER OR EXPECTED FLOW PATH AND PERFORMED DURING LOW FLOW CONDITIONS. ALL ITEMS USED WITHIN THE STREAM CHANNEL AREA FOR DIVERSION OF FLOW (OR EXPECTED FLOW), UNLESS SPECIFIED IN THE PLANS, SHALL NOT BE PAID FOR DIRECTLY BUT SHALL BE INCLUDED IN THE COST OF OTHER ITEMS. THIS NOTE EXCLUDES ANY ITEMS SPECIFIED IN THE PLANS FOR THE TEMPORARY DIVERSION CHANNELS, EC-STR-31 AND TEMPORARY DIVERSION CULVERTS, EC-STR-32 FOR SINGLE BARREL CULVERT CONSTRUCTION.

NPDES

(2) NO WORK SHALL BE STARTED UNTIL THE CONTRACTOR'S PLAN FOR THE STAGING OF THEIR OPERATIONS, INCLUDING THE PLAN FOR STAGING OF TEMPORARY AND PERMANENT EPSC MEASURES, HAS BEEN ACCEPTED BY THE ENGINEER. THE CONTRACTOR'S EPSC PLAN SHALL INCORPORATE AND SUPPLEMENT, AS ACCEPTABLE, THE BASIC EPSC DEVICES ON THE EPSC PLAN CONTAINED IN THE APPROVED SWPPP.

(3) THE EPSC MEASURES AND/OR PLAN SHALL BE MODIFIED AS NECESSARY SO THAT THEY ARE EFFECTIVE AT ALL TIMES THROUGHOUT THE COURSE OF THE PROJECT.

(4) THE ACCEPTED EPSC PLAN SHALL REQUIRE THAT EPSC MEASURES BE IN PLACE BEFORE CLEARING, GRUBBING, EXCAVATION, GRADING, CUTTING OR FILLING OCCURS, EXCEPT AS SUCH WORK MAY BE NECESSARY TO INSTALL EPSC MEASURES, INCLUDING WITHOUT LIMITATION AS FOLLOWS:

A. INITIAL CLEARING AND GRUBBING SHALL BE LIMITED TO THAT NECESSARY FOR THE INSTALLATION OF APPLICABLE EPSC MEASURES IN ACCORDANCE WITH THE ACCEPTED EPSC PLAN INCORPORATED INTO THE SWPPP.

B. NO OTHER CLEARING AND GRUBBING OPERATIONS SHALL BE STARTED BEFORE APPLICABLE EPSC MEASURES ARE IN PLACE IN ACCORDANCE WITH THE ACCEPTED EPSC PLAN INCORPORATED INTO THE SWPPP.

C. NO CULVERT OR BRIDGE CONSTRUCTION SHALL BE STARTED BEFORE APPLICABLE EPSC MEASURES ARE IN PLACE IN ACCORDANCE WITH THE ACCEPTED EPSC PLAN CORPORATED INTO THE SWPPP.

D. NO GRADING, EXCAVATION, CUTTING, FILLING, OR OTHER EARTHWORK SHALL BE STARTED BEFORE EPSC MEASURES ARE IN PLACE IN ACCORDANCE WITH THE ACCEPTED EPSC PLAN INCORPORATED INTO THE SWPPP.

(5) PERMANENT EPSC MEASURES SHALL BE INITIATED WITHIN 14 CALENDAR DAYS AFTER FINAL GRADING OF ANY SEQUENCE OR PHASE. TEMPORARY OR PERMANENT STABILIZATION SHALL BE INITIATED WITHIN 14 CALENDAR DAYS AFTER FINAL GRADING OR WHEN CONSTRUCTION ACTIVITIES ON A PORTION OF THE SITE ARE TEMPORARILY CEASED AND EARTH DISTURBING ACTIVITIES WILL NOT RESUME UNTIL AFTER 14 CALENDAR DAYS. PERMANENT STABILIZATION WITH PERENNIAL VEGETATION OR OTHER PERMANENTLY STABLE NON-ERODING SURFACE SHALL REPLACE ANY TEMPORARY MEASURES AS SOON AS PRACTICABLE. UNPACKED GRAVEL CONTAINING FINES (SILT AND CLAY SIZED PARTICLES) OR CRUSHER-RUN WILL NOT BE CONSIDERED A NON-ERODIBLE SURFACE.

(6) STEEP SLOPES (A NATURAL OR CREATED SLOPE OF 35% GRADE (2.8H:1V) OR GREATER REGARDLESS OF HEIGHT) SHALL BE TEMPORARILY STABILIZED NO LATER THAN 7 CALENDAR DAYS AFTER CONSTRUCTION ACTIVITY ON THE SLOPE HAS TEMPORARILY OR PERMANENTLY CEASED.

FOR ADDITIONAL EROSION PREVENTION AND SEDIMENT CONTROL SPECIAL NOTES, SEE SHEET NOS. 4D-4E.

UNOFFICIAL SET

NOT FOR BIDDING

STATE OF TENNESSEE
DEPARTMENT OF TRANSPORTATION

EROSION PREVENTION AND SEDIMENT CONTROL NOTES

GARVER

JLHalbrook 8/6/2014 5:10:19 PM
WORKSPACE: TDOT Bridge
\\glltdc01\LITProjects\2010\00076\0 - TDOT - Bridge Repair over Cypress Creek\Drawings\SR57_EPSC_NOTES.dgn

TYPE	YEAR	PROJECT NO.	SHEET NO.
CONST.	2014	55008-3242-04	4A

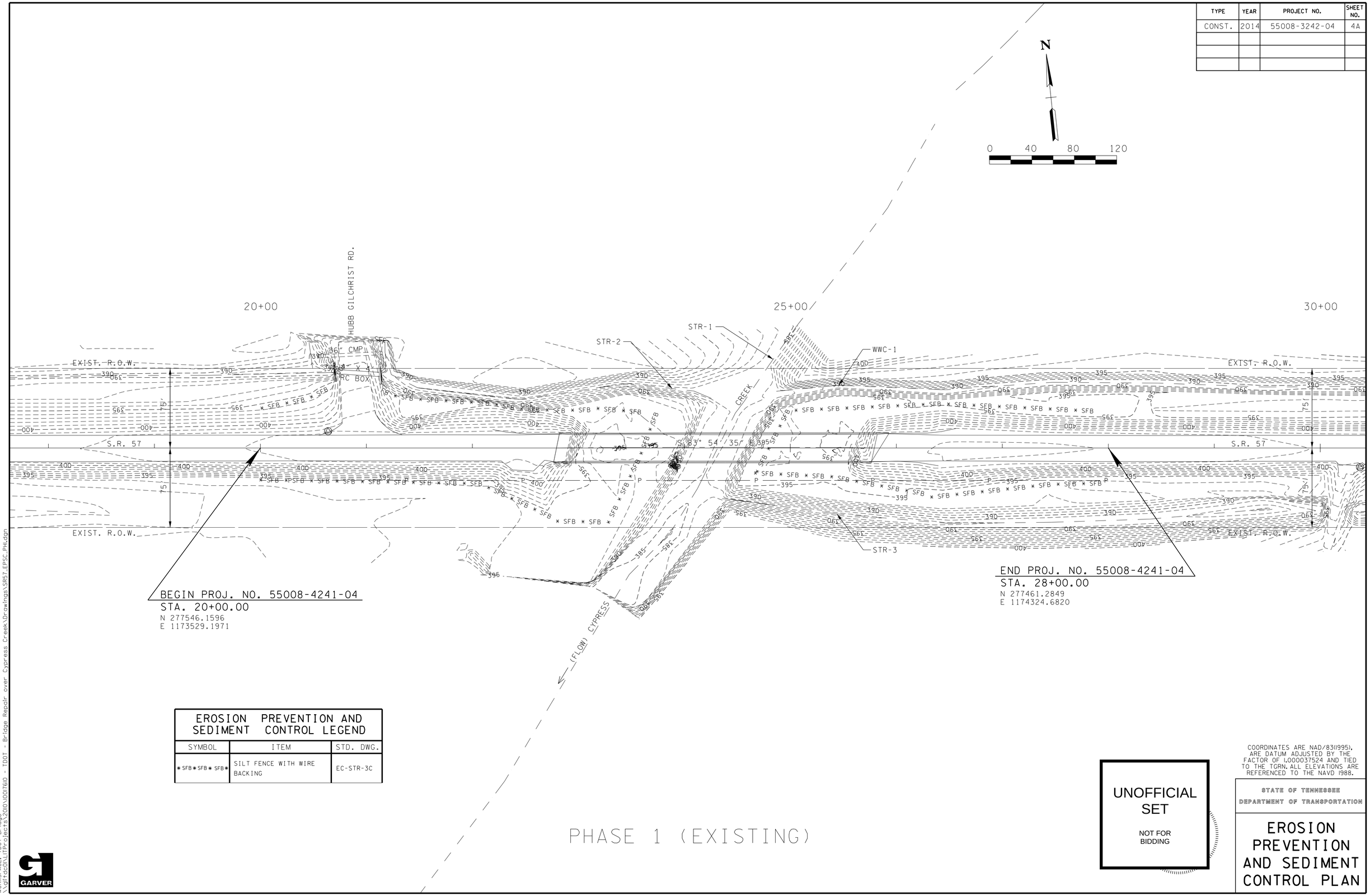

EROSION PREVENTION AND SEDIMENT CONTROL LEGEND		
SYMBOL	ITEM	STD. DWG.
* SFB * SFB * SFB *	SILT FENCE WITH WIRE BACKING	EC-STR-3C

COORDINATES ARE NAD/83(1995), ARE DATUM ADJUSTED BY THE FACTOR OF 1.000037524 AND TIED TO THE TGRN. ALL ELEVATIONS ARE REFERENCED TO THE NAVD 1988.

UNOFFICIAL SET

NOT FOR BIDDING

STATE OF TENNESSEE
DEPARTMENT OF TRANSPORTATION

EROSION PREVENTION AND SEDIMENT CONTROL PLAN

GARVER

JLHolbrook 8/6/2014 5:10:29 PM
WORKSPACE: TDOT_Bridge
\\gltdc01\LITProjects\2010\100176\0 - TDOT - Bridge Repair over Cypress Creek\Drawings\SR57_EPSC_PH1.dgn

TYPE	YEAR	PROJECT NO.	SHEET NO.
CONST.	2014	55008-3242-04	4B

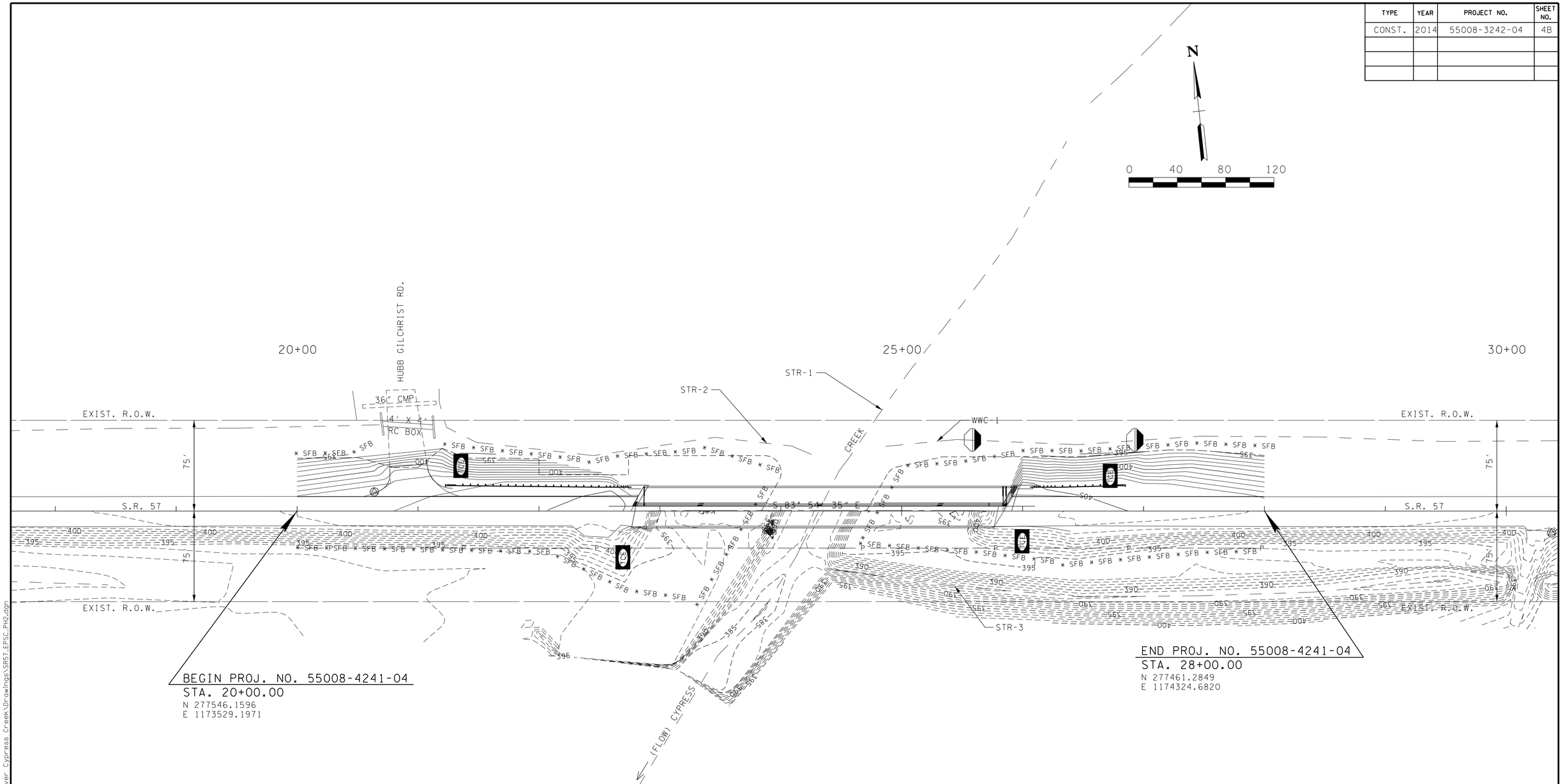

EROSION PREVENTION AND SEDIMENT CONTROL LEGEND		
SYMBOL	ITEM	STD. DWG.
* SFB * SFB * SFB *	SILT FENCE WITH WIRE BACKING	EC-STR-3C
	ENHANCED ROCK CHECK DAM (TRAPEZOIDAL DITCH)	EC-STR-6A
TCE	TEMPORARY CONSTRUCTION EXIT ●	EC-STR-25

● TO BE PLACED AS DIRECTED BY THE PROJECT ENGINEER.

PHASE 2

UNOFFICIAL SET

NOT FOR BIDDING

COORDINATES ARE NAD/83(1995), ARE DATUM ADJUSTED BY THE FACTOR OF 1.000037524 AND TIED TO THE TGRN. ALL ELEVATIONS ARE REFERENCED TO THE NAVD 1988.

STATE OF TENNESSEE
DEPARTMENT OF TRANSPORTATION

EROSION PREVENTION AND SEDIMENT CONTROL PLAN

GARVER

JLHolbrook 8/6/2014 5:01:30 PM
WORKSPACE: TDOT Bridge
\\gltdc01\LITProjects\2010\100176\0 - TDOT - Bridge Repair over Cypress Creek\Drawings\SR57_EPSC_PH2.dgn

TYPE	YEAR	PROJECT NO.	SHEET NO.
CONST.	2014	55008-3242-04	4C

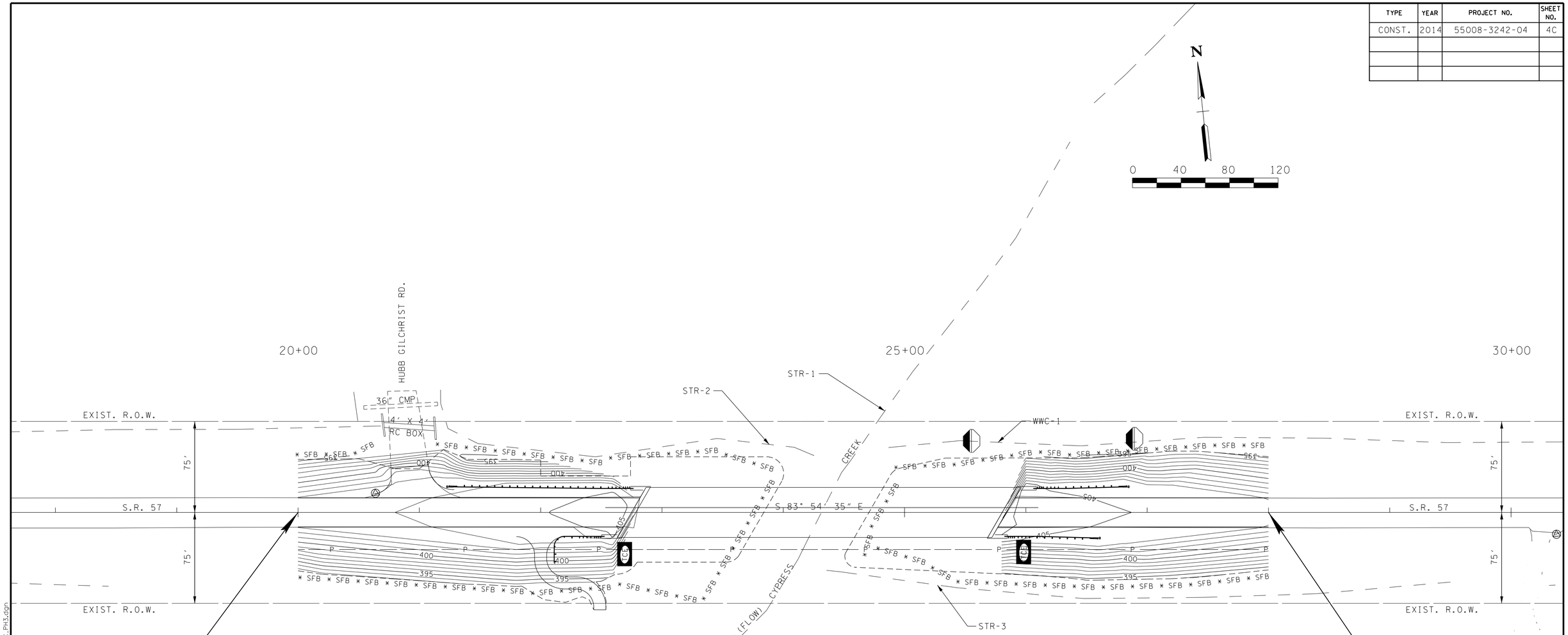

EROSION PREVENTION AND SEDIMENT CONTROL LEGEND		
SYMBOL	ITEM	STD. DWG.
* SFB * SFB * SFB *	SILT FENCE WITH WIRE BACKING	EC-STR-3C
	ENHANCED ROCK CHECK DAM (TRAPEZOIDAL DITCH)	EC-STR-6A
TCE	TEMPORARY CONSTRUCTION EXIT ●	EC-STR-25

● TO BE PLACED AS DIRECTED BY THE PROJECT ENGINEER.

PHASE 3

COORDINATES ARE NAD/83(1995), ARE DATUM ADJUSTED BY THE FACTOR OF 1.000037524 AND TIED TO THE TGRN. ALL ELEVATIONS ARE REFERENCED TO THE NAVD 1988.

UNOFFICIAL SET

NOT FOR BIDDING

STATE OF TENNESSEE
DEPARTMENT OF TRANSPORTATION

EROSION PREVENTION AND SEDIMENT CONTROL PLAN

GARVER

JLHalbrook 8/6/2014 5:03:31PM
WORKSPACE: TDOT Bridge
\\qlfdc01\LITProjects\2010\0017610 - TDOT - Bridge Repair over Cypress Creek\Drawings\SR57_EPSC_PH3.dgn

TYPE	YEAR	PROJECT NO.	SHEET NO.
CONST.	2014	55008-3242-04	4D

ADDITIONAL EROSION PREVENTION AND SEDIMENT CONTROL NOTES

STREAM/WETLAND

(1) A 30 FOOT NATURAL RIPARIAN BUFFER ZONE ADJACENT TO AND ON BOTH SIDES OF THE RECEIVING STREAM SHALL BE PRESERVED, TO THE MAXIMUM EXTENT PRACTICABLE, DURING CONSTRUCTION ACTIVITIES AT THE SITE. BUFFER ZONES ARE NOT SEDIMENT CONTROL MEASURES AND SHOULD NOT BE RELIED UPON AS PRIMARY SEDIMENT CONTROL MEASURES. THE RIPARIAN BUFFER ZONE SHALL BE ESTABLISHED BETWEEN THE TOP OF THE STREAM BANK AND THE DISTURBED CONSTRUCTION AREA. THE 30 FOOT CRITERION FOR THE WIDTH OF THE BUFFER ZONE CAN BE ESTABLISHED ON AN AVERAGE WIDTH BASIS AT A PROJECT, AS LONG AS THE MINIMUM WIDTH OF THE BUFFER ZONE IS MORE THAN 15 FEET AT ANY MEASURED LOCATION. EVERY ATTEMPT SHALL BE MADE FOR CONSTRUCTION ACTIVITIES NOT TO TAKE PLACE WITHIN THE BUFFER ZONES. BEST MANAGEMENT PRACTICES (BMPS) PROVIDING EQUIVALENT PROTECTION AS THE NATURAL RIPARIAN ZONE MAY BE USED. A JUSTIFICATION FOR USE AND DESIGN EQUIVALENCY SHALL BE DOCUMENTED WITHIN THE SWPPP. THE ENVIRONMENTAL AND DESIGN DIVISIONS SHALL REVIEW AND APPROVE THIS REVISION OF THE SWPPP BEFORE DISTURBANCE OF THE SITE PROCEEDS, UNLESS PREVIOUSLY EXEMPT IN THE NPDES CONSTRUCTION GENERAL PERMIT. WHERE ISSUED, ARAP/401 REQUIREMENTS WILL PREVAIL IF IN CONFLICT WITH THESE BUFFER ZONE REQUIREMENTS.

KNOWN EXCEPTIONAL TENNESSEE WATERS

(2) FOR PROJECTS THAT DISCHARGE INTO KNOWN EXCEPTIONAL TENNESSEE WATERS OR WATERS IMPAIRED BY SILTATION, A 60 FOOT NATURAL RIPARIAN BUFFER ZONE ADJACENT TO AND ON BOTH SIDES OF THE RECEIVING STREAM WITH THIS DESIGNATION SHALL BE PRESERVED, TO THE MAXIMUM EXTENT PRACTICABLE, DURING CONSTRUCTION ACTIVITIES AT THE SITE. BUFFER ZONES ARE NOT SEDIMENT CONTROL MEASURES AND SHOULD NOT BE RELIED UPON AS PRIMARY SEDIMENT CONTROL MEASURES. THE RIPARIAN BUFFER ZONE SHALL BE ESTABLISHED BETWEEN THE TOP OF THE STREAM BANK AND THE DISTURBED CONSTRUCTION AREA. THE 60 FOOT CRITERION FOR THE WIDTH OF THE BUFFER ZONE CAN BE ESTABLISHED ON AN AVERAGE WIDTH BASIS AT A PROJECT, AS LONG AS THE MINIMUM WIDTH OF THE BUFFER ZONE IS MORE THAN 30 FEET AT ANY MEASURED LOCATION. EVERY ATTEMPT SHALL BE MADE FOR CONSTRUCTION ACTIVITIES NOT TO TAKE PLACE WITHIN THE BUFFER ZONES. BEST MANAGEMENT PRACTICES (BMPS) PROVIDING EQUIVALENT PROTECTION AS THE NATURAL RIPARIAN ZONE MAY BE USEDWHERE ISSUED, ARAP/401 REQUIREMENTS WILL PREVAIL IF IN CONFLICT WITH THESE BUFFER ZONE REQUIREMENTS.

STORMWATER

(3) NO WORK SHALL BE STARTED UNTIL THE CONTRACTOR'S PLAN FOR THE STAGING OF THEIR OPERATIONS, INCLUDING THE PLAN FOR STAGING OF TEMPORARY AND PERMANENT EPSC MEASURES, HAS BEEN ACCEPTED BY THE ENGINEER. THE CONTRACTOR'S EPSC PLAN SHALL INCORPORATE AND SUPPLEMENT, AS ACCEPTABLE,

(4) THE EPSC MEASURES AND/OR PLAN SHALL BE MODIFIED AS NECESSARY SO THAT THEY ARE EFFECTIVE AT ALL TIMES THROUGHOUT THE COURSE OF THE PROJECT.

(5) THE ACCEPTED EPSC PLAN SHALL REQUIRE THAT EPSC MEASURES BE IN PLACE BEFORE CLEARING, GRUBBING, EXCAVATION, GRADING, CUTTING OR FILLING OCCURS, EXCEPT AS SUCH WORK MAY BE NECESSARY TO INSTALL EPSC MEASURES, INCLUDING WITHOUT LIMITATION AS FOLLOWS:

A. INITIAL CLEARING AND GRUBBING SHALL BE LIMITED TO THAT NECESSARY FOR THE INSTALLATION OF APPLICABLE EPSC MEASURES IN ACCORDANCE WITH THE ACCEPTED EPSC PLAN.

B. NO OTHER CLEARING AND GRUBBING OPERATIONS SHALL BE STARTED BEFORE APPLICABLE EPSC MEASURES ARE IN PLACE IN ACCORDANCE WITH THE ACCEPTED EPSC PLAN.

C. NO CULVERT OR BRIDGE CONSTRUCTION SHALL BE STARTED BEFORE APPLICABLE EPSC MEASURES ARE IN PLACE IN ACCORDANCE WITH THE ACCEPTED EPSC PLAN.

D. NO GRADING, EXCAVATION, CUTTING, FILLING, OR OTHER EARTHWORK SHALL BE STARTED BEFORE EPSC MEASURES ARE IN PLACE IN ACCORDANCE WITH THE ACCEPTED EPSC PLAN.

(6) PERMANENT EPSC MEASURES SHALL BE INITIATED WITHIN 14 CALENDAR DAYS OR CONTRACT TIME FRAMES AFTER FINAL GRADING OF ANY SEQUENCE OR PHASE. TEMPORARY OR PERMANENT STABILIZATION SHALL BE INITIATED WITHIN 14 CALENDAR DAYS OR CONTRACT TIME FRAMES AFTER FINAL GRADING OR WHEN CONSTRUCTION ACTIVITIES ON A PORTION OF THE SITE ARE TEMPORARILY CEASED AND EARTH DISTURBING ACTIVITIES WILL NOT RESUME UNTIL AFTER 14 CALENDAR DAYS OR CONTRACT TIME FRAMES FOR STABILIZATION OF DISTURBED AREA. PERMANENT STABILIZATION WITH PERENNIAL VEGETATION OR OTHER PERMANENTLY STABLE NON-ERODING SURFACE SHALL REPLACE ANY TEMPORARY MEASURES AS SOON AS PRACTICABLE. UNPACKED GRAVEL CONTAINING FINES (SILT AND CLAY SIZED PARTICLES) OR CRUSHER-RUN WILL NOT BE CONSIDERED A NON-ERODIBLE SURFACE.

(7) STEEP SLOPES (A NATURAL OR CREATED SLOPE OF 35% GRADE (2.8H:1V) OR GREATER REGARDLESS OF HEIGHT) SHALL BE TEMPORARILY STABILIZED NO LATER THAN 7 CALENDAR DAYS AFTER CONSTRUCTION ACTIVITY ON THE SLOPE HAS TEMPORARILY OR PERMANENTLY CEASED.

(8) FOR STORMWATER DISCHARGES ASSOCIATED WITH CONSTRUCTION SUPPORT ACTIVITIES; TDOT PROJECTS ARE COVERED UNDER THE "WASTE AND BORROW" MANUAL PER THE SSWMP.

(9) EXCEPT AS OTHERWISE SPECIFIED, THERE ARE NO KNOWN SPECIAL ENVIRONMENTAL FACTORS PRESENT ON THIS PROJECT THAT INDICATE A NEED FOR SEASONAL LIMITATIONS ON THE CLEARING, GRUBBING, EXCAVATION, GRADING, CUTTING OR FILLING OPERATIONS OR ON THE TOTAL AREA OF EXPOSED SOIL.

UTILITY RELOCATION

(10) RAIN WATER WHICH COLLECTS IN THE UTILITY TRENCH SHALL BE PUMPED INTO A DEWATERING STRUCTURE OR SEDIMENT FILTER BAG AND MAINTAINED.

(11) SILT FENCE SHALL BE INSTALLED ON THE DOWNSTREAM SIDE OF STOCKPILED SOIL. TRENCHING ACROSS WET WEATHER CONVEYANCES SHALL BE DONE DURING NO FLOW CONDITIONS AND STABILIZED BY THE END OF THE WORK DAY

(12) UTILITY CROSSINGS FOR STREAMS SHALL BE CONSTRUCTED IN ACCORDANCE WITH TDOT STANDARDS AND NO WORK SHALL BE CONDUCTED IN FLOWING WATERS. TENNESSEE DEPARTMENT OF ENVIRONMENT AND CONSERVATION (TDEC) REGULATIONS APPLY TO UTILITIES IN THIS PROJECT IN REGARD TO EROSION PREVENTION AND SEDIMENT CONTROL (EPSC).

(13) IT IS THE RESPONSIBILITY OF THE STATE UTILITY CONTRACTOR INSTALLER TO PROTECT FROM EROSION EXPOSED EARTH RESULTING FROM THEIR OPERATIONS AND TO PROVIDE FOR CONTAINMENT OF SEDIMENT THAT MAY RESULT FROM THEIR WORK. PRIOR TO BEGINNING WORK, ADEQUATE MEASURES MUST BE IN PLACE TO TRAP ANY SEDIMENT THAT MAY TRAVEL OFF-SITE IN THE EVENT OF RAIN. DURING THE PROGRESSION OF THEIR WORK, EXPOSED EARTH AREAS SHALL BE STABILIZED AS SOON AS POSSIBLE TO PREVENT EROSION. AT NO TIME SHALL EXPOSED EARTH RESULTING FROM THEIR OPERATIONS HAVE UNPROTECTED ACCESS TO FLOWING OFF-SITE AND ENTERING WATERS OF THE STATE/U.S.

(14) FOR THE INSTALLATION OF BURIED UTILITIES (PIPES AND CABLES), TRENCHES SHALL BE BACKFILLED DAILY AS CONSTRUCTION PROCEEDS. BACKFILLED TRENCHES SHALL BE SEEDED AND MULCHED OR SODDED DAILY IF POSSIBLE, BUT NO LATER THAN SEVEN DAYS AFTER BEING BACKFILLED. ANY TEMPORARY SPOIL OF EXCAVATED EARTH SHALL BE LOCATED WITHIN TDOT EROSION PREVENTION AND SEDIMENT CONTROL (EPSC) MEASURES OR RECEIVE SEPARATE EPSC MEASURES. IF TRENCHES ARE NOT BACKFILLED OVERNIGHT, APPROPRIATE EPSC MEASURES WILL BE INSTALLED BY THE STATE UTILITY CONTRACTOR UNTIL SUCH TIME AS THE TRENCH IS BACKFILLED.

(15) IN REGARD TO EROSION PREVENTION AND SEDIMENT CONTROL (EPSC), TENNESSEE DEPARTMENT OF ENVIRONMENT AND CONSERVATION (TDEC) REGULATIONS APPLY TO THE STATE UTILITY CONTRACTORS IN THIS PROJECT, THEREFORE, THE STATE CONTRACTOR SHALL COMPLY WITH ALL APPLICABLE PERMIT REQUIREMENTS AND BEST MANAGEMENT PRACTICES. THE STATE CONTRACTOR IS RESPONSIBLE FOR EPSC MEASURES RELATED TO UTILITY CONSTRUCTION INCLUDED IN THE STATE CONTRACT WORK.

(16) TRENCHES FORMED FOR THE INSTALLATION OF BURIED UTILITIES MAY CAUSE STORM WATER RUNOFF TO CONCENTRATE AT THE TRENCH LINE. ADDITIONAL EROSION PREVENTION AND SEDIMENT CONTROL (EPSC) MEASURES MAY BE REQUIRED TO BE INSTALLED AS APPROVED BY THE TDOT PROJECT ENGINEER.

(17) FOR THE INSTALLATION OF UNDERGROUND UTILITIES OUTSIDE OF THE TDOT RIGHT-OF-WAY, EROSION PREVENTION AND SEDIMENT CONTROL (EPSC) SHALL BE INSTALLED PRIOR TO CLEARING (TRENCHING AND ASSOCIATED BLASTING) IN THOSE AREAS NECESSARY TO PREVENT SEDIMENT FROM LEAVING THE CONSTRUCTION AREA. THESE EPSC MEASURES SHALL REMAIN UNTIL THE BACKFILLED TRENCH IS STABILIZED WITH FINAL VEGETATIVE COVER.

(18) THE UTILITY CONTRACTOR SHALL RESTORE ALL AFFECTED WET WEATHER CONVEYANCES TO THE EXISTING TOPOGRAPHIC CONDITIONS (AS APPROVED BY THE TDOT PROJECT ENGINEER).

(19) THE UTILITY CONTRACTOR WILL PROVIDE APPROPRIATE EROSION PREVENTION AND SEDIMENT CONTROL (EPSC) MEASURES TO REPLACE IN-PLACE EPSC MEASURES REMOVED TO FACILITATE THE INSTALLATION OF UTILITIES. REPLACEMENT OF EPSC MEASURES WILL BE COORDINATED WITH THE TDOT PROJECT ENGINEER BEFORE COMMENCING WORK.

LITTER, DEBRIS, WASTE, PETROLEUM

(21) THE CONTRACTOR SHALL MAINTAIN A COMPLETE AND COMPREHENSIVE EROSION PREVENTION AND SEDIMENT CONTROL PLAN TO PREVENT ROADWAY AND/OR CONSTRUCTION SEDIMENT OR DEBRIS AND ANY PETROLEUM BASED PRODUCTS OR CHLORINATED SOLVENTS, PAINTS OR COATINGS ETC. FROM FALLING ONTO THE RAILROAD'S RIGHTS-OF-WAY AND/OR FROM ENTERING THE DRAINAGE DITCHES OR DRAINAGE STRUCTURES OF THE RAILROAD, AND ANY SEDIMENT OR DEBRIS OR PETROLEUM BASED PRODUCTS OR CHLORINATED SOLVENTS, ETC. THAT DO ENTER SUCH DRAINAGE AREAS OF THE RAILROAD'S RIGHTS-OF-WAY ARE TO BE REMOVED IN ACCORDANCE WITH RULES SET FORTH BY _____ AND AT THE CONTRACTOR'S EXPENSE.

POLYACRYLAMIDE

(22) ENSURE POLYACRYLAMIDE (PAM) EMULSIONS AND POWDERS ARE OF THE ANIONIC TYPE AND MEET THE FOLLOWING REQUIREMENTS:

(23) MEETS THE EPA AND FDA ACRYLAMIDE MONOMER LIMITS OF EQUAL TO OR GREATER THAN 0.005% ACRYLAMIDE MONOMER.

(24) HAS A DENSITY OF 10% TO 55% BY WEIGHT AND A MOLECULAR WEIGHT OF 16 TO 24 MG/MOLE.

(25) MIXTURE IS NON-COMBUSTIBLE.

(26) CONTAINS ONLY MANUFACTURER'S RECOMMENDED ADDITIVES.

(27) PAM SHALL BE MIXED AND APPLIED IN ACCORDANCE WITH ALL OCCUPATIONAL SAFETY AND HEALTH ADMINISTRATION (OSHA) MATERIAL SAFETY DATA SHEET (MSDS) REQUIREMENTS AND THE MANUFACTURER'S RECOMMENDATIONS FOR THE SPECIFIED USES CONFORMING TO ALL FEDERAL, STATE, AND LOCAL LAWS, RULES, AND REGULATIONS.

UNOFFICIAL SET

NOT FOR BIDDING

STATE OF TENNESSEE
DEPARTMENT OF TRANSPORTATION

ADDITIONAL EROSION PREVENTION & SEDIMENT CONTROL NOTES

GARVER

JLHolbrook 8/6/2014 5:03:32 PM
WORKSPACE: TDOT Bridge
L:\2010\00176\0 - TDOT - Bridge Repair over Cypress Creek\Drawings\SR57_EPSC_NOTES 2.dgn

TYPE	YEAR	PROJECT NO.	SHEET NO.
CONST.	2014	55008-3242-04	4E

ADDITIONAL EROSION PREVENTION AND SEDIMENT CONTROL NOTES (CONT.)

STREAM/WETLAND

(28) ALL VENDERS AND SUPPLIERS OF PAM, PAM MIX, OR PAM BLENDS SHALL PRESENT OR SUPPLY A WRITTEN TOXICITY REPORT WHICH VERIFIES THAT THE PAM, PAM MIX, PAM BLEND EXHIBITS ACCEPTABLE TOXICITY PARAMETERS WHICH MEET OR EXCEED THE EPA REQUIREMENTS FOR THE STATE AND FEDERAL WATER QUALITY STANDARDS. WHOLE EFFLUENT TESTING DOES NOT MEET THIS REQUIREMENT AS PRIMARY REACTIONS HAVE OCCURRED AND TOXIC POTENTIALS HAVE BEEN REDUCED. CATIONIC FORMS OF PAM ARE NOT ALLOWED FOR UNDER THIS GUIDELINE DUE TO THEIR HIGH LEVELS OF TOXICITY TO AQUATIC ORGANISMS. PAM EMULSIONS SHALL NEVER BE APPLIED DIRECTLY TO STORMWATER RUNOFF OR RIPARIAN WATERS DUR TO SURFACTANT TOXICITY. CONTRACTOR MUST SEEK THE APPROVAL OF THE EPSC DESIGN ENGINEER AND TDOT IF CHITOSAN IS PROPOSED FOR USE ON THIS PROJECT.

(29) ALL VENDORS AND SUPPLIERS OF PAM, PAM MIX, OR PAM BLENDS SHALL SUPPLY WRITTEN “SITE SPECIFIC” TESTING RESULTS SDEMONSTRATING THAT A PERFORMANCE OF 95% OR GREATER REDUCTION OF NTU OR TSS FROM STORMWATER DISCHARGES.

(30) EMULSION BATCHES SHALL BE MIXED FOLLOWING RECOMMENDATIONS OF A TESTING LABORATORY THAT DETERMINES THE PROPER PRODUCT AND RATE TO MEET SITE REQUIREMENTS. APPLICATION METHOD SHALL ENSURE UNIFORM COVERAGE TO THE TARGET AREA. EMULSIONS SHALL NEVER BE APPLIED DIRECTLY TO STORMWATER RUNOFF OR RIPARIAN WATERS.

(31) PAM POWDER MAY BE APPLIED BY A HAND SPREADER OR A MECHANICAL SPREADER. MIXING PAM POWDER WITH DRY SILICA SAND WILL AID IN SPREADING.

(32) PREMIXING OF PAM POWDER INTO FERTILIZER, SEED, OR OTHER SOIL AMENDMENTS IS ALLOWED WHEN SPECIFIED IN THE DESIGN PLAN. APPLICATION METHOD SHALL ENSURE UNIFORM COVERAGE TO THE TARGET AREA.

(33) PAM LOGS OR BLOCKS SHALL BE APPLIED FOLLOWING SITE TESTING RESULTS TO ENSURE PROPER PLACEMENT AND PERFORMANCE AND SHALL MEET OR EXCEED STATE AND FEDERAL WATER QUALITY REQUIREMENTS.

UNOFFICIAL SET

NOT FOR BIDDING

STATE OF TENNESSEE
DEPARTMENT OF TRANSPORTATION

ADDITIONAL EROSION PREVENTION & SEDIMENT CONTROL NOTES

GARVER

JLHalbrook 8/6/2014 5:11:05 PM
WORKSPACE: TDOT Bridge
L:\2010\1007610 - TDOT - Bridge Repair over Cypress Creek\Drawings\SR57_EPSC_NOTES 3.dgn

TYPE	YEAR	PROJECT NO.	SHEET NO.
CONST.	2014	55008-4241-04	5

FILE NO.

TENNESSEE D.O.T.
DESIGN DIVISION

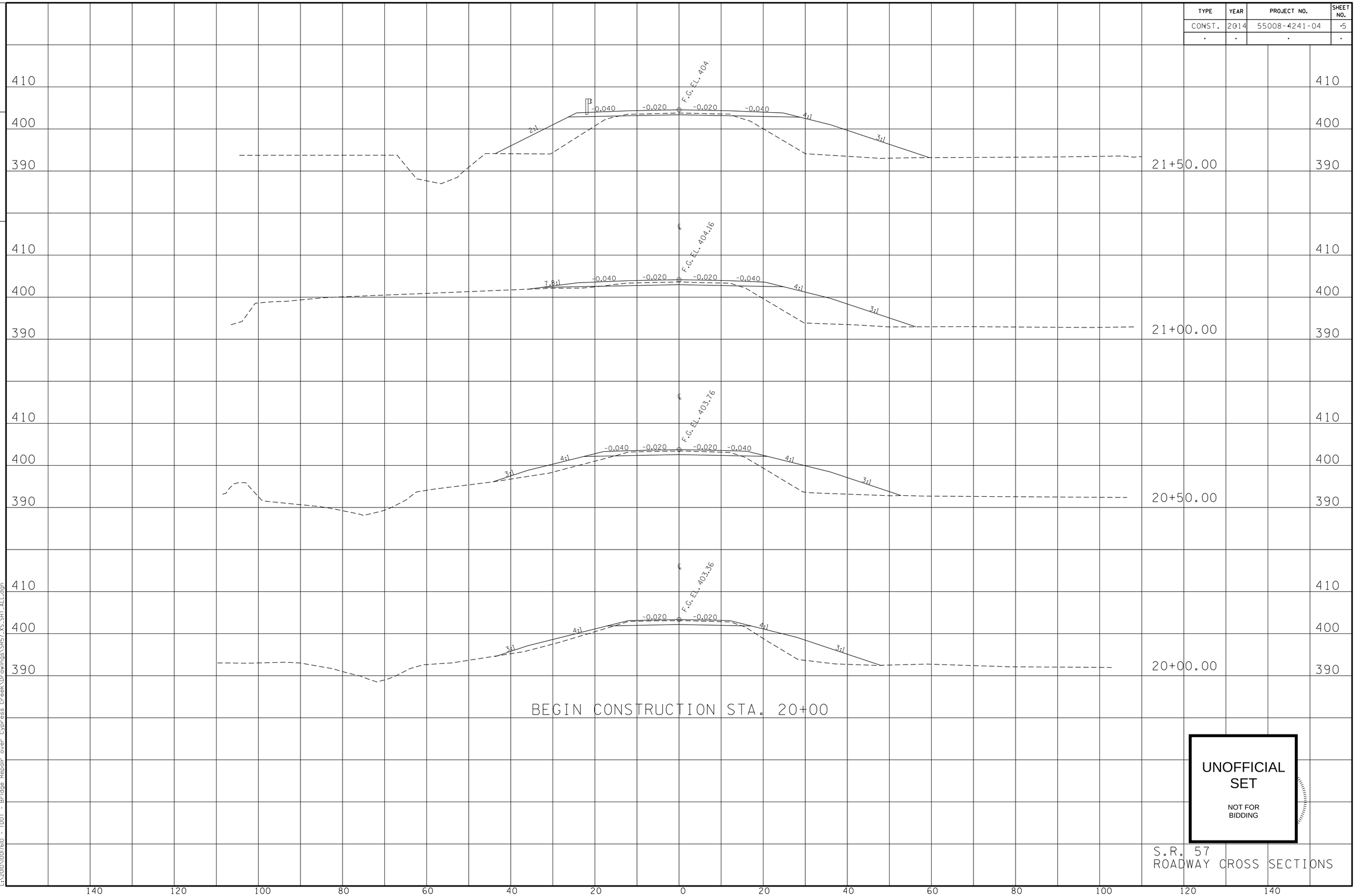

UNOFFICIAL SET

NOT FOR BIDDING

S.R. 57
ROADWAY CROSS SECTIONS

JLHolbrook 8/6/2014 5:11:24 PM
WORKSPACE: TDOT Bridge
L:\2010\00176\0 - TDOT - Bridge Repair over Cypress Creek\Drawings\SR57_XS_SHT_ALL.dgn

TYPE	YEAR	PROJECT NO.	SHEET NO.
CONST.	2014	55008-4241-04	6
.	.	.	.

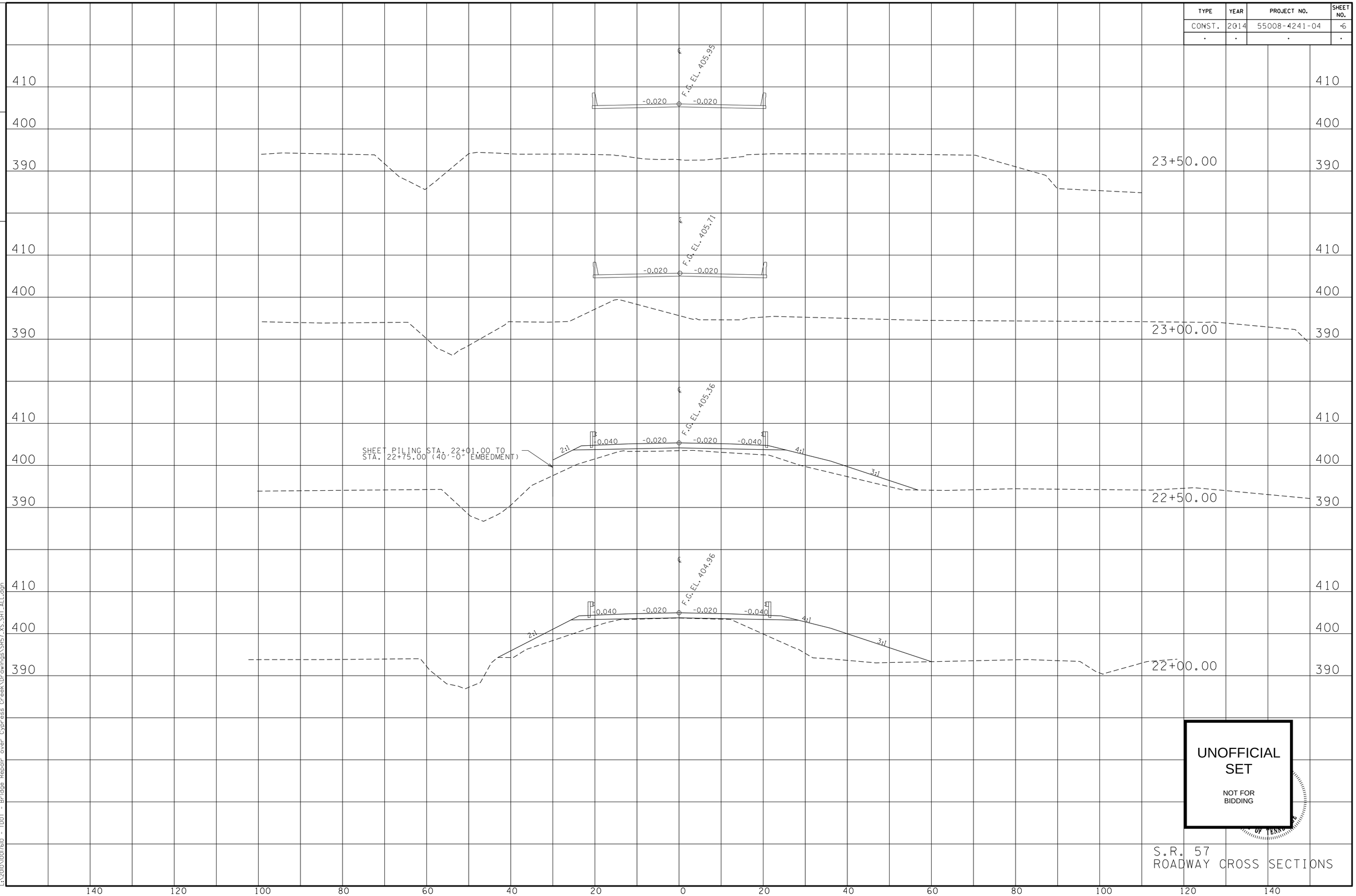

UNOFFICIAL SET

NOT FOR BIDDING

S.R. 57
ROADWAY CROSS SECTIONS

FILE NO.

TENNESSEE D.O.T.
DESIGN DIVISION

JLHalbrook 8/6/2014 5:11:24 PM
WORKSPACE: TDOT Bridge
L:\2010\1007610 - TDOT - Bridge Repair over Cypress Creek\Drawings\SR57_XS_SHT_ALL.dgn

TYPE	YEAR	PROJECT NO.	SHEET NO.
CONST.	2014	55008-4241-04	7

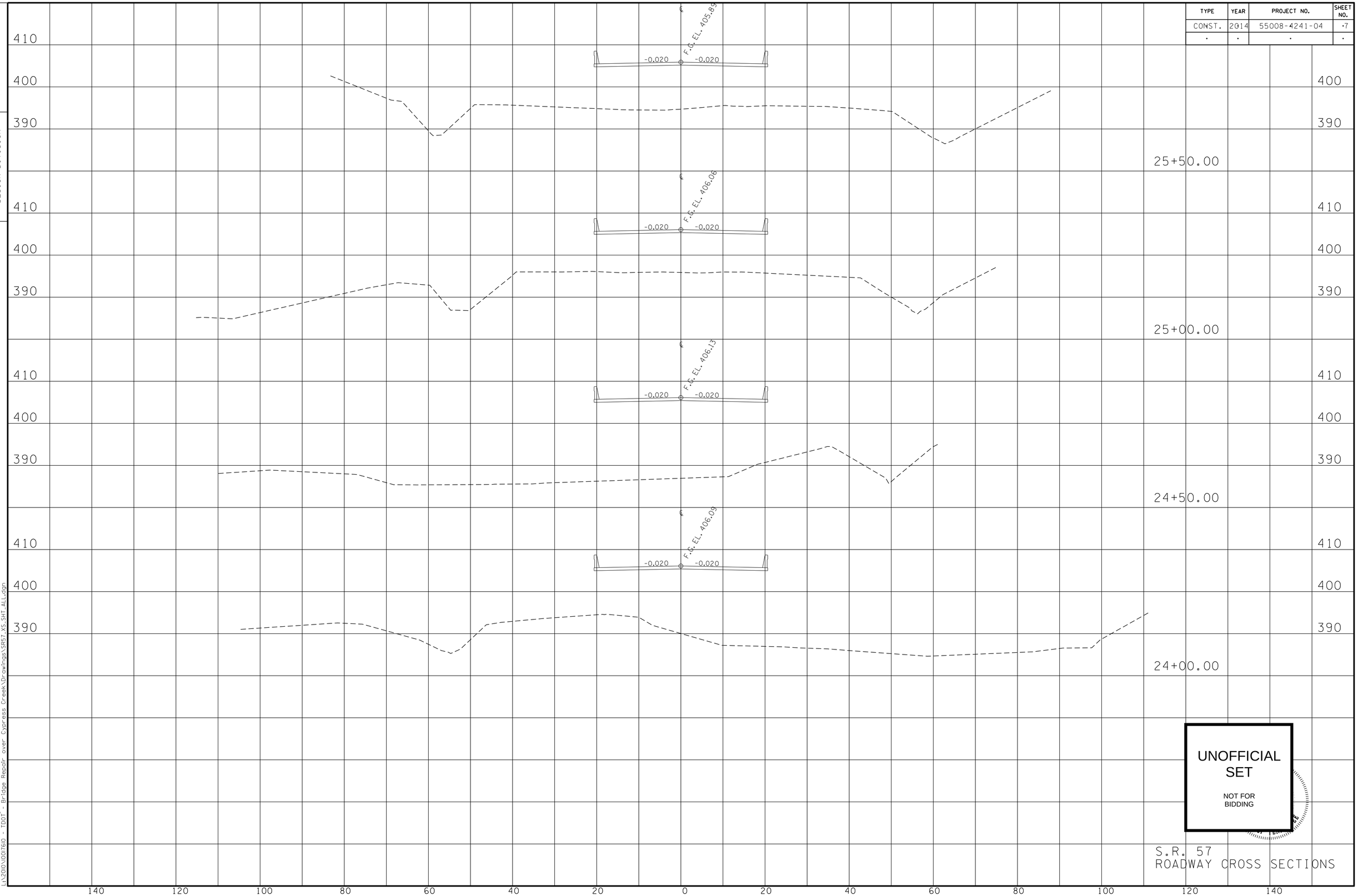

UNOFFICIAL SET

NOT FOR BIDDING

S.R. 57
ROADWAY CROSS SECTIONS

TENNESSEE D.O.T.
DESIGN DIVISION

FILE NO.

JLHolbrook 8/6/2014 5:11:24 PM
WORKSPACE: TDOT Bridge
L:\2010\00176\0 - TDOT - Bridge Repair over Cypress Creek\Drawings\SR57_XS_SHT_ALL.dgn

TYPE	YEAR	PROJECT NO.	SHEET NO.
CONST.	2014	55008-4241-04	8

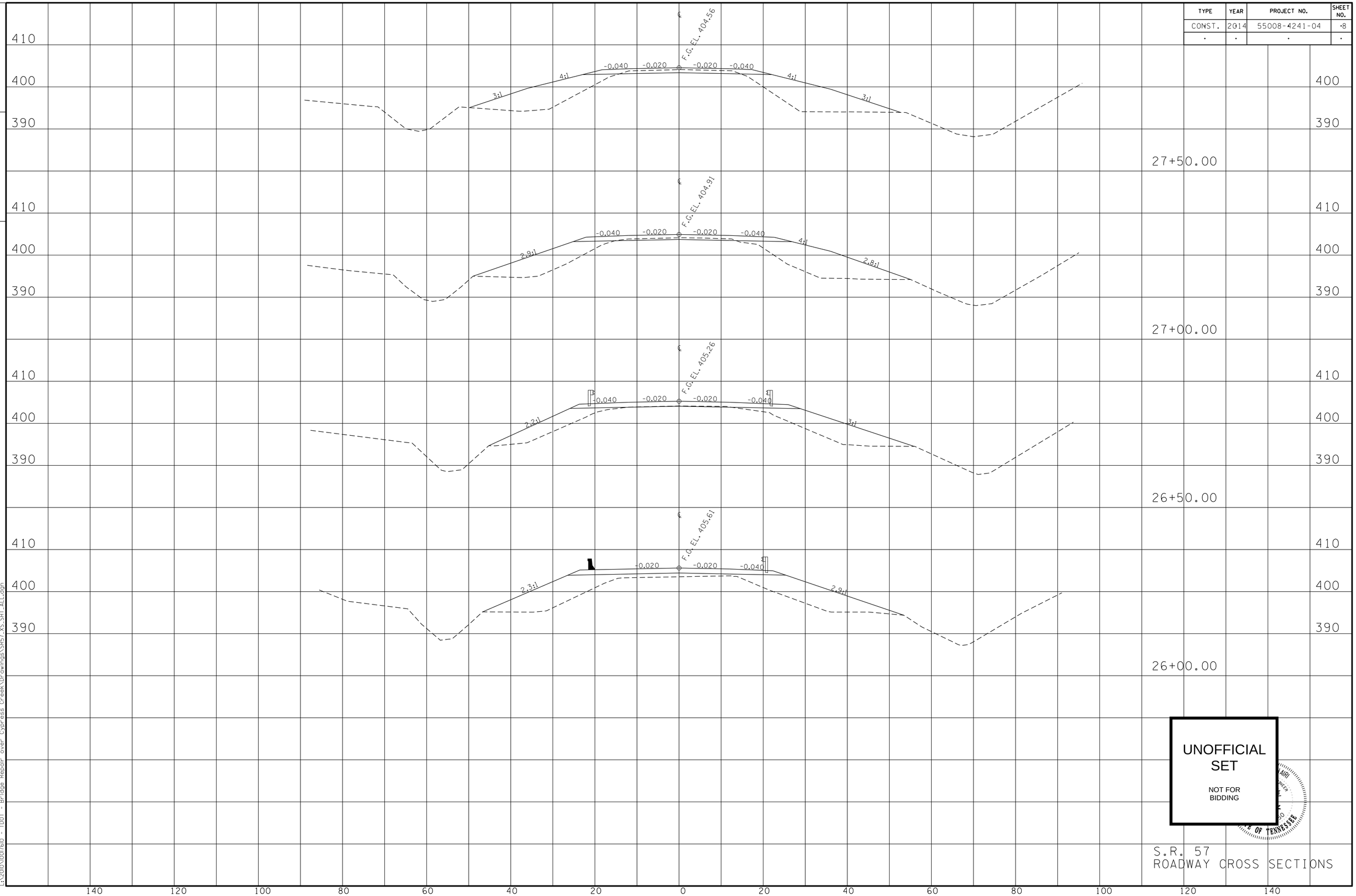

UNOFFICIAL SET

NOT FOR BIDDING

S.R. 57
ROADWAY CROSS SECTIONS

TENNESSEE D.O.T.
DESIGN DIVISION

FILE NO.

JLHalbrook 8/6/2014 5:11:25 PM
WORKSPACE: TDOT Bridge
L:\2010\0007610 - TDOT - Bridge Repair over Cypress Creek\Drawings\SR57_XS_SHT_ALL.dgn

TYPE	YEAR	PROJECT NO.	SHEET NO.
CONST.	2014	55008-4241-04	9

FILE NO.

TENNESSEE D.O.T.
DESIGN DIVISION

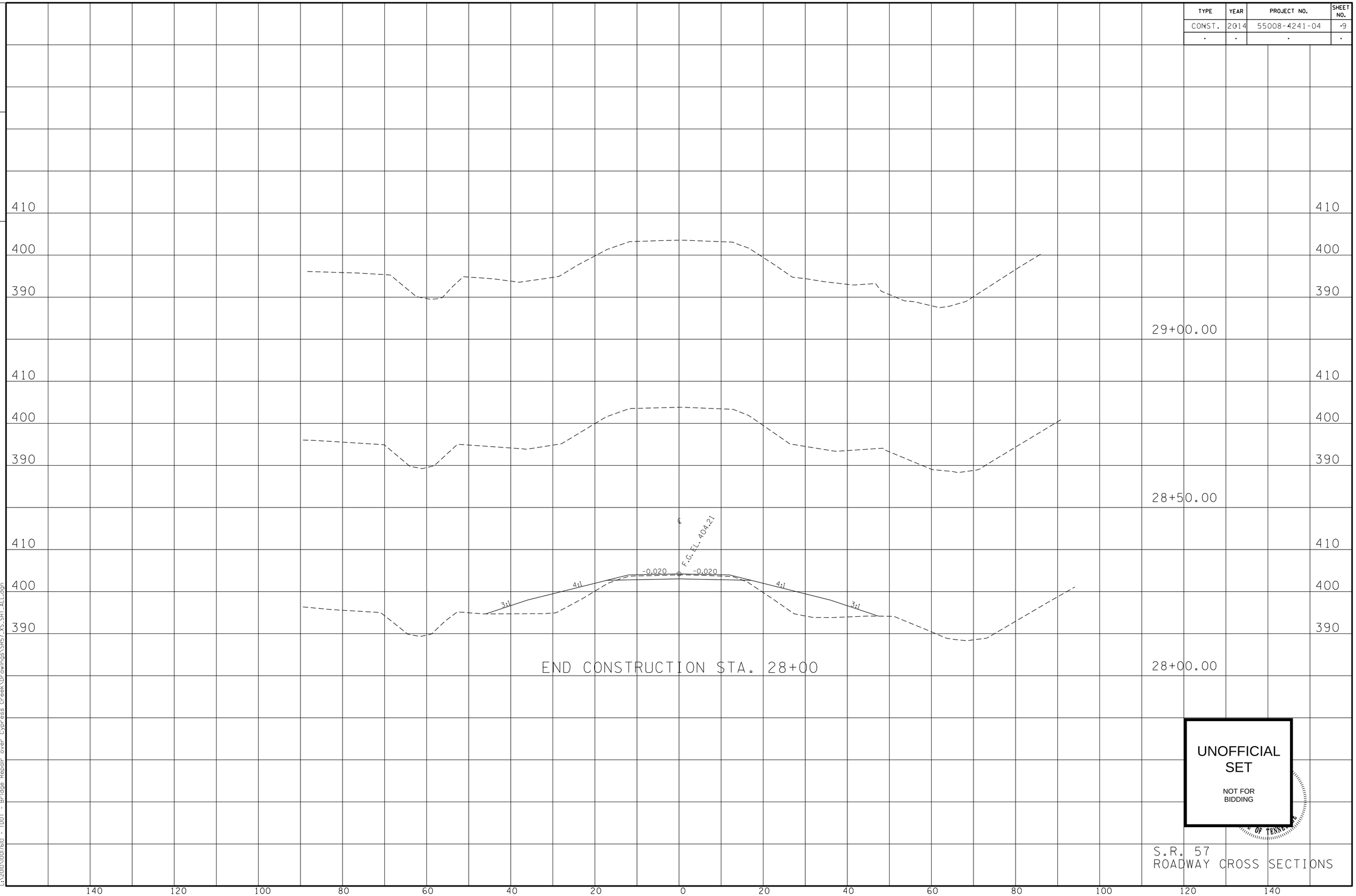

UNOFFICIAL SET

NOT FOR BIDDING

S.R. 57
ROADWAY CROSS SECTIONS

JLHolbrook 8/6/2014 5:41:25 PM
WORKSPACE: TDOT Bridge
L:\2010\0017610 - TDOT - Bridge Repair over Cypress Creek\Drawings\SR57_XS_SHT_ALL.dgn

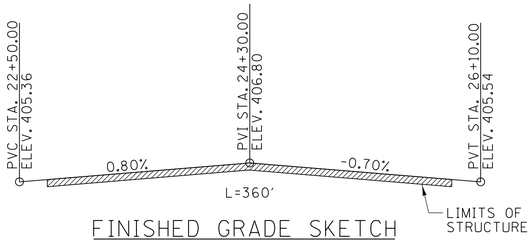

FINISHED GRADE SKETCH
(STATE ROUTE 57)

NOTE:
ANY WORK WITHIN THE STREAM CHANNEL AREA (E.G., FOR PIER FOOTING, RIPRAP PLACEMENT, MULTI-BARREL CULVERT/BRIDGE CONSTRUCTION, ETC.) SHALL BE SEPARATED FROM FLOWING WATER OR EXPECTED FLOW PATH AND PERFORMED DURING LOW FLOW CONDITIONS. ALL ITEMS USED WITHIN THE STREAM CHANNEL AREA FOR DIVERSION OF FLOW (OR EXPECTED FLOW), UNLESS SPECIFIED IN THE PLANS, SHALL NOT BE PAID FOR DIRECTLY BUT SHALL BE INCLUDED IN THE COST OF OTHER ITEMS. THIS NOTE EXCLUDES ANY ITEMS SPECIFIED IN THE PLANS FOR THE TEMPORARY DIVERSION CHANNELS, EC-STR-31 AND TEMPORARY DIVERSION CULVERTS, EC-STR-32 FOR SINGLE BARREL CULVERT CONSTRUCTION.

HYDRAULIC DATA

DRAINAGE AREA	95.0 SQ. MI.
DESIGN DISCHARGE (100 YR)	11031 CFS
TOTAL DESIGN DISCHARGE (100 YR)	14700 CFS
100 YR BACKWATER	0.48 FT. AT ELEV. 395.55
100 YR VELOCITY	8.26 FPS
500 YR DISCHARGE	19400 CFS AT ELEV. 398.01
APPROACH OVERTOPPING ELEVATION	400.50

PROJECT NO.	YEAR	SHEET NO.
55008-3242-04	2014	

REVISIONS

NO.	DATE	BY	BRIEF DESCRIPTION

LEGEND
(F) DENOTES FIXED
(I) DENOTES INTEGRAL

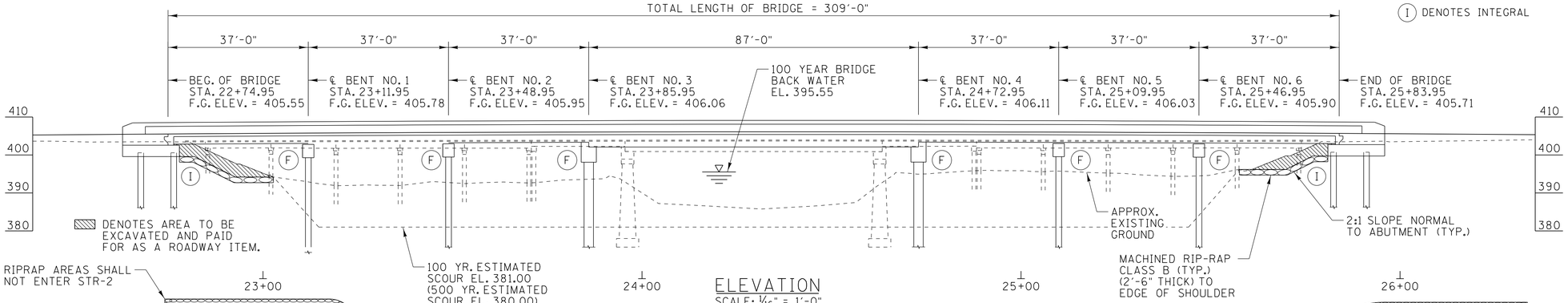

ELEVATION
SCALE: 1/16" = 1'-0"

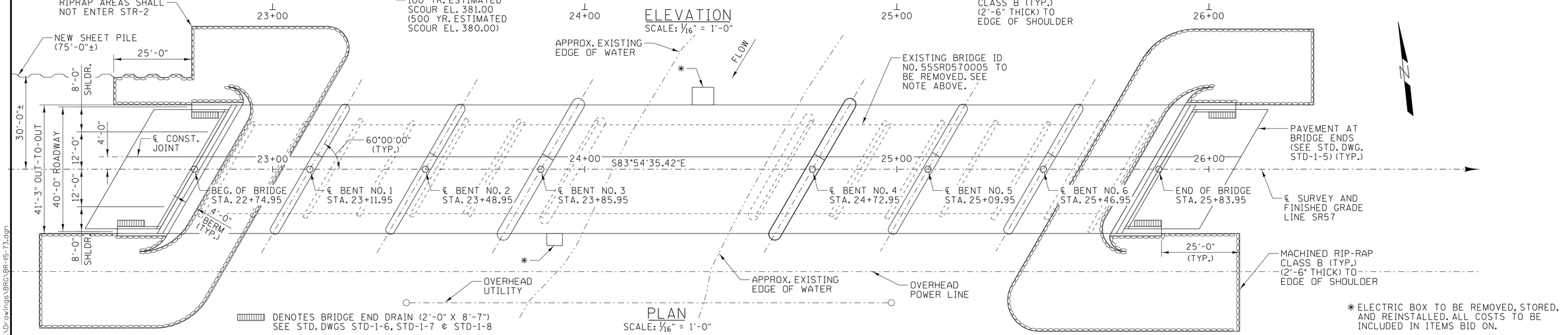

PLAN
SCALE: 1/16" = 1'-0"

LIST OF STANDARD DRAWINGS	DWG. NO.	LAST REV. DATE
BRIDGE RAILING SINGLE SLOPE CONCRETE PARAPET	STD-1-1SS	06-01-11
PAVEMENT AT BRIDGE ENDS	STD-1-5	06-01-11
BRIDGE END DRAIN W/PABE	STD-1-6	04-28-97
BRIDGE END DRAIN W/PABE	STD-1-7	08-24-11
BRIDGE END DRAIN 2' X 8'-7" W/PABE	STD-1-8	05-01-95
BRIDGE MOUNTED INTERCONNECTED PORTABLE BARRIER RAIL	STD-2-1	11-01-10
STD. PRECAST PRESTRESSED BRIDGE DECK PANELS GENERAL DETAILS	STD-4-1	04-08-05
STD. PRECAST PRESTRESSED BRIDGE DECK PANELS DESIGN CRITERIA	STD-4-2	04-08-05
STD. PRECAST PRESTRESSED BRIDGE DECK PANELS GENERAL DETAILS	STD-4-3	03-02-02
STD. PRECAST PRESTRESSED BRIDGE DECK PANELS CONSTRUCTION DETAILS	STD-4-4	06-10-96
STD. PILE DETAILS	STD-5-1	10-25-93
STD. SEISMIC DETAILS	STD-6-1	11-01-10
REINFORCING BAR SUPPORT DETAILS FOR CONCRETE SLABS	STD-9-1	10-07-08
MISCELLANEOUS ABUTMENT AND DRAINAGE DETAILS	STD-10-1	04-08-05
STD. DETAILS FOR PRESTRESSED BOX BEAMS	STD-14-3	10-15-08

LIST OF DRAWINGS	DWG. NO.	LAST REV. DATE
LAYOUT OF BRIDGE	BR-115-73	
GENERAL NOTES AND ESTIMATED QUANTITIES	BR-115-74	
FOUNDATION DATA	BR-115-75	
SEQUENCE OF CONSTRUCTION	BR-115-76	
SEQUENCE OF CONSTRUCTION	BR-115-77	
SEQUENCE OF CONSTRUCTION	BR-115-78	
SUPERSTRUCTURE	BR-115-79	
SUPERSTRUCTURE	BR-115-80	
SUPERSTRUCTURE DETAILS	BR-115-81	
SUPERSTRUCTURE DETAILS	BR-115-82	
SUPERSTRUCTURE DETAILS	BR-115-83	
SUPERSTRUCTURE DETAILS	BR-115-84	
PRESTRESSED BOX BEAM DETAILS	BR-115-85	
PRESTRESSED BOX BEAM DETAILS	BR-115-86	
ABUTMENT NO. 1	BR-115-87	
ABUTMENT NO. 1 DETAILS	BR-115-88	
ABUTMENT NO. 2	BR-115-89	
ABUTMENT NO. 2 DETAILS	BR-115-90	
BENT NOS. 1, 2, 5 & 6	BR-115-91	
BENT NOS. 1, 2, 5 & 6 DETAILS	BR-115-92	
BENT NO 3	BR-115-93	
BENT NO. 4	BR-115-94	
BENT NOS. 3 & 4 DETAILS	BR-115-95	
PIPE PILE DETAILS	BR-115-96	
FINAL FOUNDATION DATA	BR-115-97	
BILL OF STEEL	BR-115-98	
BILL OF STEEL	BR-115-99	

LIST OF SPECIAL PROVISIONS	DWG. NO.	LAST REV. DATE
REPAIR OF BRIDGE DECK CRACKS	604	02-19-96

2034 ADT = 1447
40'-0" ROADWAY WITH STD-1-1SS PARAPET
DESIGN SPEED = 60MPH

UNOFFICIAL SET
NOT FOR BIDDING

STATE OF TENNESSEE
DEPARTMENT OF TRANSPORTATION

LAYOUT OF BRIDGE

STATE ROUTE 57 OVER
CYPRESS CREEK
BRIDGE I.D. NO. 55SR0570005
LOG MILE 8.25
STATION 24+29.45
MCNAIRY COUNTY
2014

GARVER

DESIGNED BY	B.W. STATON	DATE	OCT. 2013
DRAWN BY	H.E.WILLIAMS	DATE	OCT. 2013
SUPERVISED BY	B.W. STATON	DATE	OCT. 2013
CHECKED BY	A. J. KHAIRI	DATE	OCT. 2013

TN D.O.T. ENGINEERING SUPERVISOR M. LAWSON

BR-115-73

JLHolbrook 8/6/2014 5:41:25 PM
WORKSPACE: TDOT Bridge
\\glitdc01\LITProjects\2010\100176\0 - TDOT - Bridge Repair over Cypress Creek\Drawings\BRC\BR-115-73.dgn

GENERAL NOTES

SPECIFICATIONS: STANDARD ROAD AND BRIDGE SPECIFICATIONS OF THE TENNESSEE DEPARTMENT OF TRANSPORTATION (MARCH 1, 2006 EDITION).

LOADING: HL-93 LIVE LOADING; SEISMIC CATEGORY B WITH A_S = 0.227 S_{DS} = 0.516, S_{D1} = 0.251 (1000 YEAR RETURN PERIOD). DEAD LOAD INCLUDES 35 LB./SQ.FT. FOR FUTURE WEARING SURFACE.

DESIGN SPECIFICATIONS: AASHTO LRFD SIXTH EDITION, 2012 WITH INTERIMS AND THE 2011 AASHTO GUIDE SPECIFICATIONS FOR LRFD SEISMIC BRIDGE DESIGN, EDITION 2 (WITH INTERIMS).

CONCRETE: TO BE CLASS "A" (CAST IN PLACE) F'C 3,000 PSI EXCEPT AS NOTED OTHERWISE.

CLASS "D" CONCRETE FOR BRIDGE DECKS SHALL BE IN ACCORDANCE WITH SECTION 604 OF THE STANDARD SPECIFICATIONS.

BRIDGE DECK SURFACE FINISH: TO BE IN ACCORDANCE WITH NOTE "C" IN ARTICLE 604.22 OF THE STANDARD SPECIFICATIONS.

BRIDGE DECK FORMS: BRIDGE DECK FORMS FOR CONCRETE DECKS SHALL BE CONSTRUCTED USING EITHER REMOVABLE FORMS OR PERMANENT FORMS. PERMANENT FORMS MAY BE EITHER REMAIN-IN-PLACE STEEL OR PRECAST, PRESTRESSED CONCRETE PANELS. IN EITHER CASE, FORMS SHALL BE ATTACHED BY MEANS OTHER THAN WELDING TO MAIN STRUCTURAL MEMBERS OR REINFORCING STEEL. TEMPORARY ERECTION DIAPHRAGMS MUST BE USED AT THE ENDS OF PRECAST CONCRETE GIRDERS WHERE END DIAPHRAGMS, SUPPORT DIAPHRAGMS, OR ABUTMENT BACKWALLS ARE TO BE POURED CONCURRENTLY WITH THE DECK AND SHALL BE PROVIDED ELSEWHERE IN ACCORDANCE WITH THE SPECIFICATIONS TO PREVENT GIRDER ROTATION. SEE STANDARD DRAWINGS STD-4-1 THRU 4, STD-14-3 AND ARTICLE 604.05 OF THE STANDARD SPECIFICATIONS.

REINFORCING STEEL: SHALL BE ASTM A615 GRADE 60 UNLESS NOTED OTHERWISE. SEE SECTION 604 AND 607 OF THE STANDARD SPECIFICATIONS.

FRICTION PILES: TO BE 16" PRESTRESSED CONCRETE PILES AT THE ABUTMENTS AND AT BENT NOS. 1, 2, 5 AND 6. AT BENT NOS. 3 AND 4, PILES TO BE STEEL PIPE PILES 30" X ½", GRADE 2, IN ACCORDANCE WITH ASTM A252. A TEST PILE SHALL BE DRIVEN AT EACH SUBSTRUCTURE AT THE LOCATION DESIGNATED ON DRAWING NO. BR-115-97. A LOAD TEST WILL BE APPLIED TO THE TEST PILE AT ABUTMENT NO. 1, BENT NO. 2 AND BENT NO. 4. FROM THE RESULTS OF THE LOAD TEST, THE ENGINEER OF STRUCTURES WILL DETERMINE THE REQUIRED LENGTH OF THE PRODUCTION PILES AND MINIMUM REQUIRED BEARING. FOR PILE DESIGN LOADS AND CUT-OFF ELEVATIONS, SEE TABLE ON THIS SHEET.

THE CONTRACTOR SHALL INSTALL PILING SUCH THAT ALL THE FOLLOWING REQUIRMENTS ARE MET. THE TIP ELEVATION FOR ALL TEST PILES AND PRODUCTION PILES SHALL BE EQUAL TO OR BELOW THE MINIMUM PILE TIP ELEVATION SHOWN ON THE PLANS. IN ADDITION TEST PILES TO BE LOAD TESTED SHALL BE INSTALLED TO AT LEAST THE SPECIFIED BEARING SHOWN ON THE PLANS OR FULL LENGTH; ALL OTHER TEST PILES SHALL BE INSTALLED TO AT LEAST 1.5 TIMES THE SPECIFIED BEARING SHOWN ON THE PLANS OR FULL LENGTH. ALL PRODUCTION PILES SHALL BE INSTALLED FULL LENGTH UNLESS EXCESSIVELY HARD DRIVING WHICH MIGHT DAMAGE THE PILES IS ENCOUNTERED. IF THE PRODUCTION PILES DO NOT ACHIEVE THE MINIMUM REQUIRED BEARING, THE ENGINEER OF STRUCTURES WILL DETERMINE IF ADDITIONAL PILES ARE REQUIRED.

IN THE EVENT THAT DRIVING THE TEST PILE TO AT LEAST THE MINIMUM TIP ELEVATION OR DRIVING THE PRODUCTION PILE FULL LENGTH MIGHT DAMAGE THE PILE BECAUSE OF EXCESSIVELY HARD DRIVING, THE CONTRACTOR SHALL USE OTHER METHODS APPROVED BY THE ENGINEER FOR INSTALLING THE PILES SUCH AS JETTING OR PRE-DRILLING HOLES. HOWEVER, ALL PILES MUST BE DRIVEN BY HAMMER FOR THE LAST FEW FEET OF PENETRATION. NO MEASUREMENT FOR PAYMENT WILL BE MADE FOR PRE-DRILLING HOLES OR FOR JETTING PILING TO OBTAIN THE REQUIRED PILE PENETRATION.

THE PILE LOAD TEST SHALL BE CONDUCTED IN ACCORDANCE WITH THE SPECIFICATIONS. THE PILE LOAD TEST APPARTUS FOR APPLYING LOADS AND MEASURING MOVEMENT SHALL MEET THE REQUIREMENTS OF ASTM D1143, STANDARD METHOD OF TESTING PILES UNDER STATIC AXIAL COMPESSIVE LOAD. WHEN INSUFFICIENT CLEARANCE IS AVAILABLE WITHIN AN EXCAVATION, THE CLEARANCE REQUIRMENTS IN ARTICLE 4.1.1 MAY BE REDUCED, BUT ONLY WITH PRIOR APPROVAL OF THE ENGINEER.

PIPE PILES: SHALL BE PP30" X ½", GRADE 2, IN ACCORDANCE WITH ASTM A252. WEATHERING STEEL WILL NOT BE ALLOWED FOR PIPE PILES. ANY PIPE PILE HAVING BENDS, KINKS OR OTHER DEFORMATIONS DURING THE PROCESS OF DRIVING THAT WOULD IMPAIR THE STRENGTH (10% REDUCTION AS DETERMINED BY ENGINEER) EFFICIENCY OF THE COMPLETED PILE SHALL BE EITHER REMOVED AND REPLACED OR REPAIRED BY THE CONTRACTOR IN A MANNER SATISFACTORY TO THE ENGINEER. THE CONTRACTOR WILL NOT BE REIMBURSED FOR ANY SUCH PIPE PILE ORDERED REMOVED OR REPLACED BY THE ENGINEER.

PILE SPLICES: FULL LENGTH PILES SHALL BE USED WHERE PRACTICABLE. PILES MAY BE SPLICED WITH THE PRIOR APPROVAL OF THE ENGINEER. SPLICES SHALL BE AS DETAILED ON DWG. NO. BR-115-96. ONLY ONE SPLICE PER 40 LINEAR FEET OF PILE WILL BE ALLOWED. DRIVE ON SPLICES SHALL NOT BE USED AND ONLY COMMERCIALLY MANUFACTURED SPLICES WILL BE ALLOWED. SPLICING DETAILS MUST BE SUBMITTED TO THE ENGINEER FOR APPROVAL. COST TO BE INCLUDED IN THE COST OF STEEL PIPE PILES ITEM NO. 606-20.30.

STEEL PIPE PILES SHALL BE PAINTED AS SPECIFIED IN SUBSECTION 606.19 OF THE STANDARD SPECIFICATIONS. THE TOP COAT COLOR SHALL BE GREY, CONFROMING TO FEDERAL STANDARD 595B. INSTEAD OF FIELD PAINTING, STEEL PILES MAY BE SHOP PAINTED PROVIDED THE CONTRACTOR REPAIRS TO THE SATISFACTION OF THE ENGINEER ANY AREAS DAMAGED DUE TO HANDLING OR INSTALLATION.

ALTERNATE PILES: THE CONTRACTOR MAY USE PILING OF A DIFFERENT MATERIAL OR CONFIGURATION FROM THAT SHOWN ON THE PLANS PROVIDED THE SUBSTITUTION MEETS MINIMUM DESIGN STANDARDS AND SPECIFICATIONS AND IS APPROVED BY THE ENGINEER.

BRIDGE RAIL SYSTEM: BUILD BRIDGE RAILINGS ACCORDING TO STANDARD DRAWING STD-1-1SS. THE BRIDGE RAILING SHALL BE FORMED AND CAST PLUMB, NOT PERPENDICULAR TO THE SLAB. THE DIMENSIONS AT THE TRAFFIC FACE SHALL BE KEPT CONSTANT, WITH VARIATION DUE TO CROSS SLOPE ACCOMMODATED AT THE REAR FACE.

NOTE: THE CONTRACTOR SHALL PROVIDE 100% CONVENTIONAL FALL PROTECTION FOR WORKERS INSTALLING DECKING ABOVE 15 FEET.

SHOP DRAWINGS: SEE SECTION 105.02 OF THE STANDARD SPECIFICATIONS.

RIP-RAP: MACHINED RIP-RAP SHALL BE CLASS "B" IN ACCORDANCE WITH SECTION 709 OF THE STANDARD SPECIFICATIONS AND SHALL BE MEASURED AND PAID FOR UNDER ROADWAY ITEM 709-05.08.

VALUE ENGINEERING ALTERNATE BRIDGE DESIGN CRITERIA: ALTERNATE BRIDGE DESIGN PROPOSALS MAY NOT DIMINISH THE FUNCTIONAL OR STRUCTURAL EQUIVALENCY OF THE BRIDGE AND MUST MEET OR EXCEED BOTH THE SERVICE LEVEL AND ULTIMATE CAPACITIES OF THE CONTRACT PLANS STRUCTURE. ADDITIONALLY, THE WATERWAY OPENING AND FLOOD CLEARANCES MAY NOT BE REDUCED.

NOTE: IN ADDITION TO THE SURFACES SHOWN IN THE APPLIED TEXTURE FINISH SKETCH ALL EXPOSED SURFACES OF THE BENT, WINGWALLS, ABUTMENTS AND EXTERIOR PORTIONS OF ENDWALLS ARE TO RECEIVE AN APPLIED TEXTURE FINISH (MOUNTAIN GREY, FED. SPEC. NO. 36440).

FINISHING CONCRETE SURFACES: CONCRETE FINISHING SHALL BE IN ACCORDANCE WITH SECTION 604.21 OF THE TENNESSEE STANDARD SPECIFICATIONS. A CLASS I FINISH FOLLOWED BY AN APPLIED TEXTURE FINISH SHALL BE USED IN LIEU OF A CLASS II FINISH. NO TEXTURE FINISH SHALL BE APPLIED PRIOR TO COMPLETION OF PAVING AND HAULING OPERATIONS AT THE BRIDGE SITE. THE APPLIEDTEXTURE FINISH SHALL BE MEASURED AND PAID FOR UNDER ITEM 604-04.01.

PROJECT NO.	YEAR	SHEET NO.
55008-3242-04	2014	

REVISIONS

NO.	DATE	BY	BRIEF DESCRIPTION

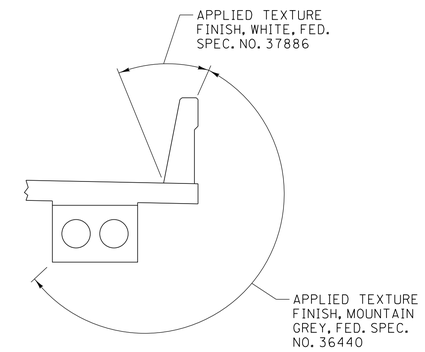

APPLIED TEXTURE FINISH SKETCH

(TYPICAL AT CANTILEVER)

ESTIMATED QUANTITIES

	ITEM NO.	DESCRIPTION	UNIT	TOTAL	SUPERSTRUCTURE	ABUT. NO. 1	BENT NO. 1	BENT NO. 2	BENT NO. 3	BENT NO. 4	BENT NO. 5	BENT NO. 6	ABUT. NO. 2
1	202-04.01	REMOVAL OF STRUCTURES (EXT.BR.NO.55-SR57-8.25)	L.S.	1									
2	204-02.01	DRY EXCAVATION (BRIDGES)	C.Y.	110		55							55
3	303-01.02	GRANULAR BACKFILL (BRIDGES)	TON	100		50							50
4	604-02.03	EPOXY COATED REINFORCING STEEL	LB.	115,649	113,226	1,215							1,208
5	604-03.01	CLASS "A" CONCRETE (BRIDGES)	C.Y.	232		43	19	19	35	35	19	19	43
4	604-03.02	STEEL BAR RIENFORCEMENT (BRIDGES)	LB.	32,995	3,440	5,495	2,617	2,617	4,056	4,056	2,617	2,617	5,480
6	604-03.04	PAVEMENT AT BRIDGE ENDS	S.Y.	204		102							102
	604-03.09	CLASS "D" CONCRETE (BRIDGE DECK)	C.Y.	403	403								
	604-04.01	APPLIED TEXTURE FINISH (NEW STRUCTURES)	S.Y.	1,036	530	66	54	54	79	79	54	54	66
	604-04.03	BRIDGE END DRAINS	EA.	4		2							2
15	604-05.31	BRIDGE DECK GROOVING (MECHANICAL)	S.Y.	1,461									
	606-10.01	TEST PILES (PRECAST CONCRETE) SIZE 2	L.F.	330		50	60	60			55	55	50
	606-10.02	LOADING TEST (PRECAST CONCRETE) SIZE 2	EA	2		1		1					
7	606-10.03	PRECAST CONCRETE PILES (SIZE 2)	L.F.	1,780		320	300	300			270	270	320
	606-12.01	PILE ANCHORAGE SYSTEM (SEISMIC)	EA.	46		7	8	8			8	8	7
	606-20.10	TEST PILES (STEEL PIPE PILES, 30-INCH)	L.F.	120					60	60			
	606-20.20	LOADING TEST (STEEL PIPE PILES, 30-INCH)	EA.	1						1			
8	606-20.30	STEEL PIPE PILES (30-INCH)	L.F.	600					300	300			
14	606-20.60	PILE TIPS-STEEL PIPE PILES (30-INCH)	EA.	14					7	7			
9	615-02.19	PRESTRESSED CONCRETE BOX BEAM (24"X36")	L.F.	1,051									
9	615-02.25	PRESTRESSED CONCRETE BOX BEAM (39"X48")	L.F.	427									
10	617-02	BRIDGE DECK CRACKING SEAL	L.F.	357									
11	617-05	SEALANT (HMWM)	GAL.	4									
	620-05.01	CONCRETE PARAPET SINGLE SLOPE (STD-1-1SS)	L.F.	676									
12	710-09.01	6" PREFORATED PIPE WITH VERTICAL DRAIN SYSTEM	L.F.	130		65							65
	710-09.02	6" PIPE UNDERDRAIN	L.F.	48		24							24

PILE DATA TABLE

LOCATION	DESIGN LOAD (TON)	TEST PILE CUT-OFF ELEV. (P.C.O.) (FEET)	ESTIMATED PILE LENGTH (FEET)	TEST PILE LENGTH (FEET)	MINIMUM PILE TIP ELEVATION (FEET)
ABUTMENT NO. 1	85	399.62	40	50	361.0
BENT NO. 1	115	399.84	50	60	360.0
BENT NO. 2	115	400.03	50	60	360.0
BENT NO. 3	195	398.41	50	60	359.0
BENT NO. 4	195	398.47	50	60	359.0
BENT NO. 5	115	400.12	45	55	360.0
BENT NO. 6	115	399.97	45	55	360.0
ABUTMENT NO. 2	85	399.79	40	50	363.0

(1) NOTE: LUMP SUM = TO INCLUDE COMPLETE REMOVAL OF EXISTING BRIDGE NO. 55-SR57-8.25 AND APPROACHES TO 1'-0" BELOW NATURAL GROUND BETWEEN STA. 22+79 TO STA. 25+80.

(2) NOTE: EXCAVATION BASED ON FINAL PROFILE AT ABUTMENTS.

(3) NOTE: GRANULAR BACKFILL SHALL BE CLASS "A" GRADING "D" MATERIAL SEE STD. DWG. STD-10-1.

(4) NOTE: MECHANICAL BAR SPLICERS MUST BE ON THE APPROVED LIST, DIVISION OF MATERIALS AND TESTS, AND SHALL MEET AASHTO LRFD SPECIFICATIONS FOR MECHANICAL CONNECTION. THE COST OF FURNISHING BAR SPLICERS, INCLUDING ALL MATERIAL AND LABOR FOR INSTALLATION, SHALL BE INCLUDED IN THE UNIT PRICE BID FOR ITEM NOS. 604-02.03 AND 604-03.02.

(5) NOTE: THE COST OF ALL MATERIALS AND LABOR NECESSARY FOR THE INSTALLATION OF 120 ANCHOR BOLT ASSEMBLIES SHALL BE INCLUDED IN THE UNIT PRICE BID FOR CLASS "A" CONCRETE (BRIDES), ITEM NO. 604-03.01.

(6) NOTE: PRIOR TO CONSTRUCTION OF THE PAVEMENT AT BRIDGE ENDS, THE CONTRACTOR SHALL SUBMIT A PROPOSED BILL OF STEEL TO THE ENGINEER FOR APPROVAL.

(7) NOTE: COST OF PREPARATION OF THE TOP OF PILE FOR SEISMIC REQUIREMENTS SHALL BE INCLUDED IN THE UNIT PRICE BID FOR ITEM NO. 606-12.01. SEE STD. DWG. STD-6-1 FOR DETAILS. THE PILE AND TEST PILE LENGTHS SHOWN ON THE PLANS DO NOT INCLUDE THE 2 FEET REQUIRED FOR SEISMIC ATTACHMENT.

(8) NOTE: THE COST OF ALL MATERIALS AND LABOR NECESSARY FOR THE INSTALLATION OF STEEL PIPE PILES, INCLUDING CONCRETE FILL AND EMBEDED REINFORCING CAGE AND PAINTING, SHALL BE INCLUDED IN THE UNIT PRICE BID FOR STEEL PIPE PILES (30-INCH), ITEM NO. 606-20.30. THIS ITEM DOES NOT INCLUDE THE COST OF FURNISHING OR INSTALLING PILE TIPS.

(9) NOTE: COST OF ELASTOMERIC BEARING PADS AND RUBBER BONDING CEMENT TO BE INCLUDED IN THE UNIT PRICE BID FOR THE PRESTRESSED BEAM.

(10) NOTE: INCLUDES ALL COST FOR INSTALLING THE BRIDGE DECK CRACK SEALER (HMWM) INCLUDING CRACK PREPARATION, CLEANING, LABOR, SAND AND ALL MISCELLANEOUS MATERIAL REQUIRED TO SEAL CRACK ALONG THE LONGITUDINAL PHASE CONSTRUCTION JOINT FROM BEGINNING OF BRIDGE TO THE END OF BRIDGE ACCORDING TO SPECIAL PROVISION 604CR AND THE MANUFACTURES SPECIFICATIONS. THIS ITEM DOES NOT INCLUDE THE COST OF FURNISHING THE BRIDGE DECK CRACK SEALER.

(11) NOTE: INCLUDES THE COST OF FURNISHING THE SEALER MATERIAL (HMWM) FOR SEALING THE CRACK ALONG THE LONGITUDINAL PHASE CONSTRUCTION JOINT FROM BEGINNING OF BRIDGE TO THE END OF BRIDGE. THE SEALER (HMWM) SHALL BE IN ACCORDANCE WITH SPECIAL PROVISION 604CR. QUANTITIES FOR THIS ITEM MAY BE INCREASED OR DECREASED BY THE TDOT ENGINEER.

(12) NOTE: THE COST OF POLYETHENE SHEETING AND ALL MISCELLANEOUS ITEMS NECESSARY FOR INSTALLATION TO BE INCLUDED IN THE UNIT PRICE BID FOR PERFORATED PIPE.

(13) NOTE: THE COST OF BITUMINOUS FIBER BOARD AND ALL MISCELLANEOUS JOINT MATERIALS TO BE INCLUDED IN THE UNIT PRICE BID FOR OTHER ITEMS.

(14) NOTE: PILE TIPS MUST BE ON THE APPROVED LIST, DIVISION OF MATERIAL AND TESTS. THE UNIT PRICE BID FOR THE PILE TIPS SHALL INCLUDE FURNISHING AND INSTALLATION TO THE PILES.

(15) NOTE: INCLUDES THE COST OF GROOVING BRIDGE DECK AND PAVEMENT AT BRIDGE ENDS.

GARVER

DESIGNED BY B.W. STATON DATE OCT. 2013
DRAWN BY H.E. WILLIAMS DATE OCT. 2013
SUPERVISED BY B.W. STATON DATE OCT. 2013
CHECKED BY A. J. KHAIRI DATE OCT. 2013

TN D.O.T. ENGINEERING SUPERVISOR M. LAWSON

UNOFFICIAL SET

NOT FOR BIDDING

STATE OF TENNESSEE
DEPARTMENT OF TRANSPORTATION

GENERAL NOTES AND ESTIMATED QUANTITIES

STATE ROUTE 57 OVER
CYPRESS CREEK
BRIDGE I.D. NO. 55SR0570005
LOG MILE 8.25
STATION 24+29.45
MCNAIRY COUNTY
2014

BR-115-74

JLHalbrook 8/6/2014 5:11:26 PM
WORKSPACE: TDOT Bridge
\\gltdc01\LITProjects\2010\00176\0 - TDOT - Bridge Repair over Cypress Creek\Drawings\BRG\BR-115-74.dgn

PROJECT NO.	YEAR	SHEET NO.
55008-3242-04	2014	

REVISIONS

NO.	DATE	BY	BRIEF DESCRIPTION

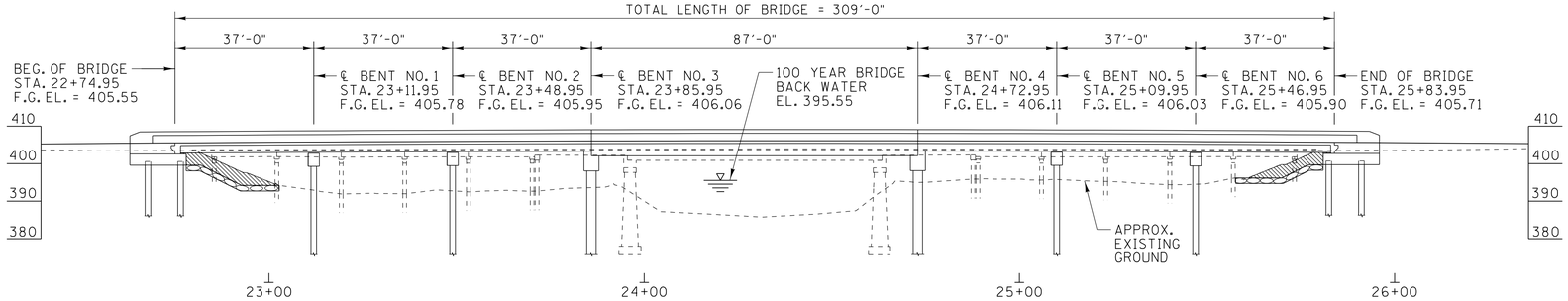

ELEVATION
SCALE: 1" = 20'-0"

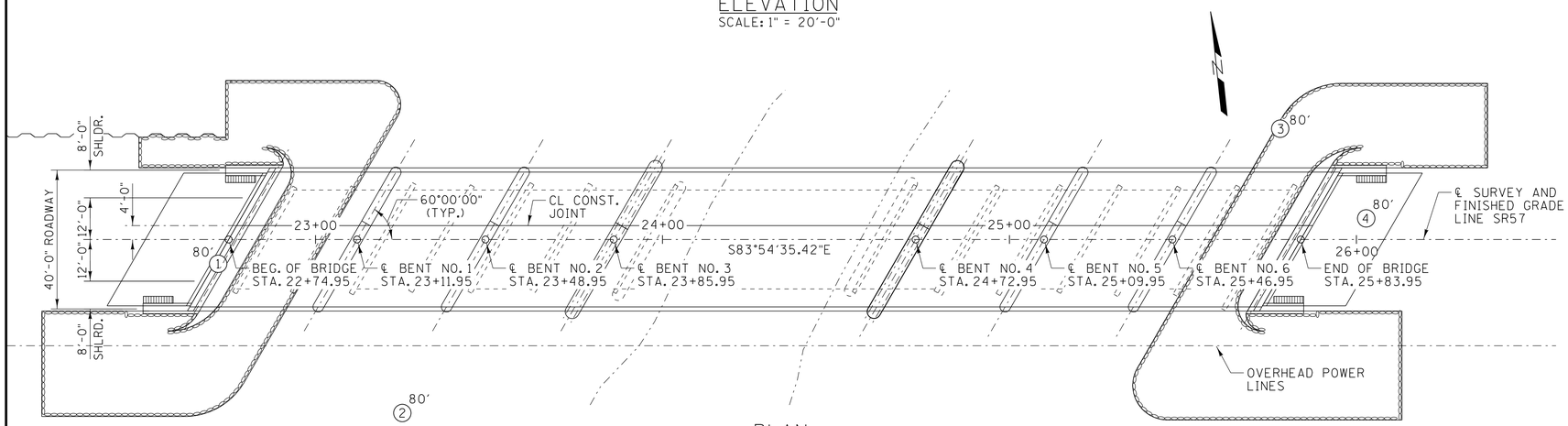

PLAN
SCALE: 1" = 20'-0"

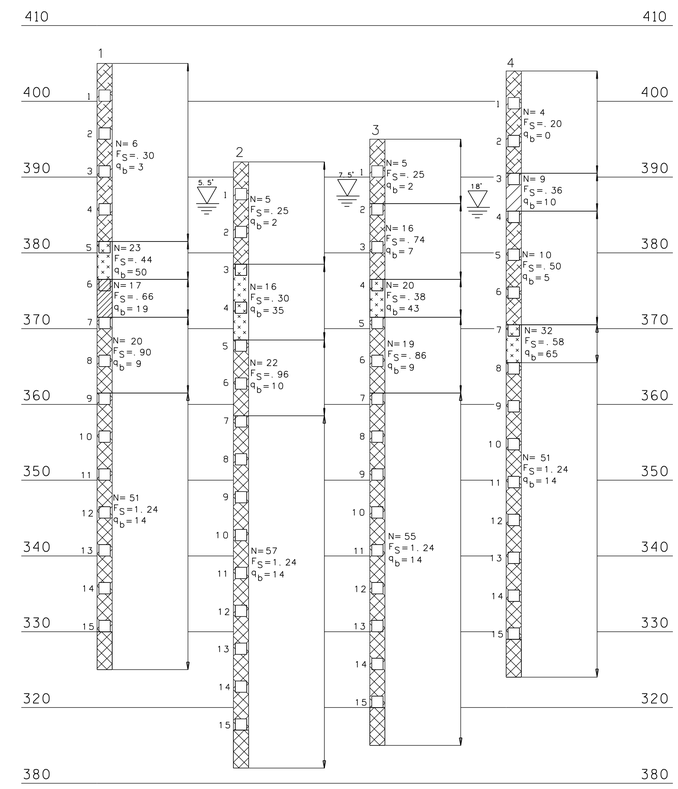

LEGEND

- LEAN CLAY
- FAT CLAY
- SILT
- SAND

80.0' —— TERMINATED DEPTH

HOLE NO. — 1

SPLIT SPOON SAMPLE NO. — 1

5.5' WATER TABLE

BORING NO.	STATION	OFFSET	GROUND ELEV.	ROCK ELEV.	TOTAL DEPTH
1	22+72	7' RT.	405.0	-	80'
2	23+25	50' RT.	392.0	-	80'
3	25+78	32' LT.	395.0	-	80'
4	26+03	6' RT.	404.0	-	80'

N = AVERAGE N VALUE FOR INTERVAL SHOWN

F_s AND q_b VALUES SHOWN ARE FOR DRIVEN CONCRETE PILES ONLY.

GARVER

DESIGNED BY B.W. STATON DATE OCT. 2013
DRAWN BY H.E.WILLIAMS DATE OCT. 2013
SUPERVISED BY B.W. STATON DATE OCT. 2013
CHECKED BY A. J. KHAIRI DATE OCT. 2013

TN D.O.T. ENGINEERING SUPERVISOR M. LAWSON

UNOFFICIAL SET

NOT FOR BIDDING

STATE OF TENNESSEE
DEPARTMENT OF TRANSPORTATION

FOUNDATION DATA

STATE ROUTE 57 OVER
CYPRESS CREEK
BRIDGE I.D. NO. 55SR0570005
LOG MILE 8.25
STATION 24+29.45
MCNAIRY COUNTY
2014

BR-115-75

JLHalbrook 8/6/2014 5:11:26 PM
WORKSPACE: TDOT Bridge
\\gltdc01\LTProjects\2010\10017610 - TDOT - Bridge Repair over Cypress Creek\Drawings\BRG\BR-115-75.dgn

PROJECT NO.	YEAR	SHEET NO.
55008-3242-04	2014	

REVISIONS

NO.	DATE	BY	BRIEF DESCRIPTION

□ INTERCONNECTED PORTABLE BARRIER RAIL SHALL BE MOUNTED TO BRIDGE. SEE STD. DWG. STD-2-1 FOR DETAILS.

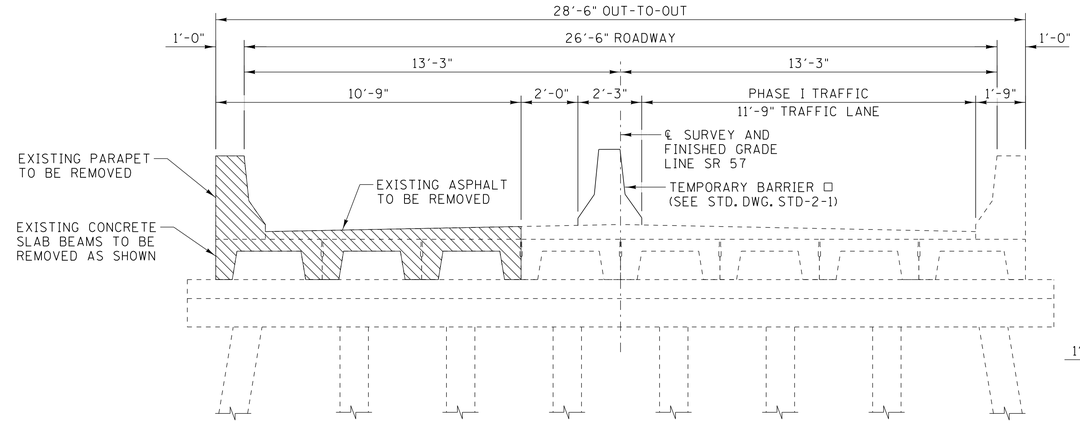

PHASE I DEMOLITION

(LOOKING AHEAD ON SURVEY)
SCALE: 3/8" = 1'-0"

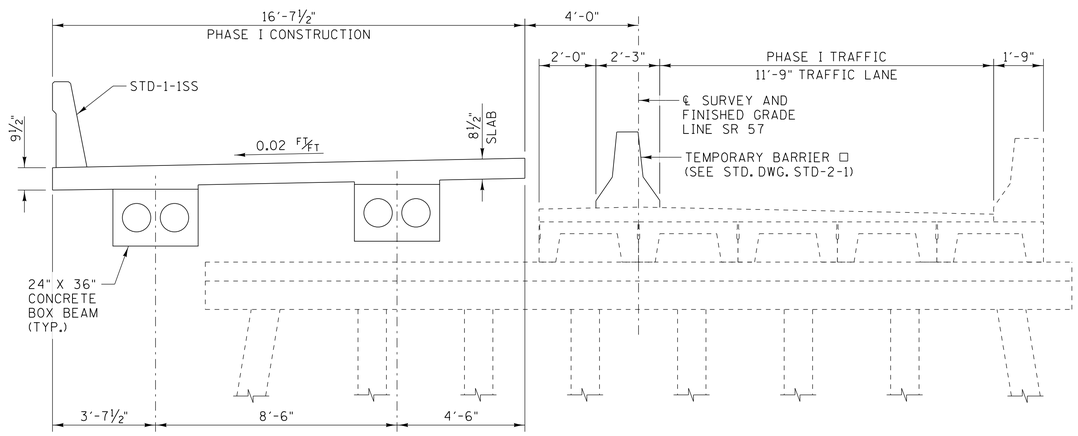

PHASE I CONSTRUCTION

(LOOKING AHEAD ON SURVEY)
SCALE: 3/8" = 1'-0"

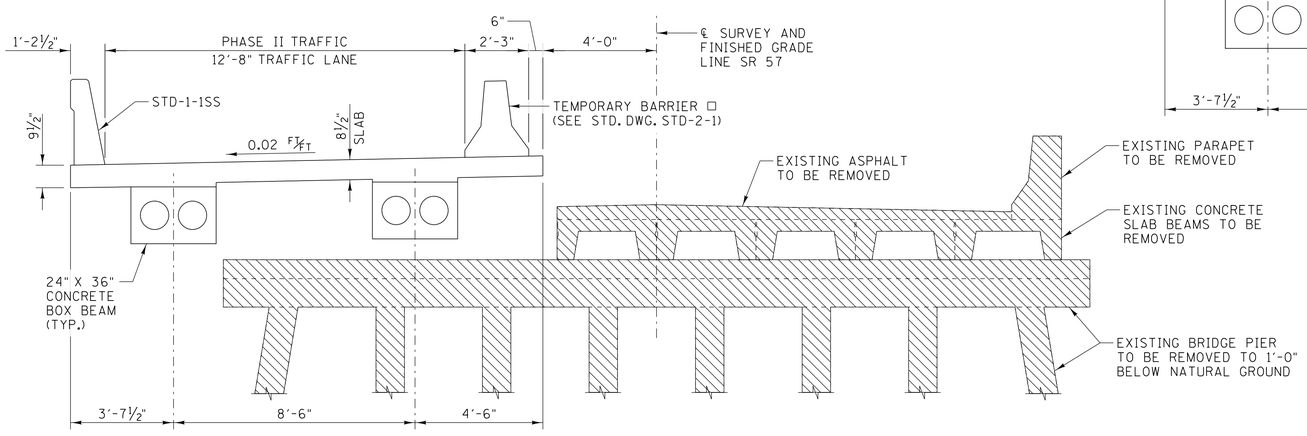

PHASE II DEMOLITION

(LOOKING AHEAD ON SURVEY)
SCALE: 3/8" = 1'-0"

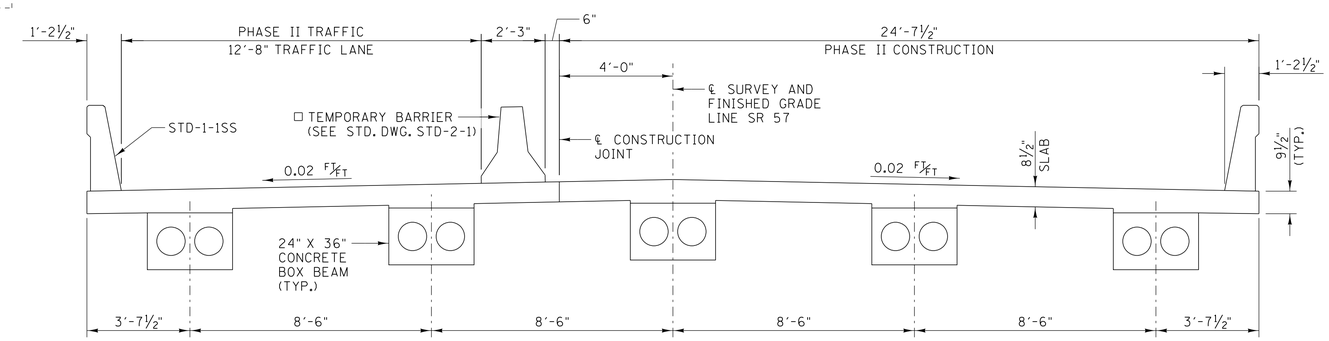

PHASE II CONSTRUCTION

(LOOKING AHEAD ON SURVEY)
SCALE: 3/8" = 1'-0"

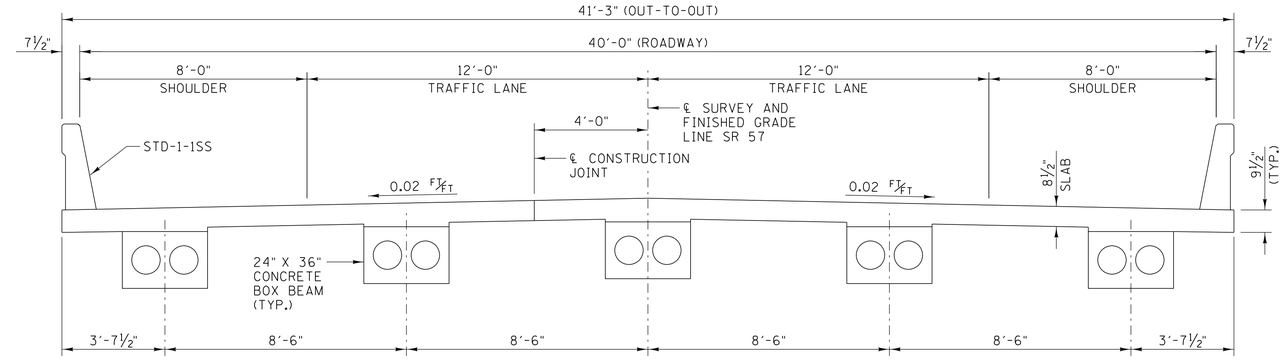

TYPICAL SECTION

(LOOKING AHEAD ON SURVEY)
SCALE: 3/8" = 1'-0"

UNOFFICIAL SET

NOT FOR BIDDING

STATE OF TENNESSEE
DEPARTMENT OF TRANSPORTATION
SEQUENCE OF CONSTRUCTION
(EXISTING SPAN NOS. 1-5 & 9-13)
STATE ROUTE 57 OVER
CYPRESS CREEK
BRIDGE I.D. NO. 55SR0570005
LOG MILE 8.25
STATION 24+29.45
MCNAIRY COUNTY
2014

GARVER

DESIGNED BY	B.W. STATON	DATE	OCT. 2013
DRAWN BY	H.E. WILLIAMS	DATE	OCT. 2013
SUPERVISED BY	B.W. STATON	DATE	OCT. 2013
CHECKED BY	A. J. KHAIRI	DATE	OCT. 2013

TN D.O.T. ENGINEERING SUPERVISOR M. LAWSON

BR-115-76

JLHalbrook 8/6/2014 5:11:27 PM
WORKSPACE: TDOT Bridge
\\glfdc01\LITProjects\2010\10017610 - TDOT - Bridge Repair over Cypress Creek\Drawings\BRG\BR-115-76.dgn

PROJECT NO.	YEAR	SHEET NO.
55008-3242-04	2014	

REVISIONS

NO.	DATE	BY	BRIEF DESCRIPTION

□ INTERCONNECTED PORTABLE BARRIER RAIL SHALL BE MOUNTED TO BRIDGE. SEE STD. DWG. STD-2-1 FOR DETAILS.

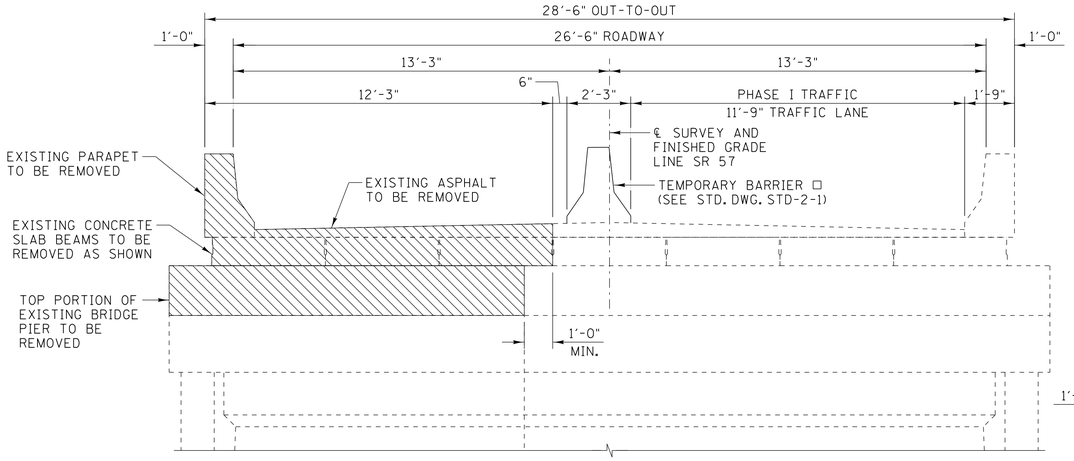

PHASE I DEMOLITION

(LOOKING AHEAD ON SURVEY)
SCALE: 3/8" = 1'-0"

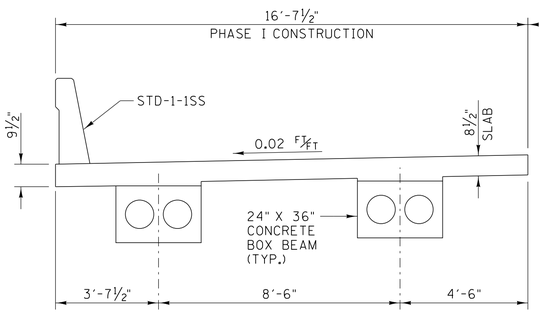

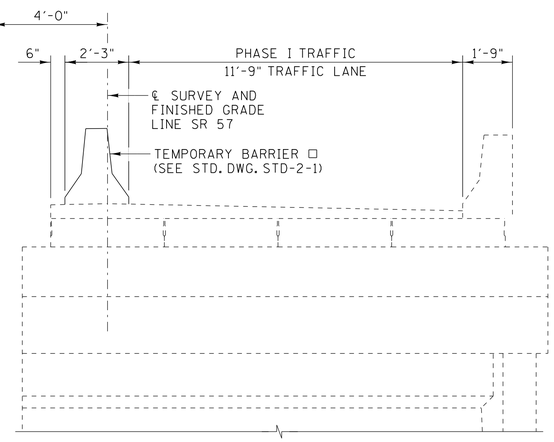

PHASE I CONSTRUCTION

(LOOKING AHEAD ON SURVEY)
SCALE: 3/8" = 1'-0"

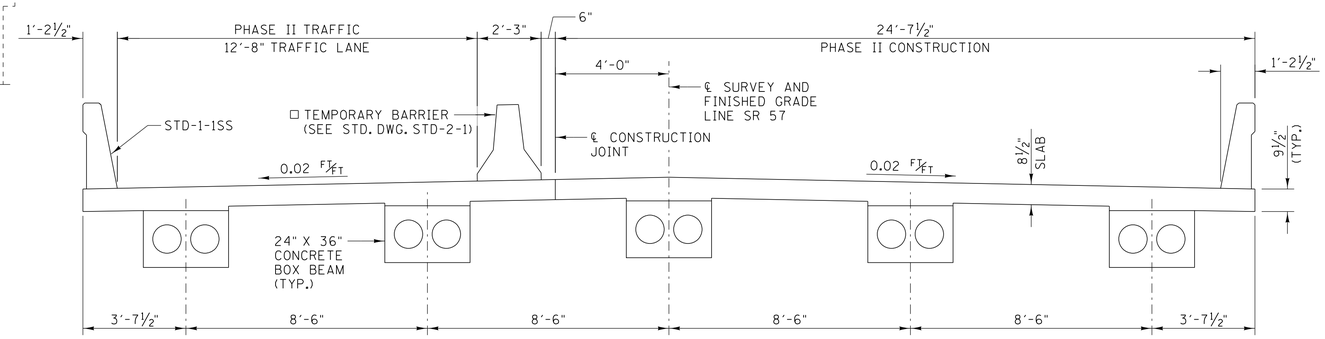

PHASE II CONSTRUCTION

(LOOKING AHEAD ON SURVEY)
SCALE: 3/8" = 1'-0"

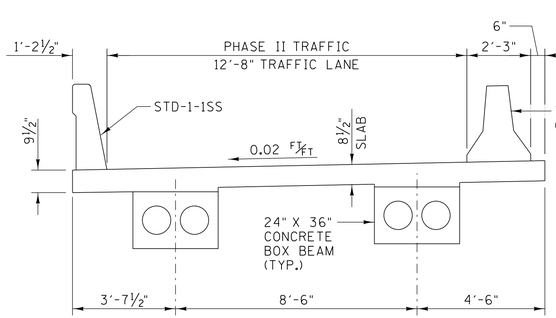

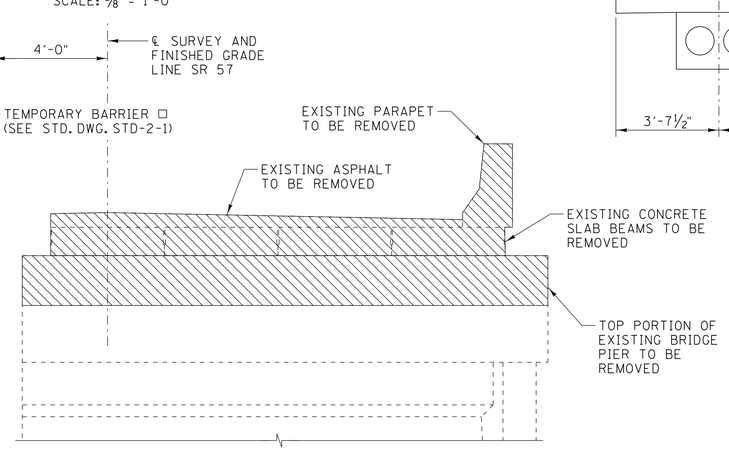

PHASE II DEMOLITION

(LOOKING AHEAD ON SURVEY)
SCALE: 3/8" = 1'-0"

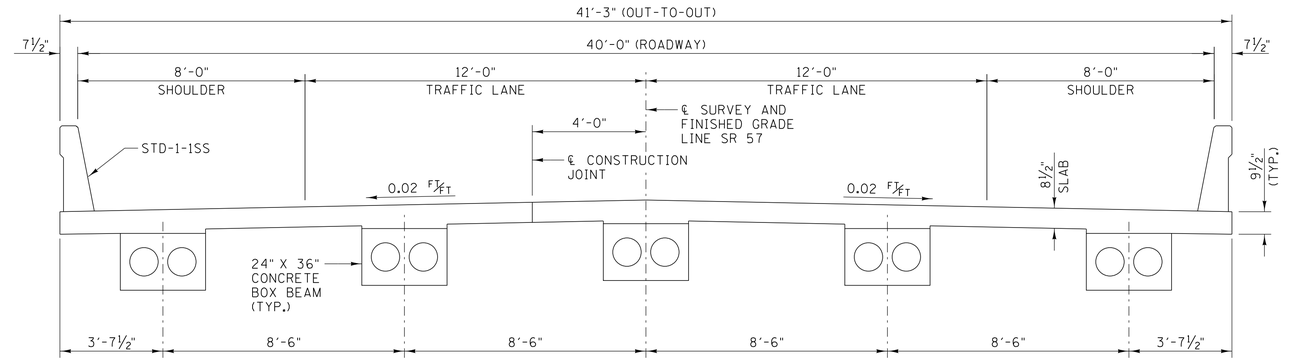

TYPICAL SECTION

(LOOKING AHEAD ON SURVEY)
SCALE: 3/8" = 1'-0"

UNOFFICIAL SET

NOT FOR BIDDING

STATE OF TENNESSEE
DEPARTMENT OF TRANSPORTATION

SEQUENCE OF CONSTRUCTION
(EXISTING SPAN NOS. 6 & 8)

STATE ROUTE 57 OVER
CYPRESS CREEK
BRIDGE I.D. NO. 55SR0570005
LOG MILE 8.25
STATION 24+29.45
MCNAIRY COUNTY
2014

GARVER

DESIGNED BY	B.W. STATON	DATE	OCT. 2013
DRAWN BY	H.E. WILLIAMS	DATE	OCT. 2013
SUPERVISED BY	B.W. STATON	DATE	OCT. 2013
CHECKED BY	A. J. KHAIRI	DATE	OCT. 2013

TN D.O.T. ENGINEERING SUPERVISOR M. LAWSON

JLHolbrook 8/6/2014 5:11:27 PM
WORKSPACE: TDOT Bridge
\\gltdc01\LTProjects\2010\00076\0 - TDOT - Bridge Repair over Cypress Creek\Drawings\BRG\BR-115-77.dgn

PROJECT NO.	YEAR	SHEET NO.
55008-3242-04	2014	

REVISIONS

NO.	DATE	BY	BRIEF DESCRIPTION

□ INTERCONNECTED PORTABLE BARRIER RAIL SHALL BE MOUNTED TO BRIDGE. SEE STD. DWG. STD-2-1 FOR DETAILS.

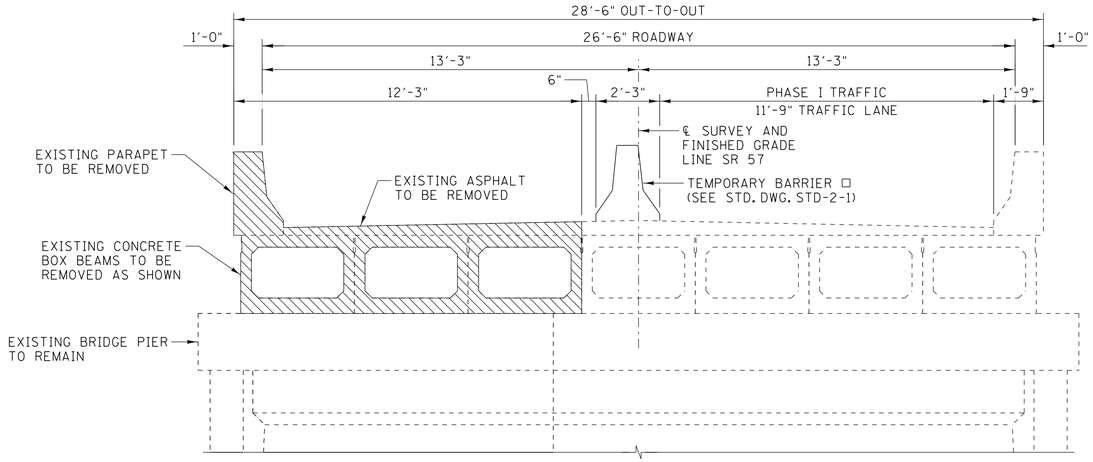

PHASE I DEMOLITION
(LOOKING AHEAD ON SURVEY)
SCALE: 3/8" = 1'-0"

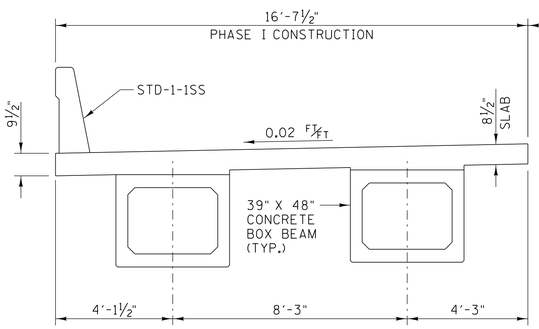

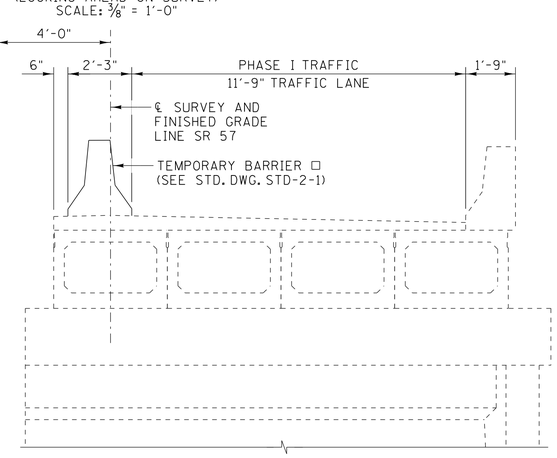

PHASE I CONSTRUCTION
(LOOKING AHEAD ON SURVEY)
SCALE: 3/8" = 1'-0"

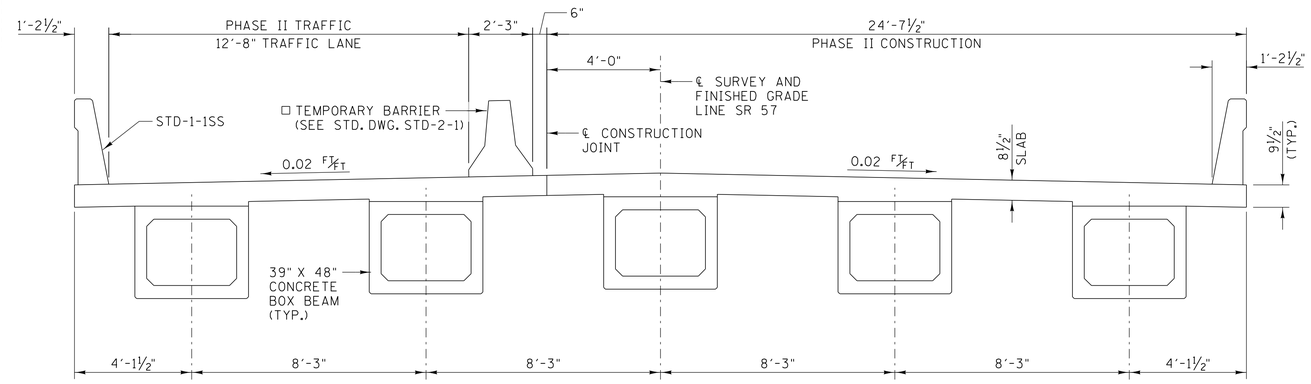

PHASE II CONSTRUCTION
(LOOKING AHEAD ON SURVEY)
SCALE: 3/8" = 1'-0"

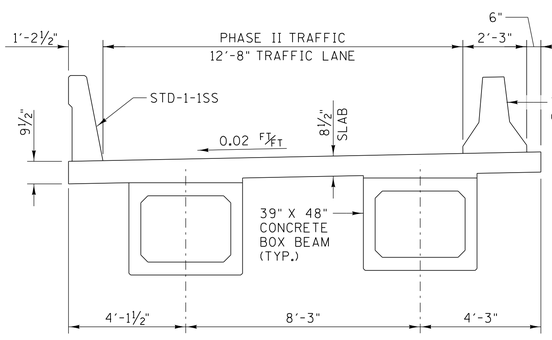

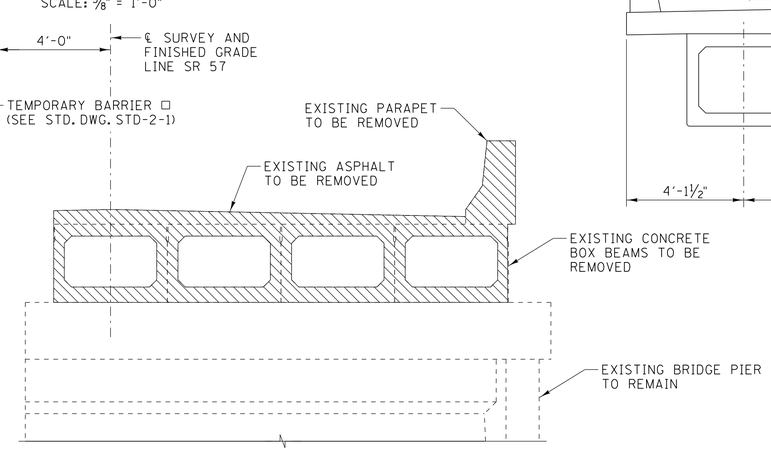

PHASE II DEMOLITION
(LOOKING AHEAD ON SURVEY)
SCALE: 3/8" = 1'-0"

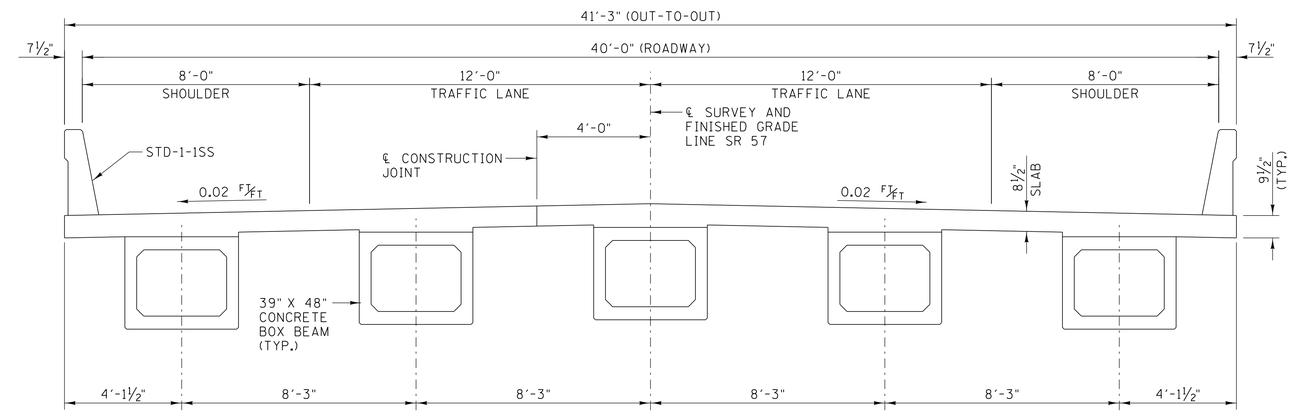

TYPICAL SECTION
(LOOKING AHEAD ON SURVEY)
SCALE: 3/8" = 1'-0"

UNOFFICIAL SET

NOT FOR BIDDING

STATE OF TENNESSEE
DEPARTMENT OF TRANSPORTATION

SEQUENCE OF CONSTRUCTION
(EXISTING SPAN NO. 7)

STATE ROUTE 57 OVER
CYPRESS CREEK
BRIDGE I.D. NO. 55SR0570005
LOG MILE 8.25
STATION 24+29.45
MCNAIRY COUNTY
2014

GARVER

DESIGNED BY	B.W. STATON	DATE	OCT. 2013
DRAWN BY	H.E. WILLIAMS	DATE	OCT. 2013
SUPERVISED BY	B.W. STATON	DATE	OCT. 2013
CHECKED BY	A. J. KHAIRI	DATE	OCT. 2013

TN D.O.T. ENGINEERING SUPERVISOR M. LAWSON

BR-115-78

JLHalbrook 8/6/2014 5:11:27 PM
WORKSPACE: TDOT Bridge
\\gltdc01\LITProjects\2010\00176\0 - TDOT - Bridge Repair over Cypress Creek\Drawings\BRG\BR-115-78.dgn

PROJECT NO.	YEAR	SHEET NO.
55008-3242-04	2014	

REVISIONS

NO.	DATE	BY	BRIEF DESCRIPTION

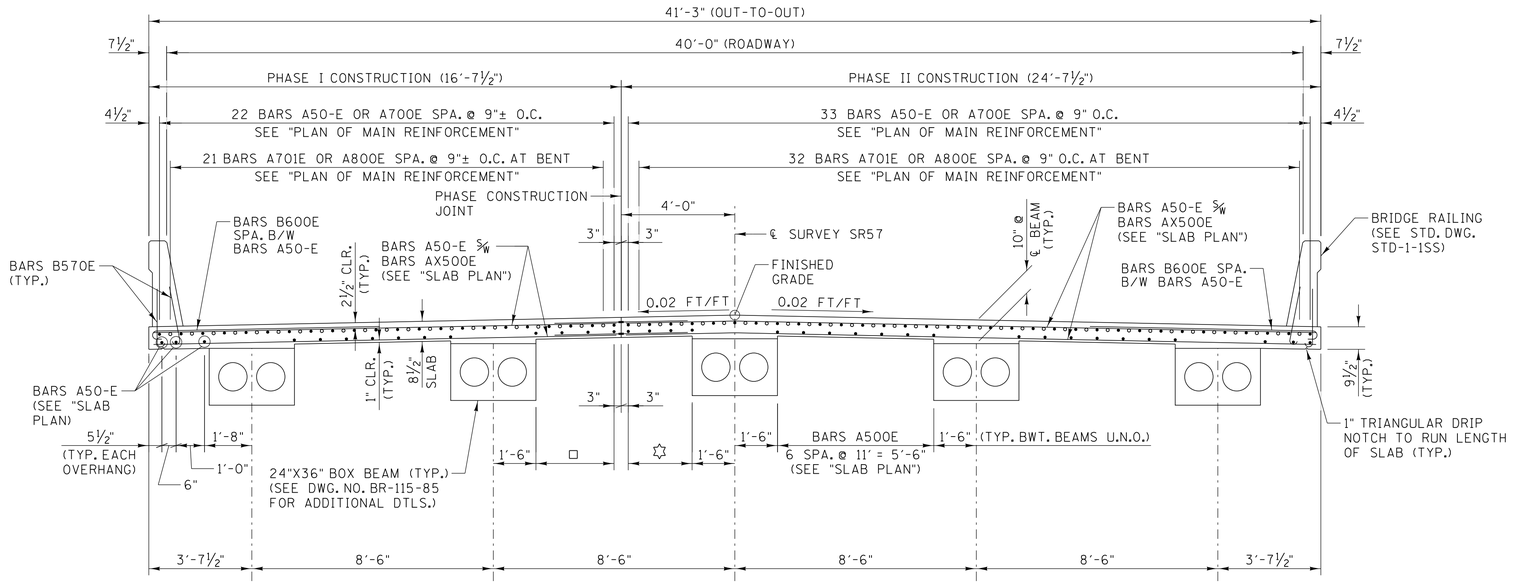

TYPICAL CROSS SECTION - SPAN NOS. 1-3 & 5-7

SCALE: ⅜" = 1'-0"
(LOOKING AHEAD ON SURVEY)

□ DENOTES BARS A500E 3 SPA. @ 11" = 2'-9"

✡ DENOTES BARS A500E 3 SPA. @ 9" = 2'-3"

SUPERSTRUCTURE NOTES:

1. NO PORTION OF THE PARAPET SHALL BE POURED UNTIL THE ENTIRE DECK SLAB IS IN PLACE.
2. WHEN POURING SLAB, PROVISIONS SHALL BE MADE FOR SETTING REINFORCING STEEL FOR PARAPET. THE PARAPET SHALL NOT BE POURED UNTIL THE SLAB IS POURED AND CURED. ALSO SEE DRAWING NO. STD-7-1.
3. THE CONTRACTOR IS SOLELY RESPONSIBLE FOR SUPPORTING THE BEAMS TO PREVENT DAMAGE DUE TO TWISTING OR OVERTURNING DURING ALL PHASES OF CONSTRUCTION. IT IS STRONGLY RECOMMENDED THAT THE TEMPORARY ERECTION DIAPHRAGMS BE INSTALLED PRIOR TO PLACING ANY LOADS ON THE GIRDERS HOWEVER, TEMPORARY ERECTION DIAPHRAGMS MUST BE IN PLACE IN THE SPAN AT THE TIME THE SLAB IS POURED IN SAID SPAN.
4. THE SUPPORT DIAPHRAGMS AT THE PIERS SHALL BE FORMED AND THE BOTTOM FIFTEEN INCHES POURED AS SOON AS POSSIBLE AFTER THE BEAMS HAVE BEEN SET. THE REMAINDER OF THE DIAPHRAGM SHALL BE POURED CONCURRENTLY WITH THE DECK SLAB. THE BEAMS SHALL ATTAIN AN AGE OF AT LEAST 90 DAYS PRIOR TO POURING THE REMAINDER OF THE SUPPORT DIAPHRAGMS AND DECK SLAB. ALL DIAPHRAGM CONCRETE SHALL BE INCLUDED IN THE QUANTITY FOR ITEM NO. 604-03.09.

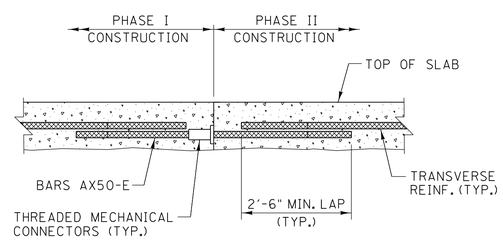

BAR CONNECTOR DETAIL

SCALE: NTS

SHOWING TRANSVERSE REINFORCING STEEL SPLICING WITH THREADED MECHANICAL CONNECTORS.

COST OF THREADED MECHANICAL CONNECTORS TO BE INCLUDED UNDER ITEM NO. 604-02.03, EPOXY COATED REINFORCING STEEL, LB.

BARS AX50-E SHALL BE PLACED WITH SAME EDGE CLEARANCE AS TRANSVERSE BARS.

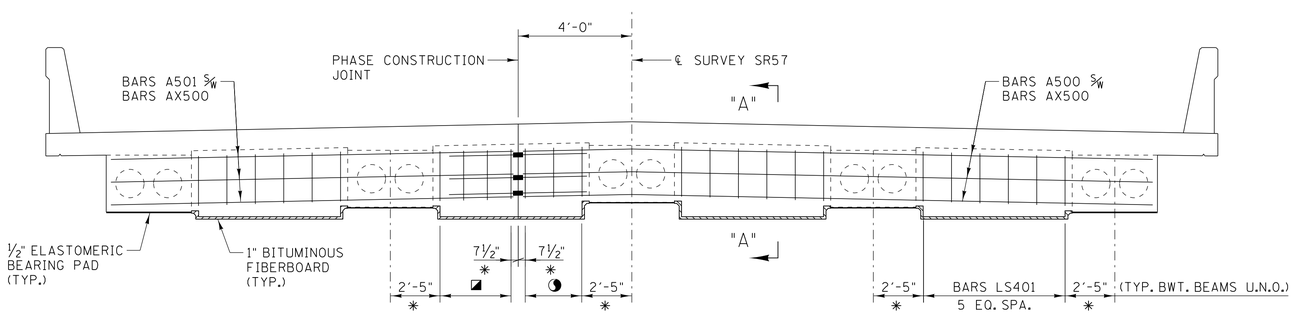

◪ DENOTES BARS LS401 3 EQ. SPA.

◑ DENOTES BARS LS401 2 EQ. SPA.

✳ DIMENSION IS MEASURED ALONG SUPPORT SKEW AT ℄ SUPPORT

TYPICAL SUPPORT VIEW - BENT NOS. 1, 2, 5 & 6

SCALE: ⅜" = 1'-0"
(LOOKING AHEAD ON SURVEY)

NOTE:
SEE DWG. NO. BR-115-84 FOR SECTION "A"-"A"

ESTIMATED QUANTITIES		
CLASS "D" CONCRETE (BRIDGE DECK) C.Y.	EPOXY COATED REINFORCING STEEL LB.	STEEL BAR REINFORCEMENT (BRIDGES) LB.
403	126,338	3,440

UNOFFICIAL SET

NOT FOR BIDDING

STATE OF TENNESSEE
DEPARTMENT OF TRANSPORTATION

SUPERSTRUCTURE

STATE ROUTE 57 OVER
CYPRESS CREEK
BRIDGE I.D. NO. 55SR0570005
LOG MILE 8.25
STATION 24+29.45
MCNAIRY COUNTY
2014

GARVER

DESIGNED BY J.L. HALBROOK DATE OCT. 2013
DRAWN BY H.E. WILLIAMS DATE OCT. 2013
SUPERVISED BY B.W. STATON DATE OCT. 2013
CHECKED BY A.J. KHAIRI DATE OCT. 2013

TN D.O.T. ENGINEERING SUPERVISOR M. LAWSON

JLHalbrook 8/6/2014 5:11:28 PM
WORKSPACE: TDOT Bridge
\\glfdc01\LITProjects\2010\10076\10 - TDOT - Bridge Repair over Cypress Creek\Drawings\BRG\BR-115-79.dgn

PROJECT NO.	YEAR	SHEET NO.
55008-3242-04	2014	

REVISIONS

NO.	DATE	BY	BRIEF DESCRIPTION

DECK CONCRETE POURING SEQUENCE:
SLAB CONSTRUCTION JOINTS MAY BE LOCATED AT THE CONTRACTOR'S OPTION SUBJECT TO THE FOLLOWING:

1. NO CONSTRUCTION JOINT MAY BE LOCATED CLOSER THAN 10 FEET OR FURTHER THAN 15 FEET FROM AN INTERIOR SUPPORT.
2. THE SLAB IN THE MIDDLE SECTION OF BOTH ADJACENT SPANS MUST BE POURED TO WITHIN AT LEAST 15 FEET OF THE SUPPORTS EITHER PRIOR TO OR CONCURRENTLY WITH THE SLAB OVER AN INTERIOR SUPPORT.
3. ALL SLAB CONSTRUCTION JOINTS SHALL BE IN ACCORDANCE WITH THE SLAB CONSTRUCTION JOINT DETAIL SHOWN THIS SHEET.

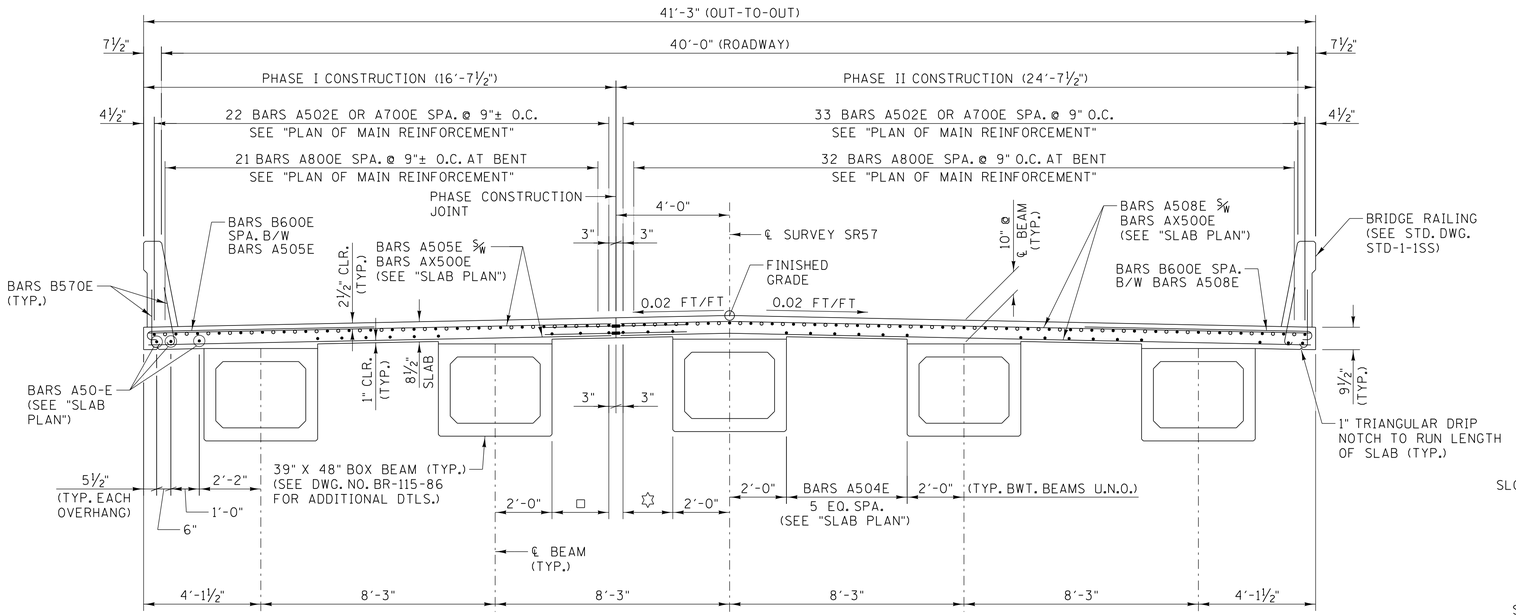

TYPICAL CROSS SECTION - SPAN NO. 4

SCALE: ⅜" = 1'-0"
(LOOKING AHEAD ON SURVEY)

• SEE DETAIL "B" DWG. NO. BRG-XX-XX

□ BARS A504E 2 SPA. @ 1'-0" = 2'-0"

✡ BARS A504E 2 SPA. @ 10½" = 1'-9"

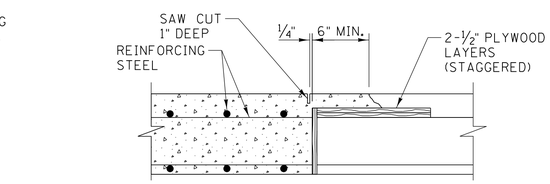

SLAB CONSTRUCTION JOINT DETAIL

SCALE: NTS

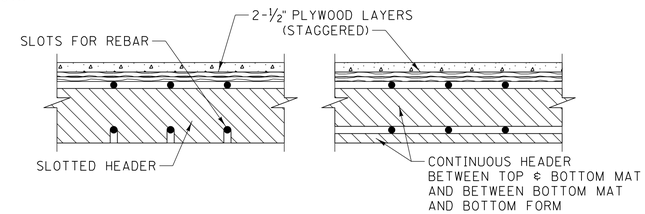

ALTERNATE HEADER DETAILS

SCALE: NTS

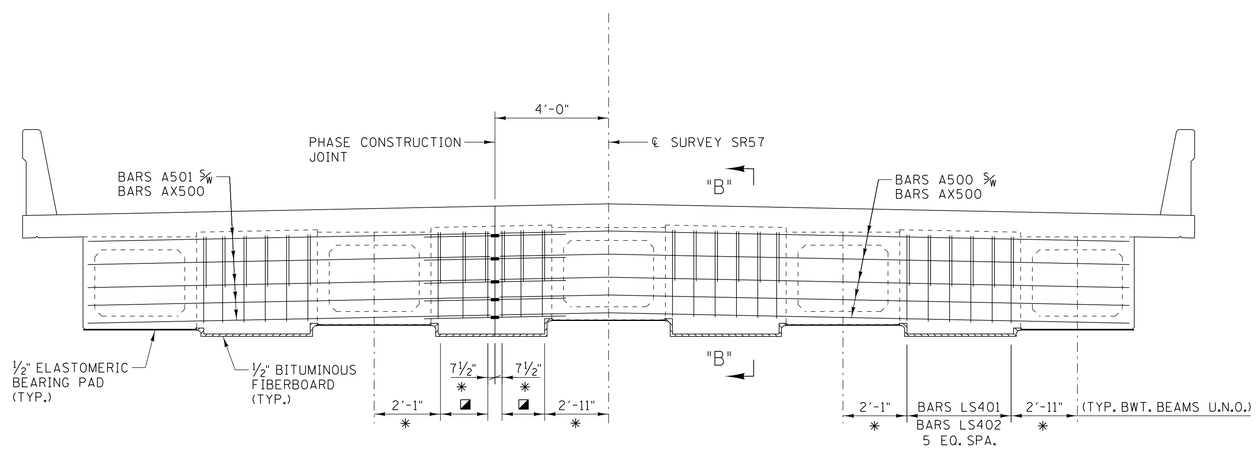

◪ BARS LS401 ℄ BARS LS402 2 EQ. SPA.

✳ DIMENSION IS MEASURED ALONG SUPPORT SKEW AT ℄ SUPPORT

TYPICAL SUPPORT VIEW - BENT NOS. 3 & 4

SCALE: 3"=8" = 1'-0"
(LOOKING AHEAD ON SURVEY)
(SHOWN FOR BENT NO 3, BENT NO. 4 SIMILAR BY SYMMETRY)

NOTE:
SEE DWG. NO. BR-115-84 FOR SECTION "B"-"B"

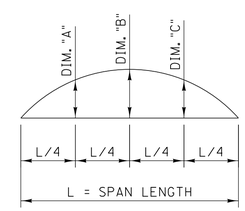

DEAD LOAD CORRECTION CURVE

SCALE: NTS

DEAD LOAD CORRECTION CURVE: THIS CURVE FOR DEAD LOAD SLAB AND ALL DEAD LOADS THAT ARE APPLIED AFTER SLAB IS IN PLACE AND SHOULD BE CORRECTED TO COMPENSATE FOR THE EFFECTS DUE TO VERTICAL CURVE. IF PRESTRESSED DECK PANELS ARE USED AND THE BEAMS ARE PROFILED AFTER PANELS ARE IN PLACE, REDUCE THE DEAD LOAD CORRECTION VALUES SHOWN BY 25%.

TABLE OF VARIABLES

LOCATION	DIM. "A"	DIM. "B"	DIM. "C"
SPAN NOS. 1 - 3	5/16"	3/8"	5/16"
SPAN NO. 4	1 11/16"	2 1/16"	1 11/16"
SPAN NOS. 3 -7	5/16"	3/8"	5/16"

GARVER

DESIGNED BY J.L. HALBROOK DATE OCT. 2013
DRAWN BY H.E. WILLIAMS DATE OCT. 2013
SUPERVISED BY B.W. STATON DATE OCT. 2013
CHECKED BY A.J. KHAIRI DATE OCT. 2013

TN D.O.T. ENGINEERING SUPERVISOR M. LAWSON

UNOFFICIAL SET

NOT FOR BIDDING

STATE OF TENNESSEE
DEPARTMENT OF TRANSPORTATION

SUPERSTRUCTURE

STATE ROUTE 57 OVER
CYPRESS CREEK
BRIDGE I.D. NO. 55SR0570005
LOG MILE 8.25
STATION 24+29.45
MCNAIRY COUNTY
2014

BR-115-80

JLHalbrook 8/6/2014 5:41:28 PM
WORKSPACE: TDOT Bridge
\\gltdc01\LITProjects\2010\00170 - TDOT - Bridge Repair over Cypress Creek\Drawings\BRG\BR-115-80.dgn

PROJECT NO.	YEAR	SHEET NO.
55008-3242-04	2014	

REVISIONS

NO.	DATE	BY	BRIEF DESCRIPTION

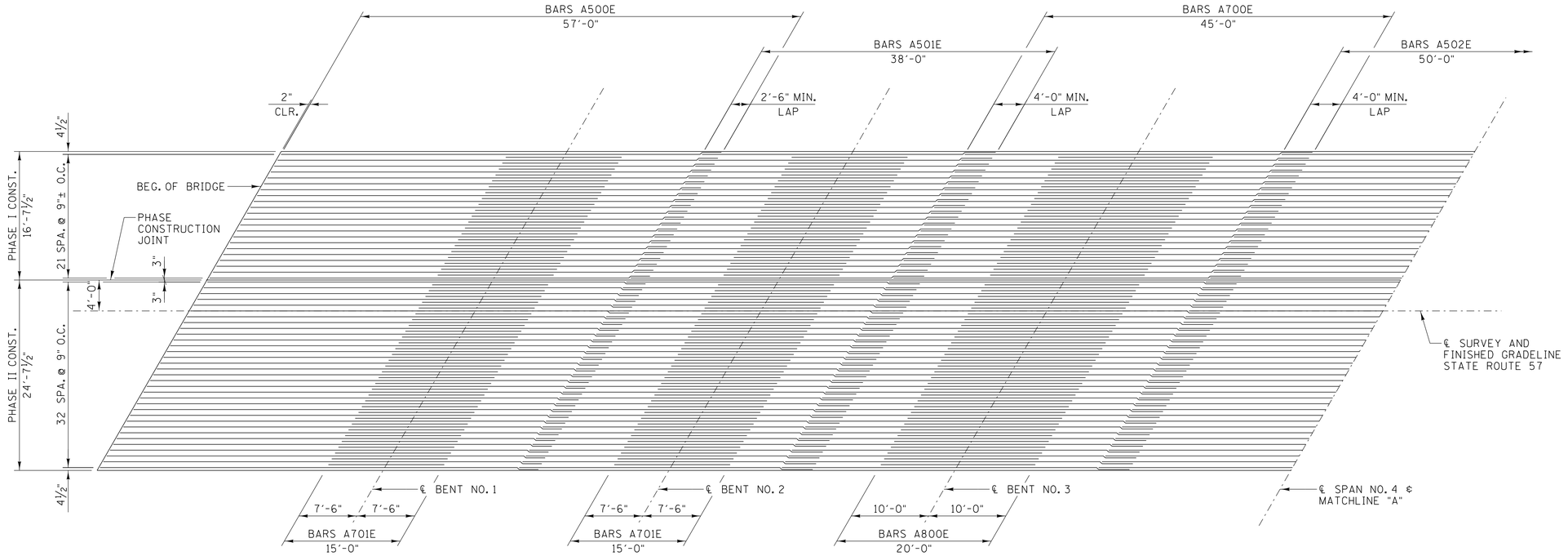

PLAN OF MAIN REINFORCEMENT

SCALE: ⅛" = 1'-0"

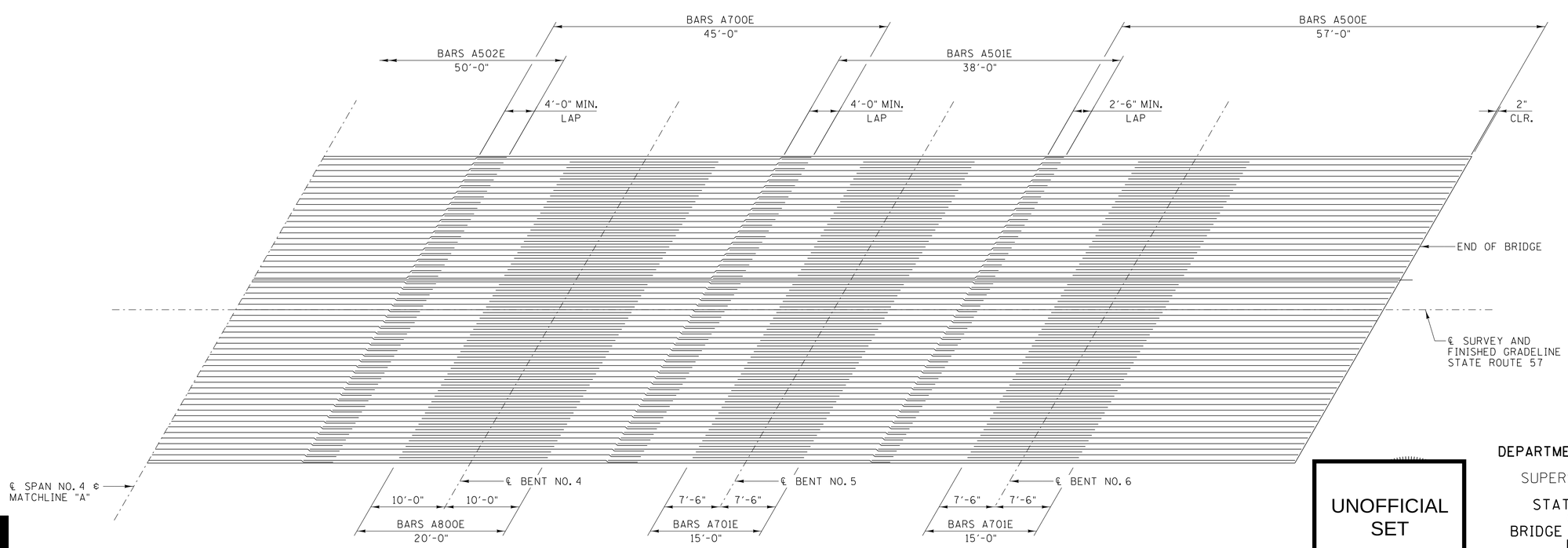

PLAN OF MAIN REINFORCEMENT (CONT'D)

SCALE: ⅛" = 1'-0"

GARVER

DESIGNED BY J.L. HALBROOK DATE OCT. 2013
DRAWN BY C.W. THOMAS DATE OCT. 2013
SUPERVISED BY B.W. STATON DATE OCT. 2013
CHECKED BY A.J. KHAIRI DATE OCT. 2013

TN D.O.T. ENGINEERING SUPERVISOR M. LAWSON

UNOFFICIAL SET

NOT FOR BIDDING

STATE OF TENNESSEE
DEPARTMENT OF TRANSPORTATION

SUPERSTRUCTURE DETAILS

STATE ROUTE 57 OVER
CYPRESS CREEK
BRIDGE I.D. NO. 55SR0570005
LOG MILE 8.25
STATION 24+29.45
MCNAIRY COUNTY
2014

BR-115-81

JLHalbrook 8/6/2014 5:11:29 PM
WORKSPACE: TDOT Bridge
\\glfdc01\LITProjects\2010\00176\0 - TDOT - Bridge Repair over Cypress Creek\Drawings\BRG\BR-115-81.dgn

PROJECT NO.	YEAR	SHEET NO.
55008-3242-04	2014	

REVISIONS

NO.	DATE	BY	BRIEF DESCRIPTION

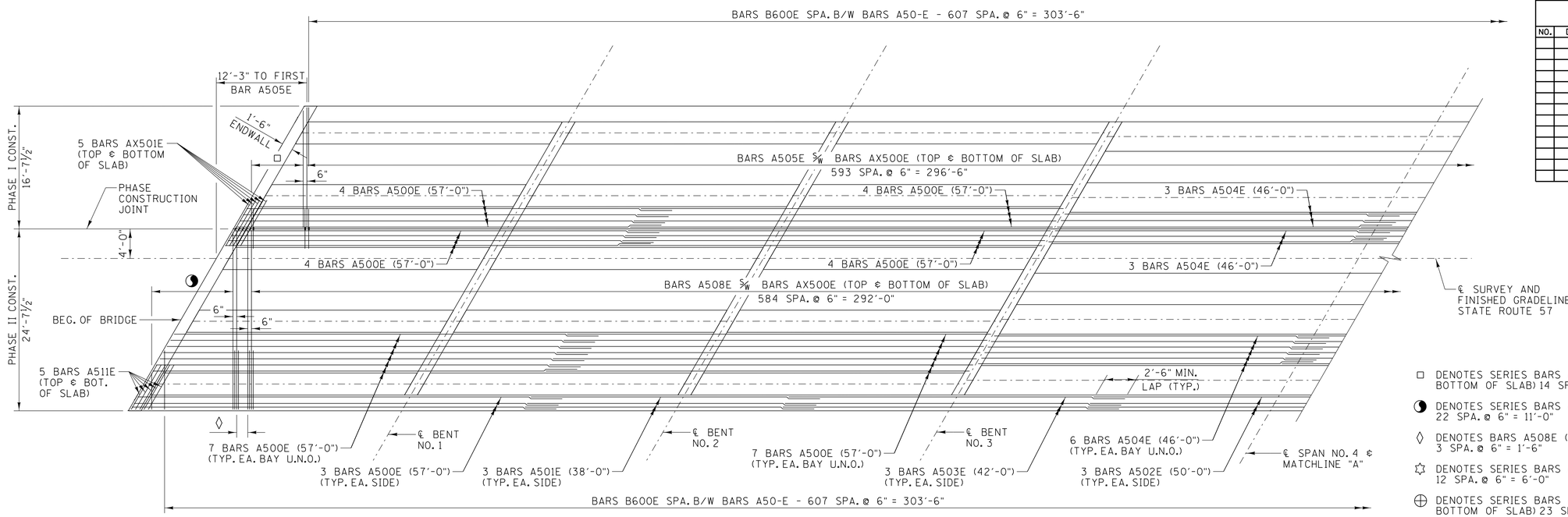

SLAB PLAN

SCALE: 1/8" = 1'-0"

- □ DENOTES SERIES BARS A506E S/W BARS AX500E (TOP & BOTTOM OF SLAB) 14 SPA. @ 6" = 7'-0"
- ◑ DENOTES SERIES BARS A509E (TOP & BOTTOM OF SLAB) 22 SPA. @ 6" = 11'-0"
- ◊ DENOTES BARS A508E (TOP & BOTTOM OF SLAB) 3 SPA. @ 6" = 1'-6"
- ✡ DENOTES SERIES BARS A507E (TOP & BOTTOM OF SLAB) 12 SPA. @ 6" = 6'-0"
- ⊕ DENOTES SERIES BARS A510E S/W BARS AX500E (TOP & BOTTOM OF SLAB) 23 SPA. @ 6" = 11'-6"
- ◪ DENOTES BARS A505E (TOP & BOTTOM OF SLAB) 4 SPA. @ 6" = 2'-0"

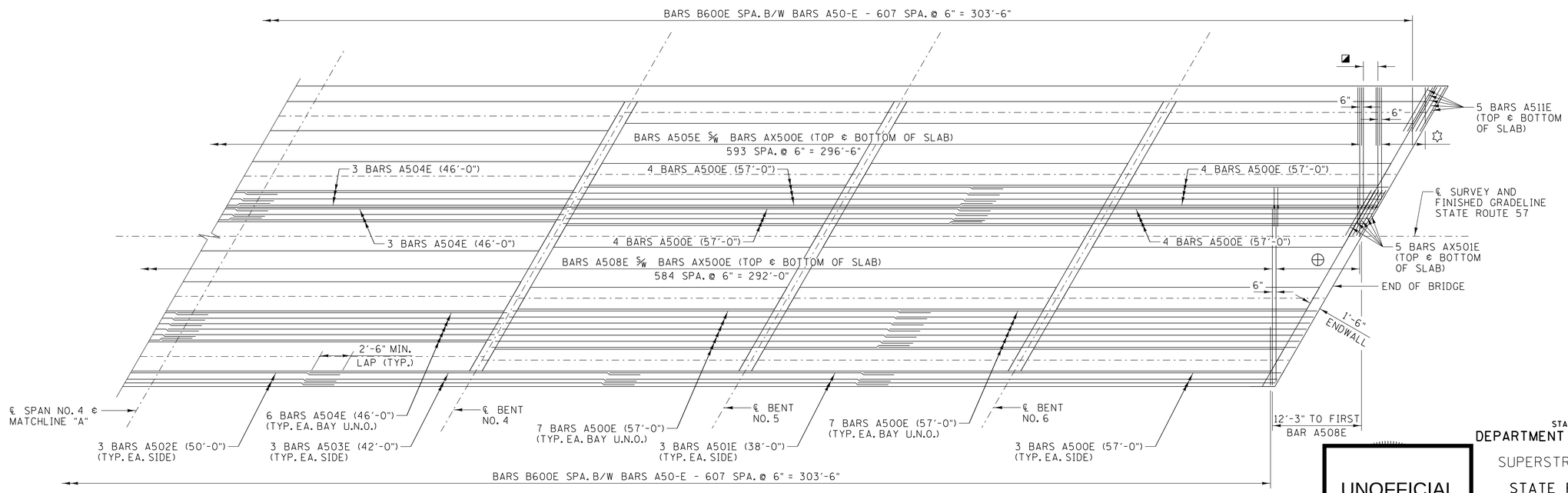

SLAB PLAN (CONT'D)

SCALE: 1/8" = 1'-0"

GARVER

DESIGNED BY J.L. HALBROOK DATE OCT. 2013
DRAWN BY C.W. THOMAS DATE OCT. 2013
SUPERVISED BY B.W. STATON DATE OCT. 2013
CHECKED BY A.J. KHAIRI DATE OCT. 2013

TN D.O.T. ENGINEERING SUPERVISOR M. LAWSON

UNOFFICIAL SET

NOT FOR BIDDING

STATE OF TENNESSEE
DEPARTMENT OF TRANSPORTATION

SUPERSTRUCTURE DETAILS

STATE ROUTE 57 OVER
CYPRESS CREEK
BRIDGE I.D. NO. 55SR0570005
LOG MILE 8.25
STATION 24+29.45
MCNAIRY COUNTY
2014

BR-115-82

JLHalbrook 8/6/2014 5:11:29 PM
WORKSPACE: TDOT Bridge
\\glfdc01\LITProjects\2010\00176\0 - TDOT - Bridge Repair over Cypress Creek\Drawings\BRG\BR-115-82.dgn

PROJECT NO.	YEAR	SHEET NO.
55008-3242-04	2014	

REVISIONS

NO.	DATE	BY	BRIEF DESCRIPTION

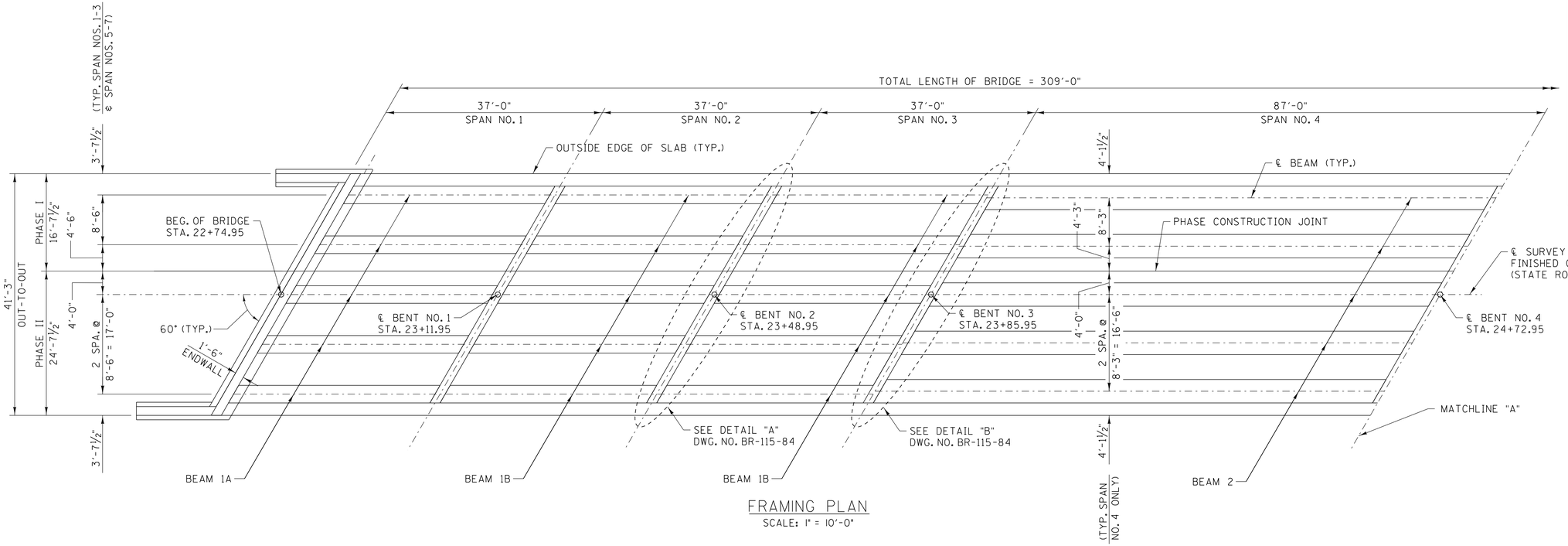

FRAMING PLAN

SCALE: 1" = 10'-0"

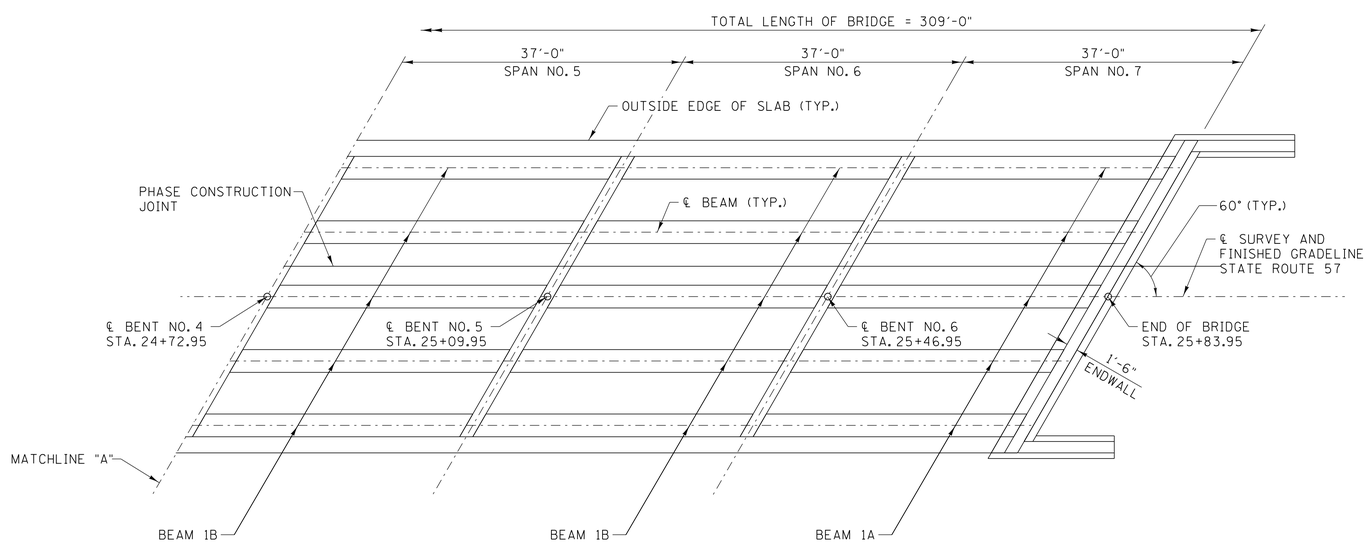

FRAMING PLAN (CONT'D)

SCALE: 1" = 10'-0"

GARVER

DESIGNED BY J.L. HALBROOK DATE OCT. 2013
DRAWN BY C.W. THOMAS DATE OCT. 2013
SUPERVISED BY B.W. STATON DATE OCT. 2013
CHECKED BY A.J. KHAIRI DATE OCT. 2013

TN D.O.T. ENGINEERING SUPERVISOR M. LAWSON

UNOFFICIAL SET

NOT FOR BIDDING

STATE OF TENNESSEE
DEPARTMENT OF TRANSPORTATION

SUPERSTRUCTURE DETAILS

STATE ROUTE 57 OVER
CYPRESS CREEK
BRIDGE I.D. NO. 55SR0570005
LOG MILE 8.25
STATION 24+29.45
MCNAIRY COUNTY
2014

BR-115-83

JLHalbrook 8/6/2014 5:11:30 PM
WORKSPACE: TDOT Bridge
\\glfdc01\LITProjects\2010\00076\0 - TDOT - Bridge Repair over Cypress Creek\Drawings\BRG\BR-115-83.dgn

PROJECT NO.	YEAR	SHEET NO.
55008-3242-04	2014	

REVISIONS

NO.	DATE	BY	BRIEF DESCRIPTION

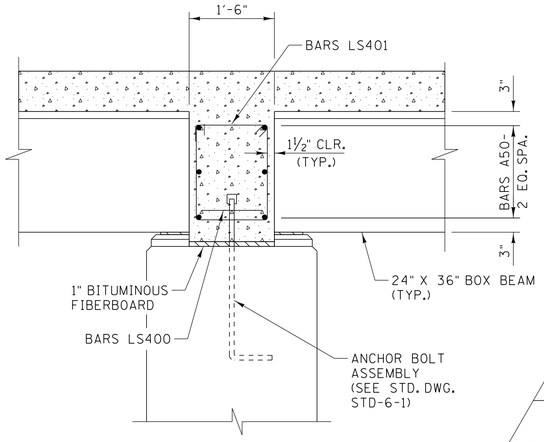

SECTION "A"-"A"

SCALE: ¾" = 1'-0"

(SHOWN FOR BENT NO. 2, BENT NOS. 1, 5, & 6 ARE SIMILAR)

□ DENOTES BARS LS401 2 EQ. SPA.

☆ DENOTES BARS LS401 3 EQ. SPA.

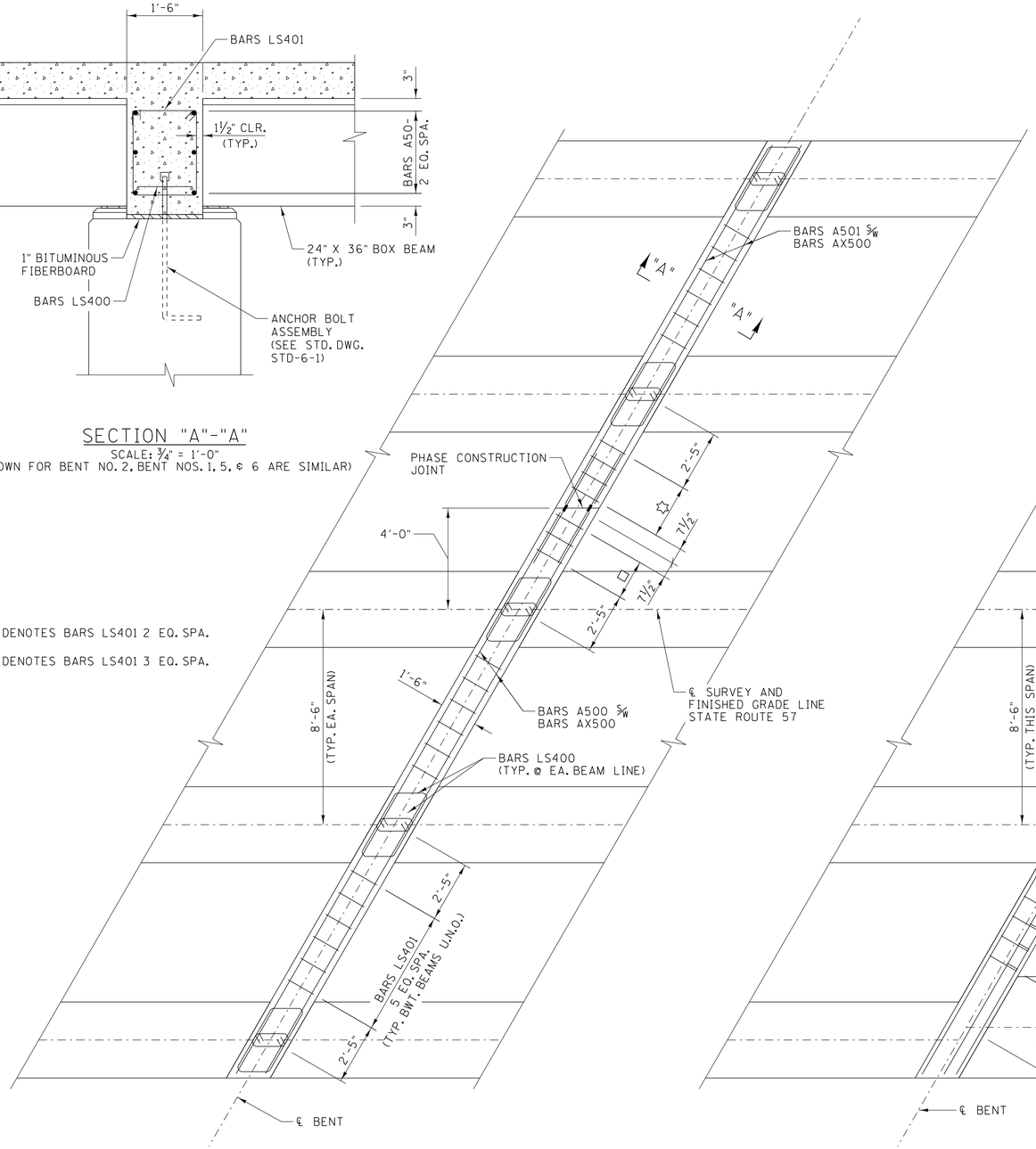

DETAIL "A"

SCALE: ⅜" = 1'-0"

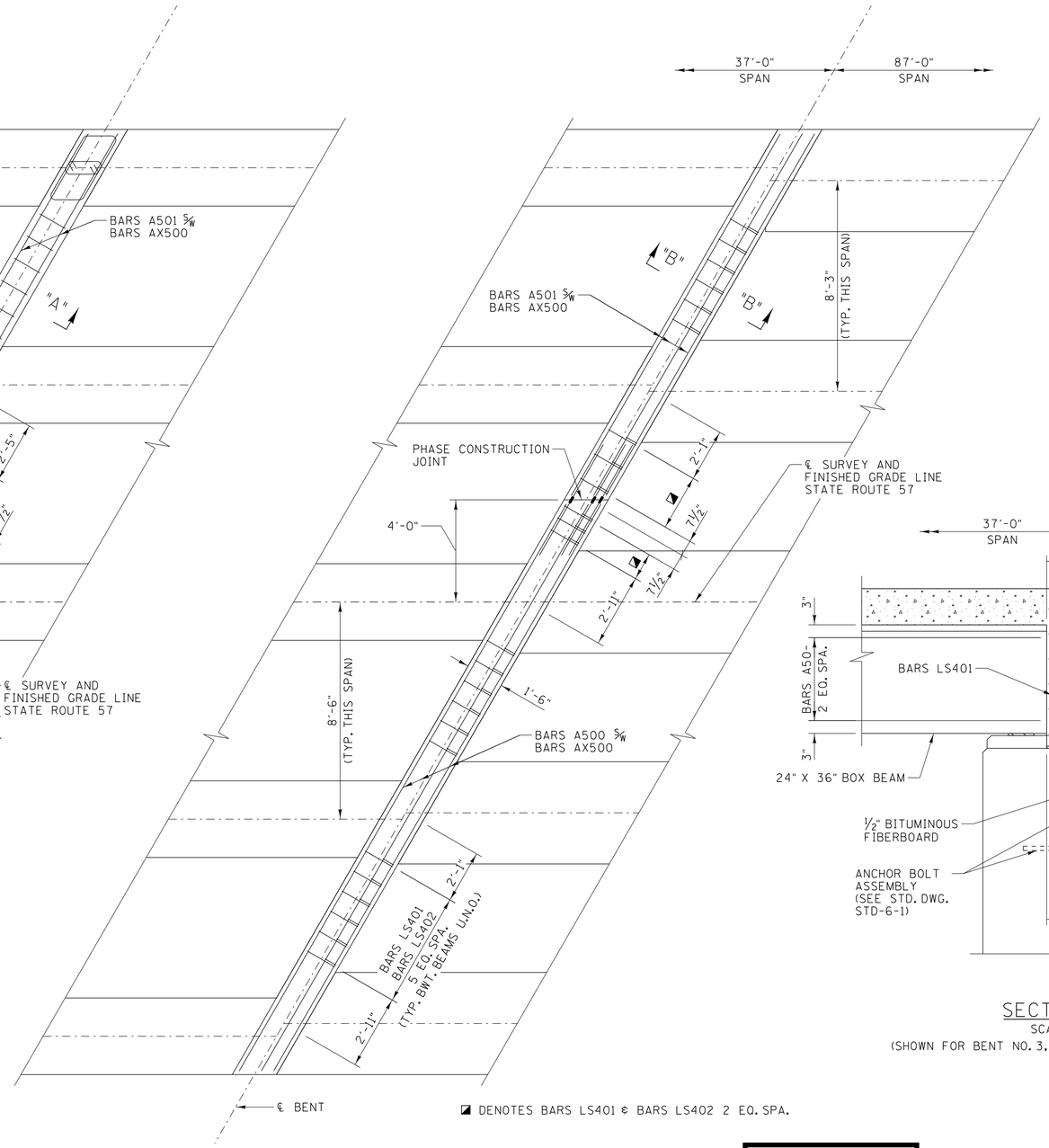

◪ DENOTES BARS LS401 & BARS LS402 2 EQ. SPA.

DETAIL "B"

SCALE: ⅜" = 1'-0"

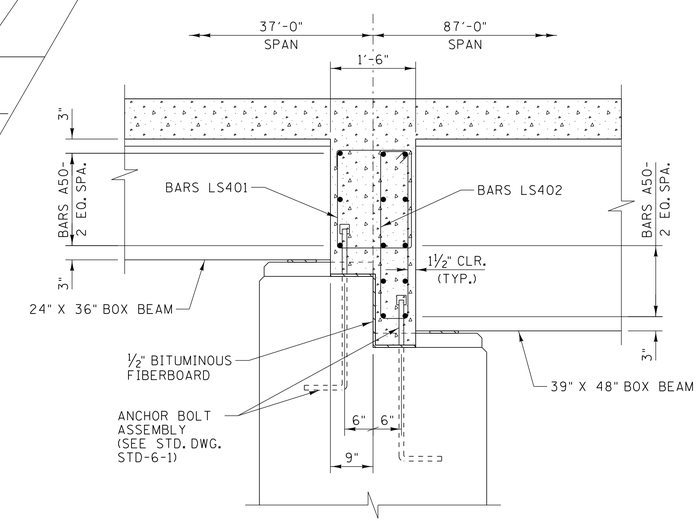

SECTION "B"-"B"

SCALE: ¾" = 1'-0"

(SHOWN FOR BENT NO. 3, BENT NO. 4 SIMILAR BY SYMMETRY)

UNOFFICIAL SET

NOT FOR BIDDING

STATE OF TENNESSEE
DEPARTMENT OF TRANSPORTATION

SUPERSTRUCTURE DETAILS

STATE ROUTE 57 OVER
CYPRESS CREEK
BRIDGE I.D. NO. 55SR0570005
LOG MILE 8.25
STATION 24+29.45
MCNAIRY COUNTY
2014

GARVER

DESIGNED BY	J.L. HALBROOK	DATE	OCT. 2013
DRAWN BY	H.E. WILLIAMS	DATE	OCT. 2013
SUPERVISED BY	B.W. STATON	DATE	OCT. 2013
CHECKED BY	A.J. KHAIRI	DATE	OCT. 2013

TN D.O.T. ENGINEERING SUPERVISOR M. LAWSON

BR-115-84

JLHalbrook 8/6/2014 5:41:30 PM
WORKSPACE: TDOT Bridge
\\gltdc01\LTProjects\2010\10017610 - TDOT - Bridge Repair over Cypress Creek\Drawings\BRG\BR-115-84.dgn

PROJECT NO.	YEAR	SHEET NO.
55008-3242-04	2014	

REVISIONS

NO.	DATE	BY	BRIEF DESCRIPTION

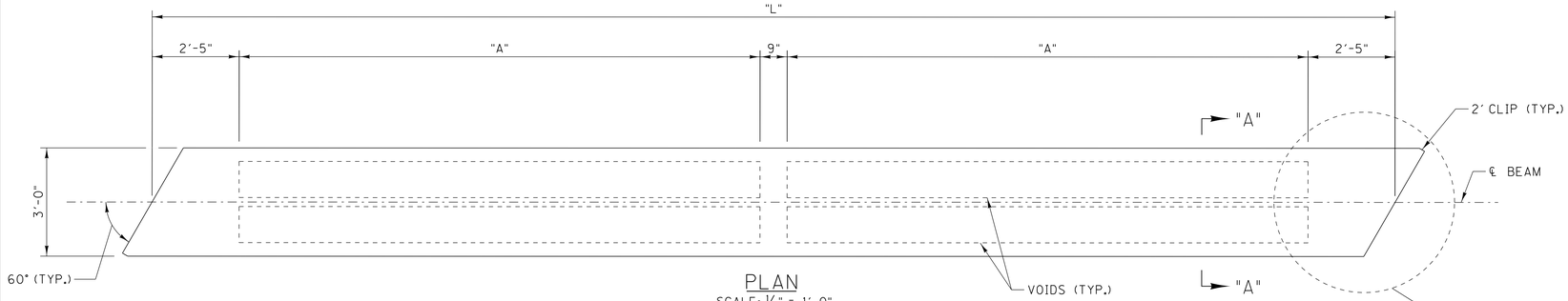

PLAN
SCALE: ½" = 1'-0"
(SHOWING PROPERTIES)

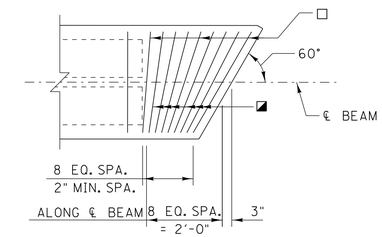

DETAIL "X"
SCALE: ½" = 1'-0"
(SHOWING FLARED STIRRUPS)

□ DENOTES DOUBLE PROJECTING BARS, CONSISTS OF 2 BARS ZA500 5/8" 1 BARS H500 (TYP.)

◪ DENOTES NON-PROJECTING BARS, CONSISTS OF 2 BARS H500 (TYP.)

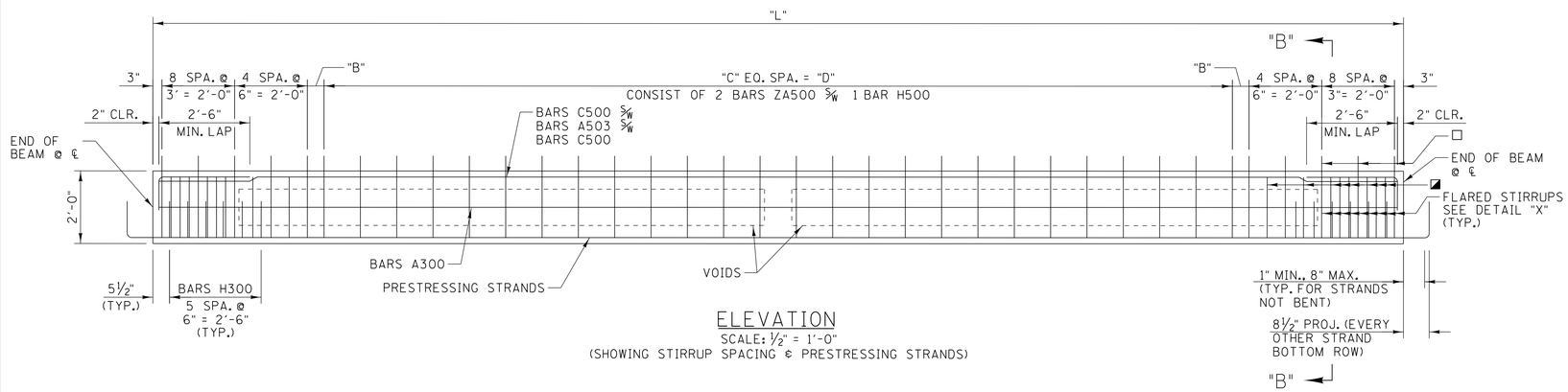

ELEVATION
SCALE: ½" = 1'-0"
(SHOWING STIRRUP SPACING & PRESTRESSING STRANDS)

BEAM DIMENSIONS					
LOCATION	"A"	"B"	"C"	"D"	"L"
BEAM 1A	14'-5"	5½"	25	25'-0"	34'-5"
BEAM 1B	14'-10½"	5"	26	26'-0"	35'-4"

BILL OF STEEL PER BEAM					
BARS	SIZE	BEAM 1A		BEAM 1B	
		NO. REQ'D	LENGTH	NO. REQ'D	LENGTH
A300	3	2	34'-0"	2	34'-11"
A500	5	8	5'-6"	8	5'-6"
A501	5	6	2'-8"	6	2'-8"
A502	5	8	1'-8"	8	1'-8"
A503	5	6	34'-0"	6	34'-11"
C500	5	12	3'-4"	12	3'-4"
H300	3	10	4'-10"	10	4'-10"
H500	5	68	6'-0"	69	6'-0"
ZA500	5	72	3'-10"	74	3'-10"

NOTES:

1. THE CONCRETE FOR THIS CONSTRUCTION SHALL BE OF SUCH PROPERTIES AS TO ATTAIN A COMPRESSIVE STRENGTH OF NOT LESS THAN 7,000 PSI AT THE AGE OF 28 DAYS AND STRESS TRANSFER SHALL NOT BE MADE TO THE BRIDGE MEMBER UNTIL THE TEST SPECIMENS INDICATE THAT THE CONCRETE HAS REACHED A COMPESSIVE STRENGTH OF AT LEAST 5,500 PSI. SEE GENERAL NOTES FOR CONCRETE FINISHING NOTE.
2. SEE STD-14-3 FOR BOX BEAM STANDARD DETAILS, NOTES AND REINFORCING.
3. ALL PRESTRESSING STRANDS SHOWN ARE 270 KSI LO-LAX. HAVING A ½" DIA., AN AREA OF 0.153 IN² AND A JACKING LOAD OF 31,000 LB.
4. THE PRESTRESSED BEAMS SHALL ATTAIN AN AGE OF AT LEAST 90 DAYS PRIOR TO POURING THE SUPPORT DIAPHRAGMS (EXCLUDING BOTTOM 15 INCHES) AND DECK SLAB.

PRESTRESSED BEAM DESIGN - PER BEAM

LIVE LOAD DISTRIBUTION FACTOR FOR MOMENT = 0.756 LANES

LIVE LOAD DISTRIBUTION FACTOR FOR SHEAR = 0.954 LANES

COMPOSITE DEAD LOAD: DC = 150 LB/FT/BEAM
DW = 272 LB/FT/BEAM

COMPOSITE SLAB DESIGN STRENGTH: F'C = 3 KSI

NOTE:
DOWNWARD DEFLECTION UNDER TOTAL DL IS NOT ALLOWED.

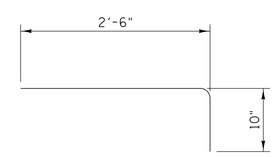

BARS C500

ESTIMATED QUANTITIES PER BEAM				
LOCATION	NO. BEAMS REQ'D	PRESTRESSING STRANDS (LOW RELAXATION) LB.	CLASS "A" CONCRETE C.Y.	REINFORCING STEEL LB.
BEAM 1A	10	315	6	1088
BEAM 1B	20	323	6	1109

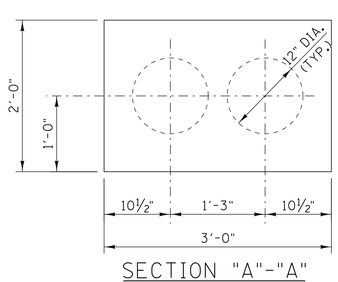

SECTION "A"-"A"
SCALE: 1" = 1'-0"
(SHOWING PROPERTIES)

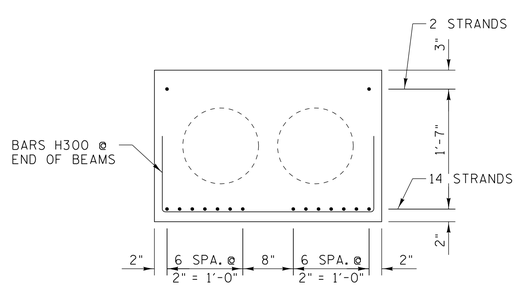

SECTION "B"-"B"
SCALE: 1" = 1'-0"
(SHOWING PRESTRESSING STRANDS)

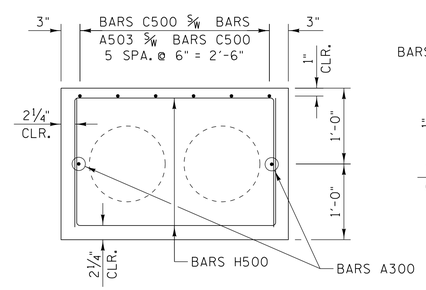

SECTION "B"-"B"
SCALE: 1" = 1'-0"
(SHOWING NON-PROJECTING STIRRUPS)

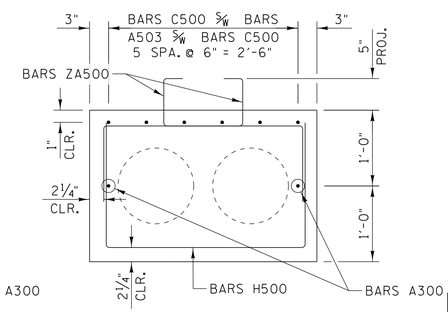

SECTION "B"-"B"
SCALE: 1" = 1'-0"
(SHOWING PROJECTION STIRRUPS)

UNOFFICIAL SET

NOT FOR BIDDING

STATE OF TENNESSEE
DEPARTMENT OF TRANSPORTATION
PRESTRESSED BOX BEAM DETAILS
BEAMS 1A & 1B
STATE ROUTE 57 OVER
CYPRESS CREEK
BRIDGE I.D. NO. 55SR0570005
LOG MILE 8.25
STATION 24+29.45
MCNAIRY COUNTY
2014

GARVER

DESIGNED BY S.L. HALBROOK DATE OCT. 2013
DRAWN BY H.E. WILLIAMS DATE OCT. 2013
SUPERVISED BY B.W. STATON DATE OCT. 2013
CHECKED BY A. J. KHAIRI DATE OCT. 2013

TN D.O.T. ENGINEERING SUPERVISOR M. LAWSON

BR-115-85

JLHolbrook 8/6/2014 5:41:30 PM
WORKSPACE: TDOT Bridge
\\qlitdc01\LITProjects\2010\00T610 - TDOT - Bridge Repair over Cypress Creek\Drawings\BR0\BR-115-85.dgn

PROJECT NO.	YEAR	SHEET NO.
55008-3242-04	2014	

REVISIONS

NO.	DATE	BY	BRIEF DESCRIPTION

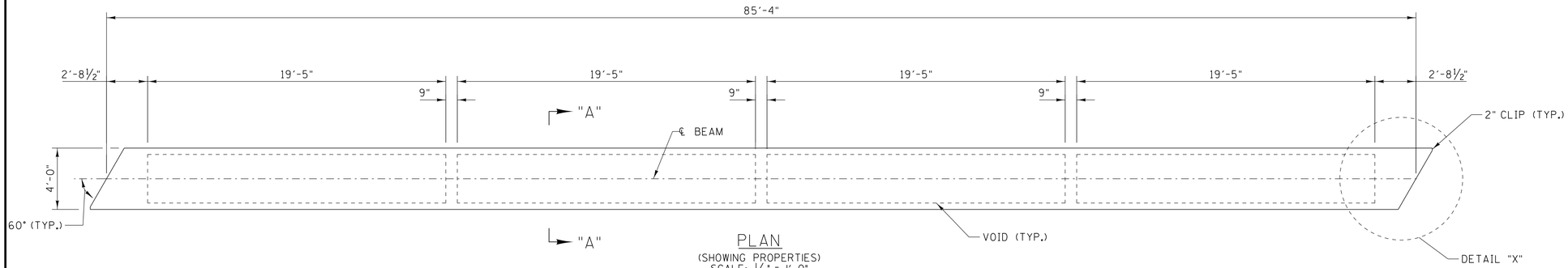

PLAN
(SHOWING PROPERTIES)
SCALE: ¼" = 1'-0"

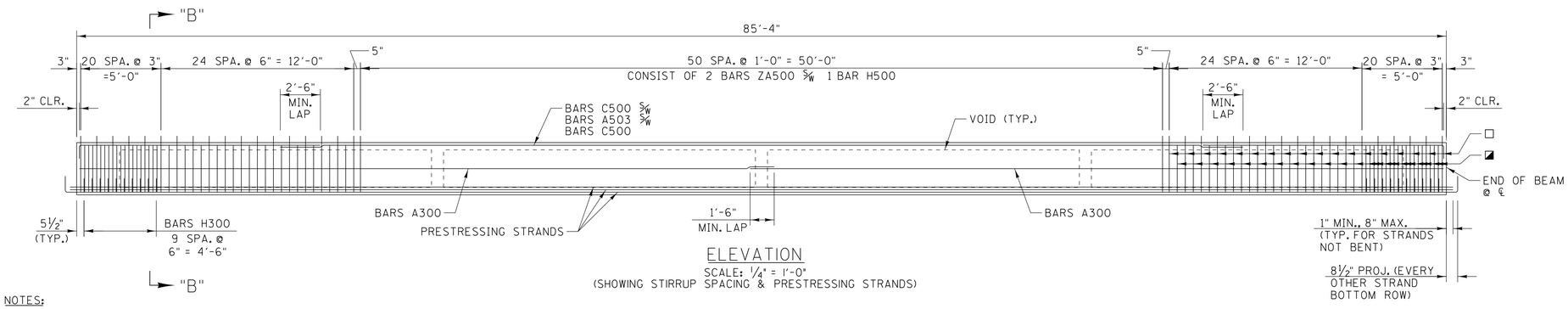

ELEVATION
SCALE: ¼" = 1'-0"
(SHOWING STIRRUP SPACING & PRESTRESSING STRANDS)

NOTES:

1. THE CONCRETE FOR THIS CONSTRUCTION SHALL BE OF SUCH PROPERTIES AS TO ATTAIN A COMPRESSIVE STRENGTH OF NOT LESS THAN 7,000 PSI AT THE AGE OF 28 DAYS AND STRESS TRANSFER SHALL NOT BE MADE TO THE BRIDGE MEMBER UNTIL THE TEST SPECIMENS INDICATE THAT THE CONCRETE HAS REACHED A COMPESSIVE STRENGTH OF AT LEAST 6,000 PSI. SEE GENERAL NOTES FOR CONCRETE FINISHING NOTE.
2. SEE STD-14-3 FOR BOX BEAM STANDARD DETAILS, NOTES AND REINFORCING.
3. ALL PRESTRESSING STRANDS SHOWN ARE 270 KSI LO-LAX. HAVING A ½" DIA., AN AREA OF 0.153 IN² AND A JACKING LOAD OF 31,000 LB.
4. THE PRESTRESSED BEAMS SHALL ATTAIN AN AGE OF AT LEAST 90 DAYS PRIOR TO POURING THE SUPPORT DIAPHRAGMS (EXCLUDING BOTTOM 15 INCHES) AND DECK SLAB.

◇ DENOTES STRAND TO BE DEBONDED 6'-0" FROM EACH END OF BEAM

△ DENOTES STRAND TO BE DEBONDED 8'-0" FROM EACH END OF BEAM

○ DENOTES STRAND TO BE DEBONDED 10'-0" FROM EACH END OF BEAM

□ DENOTES STRAND TO BE DEBONDED 12'-0" FROM EACH END OF BEAM

PRESTRESSED BEAM DESIGN - PER BEAM

LIVE LOAD DISTRIBUTION FACTOR FOR MOMENT = 0.812 LANES

LIVE LOAD DISTRIBUTION FACTOR FOR SHEAR = 1.070 LANES

COMPOSITE DEAD LOAD: DC = 150 LB/FT/BEAM
DW = 272 LB/FT/BEAM

COMPOSITE SLAB DESIGN STRENGTH: F'C = 3 KSI

NOTE:
DOWNWARD DEFLECTION UNDER TOTAL DL IS NOT ALLOWED.

□ DENOTES DOUBLE PROJECTING BARS, CONSISTS OF 2 BARS ZA500 5/16" 1 BARS H500 (TYP.)

◪ DENOTES NON-PROJECTING BARS, CONSISTS OF 2 BARS H500 (TYP.)

BILL OF STEEL PER BEAM

BARS	SIZE	NO. REQ'D	LENGTH
A300	3	2	43'-3"
A500	5	12	5'-6"
A501	5	8	3'-8"
A502	5	10	2'-11"
A503	5	6	60'-0"
C500	5	12	15'-10"
H300	3	20	5'-10"
H500	5	195	9'-6"
ZA500	5	174	4'-10"

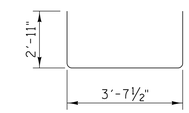

BARS C500

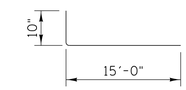

BARS C500

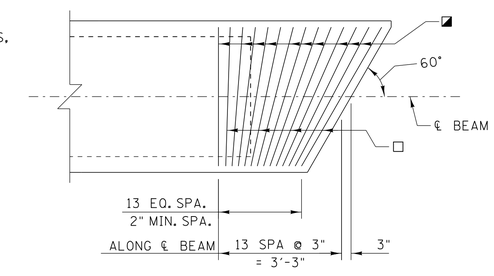

DETAIL "X"
SCALE: ½" = 1'-0"
(SHOWING FLARED STIRRUPS)

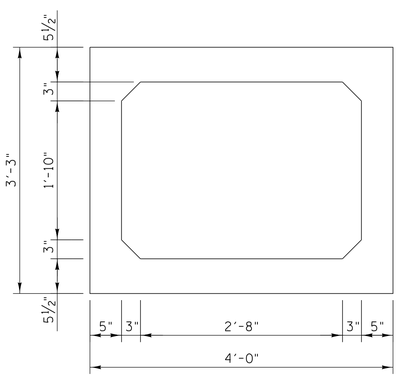

SECTION "A"-"A"
SCALE: 1" = 1'-0"
(SHOWING PROPERTIES)

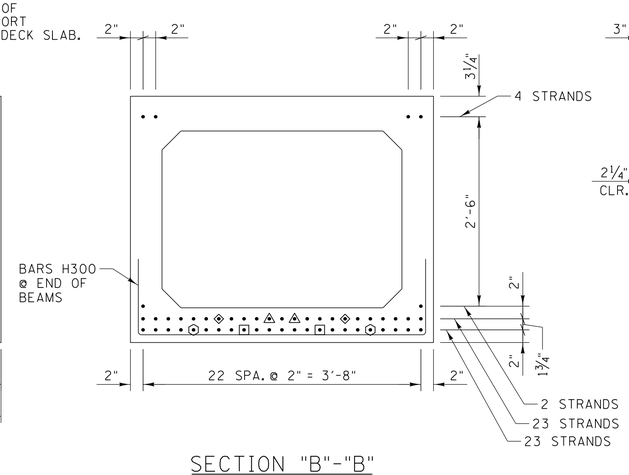

SECTION "B"-"B"
SCALE: 1" = 1'-0"
(SHOWING PRESTRESSING STRANDS)

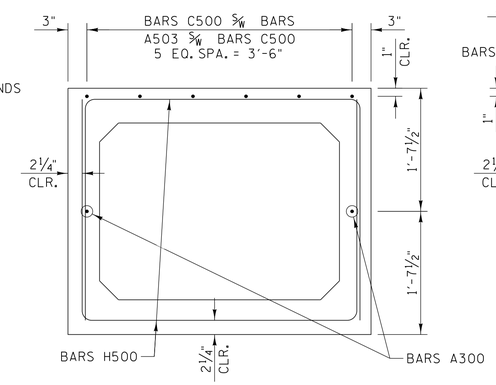

SECTION "B"-"B"
SCALE: 1" = 1'-0"
(SHOWING NON-PROJECTING STIRRUPS)

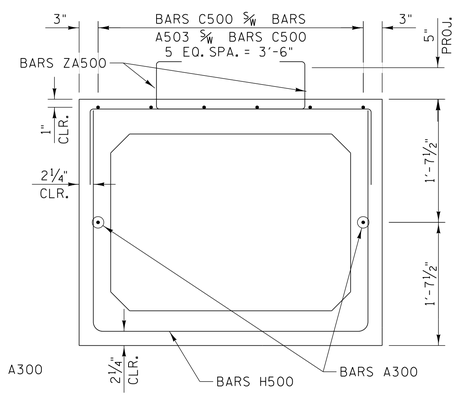

SECTION "B"-"B"
SCALE: 1" = 1'-0"
(SHOWING PROJECTION STIRRUPS)

ESTIMATED QUANTITIES PER BEAM

NO. BEAMS REQ'D	PRESTRESSING STRANDS (LOW RELAXATION) LB.	CLASS "A" CONCRETE C.Y.	REINFORCING STEEL LB.
5	2,396	20	3,589

UNOFFICIAL SET

NOT FOR BIDDING

STATE OF TENNESSEE
DEPARTMENT OF TRANSPORTATION
PRESTRESSED BOX BEAM DETAILS
BEAM 2
STATE ROUTE 57 OVER
CYPRESS CREEK
BRIDGE I.D. NO. 55SR0570005
LOG MILE 8.25
STATION 24+29.45
MCNAIRY COUNTY
2014

GARVER

DESIGNED BY J.L. HALBROOK DATE OCT. 2013
DRAWN BY H.E. WILLIAMS DATE OCT. 2013
SUPERVISED BY B.W. STATON DATE OCT. 2013
CHECKED BY A. J. KHAIRI DATE OCT. 2013

TN D.O.T. ENGINEERING SUPERVISOR M. LAWSON

BR-115-86

JLHalbrook 8/6/2014 5:41:31 PM
WORKSPACE: TDOT Bridge
\\gltdc01\LITProjects\2010\00171610 - TDOT - Bridge Repair over Cypress Creek\Drawings\BR01\BR-115-86.dgn

PROJECT NO.	YEAR	SHEET NO.
55008-3242-04	2014	

REVISIONS

NO.	DATE	BY	BRIEF DESCRIPTION

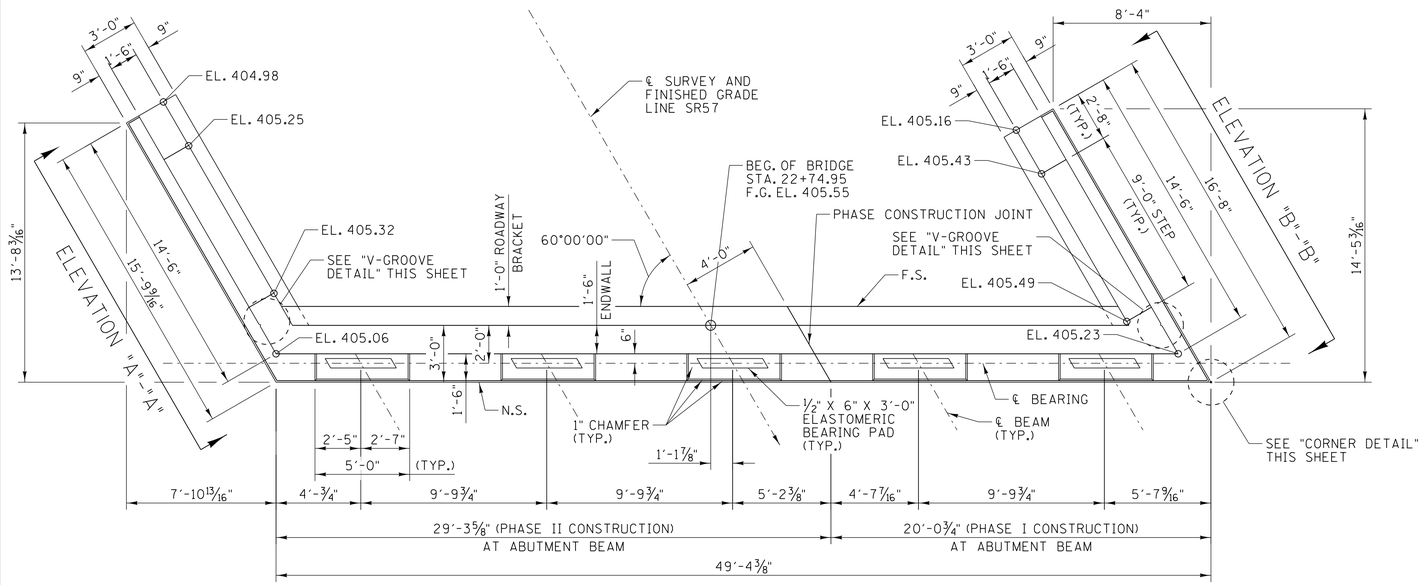

PLAN

SCALE: 1/4" = 1'-0"

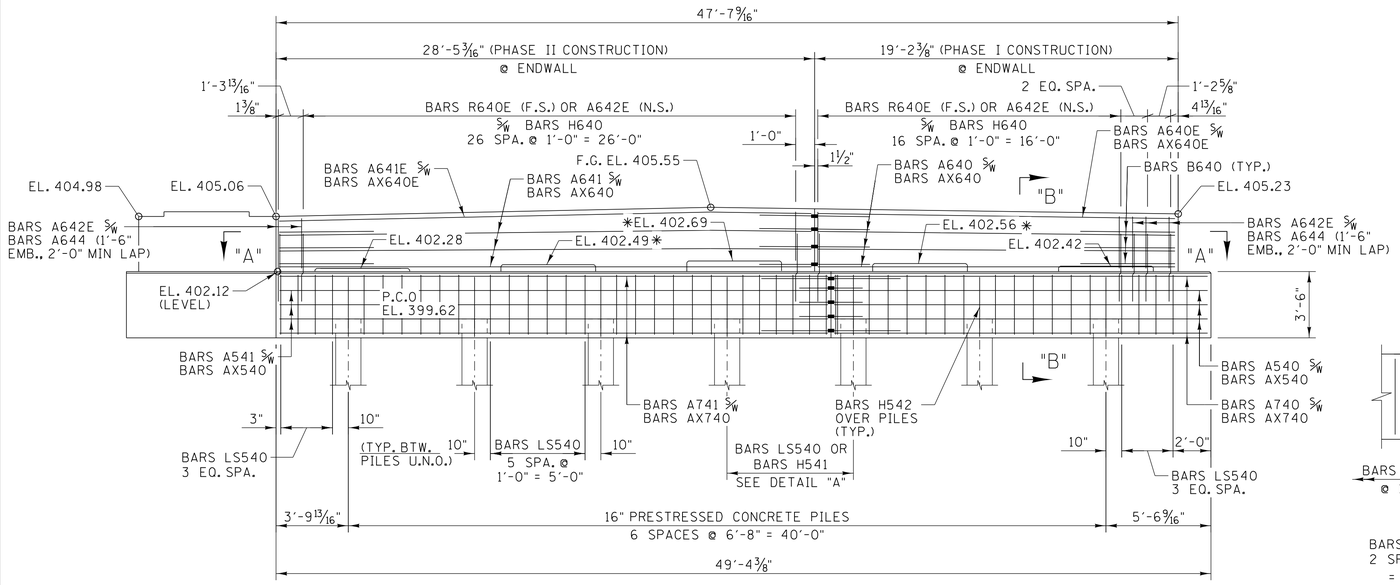

ELEVATION

SCALE: 1/4" = 1'-0"
(LOOKING BACK ON SURVEY)

* DENOTES RISER BLOCKS TO BE REINFORCED. SEE "RISER BLOCK REINFORCING DETAILS" ON DWG. NO. BR-115-88.

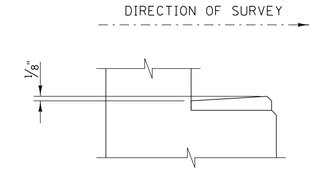

RISER BLOCK SLOPE DETAIL

SCALE: NTS
(TYP. @ EACH RISER BLOCK)

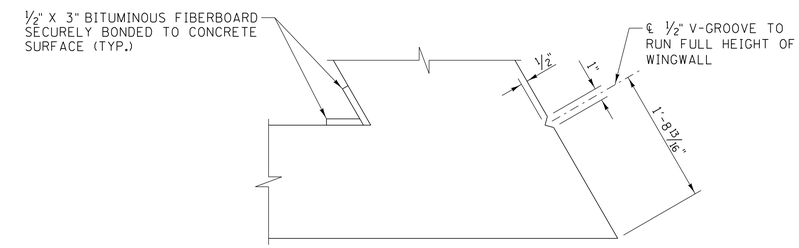

V-GROOVE DETAIL

SCALE: NTS
(TYP. @ EACH WING)

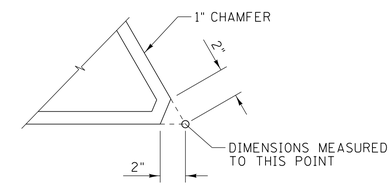

CORNER DETAIL

SCALE: NTS

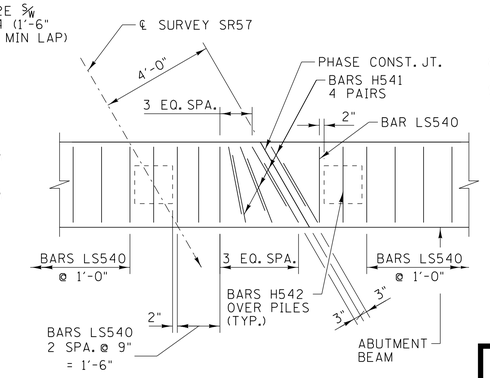

DETAIL "A"

SCALE: 1/2" = 1'-0"
(PLAN VIEW)

NOTES:

1. RISER BLOCKS TO BE POURED MONOLITHICALLY WITH THE ABUTMENT BEAM.
2. NOT LESS THAN HALF OF THE SLAB IN THE END SPAN SHALL BE POURED PRIOR TO, OR CONCURRENTLY WITH, PLACEMENT OF ANY PART OF THE ABUTMENT BACKWALL. AT LEAST THE TOP 12 INCHES OF THE BACKWALL SHALL BE POURED CONCRRENTLY WITH THE END OF SLAB.
3. COST OF BRIDGE RAIL AND POST IS TO BE INCLUDED IN THE UNIT PRICE BID FOR THE BRIDGE RAIL SYSTEM.
4. ELASTOMERIC PADS SHALL BE IN PLACE A MINIMUM OF ONE DAY BEFORE BEING DISTURBED BY SETTING BEAMS. PLACE RUBBER BONDING CEMENT IN SUCH A WAY THAT VISIBLE CONCRETE SURFACES WILL NOT BE STAINED.
5. WHEN POURING WINGWALLS, PROVISIONS SHALL BE MADE FOR SETTING REINFORCING STEEL FOR WINGPOSTS AND PARAPETS. FOR DETAILS OF WINGPOSTS AND PARAPET, SEE STD. DWG. NO. STD-1-1SS.
6. WINGBEAM PILES SHALL BE DRIVEN TO THE PLAN'S TIP ELEVATION OR REFUSAL, SEISMIC ATTACHMENT IS NOT REQUIRED FOR WINGBEAM PILES.
7. SEE STANDARD DRAWING STD-6-1 FOR PILE DETAILS AND NOTES.
8. SEE STANDARD DRAWING STD-6-1 FOR PILE ANCHORAGE DETAILS.
9. SEE DWG. NO. BR-115-88 FOR SECTION "A"-"A", SECTION "B"-"B", ELEVATION "A"-"A", AND ELEVATION "B"-"B".

ESTIMATED QUANTITIES

CLASS "A" CONCRETE (BRIDGES) C.Y.	STEEL BAR REINFORCEMENT (BRDIGES) LB.	EPOXY COATED REINFORCING STEEL LB.
43	5,495	1,215

STATE OF TENNESSEE
DEPARTMENT OF TRANSPORTATION

ABUTMENT NO. 1

STATE ROUTE 57 OVER
CYPRESS CREEK
BRIDGE I.D. NO. 55SR0570005
LOG MILE 8.25
STATION 24+29.45
MCNAIRY COUNTY
2014

UNOFFICIAL SET

NOT FOR BIDDING

GARVER

DESIGNED BY J. L. HALBROOK DATE OCT. 2013
DRAWN BY H.E.WILLIAMS DATE OCT. 2013
SUPERVISED BY B.W. STATON DATE OCT. 2013
CHECKED BY A.J. KHAIRI DATE OCT. 2013

TN D.O.T. ENGINEERING SUPERVISOR M. LAWSON

JLHalbrook 8/6/2014 5:41:31 PM
WORKSPACE: TDOT Bridge
\\gltdc01\LTProjects\2010\00176\10 - TDOT - Bridge Repair over Cypress Creek\Drawings\BRG\BR-115-87.dgn

BR-115-87

PROJECT NO.	YEAR	SHEET NO.
55008-3242-04	2014	

REVISIONS

NO.	DATE	BY	BRIEF DESCRIPTION

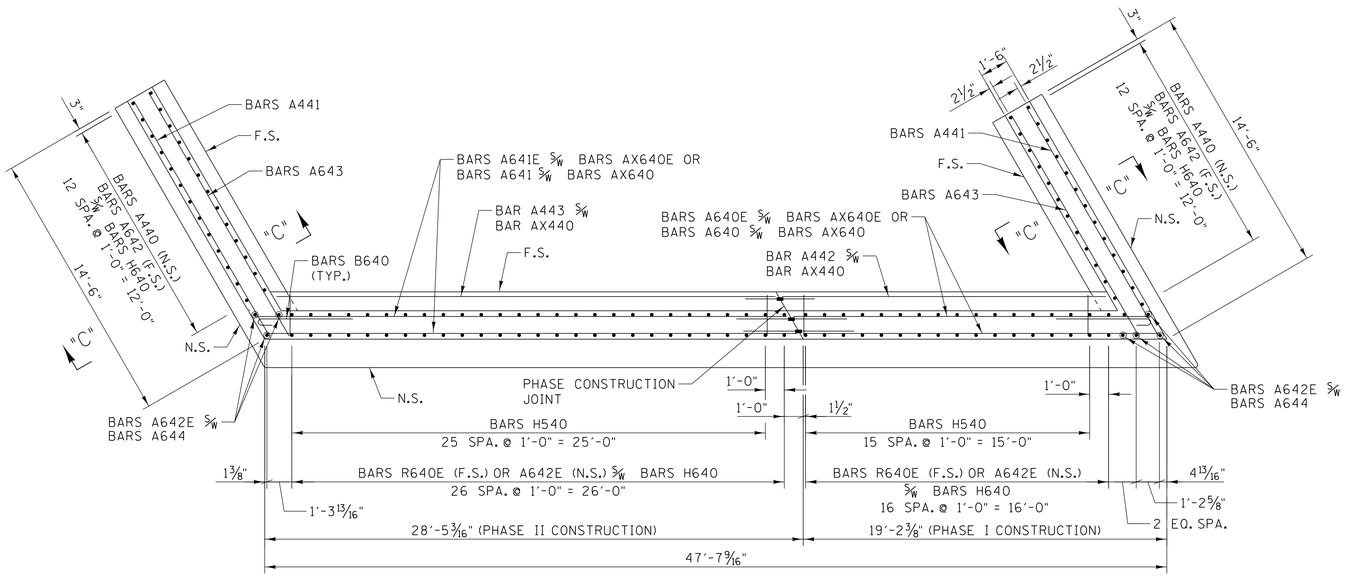

SECTION A-A
SCALE: ¼" = 1'-0"

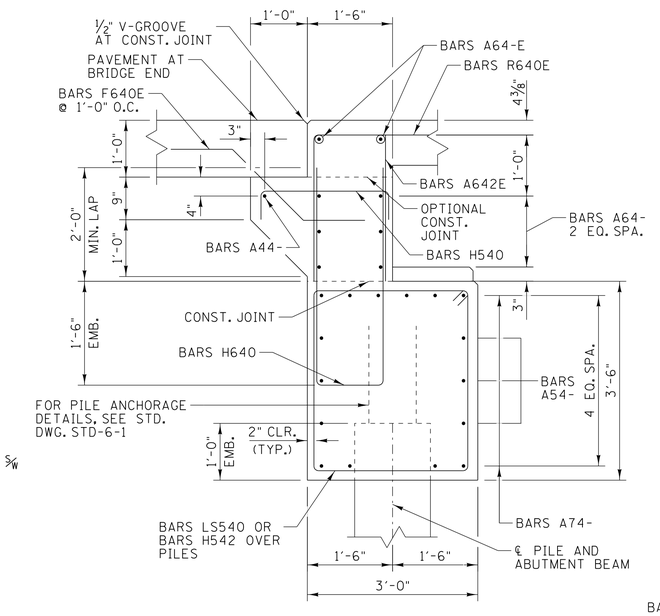

SECTION "B"-"B"
SCALE: ¾" = 1'-0"

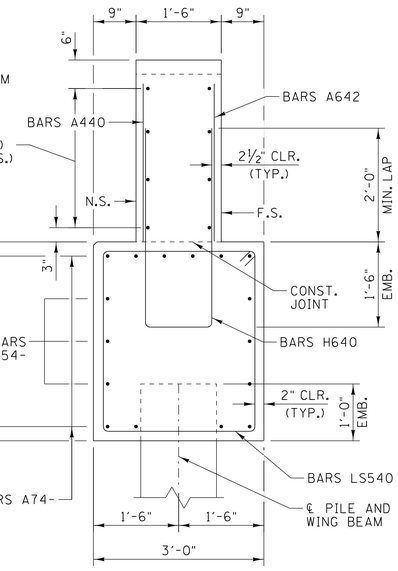

SECTION C-C
SCALE: ¾" = 1'-0"

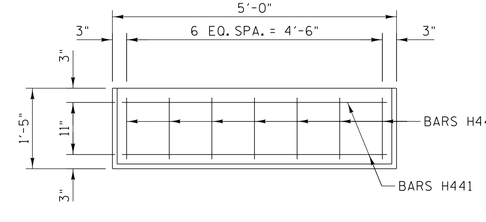

PLAN

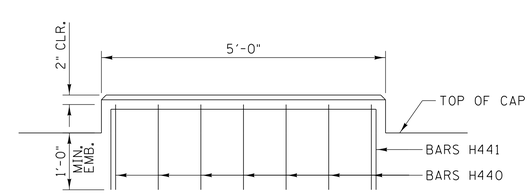

ELEVATION

RISER BLOCK REINFORCING DETAIL
SCALE: ¾" = 1'-0"

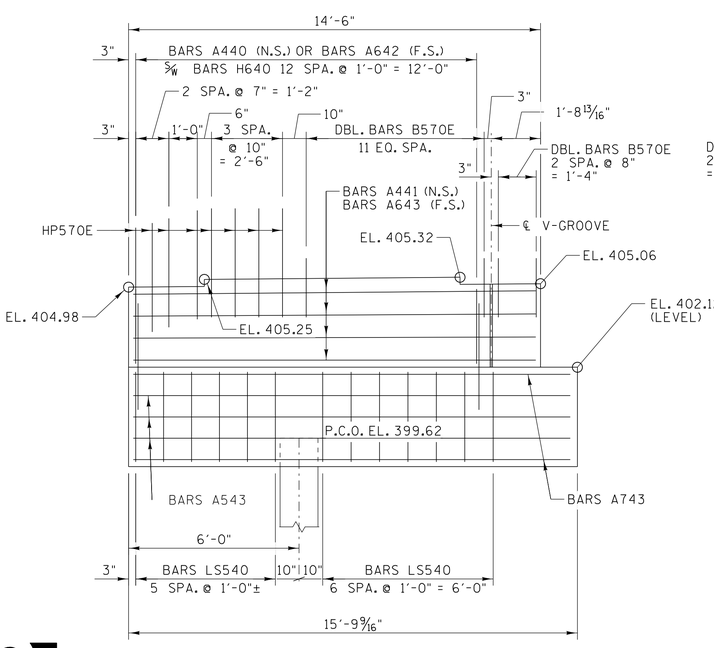

ELEVATION "A"-"A"
SCALE: ⅜" = 1'-0"

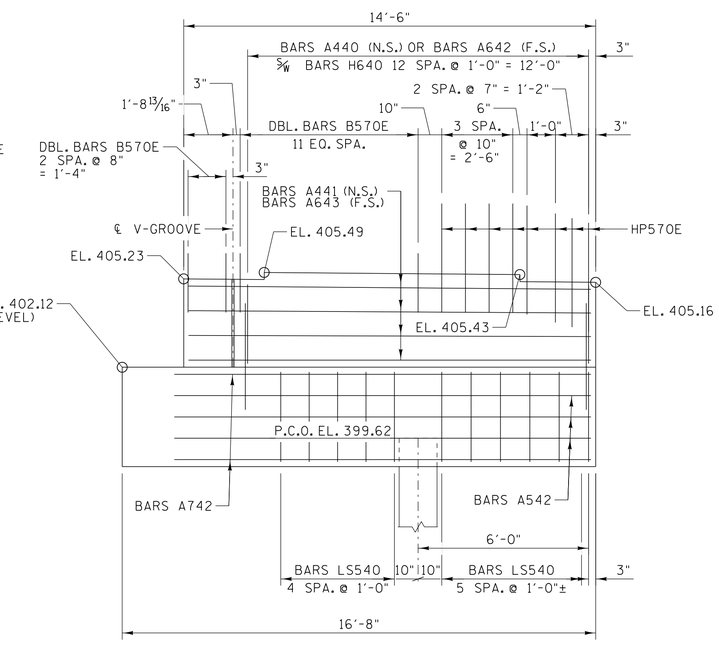

ELEVATION "B"-"B"
SCALE: ⅜" = 1'-0"

GARVER

DESIGNED BY	J.L.HALBROOK	DATE	OCT. 2013
DRAWN BY	H.E.WILLIAMS	DATE	OCT. 2013
SUPERVISED BY	B.W. STATON	DATE	OCT. 2013
CHECKED BY	A. J. KHAIRI	DATE	OCT. 2013

TN D.O.T. ENGINEERING SUPERVISOR M. LAWSON

UNOFFICIAL SET

NOT FOR BIDDING

STATE OF TENNESSEE
DEPARTMENT OF TRANSPORTATION

ABUTMENT NO. 1 DETAILS

STATE ROUTE 57 OVER
CYPRESS CREEK
BRIDGE I.D. NO. 55SR0570005
LOG MILE 8.25
STATION 24+29.45
MCNAIRY COUNTY
2014

BR-115-88

JLHalbrook 8/6/2014 5:11:32 PM
WORKSPACE: TDOT Bridge
\\gltdc01\LTProjects\2010\10017610 - TDOT - Bridge Repair over Cypress Creek\Drawings\BRG\BR-115-88.dgn

PROJECT NO.	YEAR	SHEET NO.
55008-3242-04	2014	

REVISIONS

NO.	DATE	BY	BRIEF DESCRIPTION

NOTES:

1. RISER BLOCKS TO BE POURED MONOLITHICALLY WITH THE ABUTMENT BEAM.
2. NOT LESS THAN HALF OF THE SLAB IN THE END SPAN SHALL BE POURED PRIOR TO, OR CONCURRENTLY WITH, PLACEMENT OF ANY PART OF THE ABUTMENT BACKWALL. AT LEAST THE TOP 12 INCHES OF THE BACKWALL SHALL BE POURED CONCRRENTLY WITH THE END OF SLAB.
3. COST OF BRIDGE RAIL AND POST IS TO BE INCLUDED IN THE UNIT PRICE BID FOR THE BRIDGE RAIL SYSTEM.
4. ELASTOMERIC PADS SHALL BE IN PLACE A MINIMUM OF ONE DAY BEFORE BEING DISTURBED BY SETTING BEAMS. PLACE RUBBER BONDING CEMENT IN SUCH A WAY THAT VISIBLE CONCRETE SURFACES WILL NOT BE STAINED.
5. WHEN POURING WINGWALLS, PROVISIONS SHALL BE MADE FOR SETTING REINFORCING STEEL FOR WINGPOSTS AND PARAPETS. FOR DETAILS OF WINGPOSTS AND PARAPET, SEE STD. DWG. NO. STD-1-1SS.
6. WINGBEAM PILES SHALL BE DRIVEN TO THE PLAN'S TIP ELEVATION OR REFUSAL. SEISMIC ATTACHMENT IS NOT REQUIRED FOR WINGBEAM PILES.
7. SEE STANDARD DRAWING STD-6-1 FOR PILE DETAILS AND NOTES.
8. SEE STANDARD DRAWING STD-6-1 FOR PILE ANCHORAGE DETAILS.
9. SEE DWG. NO. BR-115-90 FOR SECTION "A"-"A", SECTION "B"-"B", ELEVATION "A"-"A", AND ELEVATION "B"-"B".

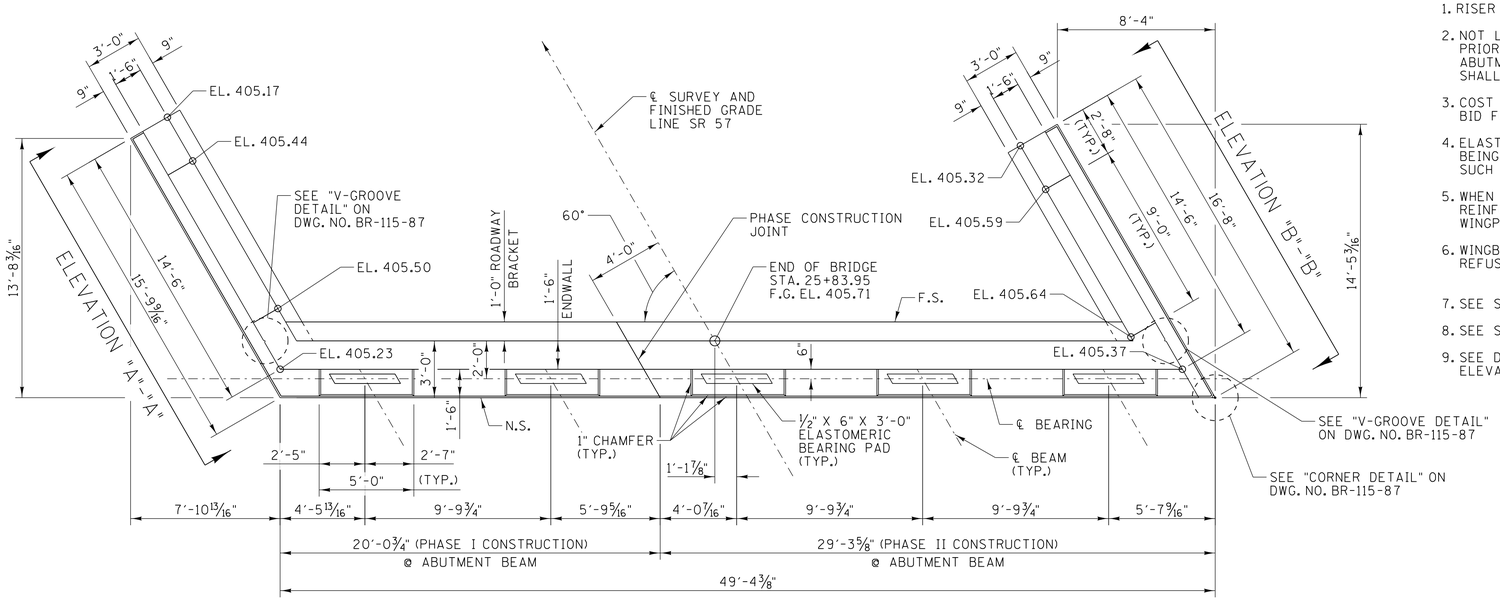

PLAN
SCALE: ¼" = 1'-0"

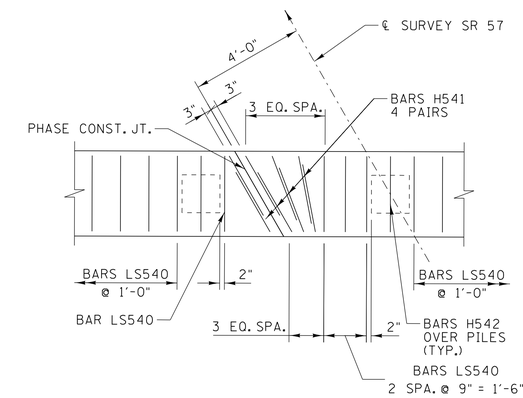

DETAIL "A"
SCALE: ⅜" = 1'-0"
(PLAN VIEW)

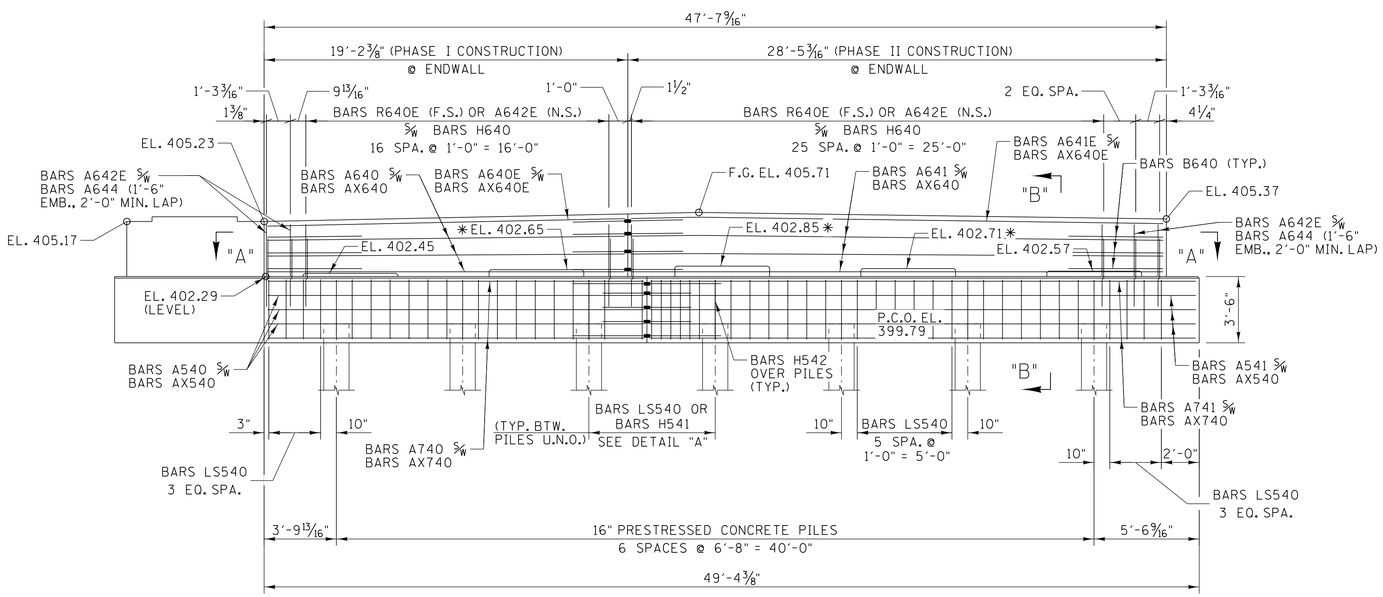

ELEVATION
SCALE: ¼" = 1'-0"
(LOOKING AHEAD ON SURVEY)

✱ DENOTES RISER BLOCKS TO BE REINFORCED. SEE "RISER BLOCK REINFORCING DETAIL" ON DWG. NO. BR-115-88.

ESTIMATED QUANTITIES

CLASS "A" CONCRETE (BRIDGES) C.Y.	STEEL BAR REINFORCEMENT (BRDIGES) LB.	EPOXY COATED REINFORCING STEEL LB.
43	5,480	1,208

UNOFFICIAL SET

NOT FOR BIDDING

STATE OF TENNESSEE
DEPARTMENT OF TRANSPORTATION

ABUTMENT NO. 2

STATE ROUTE 57 OVER CYPRESS CREEK
BRIDGE I.D. NO. 55SR0570005
LOG MILE 8.25
STATION 24+29.45
MCNAIRY COUNTY
2014

GARVER

DESIGNED BY	J. L. HALBROOK	DATE	OCT. 2013
DRAWN BY	H.E.WILLIAMS	DATE	OCT. 2013
SUPERVISED BY	B.W. STATON	DATE	OCT. 2013
CHECKED BY	A.J. KHAIRI	DATE	OCT. 2013

TN D.O.T. ENGINEERING SUPERVISOR M. LAWSON

JLHalbrook 8/6/2014 5:41:32 PM
WORKSPACE: TDOT Bridge
\\gltdc01\LitProjects\2010\0017610 - TDOT - Bridge Repair over Cypress Creek\Drawings\BRG\BR-115-89.dgn

PROJECT NO.	YEAR	SHEET NO.
55008-3242-04	2014	

REVISIONS

NO.	DATE	BY	BRIEF DESCRIPTION

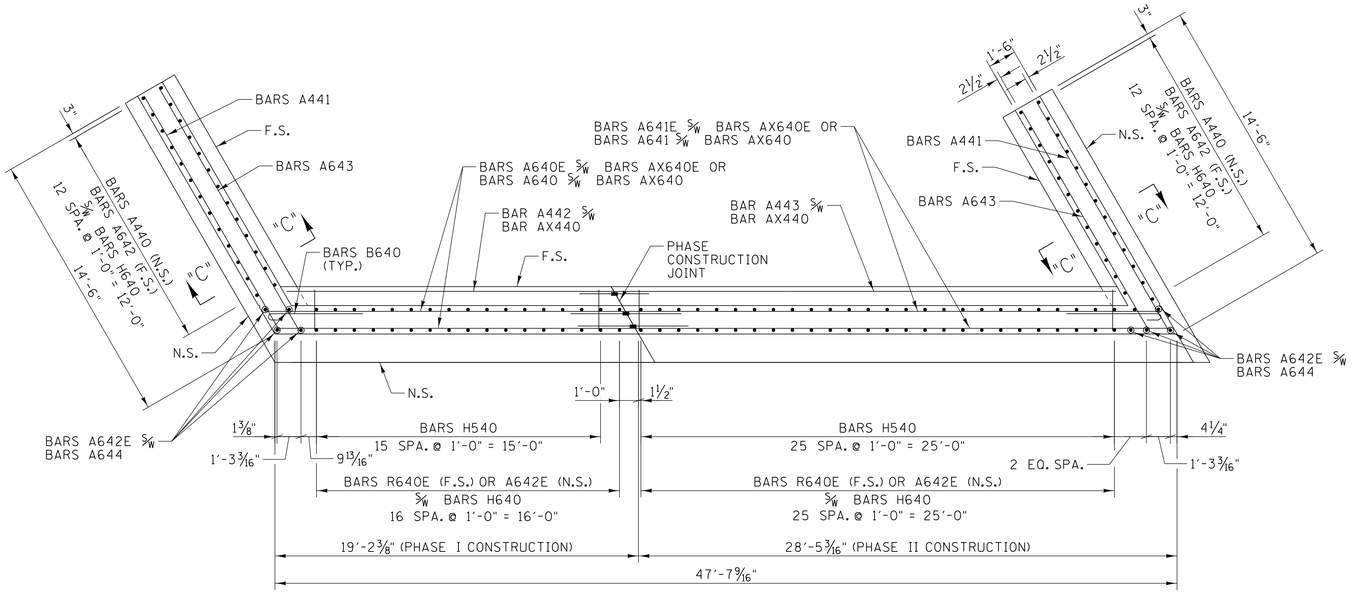

SECTION A-A

SCALE: ¼" = 1'-0"

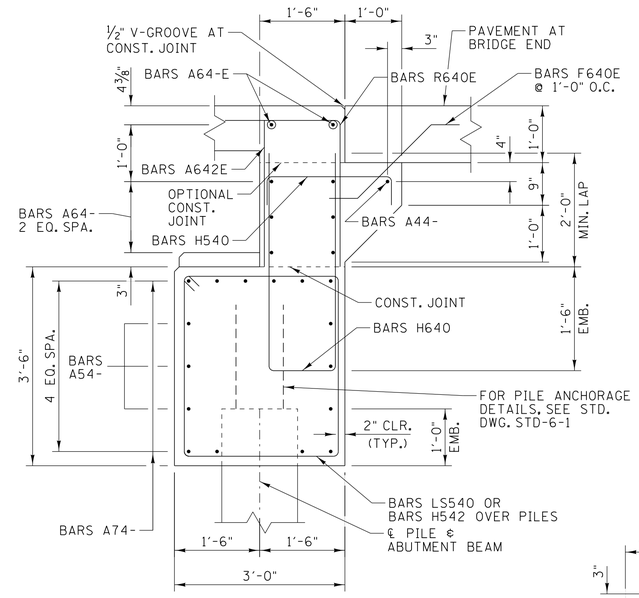

SECTION "B"-"B"

SCALE: ¾" = 1'-0"

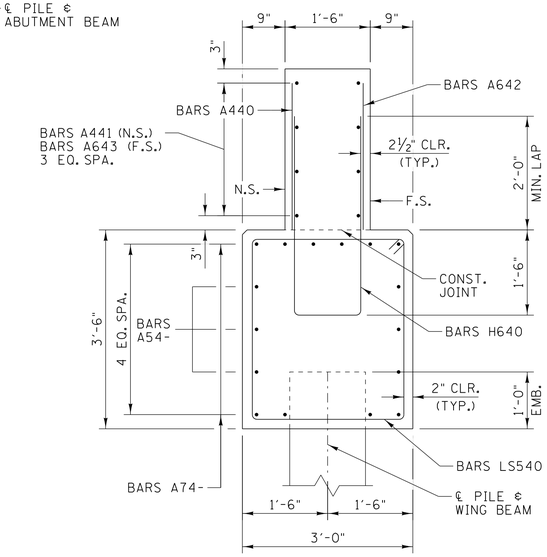

SECTION "C"-"C"

SCALE: ¾" = 1'-0"

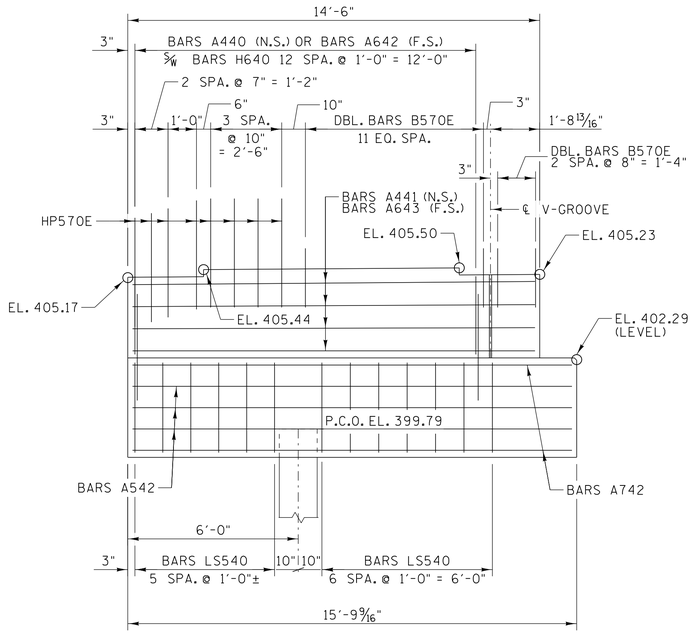

ELEVATION "A"-"A"

SCALE: ⅜" = 1'-0"

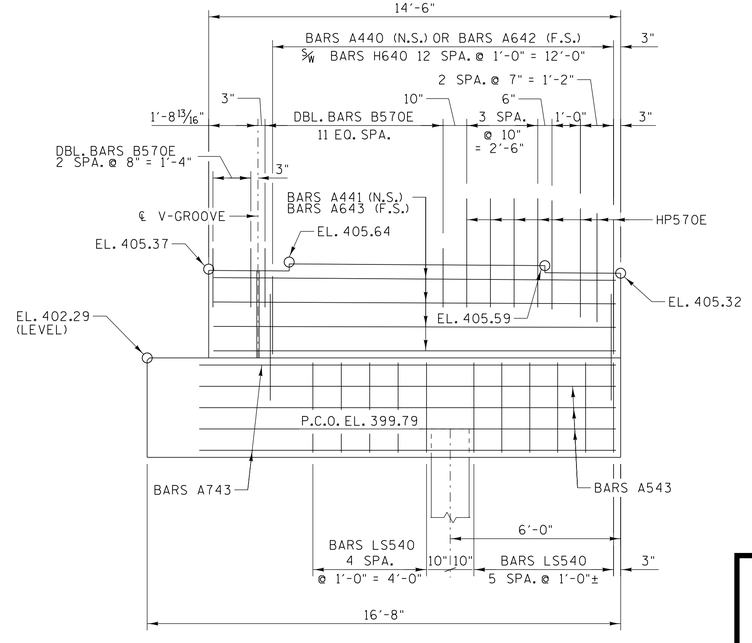

ELEVATION "B"-"B"

SCALE: ⅜" = 1'-0"

UNOFFICIAL SET

NOT FOR BIDDING

STATE OF TENNESSEE
DEPARTMENT OF TRANSPORTATION

ABUTMENT NO. 2 DETAILS

STATE ROUTE 57 OVER
CYPRESS CREEK
BRIDGE I.D. NO. 55SR0570005
LOG MILE 8.25
STATION 24+29.45
MCNAIRY COUNTY
2014

BR-115-90

GARVER

DESIGNED BY	J.L.HALBROOK	DATE	OCT. 2013
DRAWN BY	H.E.WILLIAMS	DATE	OCT. 2013
SUPERVISED BY	B.W. STATON	DATE	OCT. 2013
CHECKED BY	A. J. KHAIRI	DATE	OCT. 2013

TN D.O.T. ENGINEERING SUPERVISOR M. LAWSON

JLHalbrook 8/6/2014 5:11:33 PM
WORKSPACE: TDOT Bridge
\\gltdc01\LTProjects\2010\0007610 - TDOT - Bridge Repair over Cypress Creek\Drawings\BRG\BR-115-90.dgn

PROJECT NO.	YEAR	SHEET NO.
55008-3242-04	2014	

REVISIONS

NO.	DATE	BY	BRIEF DESCRIPTION

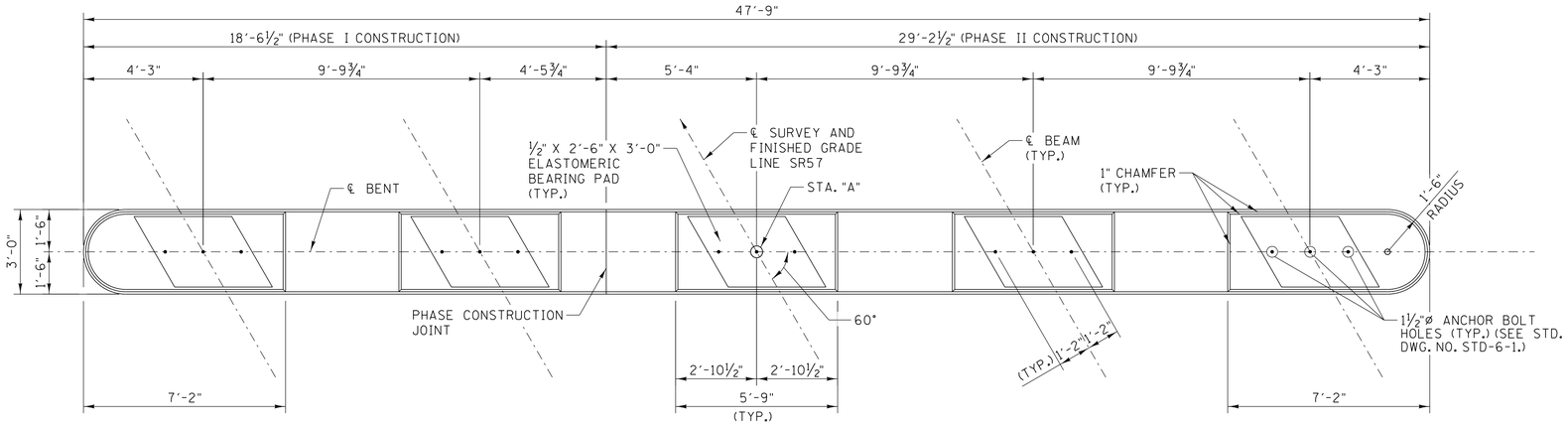

PLAN
SCALE: ⅜" = 1'-0"

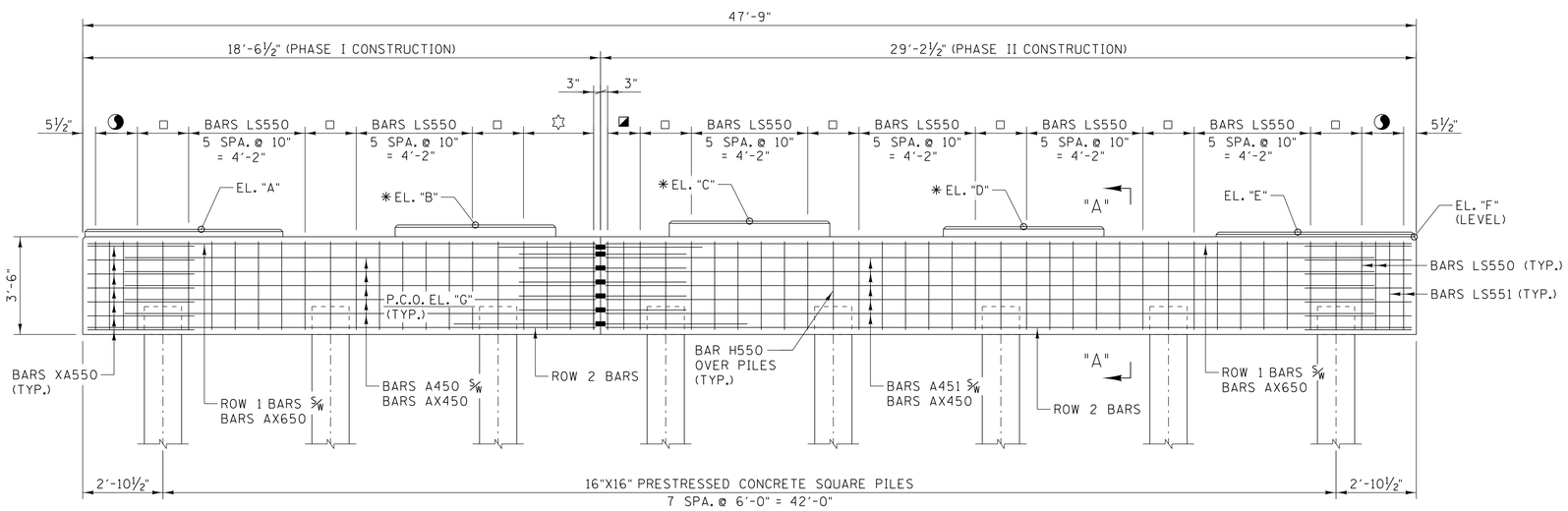

ELEVATION
(LOOKING AHEAD ON SURVEY)
SCALE: ⅜" = 1'-0"

✳✳ ELEVATION GIVEN @ ℄ BENT AND ℄ BEAM

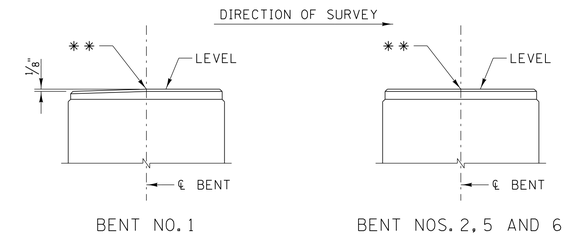

RISER BLOCK SLOPE DETAIL
(TYP. EACH RISER BLOCK)
SCALE: NTS

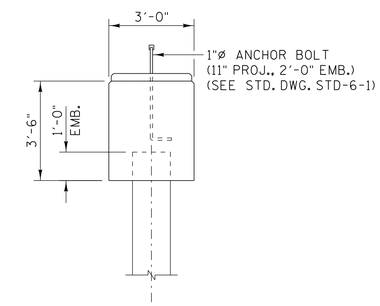

END ELEVATION
SCALE: ⅜" = 1'-0"

NOTES:

1. WHEN POURING CAP BEAM, PROVISIONS SHALL BE MADE FOR SETTING ANCHOR BOLTS, SEE STANDARD DRAWING STD-6-1. BOLT PROJECTION 11".
2. RISER BLOCKS TO BE POURED MONOLITHICALLY WITH CAP BEAM.
3. ELASTOMERIC PADS SHALL BE IN PLACE A MINIMUM OF ONE DAY BEFORE BEING DISTURBED BY SETTING BEAMS ON CONCRETE. PLACE RUBBER BONDING CEMENT IN SUCH A WAY THAT VISIBLE CONCRETE SURFACES WILL NOT BE STAINED.
4. SEE STANDARD DRAWING STD-6-1 FOR PILE DETAILS AND NOTES.
5. SEE STANDARD DRAWING STD-6-1 FOR PILE ANCHORAGE DETAILS.
6. SEE DWG. NO. BR-115-92 FOR SECTION "A"-"A" AND REINFORCING FOR ROWS 1 & 2.

✳ DENOTES RISER BLOCKS TO BE REINFORCED. SEE RISER BLOCK REINFORCING DETAILS ON DWG. NO. BR-115-92.

□ DENOTES 2 SPA. @ 11" = 1'-10"

☆ DENOTES BARS LS550 3 SPA. @ 10" = 2'-6"

◪ DENOTES BARS LS550 2 SPA. @ 7" = 1'-2"

◐ DENOTES 3 SPA. @ 6" = 1'-6"

TABLE OF STATIONS

LOCATION	STA. "A"
BENT NO. 1	23+11.95
BENT NO. 2	23+48.95
BENT NO. 5	25+09.95
BENT NO. 6	25+46.95

TABLE OF ELEVATIONS

LOCATION	EL. "A"	EL. "B"	EL. "C"	EL. "D"	EL. "E"	EL. "F"	EL. "G"
BENT NO. 1	402.62	402.76	402.91	402.71	402.51	402.34	399.84
BENT NO. 2	402.77	402.93	403.08	402.89	402.70	402.53	400.03
BENT NO. 5	402.79	402.98	403.16	403.01	402.85	402.62	400.12
BENT NO. 6	402.64	402.84	403.03	402.88	402.73	402.47	399.97

ESTIMATED QUANTITIES

LOCATION	CLASS "A" CONCRETE (BRIDGES) C.Y.	STEEL BAR REINFORCEMENT (BRIDGES) LB.
BENT NO. 1	19	2,617
BENT NO. 2	19	2,617
BENT NO. 5	19	2,617
BENT NO. 6	19	2,617

STATE OF TENNESSEE
DEPARTMENT OF TRANSPORTATION

BENT NOS. 1, 2, 5, & 6

STATE ROUTE 57 OVER
CYPRESS CREEK
BRIDGE I.D. NO. 55SR0570005
LOG MILE 8.25
STATION 24+29.45
MCNAIRY COUNTY
2014

UNOFFICIAL SET

NOT FOR BIDDING

GARVER

DESIGNED BY J.L. HALBROOK DATE OCT. 2013
DRAWN BY H.E. WILLIAMS DATE OCT. 2013
SUPERVISED BY B.W. STATON DATE OCT. 2013
CHECKED BY A. J. KHAIRI DATE OCT. 2013

TN D.O.T. ENGINEERING SUPERVISOR M. LAWSON

JLHalbrook 8/6/2014 5:41:33 PM
WORKSPACE: TDOT Bridge
\\glitdc01\LitProjects\2010\0017610 - TDOT - Bridge Repair over Cypress Creek\Drawings\BRG\BR-115-91.dgn

PROJECT NO.	YEAR	SHEET NO.
55008-3242-04	2014	

REVISIONS

NO.	DATE	BY	BRIEF DESCRIPTION

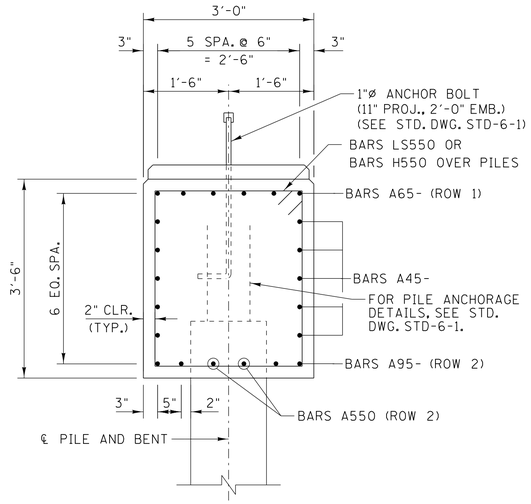

SECTION "A"-"A"

SCALE: ¾" = 1'-0"

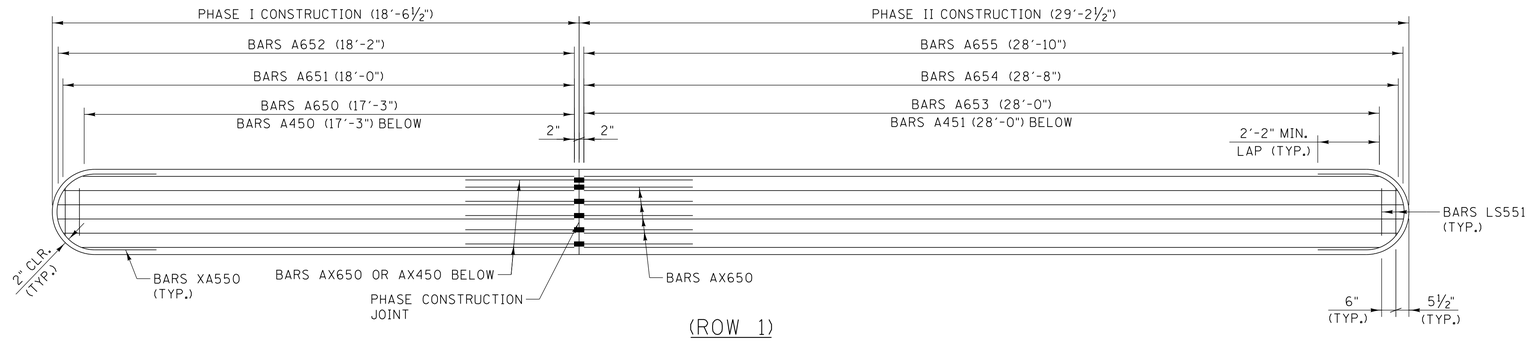

(ROW 1)

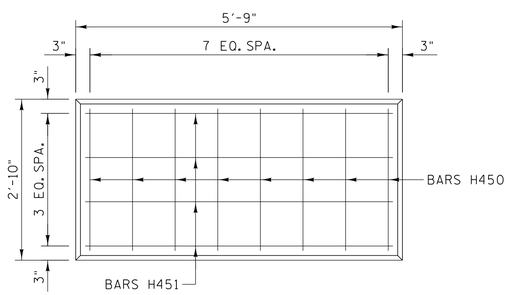

PLAN

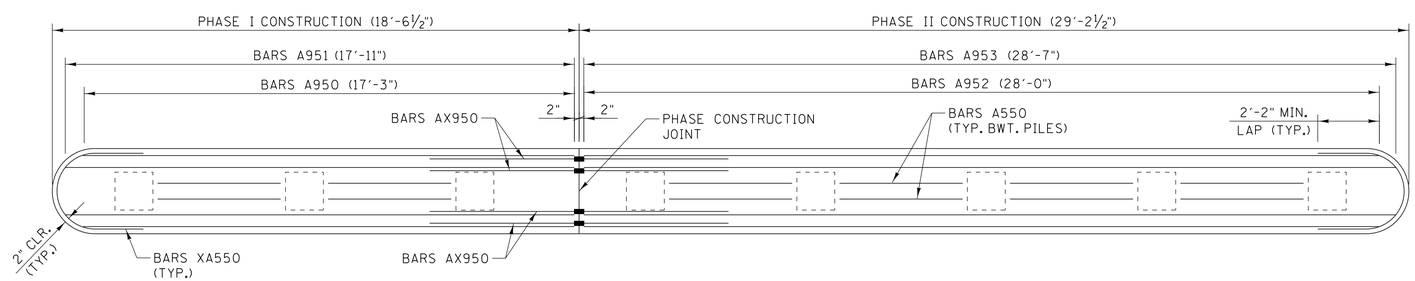

(ROW 2)

PLAN OF MAIN REINFORCEMENT

SCALE: ⅜" = 1'-0"

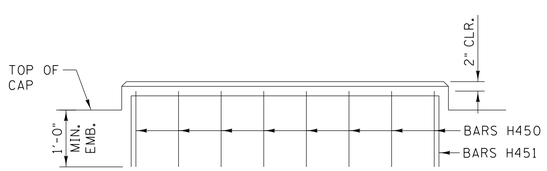

ELEVATION

RISER BLOCK REINFORCING DETAILS

SCALE: NTS

GARVER

DESIGNED BY	J.L. HALBROOK	DATE	OCT. 2013
DRAWN BY	H.E. WILLIAMS	DATE	OCT. 2013
SUPERVISED BY	B.W. STATON	DATE	OCT. 2013
CHECKED BY	A. J. KHAIRI	DATE	OCT. 2013

TN D.O.T. ENGINEERING SUPERVISOR M. LAWSON

UNOFFICIAL SET

NOT FOR BIDDING

STATE OF TENNESSEE
DEPARTMENT OF TRANSPORTATION

BENT NOS. 1, 2, 5, & 6 DETAILS

STATE ROUTE 57 OVER
CYPRESS CREEK
BRIDGE I.D. NO. 55SR0570005
LOG MILE 8.25
STATION 24+29.45
MCNAIRY COUNTY
2014

BR-115-92

JLHalbrook 8/6/2014 5:16:34 PM
WORKSPACE: TDOT Bridge
\\gltdc01\LITProjects\2010\00176\0 - TDOT - Bridge Repair over Cypress Creek\Drawings\BRG\BR-115-92.dgn

PROJECT NO.	YEAR	SHEET NO.
55008-3242-04	2014	

REVISIONS

NO.	DATE	BY	BRIEF DESCRIPTION

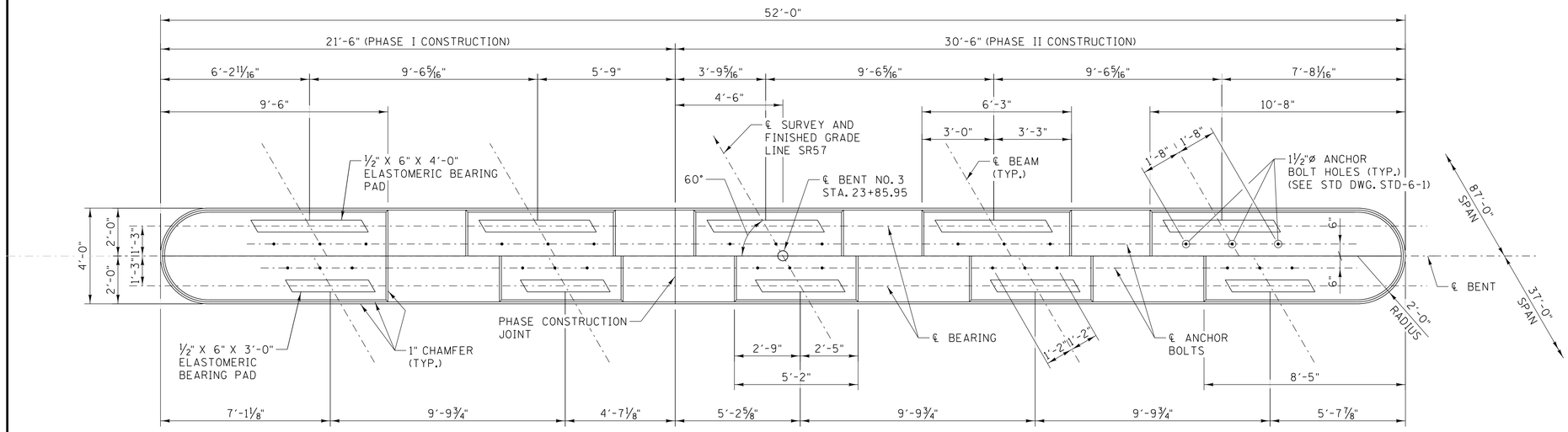

PLAN

SCALE: 3/8" = 1'-0"

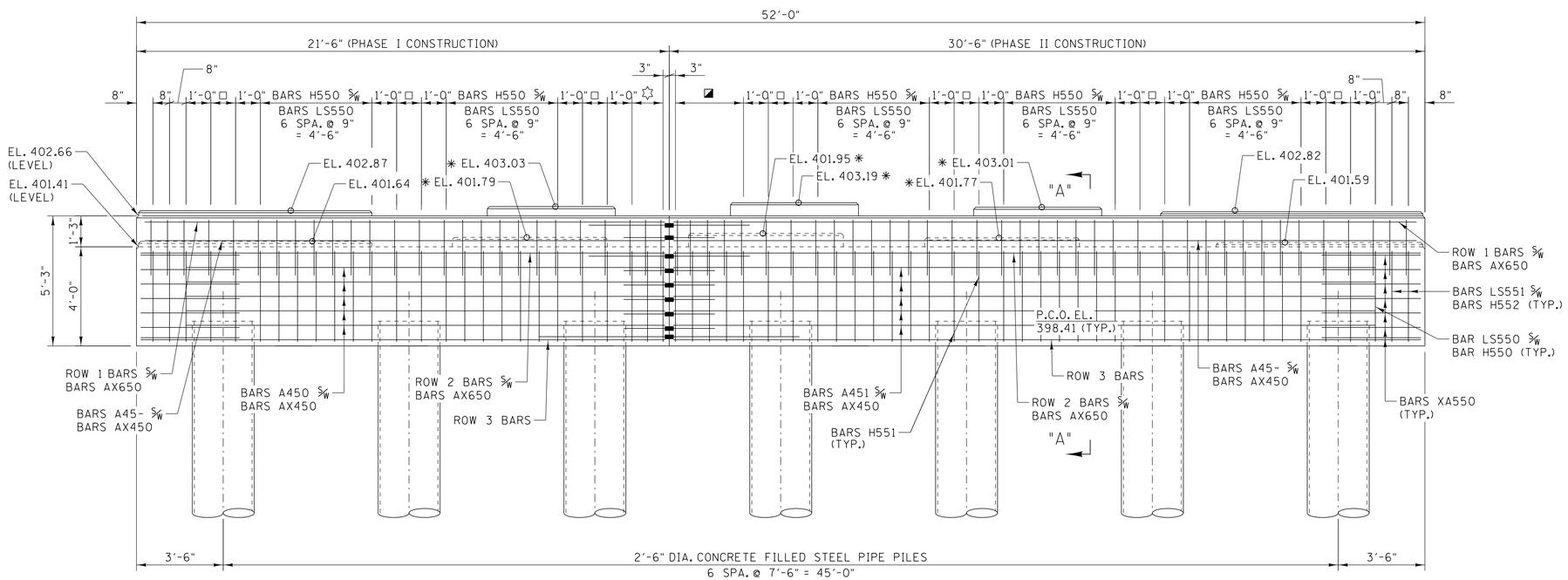

ELEVATION

(LOOKING AHEAD ON SURVEY)
SCALE: 3/8" = 1'-0"

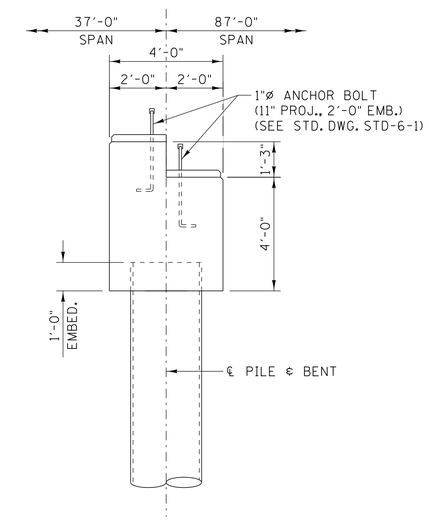

END ELEVATION

SCALE: 3/8" = 1'-0"

ESTIMATED QUANTITIES	
CLASS "A" CONCRETE (BRIDGES) C.Y.	STEEL BAR REINFORCEMENT (BRIDGES) LB.
35	4,056

✳ DENOTES RISER BLOCKS TO BE REINFORCED. SEE RISER BLOCK REINFORCING DETAILS ON DWG. NO. BR-115-95.

□ DENOTES BARS H550 5/W BARS H551 1 SPA. @ 1'-0".

☆ DENOTES BARS H550 5/W BARS LS550 2 SPA. @ 7 1/2" = 1'-3".

◪ DENOTES BARS H550 5/W BARS LS550 4 SPA. @ 7"± = 2'-3".

NOTES:

1. WHEN POURING CAP BEAM, PROVISIONS SHALL BE MADE FOR SETTING ANCHOR BOLTS, SEE STD. DWG. STD-6-1. BOLT PROJECTION 11".
2. RISER BLOCKS TO BE POURED MONOLITHICALLY WITH CAP BEAM.
3. ELASTOMERIC PADS SHALL BE IN PLACE A MINIMUM OF ONE DAY BEFORE BEING DISTURBED BY SETTING BEAMS ON CONCRETE. PLACE RUBBER BONDING CEMENT IN SUCH A WAY THAT VISIBLE CONCRETE SURFACES WILL NOT BE STAINED.
4. SEE DWG. NO. BR-115-96 FOR PILE DETAILS AND NOTES.
5. SEE DWG. NO. BR-115-96 FOR PILE ANCHORAGE DETAILS.
6. SEE STD. DWG. STD-14-3 FOR ELASTOMERIC BEARING PAD DETAILS. USE PADS DESIGNED FOR ABUTMENTS AT THIS BENT LOCATION.
7. SEE DWG. NO. BR-115-95 FOR SECTION "A"-"A" AND ROWS 1-3 REINFORCING.

UNOFFICIAL SET

NOT FOR BIDDING

STATE OF TENNESSEE
DEPARTMENT OF TRANSPORTATION

BENT NO. 3

STATE ROUTE 57 OVER
CYPRESS CREEK
BRIDGE I.D. NO. 55SR0570005
LOG MILE 8.25
STATION 24+29.45
MCNAIRY COUNTY
2014

GARVER

DESIGNED BY	J.L. HALBROOK	DATE	OCT. 2013
DRAWN BY	H.E. WILLIAMS	DATE	OCT. 2013
SUPERVISED BY	B.W. STATON	DATE	OCT. 2013
CHECKED BY	A. J. KHAIRI	DATE	OCT. 2013

TN D.O.T. ENGINEERING SUPERVISOR M. LAWSON

BR-115-93

JLHalbrook 8/6/2014 5:41:34 PM
WORKSPACE: TDOT Bridge
\\gitdc01\LTProjects\2010\0007610 - TDOT - Bridge Repair over Cypress Creek\Drawings\BRG\BR-115-93.dgn

PROJECT NO.	YEAR	SHEET NO.
55008-3242-04	2014	

REVISIONS

NO.	DATE	BY	BRIEF DESCRIPTION

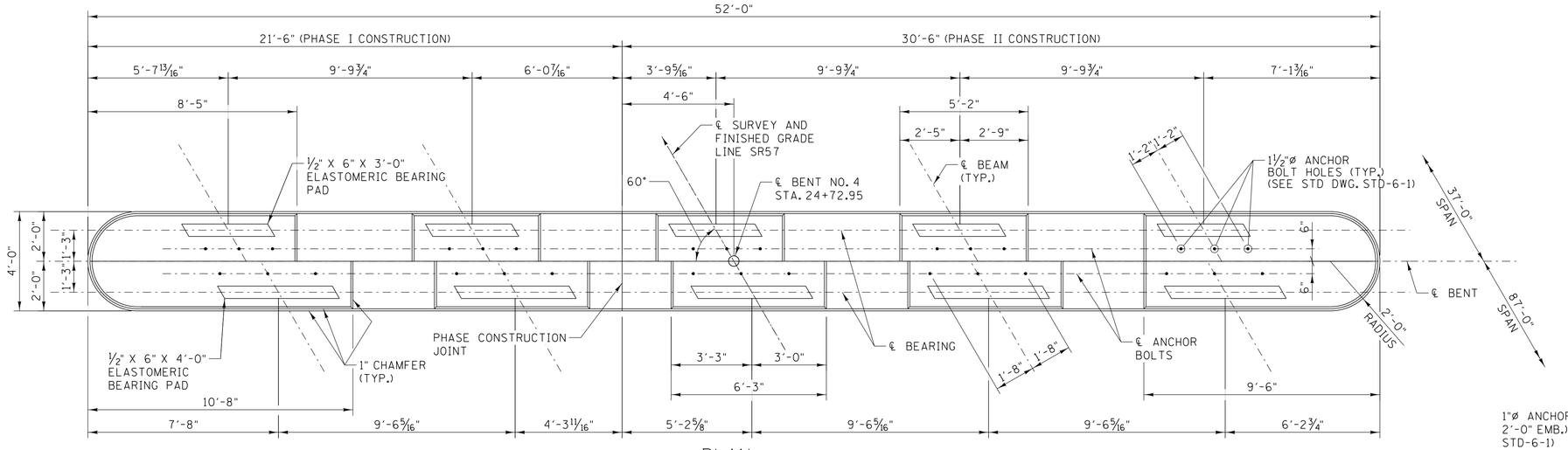

PLAN

SCALE: 3/8" = 1'-0"

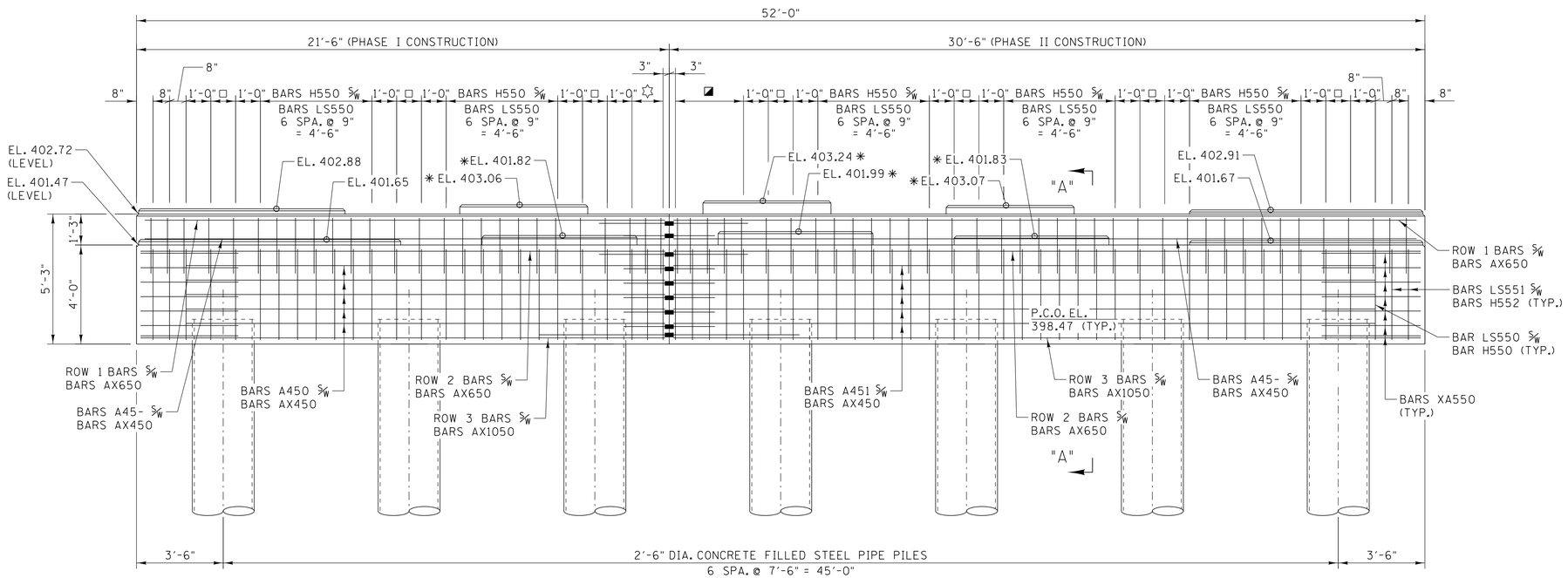

ELEVATION

SCALE: 3/8" = 1'-0"

(LOOKING AHEAD ON SURVEY)

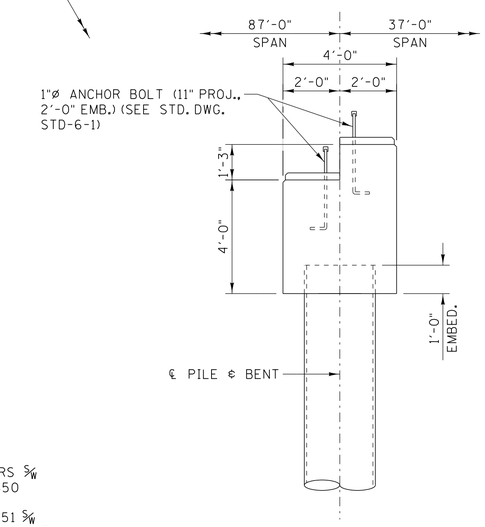

END ELEVATION

SCALE: 3/8" = 1'-0"

ESTIMATED QUANTITIES	
CLASS "A" CONCRETE (BRIDGES) C.Y.	STEEL BAR REINFORCEMENT (BRIDGES) LB.
35	4,056

* DENOTES RISER BLOCKS TO BE REINFORCED. SEE RISER BLOCK REINFORCING DETAILS ON DWG. NO. BR-115-95.

□ DENOTES BARS H550 5/W BARS H551 1 SPA. @ 1'-0".

☆ DENOTES BARS H550 5/W BARS LS550 2 SPA. @ 7 1/2" = 1'-3".

◪ DENOTES BARS H550 5/W BARS LS550 4 SPA. @ 7"± = 2'-3".

NOTES:

1. WHEN POURING CAP BEAM, PROVISIONS SHALL BE MADE FOR SETTING ANCHOR BOLTS, SEE STD. DWG. STD-6-1. BOLT PROJECTION 11".
2. RISER BLOCKS TO BE POURED MONOLITHICALLY WITH CAP BEAM.
3. ELASTOMERIC PADS SHALL BE IN PLACE A MINIMUM OF ONE DAY BEFORE BEING DISTURBED BY SETTING BEAMS ON CONCRETE. PLACE RUBBER BONDING CEMENT IN SUCH A WAY THAT VISIBLE CONCRETE SURFACES WILL NOT BE STAINED.
4. SEE DWG. NO. BR-115-96 FOR PILE DETAILS AND NOTES.
5. SEE DWG. NO. BR-115-96 FOR PILE ANCHORAGE DETAILS.
6. SEE STD. DWG. STD-14-3 FOR ELASTOMERIC BEARING PAD DETAILS. USE PADS DESIGNED FOR ABUTMENTS AT THIS BENT LOCATION.
7. SEE DWG. NO. BR-115-95 FOR SECTION "A"-"A" AND ROWS 1-3 REINFORCING.

UNOFFICIAL SET

NOT FOR BIDDING

STATE OF TENNESSEE
DEPARTMENT OF TRANSPORTATION

BENT NO. 4

STATE ROUTE 57 OVER
CYPRESS CREEK
BRIDGE I.D. NO. 55SR0570005
LOG MILE 8.25
STATION 24+29.45
MCNAIRY COUNTY
2014

GARVER

DESIGNED BY	J.L. HALBROOK	DATE	OCT. 2013
DRAWN BY	H.E. WILLIAMS	DATE	OCT. 2013
SUPERVISED BY	B.W. STATON	DATE	OCT. 2013
CHECKED BY	A. J. KHAIRI	DATE	OCT. 2013

TN D.O.T. ENGINEERING SUPERVISOR M. LAWSON

BR-115-94

JLHalbrook 8/6/2014 5:11:35 PM
WORKSPACE: TDOT Bridge
\\gitdc01\LTProjects\2010\0007610 - TDOT - Bridge Repair over Cypress Creek\Drawings\BRG\BR-115-94.dgn

PROJECT NO.	YEAR	SHEET NO.
55008-3242-04	2014	

REVISIONS

NO.	DATE	BY	BRIEF DESCRIPTION

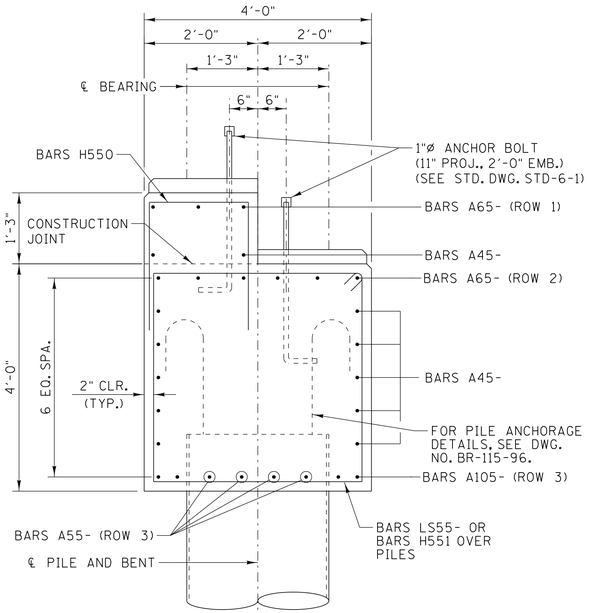

SECTION "A"-"A"

(BENT NO. 3)
SCALE: ¾" = 1'-0"

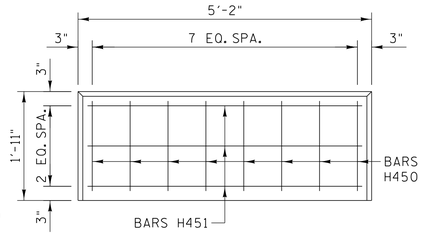

PLAN A

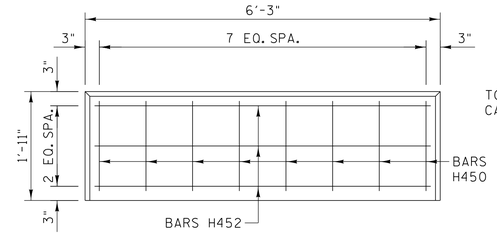

PLAN B

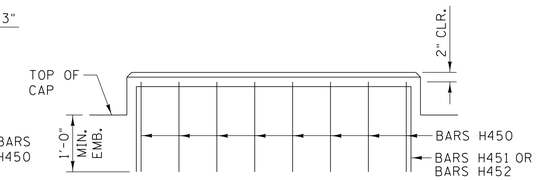

ELEVATION

RISER BLOCK REINFORCING DETAILS

SCALE: NTS

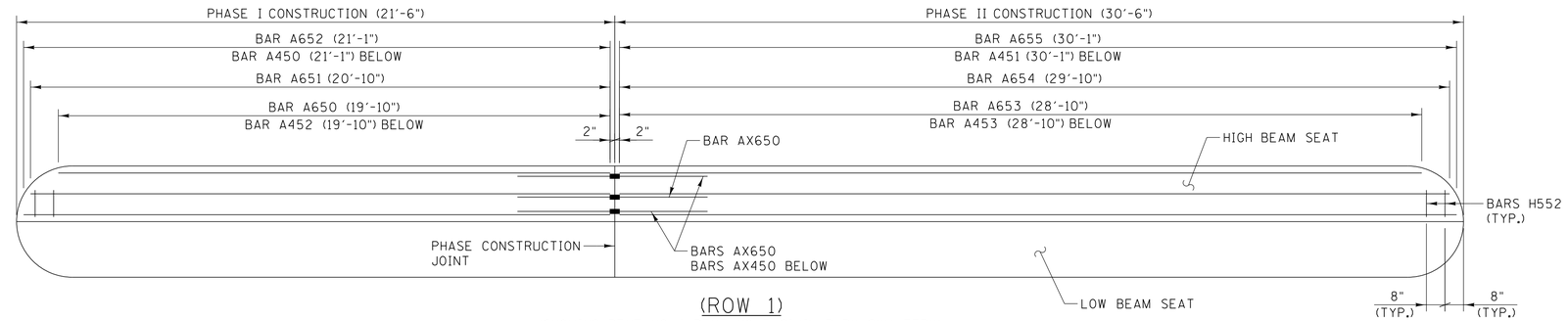

(ROW 1)

(SHOWING BENT NO. 4, BENT NO. 3 SIMILAR BY SYMMETRY)

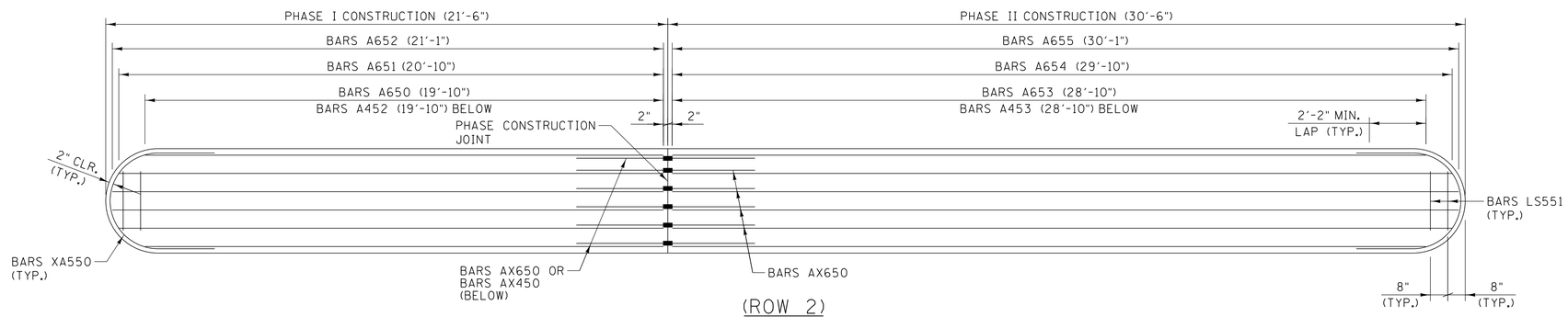

(ROW 2)

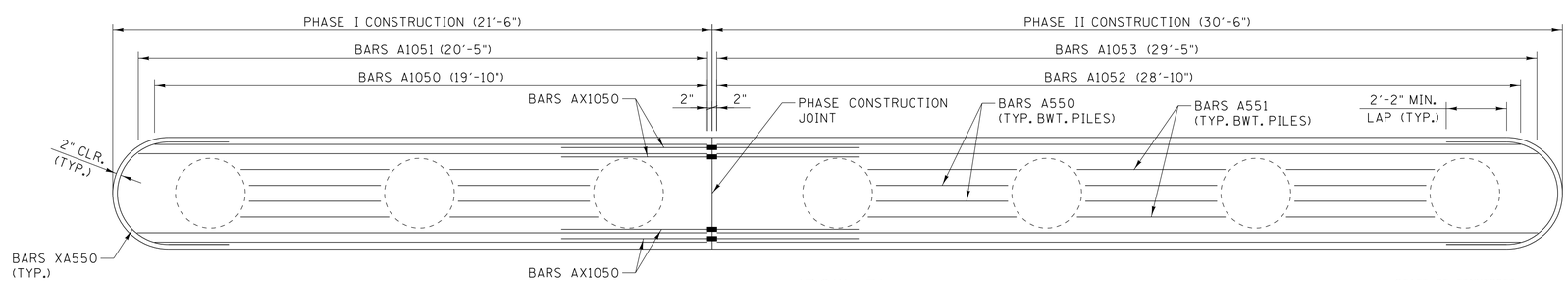

(ROW 3)

PLAN OF MAIN REINFORCEMENT

SCALE: ⅜" = 1'-0"

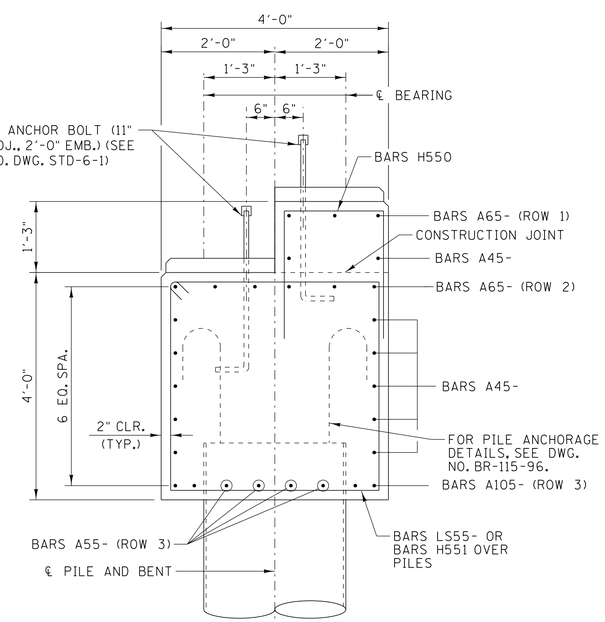

SECTION "A"-"A"

(BENT NO. 4)
SCALE: ¾" = 1'-0"

GARVER

DESIGNED BY J.L. HALBROOK DATE OCT. 2013
DRAWN BY H.E. WILLIAMS DATE OCT. 2013
SUPERVISED BY B.W. STATON DATE OCT. 2013
CHECKED BY A. J. KHAIRI DATE OCT. 2013

TN D.O.T. ENGINEERING SUPERVISOR M. LAWSON

UNOFFICIAL SET

NOT FOR BIDDING

STATE OF TENNESSEE
DEPARTMENT OF TRANSPORTATION

BENT NOS. 3 & 4 DETAILS

STATE ROUTE 57 OVER
CYPRESS CREEK
BRIDGE I.D. NO. 55SR0570005
LOG MILE 8.25
STATION 24+29.45
MCNAIRY COUNTY
2014

BR-115-95

JLHalbrook 8/6/2014 5:41:35 PM
WORKSPACE: TDOT Bridge
\\gltdc01\LTProjects\2010\0007610 - TDOT - Bridge Repair over Cypress Creek\Drawings\BRG\BR-115-95.dgn

PROJECT NO.	YEAR	SHEET NO.
55008-3242-04	2014	

REVISIONS

NO.	DATE	BY	BRIEF DESCRIPTION

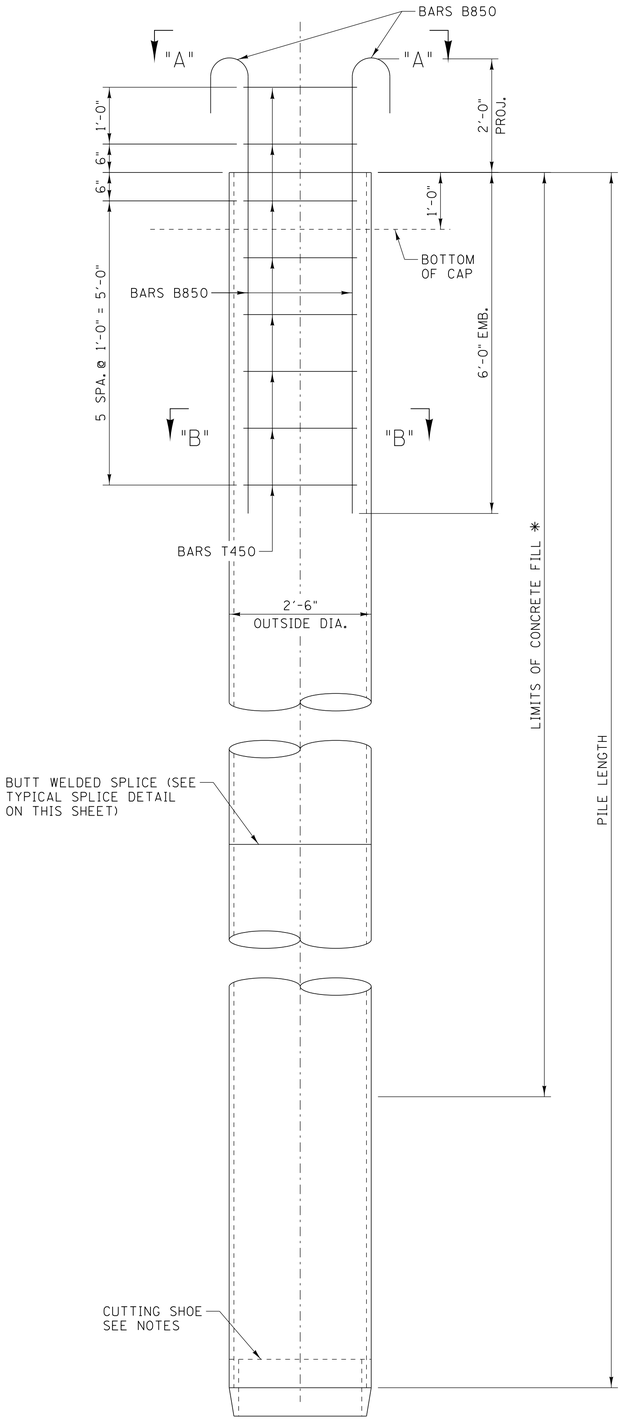

PIPE PILE ELEVATION
SCALE: NTS

✱✱ HOOKS MAY BE SLIGHTLY ROTATED FROM ORIENTATION SHOWN AS NEEDED TO MAINTAIN MINIMUM COVER AND TO REDUCE INTERFERENCE WITH OTHER BARS.

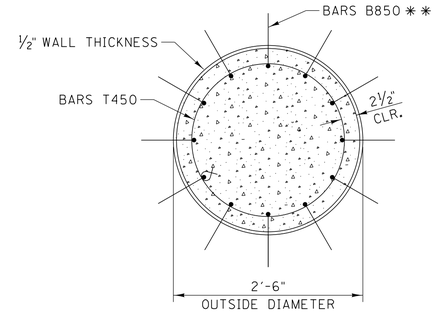

VIEW "A"-"A"
SCALE: 1" = 1'-0"

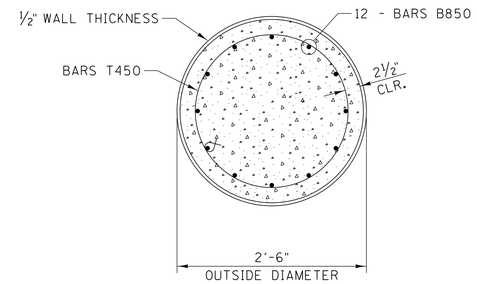

SECTION "B"-"B"
SCALE: 1" = 1'-0"

✱ STEEL PIPE PILING SHALL BE FILLED WITH CLASS "A" CONCRETE. THE LIMITS OF CONCRETE SHALL EXTEND FROM THE TOP OF FINISHED PILE TO THE TOP OF THE SOIL PLUG DEVELOPED AT THE PILE TIP OR TO AN ELEVATION 5' ABOVE THE MINIMUM TIP ELEVATION, WHICHEVER IS LOWER. IF TOP OF SOIL PLUG EXTENDS MORE THAN 5' ABOVE THE MINIMUM TIP ELEVATION, THE CONTRACTOR SHALL REMOVE SOIL DOWN TO AN ELEVATION 5' ABOVE THE MINIMUM TIP ELVATION. SEE PILE DATA TABLE ON DWG. NO. BR-115-74 FOR MINIMUM TIP ELEVATION.

NOTES:

1. STEEL PIPE PILING SHALL CONFORM TO ASTM A242, GRADE 2 (FY = 35KSI) AND SHALL BE EITHER SEAMLESS OR SPIRAL BUTT-WELDED.
2. STEEL PIPE PILING SHALL BE DRIVEN WITH OPEN ENDS.
3. ALL CONCRETE IN PIPE PILING SHALL BE CLASS "A".
4. ALL REINFORCING STEEL SHALL CONFORM TO ASTM A615, GRADE 60.
5. PIPE PILE SHALL BE OUTFITTED WITH INSIDE FLANGE OPEN END CUTTING SHOE.
6. SEE DWG. NO. BR-115-74 FOR ADDITIONAL PIPE PILE NOTES.

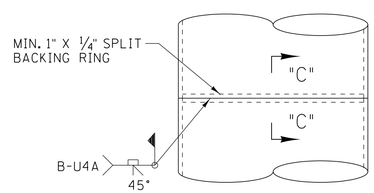

TYPICAL SPLICE DETAIL
SCALE: NTS

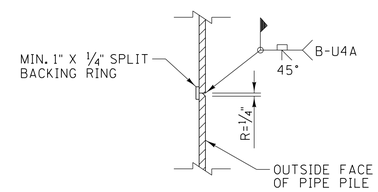

SECTION "C"-"C"
SCALE: NTS

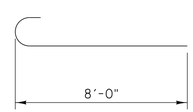

BARS B850

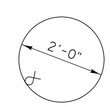

BARS T450

BILL OF STEEL PER PILE

BARS	SIZE	NO. REQ'D	LENGTH
B850	8	12	9'-0"
T450	4	8	7'-1"

ESTIMATED QUANTITIES PER PILE

CLASS "A" CONCRETE (BRIDGES) C.Y.	STEEL BAR REINFORCEMENT (BRIDGES) LB.
6	326

UNOFFICIAL SET

NOT FOR BIDDING

STATE OF TENNESSEE
DEPARTMENT OF TRANSPORTATION

PIPE PILE DETAILS

STATE ROUTE 57 OVER
CYPRESS CREEK
BRIDGE I.D. NO. 55SR0570005
LOG MILE 8.25
STATION 24+29.45
MCNAIRY COUNTY
2014

GARVER

DESIGNED BY B.W. STATON DATE OCT. 2013
DRAWN BY H.E. WILLIAMS DATE OCT. 2013
SUPERVISED BY B.W. STATON DATE OCT. 2013
CHECKED BY A. J. KHAIRI DATE OCT. 2013
TN D.O.T. ENGINEERING SUPERVISOR M. LAWSON

JLHalbrook 8/6/2014 5:11:36 PM
WORKSPACE: TDOT Bridge
\\gltdc01\LTProjects\2010\100176\0 - TDOT - Bridge Repair over Cypress Creek\Drawings\BRG\BR-115-96.dgn

PROJECT NO.	YEAR	SHEET NO.
55008-3242-04	2014	

REVISIONS

NO.	DATE	BY	BRIEF DESCRIPTION

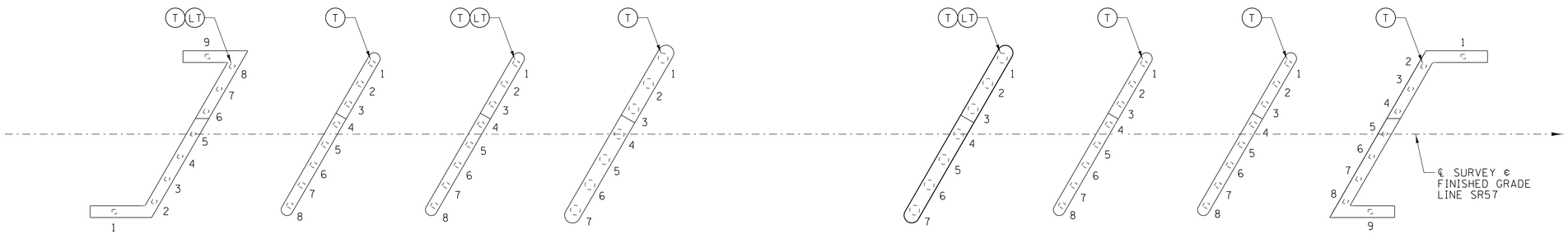

PLAN

(T) DENOTES TEST PILES

(LT) DENOTES LOAD TEST PILES

PILE DATA TABLE

		1	2	3	4	5	6	7	8	9
ABUTMENT NO. 1	PILE CUT-OFF ELEVATION									
	PILE TIP ELEVATION									
	IN PLACE PILE LENGTH									
BENT NO. 1	PILE CUT-OFF ELEVATION									
	PILE TIP ELEVATION									
	IN PLACE PILE LENGTH									
BENT NO. 2	PILE CUT-OFF ELEVATION									
	PILE TIP ELEVATION									
	IN PLACE PILE LENGTH									
BENT NO. 3	PILE CUT-OFF ELEVATION									
	PILE TIP ELEVATION									
	IN PLACE PILE LENGTH									
BENT NO. 4	PILE CUT-OFF ELEVATION									
	PILE TIP ELEVATION									
	IN PLACE PILE LENGTH									
BENT NO. 5	PILE CUT-OFF ELEVATION									
	PILE TIP ELEVATION									
	IN PLACE PILE LENGTH									
BENT NO. 6	PILE CUT-OFF ELEVATION									
	PILE TIP ELEVATION									
	IN PLACE PILE LENGTH									
ABUTMENT NO. 2	PILE CUT-OFF ELEVATION									
	PILE TIP ELEVATION									
	IN PLACE PILE LENGTH									

NOTE TO CONTRACTOR AND CONSTRUCTION OFFICE: THE BLANKS ON THIS SHEET ARE TO BE FILLED IN BY THE CONSTRUCTION OFFICE AND/OR FIELD ENGINEER GIVING AS BUILT CONDITIONS. AFTER COMPLETION, IT IS TO BE SENT TO THE DIVISION OF STRUCTURES TO BECOME PART OF FINAL BRIDGE DOCUMENTS.

UNOFFICIAL SET

NOT FOR BIDDING

STATE OF TENNESSEE
DEPARTMENT OF TRANSPORTATION

FINAL FOUNDATION DATA

STATE ROUTE 57 OVER
CYPRESS CREEK
BRIDGE I.D. NO. 55SR0570005
LOG MILE 8.25
STATION 24+29.45
MCNAIRY COUNTY
2014

GARVER

DESIGNED BY J.L. HALBROOK DATE OCT. 2013
DRAWN BY H.E. WILLIAMS DATE OCT. 2013
SUPERVISED BY B.W. STATON DATE OCT. 2013
CHECKED BY A. J. KHAIRI DATE OCT. 2013

TN D.O.T. ENGINEERING SUPERVISOR M. LAWSON

BR-115-97

JLHalbrook 8/6/2014 5:41:36 PM
WORKSPACE: TDOT Bridge
\\gltdc01\LITProjects\2010\00176\0 - TDOT - Bridge Repair over Cypress Creek\Drawings\BRG\BR-115-97.dgn

BILL OF STEEL

SUPERSTRUCTURE

BARS	LOCATION	SIZE	NO. REQ'D	BENDING DIMENSIONS A	B	C	D	LENGTH
A500	DIAPHRAGM	5	50					25'-7"
A501	DIAPHRAGM	5	50					16'-4"
✱ AX500	DIAPHRAGM	5	50	2'-4"	2'-2"			4'-6"
LS400	DIAPHRAGM	4	40	1'-2"	1'-6"			5'-4"
LS401	DIAPHRAGM	4	144	1'-3"	1'-8"			6'-7"
LS402	DIAPHRAGM	4	48	6"	2'-11"			7'-7"

SUPERSTRUCTURE (EPOXY-COATED)

BARS	LOCATION	SIZE	NO. REQ'D	BENDING DIMENSIONS A	B	C	D	LENGTH
A500E	SLAB	5	238					57'-0"
A501E	SLAB	5	122					38'-0"
A502E	SLAB	5	68					50'-0"
A503E	SLAB	5	12					42'-0"
A504E	SLAB	5	48					46'-0"
A505E	SLAB	5	1198					16'-4"
SERIES A506E	SLAB	5	2					293'-6"
			LENGTH VARIES 3'-8¾" TO 15'-10" IN INC OF 10⅜" (15 BARS)					
SERIES A507E	SLAB	5	2					264'-4"
			LENGTH VARIES 4'-11¾" TO 15'-4¼" IN INC OF 10⅜" (13 BARS)					
A508E	SLAB	5	1178					24'-4"
SERIES A509E	SLAB	5	2					667'-6"
			LENGTH VARIES 5'-0" TO 24'-0¼" IN INC OF 10⅜" (23 BARS)					
SERIES A510E	SLAB	5	2					667'-10"
			LENGTH VARIES 3'-11⅝" TO 23'-10¼" IN INC OF 10⅜" (24 BARS)					
A511E	SLAB	5	20					7'-0"
A700E	SLAB	7	110					45'-0"
A701E	SLAB	7	212					15'-0"
A800E	SLAB	8	106					20'-0"
✱ AX500E	SLAB	5	1218	2'-8"	2'-6"			5'-2"
✱ AX501E	SLAB	5	20	4'-6"	2'-6"			7'-0"
B570E	SLAB/PARAPET	5	1856	2'-8"				3'-4"
B600E	SLAB	6	1216	8'-0"				8'-8"

ABUTMENT NO. 1

BARS	LOCATION	SIZE	NO. REQ'D	BENDING DIMENSIONS A	B	C	D	LENGTH
A440	WINGWALL	4	26					2'-7"
A441	WINGWALL	4	8					14'-2"
A442	ROADWAY BRACKET	4	1					17'-1"
A443	ROADWAY BRACKET	4	1					26'-4"
A540	ABUTMENT BEAM	5	6					19'-8"
A541	ABUTMENT BEAM	5	6					28'-11"
A542	WINGBEAM	5	6					14'-8"
A543	WINGBEAM	5	6					15'-5"
A640	ENDWALL	6	6					18'-10"
A641	ENDWALL	6	6					28'-1"
A642	WINGWALL	6	26					2'-7"
A643	WINGWALL	6	8					14'-2"
A644	ENDWALL/ABUTMENT BEAM	6	7					4'-0"
A740	ABUTMENT BEAM	7	10					19'-8"
A741	ABUTMENT BEAM	7	10					28'-11"
A742	WINGBEAM	7	10					14'-8"
A743	WINGBEAM	7	10					15'-5"
✱ AX440	ROADWAY BRACKET	4	1	1'-8"	1'-6"			3'-2"
✱ AX540	ENDBEAM	5	6	2'-8"	2'-6"			5'-2"
✱ AX640	ENDWALL	6	6	2'-11"	2'-9"			5'-8"
✱ AX740	ABUTMENT BEAM	7	10	3'-5"	3'-3"			6'-8"
B640	ENDWALL	6	6	5'-0"				5'-8"
H440	RISER BLOCK	4	21	1'-1"	1'-6"			4'-1"
H441	RISER BLOCK	4	6	4'-8"	1'-6"			7'-8"
H540	ROADWAY BRACKET	5	42	2'-2"	6"			3'-2"
H541	ABUTMENT BEAM	5	8	3'-2"	2'-5"			11'-11"
H542	ABUTMENT BEAM	5	7	2'-8"	3'-2"			12'-5"
H640	ENDWALL/WINGWALL	6	70	1'-2"	4'-0"			9'-2"
LS540	ABUTMENT BEAM/WINGBEAM	5	66	2'-8"	3'-2"			12'-5"

ABUTMENT NO. 1 (EPOXY-COATED)

BARS	LOCATION	SIZE	NO. REQ'D	BENDING DIMENSIONS A	B	C	D	LENGTH
A640E	ENDWALL	6	2					18'-10"
A641E	ENDWALL	6	2					28'-1"
A642E	ENDWALL	6	51					2'-7"
✱ AX640E	ENDWALL	6	2	3'-8"	3'-6"			7'-2"
B570E	PARAPET	5	60	2'-1"				2'-8"
F640E	ENDWALL/P.A.B.E.	6	42	1'-1"	1'-3"	1'-1"		3'-11"
HP570E	PARAPET/WINGWALLS	5	16	4"	3'-10"	1'-1"	1'-3"	7'-11"
R640E	SLAB/ENDWALL	6	44	2'-0"	2'-8"			4'-8"

ABUTMENT NO. 2

BARS	LOCATION	SIZE	NO. REQ'D	BENDING DIMENSIONS A	B	C	D	LENGTH
A440	WINGWALL	4	26					2'-7"
A441	WINGWALL	4	8					14'-2"
A442	ROADWAY BRACKET	4	1					17'-1"
A443	ROADWAY BRACKET	4	1					26'-4"
A540	ABUTMENT BEAM	5	6					19'-8"
A541	ABUTMENT BEAM	5	6					28'-11"
A542	WINGBEAM	5	6					15'-5"
A543	WINGBEAM	5	6					14'-8"
A640	ENDWALL	6	6					18'-10"
A641	ENDWALL	6	6					28'-1"
A642	WINGWALL	6	26					2'-7"
A643	WINGWALL	6	8					14'-2"
A644	ENDWALL/ABUTMENT BEAM	6	8					4'-0"
A740	ABUTMENT BEAM	7	10					19'-8"
A741	ABUTMENT BEAM	7	10					28'-11"
A742	WINGBEAM	7	10					15'-5"
A743	WINGBEAM	7	10					14'-8"
✱ AX440	ROADWAY BRACKET	4	1	1'-8"	1'-6"			3'-2"
✱ AX540	ENDBEAM	5	6	2'-8"	2'-6"			5'-2"
✱ AX640	ENDWALL	6	6	2'-11"	2'-9"			5'-8"
✱ AX740	ABUTMENT BEAM	7	10	3'-5"	3'-3"			6'-8"
B640	ENDWALL	6	6	5'-0"				5'-8"
H440	RISER BLOCK	4	21	1'-1"	1'-6"			4'-1"
H441	RISER BLOCK	4	6	4'-8"	1'-6"			7'-8"
H540	ROADWAY BRACKET	5	42	2'-2"	6"			3'-2"
H541	ABUTMENT BEAM	5	8	3'-2"	2'-5"			11'-11"
H542	ABUTMENT BEAM	5	7	2'-8"	3'-2"			12'-5"
H640	ENDWALL/WINGWALL	6	69	1'-2"	4'-0"			9'-2"
LS540	ABUTMENT BEAM/WINGBEAM	5	66	2'-8"	3'-2"			12'-5"

ABUTMENT NO. 2 (EPOXY-COATED)

BARS	LOCATION	SIZE	NO. REQ'D	BENDING DIMENSIONS A	B	C	D	LENGTH
A640E	ENDWALL	6	2					18'-10"
A641E	ENDWALL	6	2					28'-1"
A642E	ENDWALL	6	51					2'-7"
✱ AX640E	ENDWALL	6	2	3'-8"	3'-6"			7'-2"
B570E	PARAPET	5	60	2'-1"				2'-8"
F640E	ENDWALL/P.A.B.E.	6	42	1'-1"	1'-3"	1'-1"		3'-11"
HP570E	PARAPET/WINGWALLS	5	16	4"	3'-10"	1'-1"	1'-3"	7'-11"
R640E	SLAB/ENDWALL	6	43	2'-0"	2'-8"			4'-8"

PROJECT NO.	YEAR	SHEET NO.
55008-3242-04	2014	

REVISIONS

NO.	DATE	BY	BRIEF DESCRIPTION

REINFORCING STEEL CODE		
TYPE	SIZE	SERIES
A	5	06

NOTES:

1. DIMENSIONS SHOWN ON THIS SHEET ARE OUTSIDE TO OUTSIDE OF BAR. STANDARD C.R.S.I. HOOK DETAILS SHALL APPLY, EXCEPT AS NOTED.
2. THE SUFFIX E FOR BARS SO MARKED DENOTES EPOXY COATED REINFORCEMENT.

✱ BAR LENGTH INCLUDES 1 (ONE) THREADED MECAHNICAL COUPLER AND 2 (TWO) INDIVIDUAL BAR SEGMENTS. ONE END OF EACH BAR SEGMENT SHALL BE THREADED TO MATCH THE MECHANICAL COUPLER. SEE GENEARL NOTES FOR ADDITIONAL MECHANICAL BAR SPLICE REQUIREMENTS.

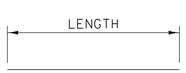

BARS A

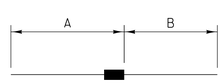

BARS AX

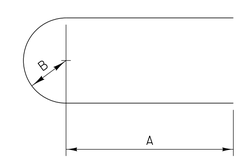

BARS XA

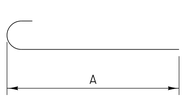

BARS B

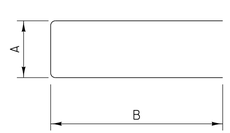

BARS H

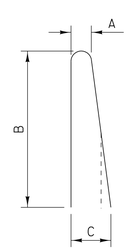

BARS HP
(BEND IN FIELD)

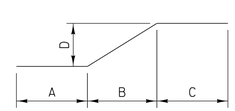

BARS F

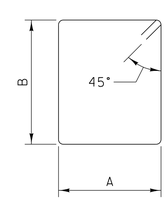

BARS LS

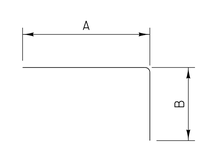

BARS R

GARVER

DESIGNED BY J.L. HALBROOK DATE OCT. 2013
DRAWN BY H.E. WILLIAMS DATE OCT. 2013
SUPERVISED BY B.W. STATON DATE OCT. 2013
CHECKED BY A.J KHAIRI DATE OCT. 2013

TN D.O.T. ENGINEERING SUPERVISOR M. LAWSON

UNOFFICIAL SET

NOT FOR BIDDING

STATE OF TENNESSEE
DEPARTMENT OF TRANSPORTATION

BILL OF STEEL

STATE ROUTE 57 OVER
CYPRESS CREEK
BRIDGE I.D. NO. 55SR0570005
LOG MILE 8.25
STATION 24+29.45
MCNAIRY COUNTY
2014

BR-115-98

JLHalbrook 8/6/2014 5:11:36 PM
WORKSPACE: TDOT Bridge
\\glitdc01\LITProjects\2010\00171610 - TDOT - Bridge Repair over Cypress Creek\Drawings\BRG\BR-115-98.dgn

BILL OF STEEL

BENT NO. 1

BARS	LOCATION	SIZE	NO. REQ'D	BENDING DIMENSIONS A	B	C	D	LENGTH
A450	CAP	4	10					17'-3"
A451	CAP	4	10					28'-0"
A550	CAP	5	12					5'-8"
A650	CAP	6	2					17'-3"
A651	CAP	6	2					18'-0"
A652	CAP	6	2					18'-2"
A653	CAP	6	2					28'-0"
A654	CAP	6	2					28'-8"
A655	CAP	6	2					28'-10"
A950	CAP	9	2					17'-3"
A951	CAP	9	2					17'-11"
A952	CAP	9	2					28'-0"
A953	CAP	9	2					28'-7"
* AX450	CAP	4	10	1'-8"	1'-6"			3'-2"
* AX650	CAP	6	6	3'-6"	3'-4"			6'-10"
* AX950	CAP	9	4	4'-3"	4'-1"			8'-4"
H450	RISER BLOCK	4	24	2'-6"	1'-6"			5'-6"
H451	RISER BLOCK	4	12	5'-5"	1'-6"			8'-5"
H550	CAP	5	8	2'-8"	3'-2"			9'-0"
LS550	CAP	5	47	2'-8"	3'-2"			12'-5"
LS551	CAP	5	4	1'-8"	3'-2"			10'-5"
XA550	CAP	5	14	2'-2"	1'-4"			8'-6"

BENT NO. 2

BARS	LOCATION	SIZE	NO. REQ'D	BENDING DIMENSIONS A	B	C	D	LENGTH
A450	CAP	4	10					17'-3"
A451	CAP	4	10					28'-0"
A550	CAP	5	12					5'-8"
A650	CAP	6	2					17'-3"
A651	CAP	6	2					18'-0"
A652	CAP	6	2					18'-2"
A653	CAP	6	2					28'-0"
A654	CAP	6	2					28'-8"
A655	CAP	6	2					28'-10"
A950	CAP	9	2					17'-3"
A951	CAP	9	2					17'-11"
A952	CAP	9	2					28'-0"
A953	CAP	9	2					28'-7"
* AX450	CAP	4	10	1'-8"	1'-6"			3'-2"
* AX650	CAP	6	6	3'-6"	3'-4"			6'-10"
* AX950	CAP	9	4	4'-3"	4'-1"			8'-4"
H450	RISER BLOCK	4	24	2'-6"	1'-6"			5'-6"
H451	RISER BLOCK	4	12	5'-5"	1'-6"			8'-5"
H550	CAP	5	8	2'-8"	3'-2"			9'-0"
LS550	CAP	5	47	2'-8"	3'-2"			12'-5"
LS551	CAP	5	4	1'-8"	3'-2"			10'-5"
XA550	CAP	5	14	2'-2"	1'-4"			8'-6"

BENT NO. 3

BARS	LOCATION	SIZE	NO. REQ'D	BENDING DIMENSIONS A	B	C	D	LENGTH
A450	CAP	4	1					21'-1"
A451	CAP	4	1					30'-1"
A452	CAP	4	11					19'-10"
A453	CAP	4	11					28'-10"
A550	CAP	5	10					4'-8"
A551	CAP	5	10					5'-4"
A650	CAP/RISER STEP	6	3					19'-10"
A651	CAP/RISER STEP	6	3					20'-10"
A652	CAP/RISER STEP	6	3					21'-1"
A653	CAP/RISER STEP	6	3					28'-10"
A654	CAP/RISER STEP	6	3					29'-10"
A655	CAP/RISER STEP	6	3					30'-1"
A1050	CAP	10	2					19'-10"
A1051	CAP	10	2					20'-5"
A1052	CAP	10	2					28'-10"
A1053	CAP	10	2					29'-5"
* AX450	CAP/RISER STEP	4	12	1'-8"	1'-6"			3'-2"
* AX650	CAP/RISER STEP	6	9	3'-6"	3'-4"			6'-10"
* AX1050	CAP	10	4	5'-5"	5'-3"			10'-8"
H450	RISER BLOCK	4	48	1'-7"	1'-6"			4'-7"
H451	RISER BLOCK	4	9	4'-10"	1'-6"			7'-10"
H452	RISER BLOCK	4	9	5'-11"	1'-6"			8'-11"
H550	RISER STEP	5	59	1'-8"	2'-3"			6'-2"
H551	CAP	5	14	3'-8"	3'-8"			11'-0"
H552	RISER STEP	5	4	11½"	2'-3"			5'-5½"
LS550	CAP	5	45	3'-8"	3'-8"			15'-5"
LS551	CAP	5	4	2'-3"	3'-8"			12'-7"
XA550	CAP	5	14	2'-2"	1'-10"			10'-0"

BENT NO. 4

BARS	LOCATION	SIZE	NO. REQ'D	BENDING DIMENSIONS A	B	C	D	LENGTH
A450	CAP	4	1					21'-1"
A451	CAP	4	1					30'-1"
A452	CAP	4	11					19'-10"
A453	CAP	4	11					28'-10"
A550	CAP	5	10					4'-8"
A551	CAP	5	10					5'-4"
A650	CAP/RISER STEP	6	3					19'-10"
A651	CAP/RISER STEP	6	3					20'-10"
A652	CAP/RISER STEP	6	3					21'-1"
A653	CAP/RISER STEP	6	3					28'-10"
A654	CAP/RISER STEP	6	3					29'-10"
A655	CAP/RISER STEP	6	3					30'-1"
A1050	CAP	10	2					19'-10"
A1051	CAP	10	2					20'-5"
A1052	CAP	10	2					28'-10"
A1053	CAP	10	2					29'-5"
* AX450	CAP/RISER STEP	4	12	1'-8"	1'-6"			3'-2"
* AX650	CAP/RISER STEP	6	9	3'-6"	3'-4"			6'-10"
* AX1050	CAP	10	4	5'-5"	5'-3"			10'-8"
H450	RISER BLOCK	4	48	1'-7"	1'-6"			4'-7"
H451	RISER BLOCK	4	9	4'-10"	1'-6"			7'-10"
H452	RISER BLOCK	4	9	5'-11"	1'-6"			8'-11"
H550	RISER STEP	5	59	1'-8"	2'-3"			6'-2"
H551	CAP	5	14	3'-8"	3'-8"			11'-0"
H552	RISER STEP	5	4	11½"	2'-3"			5'-5½"
LS550	CAP	5	45	3'-8"	3'-8"			15'-5"
LS551	CAP	5	4	2'-3"	3'-8"			12'-7"
XA550	CAP	5	14	2'-2"	1'-10"			10'-0"

BENT NO. 5

BARS	LOCATION	SIZE	NO. REQ'D	BENDING DIMENSIONS A	B	C	D	LENGTH
A450	CAP	4	10					17'-3"
A451	CAP	4	10					28'-0"
A550	CAP	5	12					5'-8"
A650	CAP	6	2					17'-3"
A651	CAP	6	2					18'-0"
A652	CAP	6	2					18'-2"
A653	CAP	6	2					28'-0"
A654	CAP	6	2					28'-8"
A655	CAP	6	2					28'-10"
A950	CAP	9	2					17'-3"
A951	CAP	9	2					17'-11"
A952	CAP	9	2					28'-0"
A953	CAP	9	2					28'-7"
* AX450	CAP	4	10	1'-8"	1'-6"			3'-2"
* AX650	CAP	6	6	3'-6"	3'-4"			6'-10"
* AX950	CAP	9	4	4'-3"	4'-1"			8'-4"
H450	RISER BLOCK	4	24	2'-6"	1'-6"			5'-6"
H451	RISER BLOCK	4	12	5'-5"	1'-6"			8'-5"
H550	CAP	5	8	2'-8"	3'-2"			9'-0"
LS550	CAP	5	47	2'-8"	3'-2"			12'-5"
LS551	CAP	5	4	1'-8"	3'-2"			10'-5"
XA550	CAP	5	14	2'-2"	1'-4"			8'-6"

BENT NO. 6

BARS	LOCATION	SIZE	NO. REQ'D	BENDING DIMENSIONS A	B	C	D	LENGTH
A450	CAP	4	10					17'-3"
A451	CAP	4	10					28'-0"
A550	CAP	5	12					5'-8"
A650	CAP	6	2					17'-3"
A651	CAP	6	2					18'-0"
A652	CAP	6	2					18'-2"
A653	CAP	6	2					28'-0"
A654	CAP	6	2					28'-8"
A655	CAP	6	2					28'-10"
A950	CAP	9	2					17'-3"
A951	CAP	9	2					17'-11"
A952	CAP	9	2					28'-0"
A953	CAP	9	2					28'-7"
* AX450	CAP	4	10	1'-8"	1'-6"			3'-2"
* AX650	CAP	6	6	3'-6"	3'-4"			6'-10"
* AX950	CAP	9	4	4'-3"	4'-1"			8'-4"
H450	RISER BLOCK	4	24	2'-6"	1'-6"			5'-6"
H451	RISER BLOCK	4	12	5'-5"	1'-6"			8'-5"
H550	CAP	5	8	2'-8"	3'-2"			9'-0"
LS550	CAP	5	47	2'-8"	3'-2"			12'-5"
LS551	CAP	5	4	1'-8"	3'-2"			10'-5"
XA550	CAP	5	14	2'-2"	1'-4"			8'-6"

PROJECT NO.	YEAR	SHEET NO.
55008-3242-04	2014	

REVISIONS

NO.	DATE	BY	BRIEF DESCRIPTION

REINFORCING STEEL CODE		
TYPE	SIZE	SERIES
A	5	06

NOTES:

1. DIMENSIONS SHOWN ON THIS SHEET ARE OUTSIDE TO OUTSIDE OF BAR. STANDARD C.R.S.I. HOOK DETAILS SHALL APPLY, EXCEPT AS NOTED.
2. THE SUFFIX E FOR BARS SO MARKED DENOTES EPOXY COATED REINFORCEMENT.
3. FOR BAR SHAPES, SEE DWG. NO. BR-115-98.

* BAR LENGTH INCLUDES 1 (ONE) THREADED MECAHNICAL COUPLER AND 2 (TWO) INDIVIDUAL BAR SEGMENTS. ONE END OF EACH BAR SEGMENT SHALL BE THREADED TO MATCH THE MECHANICAL COUPLER. SEE GENEARL NOTES FOR ADDITIONAL MECHANICAL BAR SPLICE REQUIREMENTS.

GARVER

DESIGNED BY J.L. HALBROOK DATE OCT. 2013
DRAWN BY H.E. WILLIAMS DATE OCT. 2013
SUPERVISED BY B.W. STATON DATE OCT. 2013
CHECKED BY A.J. KHAIRI DATE OCT. 2013

TN D.O.T. ENGINEERING SUPERVISOR M. LAWSON

UNOFFICIAL SET

NOT FOR BIDDING

STATE OF TENNESSEE
DEPARTMENT OF TRANSPORTATION

BILL OF STEEL

STATE ROUTE 57 OVER
CYPRESS CREEK
BRIDGE I.D. NO. 55SR0570005
LOG MILE 8.25
STATION 24+29.45
MCNAIRY COUNTY
2014

BR-115-99

JLHalbrook 8/6/2014 5:41:37 PM
WORKSPACE: TDOT Bridge
\\gltdc01\LTProjects\2010\0007610 - TDOT - Bridge Repair over Cypress Creek\Drawings\BRG\BR-115-99.dgn