TYPE	YEAR	PROJECT NO.	SHEET NO.
CONST.	2014	19010-4164-04	2E

TENNESSEE D.O.T.
DESIGN DIVISION
FILE NO.

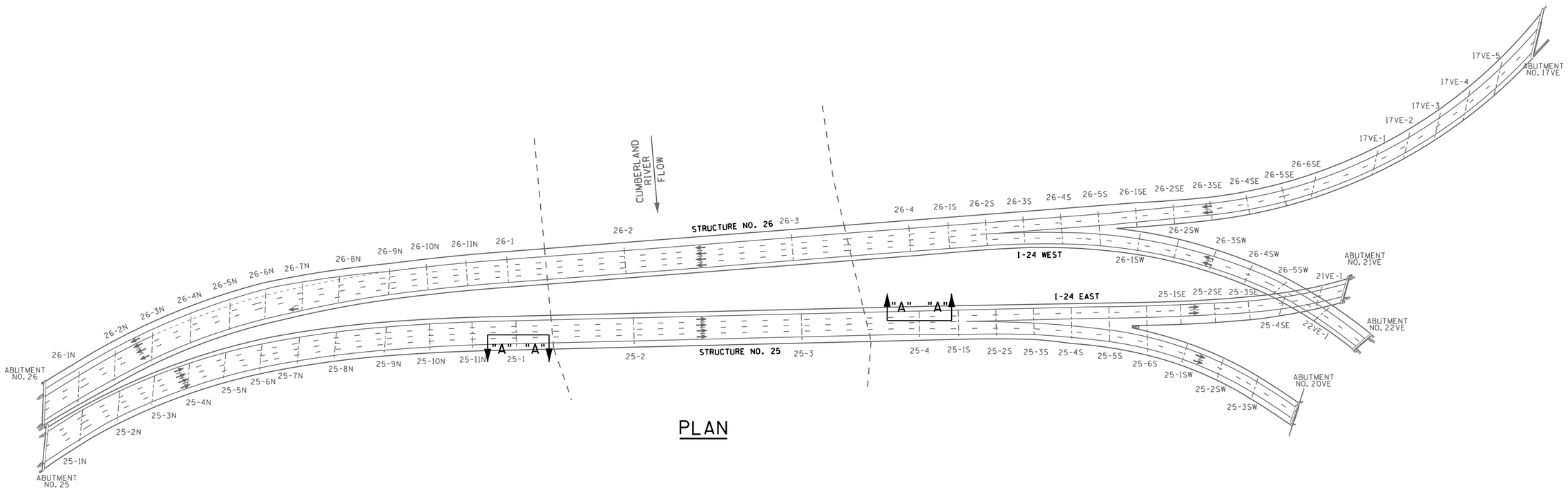

PLAN

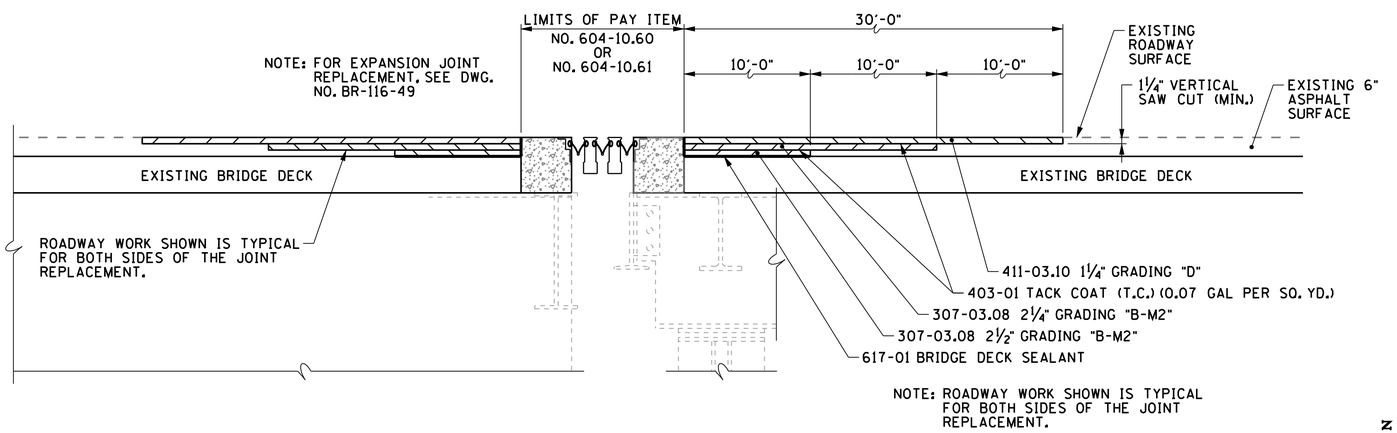

NOTE: ROADWAY WORK SHOWN IS TYPICAL FOR BOTH SIDES OF THE JOINT REPLACEMENT.

SECTION "A-A"

(EXPANSION JOINT REPLACEMENT AND PAVEMENT TRANSITION)
N.T.S.

N

0 100 200 400
SCALE
(FT)

BRIDGE NO. 19-I24-15.42LT
BRIDGE NO. 19-I24-15.42RT
INTERSTATE 24 OVER
CUMBERLAND RIVER
DAVIDSON COUNTY
2014

JAMES R. GILLESPIE JR.
REGISTERED ENGINEER
No. 102690
STATE OF TENNESSEE
03/11/2014

STATE OF TENNESSEE
DEPARTMENT OF TRANSPORTATION

ROADWAY DETAILS