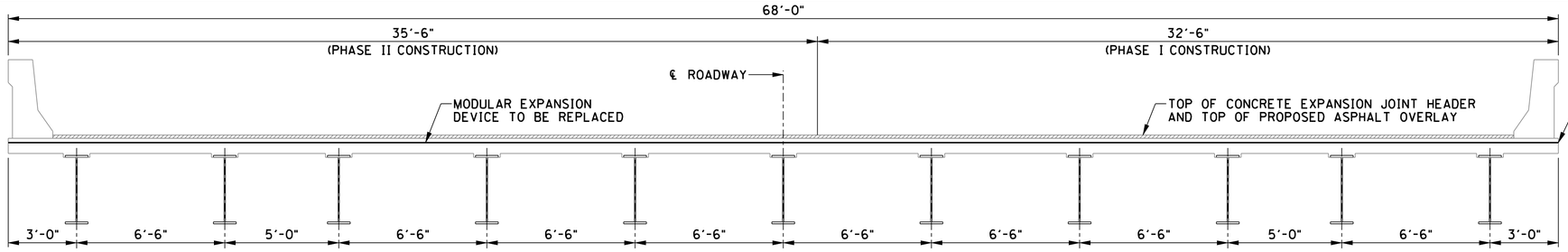

NOTE: MODULAR EXPANSION JOINT RETAINERS SHALL EXTEND TWO INCHES (2") BEYOND THE EDGE OF THE CONCRETE DECK. SEE STD-1-2 FOR DETAILS.

PHASED MODULAR EXPANSION JOINT REPLACEMENT

(PIER NOS. 25-1 AND 25-4)
(NOT TO SCALE)

CONST. NO.		
PROJECT NO.	YEAR	SHEET NO.
19010-4164-04	2014	

REVISIONS

NO.	DATE	BY	BRIEF DESCRIPTION
2	08-15-14	DWT	REVISED AND ADDED EXPANSION JOINT DETAILS, REMOVED METAL SHIM PLATE NOTE

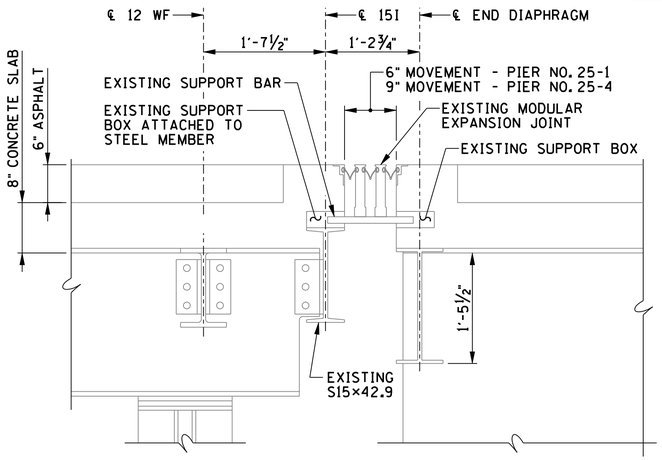

EXISTING CONDITIONS - EXPANSION JOINT AT PIER NO. 25-4

(PIER NO. 25-1 SIMILAR)
(NOT TO SCALE)
2

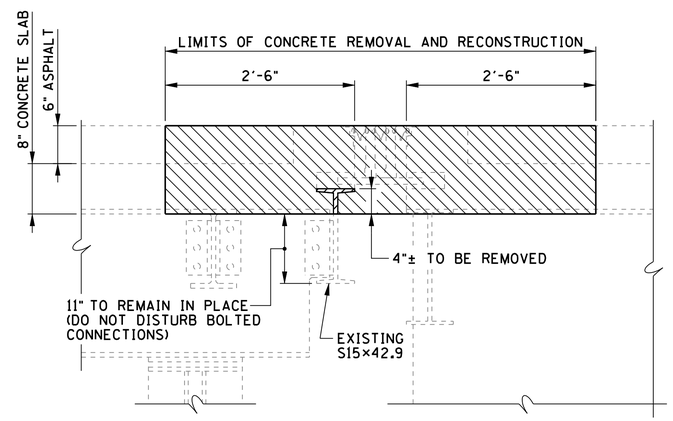

CONCRETE REMOVAL AND RECONSTRUCTION DETAIL AT PIER NO. 25-4

(PIER NO. 25-1 SIMILAR)
(NOT TO SCALE)
2

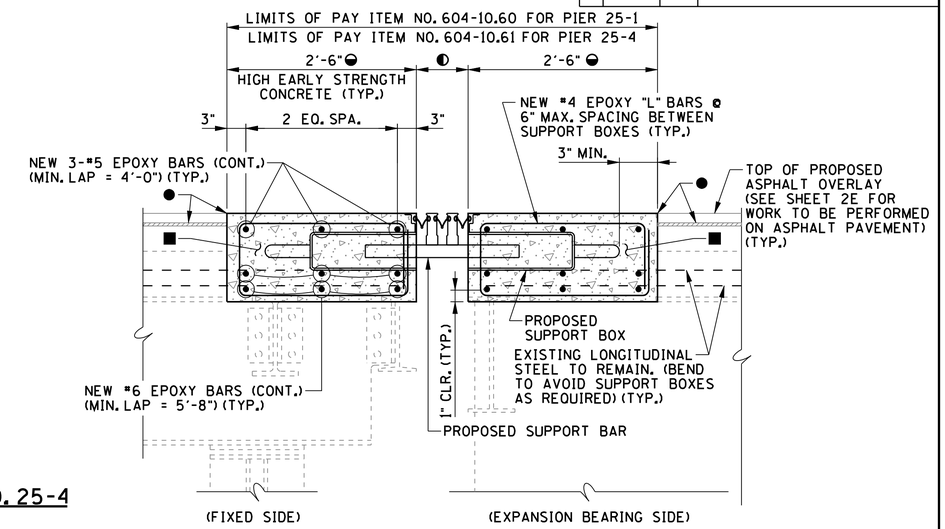

EXPANSION JOINT REPLACEMENT AT PIER NO. 25-4

(PIER NO. 25-1 SIMILAR)
(NOT TO SCALE)
2

2

NOTE:
WITHIN LIMITS SHOWN: REMOVE EXISTING EXPANSION JOINT. REMOVE ALL CONCRETE AND TRANSVERSE REINFORCEMENT. REMOVE ALL STAY IN PLACE METAL DECKING. REMOVE TOP 4"± OF S15×42.9. ALL PROPOSED CONCRETE FORMWORK SHALL BE REMOVABLE. STAY IN PLACE FORMWORK WILL NOT BE ALLOWED.

● DENOTES: NEW BRIDGE DECK SEALANT MEMBRANE REQUIRED WITH MASTIC AS RECOMMENDED BY MANUFACTURER OF MEMBRANE. BRIDGE DECK SEALANT MEMBRANE SHALL ALSO BE PLACED ON PARAPETS UP TO ELEVATION OF TOP OF PROPOSED ASPHALT OVERLAY. SEE STANDARD SPECIFICATIONS, ARTICLE 906.04. PAY ITEM NO. 617-01. SEE DETAIL THIS SHEET.

◐ DENOTES: EXPANSION DEVICE TO BE REMOVED AND REPLACED WITH MODULAR JOINT (6" MOVEMENT) AT PIER NO. 25-1 AND MODULAR JOINT (9" MOVEMENT) AT PIER NO. 25-4.

◒ DENOTES: LIMITS OF EXISTING CONCRETE REMOVAL AND RECONSTRUCTION SHALL MATCH LIMITS OF EXISTING CONCRETE EXPANSION JOINT HEADER.

■ DENOTES: EXISTING LONGITUDINAL REINFORCING STEEL TO REMAIN AND BE BLAST CLEANED PRIOR TO POURING NEW HIGH EARLY STRENGTH CONCRETE. PROPOSED TRANSVERSE STEEL SHALL BE DETAILED IN SHOP DRAWINGS.

NOTE: EXPANSION GAP WILL CHANGE AT OTHER TEMPERATURES AND THE CONTRACTOR SHALL COMPENSATE FOR JOINT MATERIAL IN ACCORDANCE WITH THE MANUFACTURER'S RECOMMENDATIONS. NO INCREASE IN THE UNIT BID PRICE SHALL BE ALLOWED.

NOTE: JOINT REPLACEMENT DETAIL SHOWN ON THIS SHEET IS FOR GENERAL INFORMATION ONLY. FOR DETAILS AND NOTES, SEE APPROVED SHOP DRAWINGS AND SECTION 623.02 OF STANDARD SPECIFICATIONS. THE ANCHORAGE AND SUPPORT SYSTEM SHALL BE IN ACCORDANCE WITH SPECIAL PROVISION NO. 604M.

NOTE: JOINT REPLACEMENT SHALL BE CONSTRUCTED IN PHASES AS SHOWN ABOVE. THE STEEL PORTIONS OF THE DEVICE SHALL BE FABRICATED IN SECTIONS. THE SECTIONS ARE TO BE CONNECTED WITH A FULL PENETRATION BUTT WELD. THE SEAL SHALL BE ONE PIECE FOR FULL LENGTH OF JOINT INCLUDING PARAPET FACE PROJECTIONS.

NOTE: JOINT OPENING SHALL BE SET ACCORDING TO TEMPERATURE CHART SHOWN ON APPROVED JOINT SHOP DRAWINGS.

NOTE: PROVISIONS SHALL BE MADE BY THE CONTRACTOR TO ENSURE THAT THE VERTICAL ALIGNMENT OF THE NEW STEEL EXTRUSION AND CONCRETE SLAB END SURFACES CONFORM TO THE EXISTING ROADWAY PROFILE.

NOTE: THE COST OF REMOVING EXISTING JOINTS AND PORTIONS OF THE EXISTING CONCRETE WITHIN THE LIMITS SHOWN, BLAST CLEANING EXISTING REINFORCING STEEL, HIGH EARLY STRENGTH CONCRETE, FORMING, REINFORCING STEEL, AND ALL MISCELLANEOUS MATERIAL NECESSARY FOR CONSTRUCTING THE NEW SECTIONS AS SHOWN SHALL BE INCLUDED IN THE PRICE BID FOR ITEM NO. 604-10.60, EXPANSION JOINT REPAIRS (MODULAR TYPE) (PIER NO. 25-1, 6" MOVEMENT) AND ITEM NO. 604-10.61, EXPANSION JOINT REPAIRS (MODULAR TYPE) (PIER NO. 25-4, 9" MOVEMENT).

NOTE: CONTRACTOR SHALL VERIFY ALL EXISTING CONDITIONS IN THE FIELD INCLUDING BUT NOT LIMITED TO LENGTH OF JOINT FOR EACH PHASE OF CONSTRUCTION, SKEW, AND ALL EXISTING BRIDGE COMPONENTS SUCH AS BEAM AND DIAPHRAGM LOCATIONS AND ANY OTHER DIMENSION THAT WILL AFFECT THE FABRICATION AND PHASED CONSTRUCTION OF THE NEW JOINTS. JOINT SECTIONS SHALL BE PLACED WITHIN TWO WEEKENDS (ONE WEEKEND PER PHASE) AND THE BRIDGE WILL BE PUT BACK IN SERVICE, THEREFORE EXPANSION JOINT SECTIONS MUST BE FABRICATED TO BE CONSTRUCTED IN ACCORDANCE WITH CONSTRUCTION PHASING AND SEQUENCING PLANS.

NOTE: CONTRACTOR SHALL BE RESPONSIBLE FOR SUPPORTING THE PORTIONS OF THE SLAB THAT ARE NOT REMOVED.

NOTE: BEFORE FABRICATION BEGINS, CONTRACTOR SHALL SUBMIT SHOP DRAWINGS SHOWING DETAILS OF PROPOSED MODULAR EXPANSION JOINT, INCLUDING ANCHORAGE AND SUPPORT SYSTEM AND NEW REINFORCING STEEL REQUIRED. SHOP DRAWINGS SHALL ALSO SHOW SPACING OF EXISTING BRACKETS AND STIFFENERS.

NOTE: CONTRACTOR SHALL CONSTRUCT NEW STEEL SLIDER PLATE ASSEMBLIES AT THE NEW MODULAR JOINTS IN ACCORDANCE WITH STANDARD DRAWING STD-1-2, DATED 1993. THE COST IS TO BE INCLUDED IN PAY ITEM NO. 604-10.60 AND 604-10.61. CONTRACTOR SHALL SUBMIT SHOP DRAWINGS PRIOR TO FABRICATION.

NOTE: JOINT MEMBERS AND SUPPORT BOXES SHALL BE GALVANIZED AFTER FABRICATION IN ACCORDANCE WITH ASTM A123.

NOTE: ALL CONCRETE POURS SHALL BE WELL CONSOLIDATED BEHIND AND AROUND THE EXPANSION JOINT STEEL RETAINERS.

CONCRETE STRENGTH AND CURE TIME NOTES

NOTE: THE NEW CONCRETE FOR THE EXPANSION JOINT HEADERS AND PARAPETS SHALL OBTAIN A COMPRESSIVE STRENGTH OF 3000 PSI IN EIGHTEEN (18) HOURS. NO LOADS SHALL BE PERMITTED PRIOR TO CONCRETE REACHING THIS STRENGTH.

NOTE: FOR AREAS REQUIRING EIGHTEEN (18) HOUR CONCRETE, THE FOLLOWING SHALL APPLY:
HIGH EARLY STRENGTH CONCRETE: SHALL BE HIGH EARLY STRENGTH CONCRETE (UNLESS OTHERWISE NOTED) WITH A COMPRESSIVE STRENGTH OF 3000 PSI AT EIGHTEEN (18) HOURS. THE CONTRACTOR SHALL PROVIDE PROOF PRIOR TO BEGINNING WORK THAT THE PROPOSED CONCRETE MIX SHALL OBTAIN REQUIRED PROPERTIES. PROOF SHALL BE PROVIDED BY AN INDEPENDENT TESTING COMPANY AND SUBMITTED TO THE MATERIALS AND TEST DIVISION OF THE TENNESSEE DEPARTMENT OF TRANSPORTATION FOR APPROVAL. NO LOAD SHALL BE PERMITTED ON ANY OF THE REPAIR AREAS UNTIL TEST SPECIMENS ATTAIN A COMPRESSIVE STRENGTH OF 3000 PSI MINIMUM AND THE CONCRETE HAS BEEN IN PLACE A MINIMUM OF EIGHTEEN (18) HOURS.

DAVID W. THOMPSON
REGISTERED ENGINEER
DEPARTMENT OF AGRICULTURE
COMMERCE
NO. 19232
STATE OF TENNESSEE
08/15/2014

STATE OF TENNESSEE
DEPARTMENT OF TRANSPORTATION

EXPANSION JOINT REPLACEMENT

BRIDGE NO. 19-I24-15.42LT
BRIDGE NO. 19-I24-15.42RT
INTERSTATE 24 OVER
CUMBERLAND RIVER
DAVIDSON COUNTY
2014

BR-116-49

DESIGNED BY	DAVID THOMPSON	DATE	
DRAWN BY	ANGELA MOORE	DATE	
SUPERVISED BY	DARRELL JAMES	DATE	
CHECKED BY	JAMIE GILLESPIE	DATE	

JAMES & ASSOCIATES, INC.