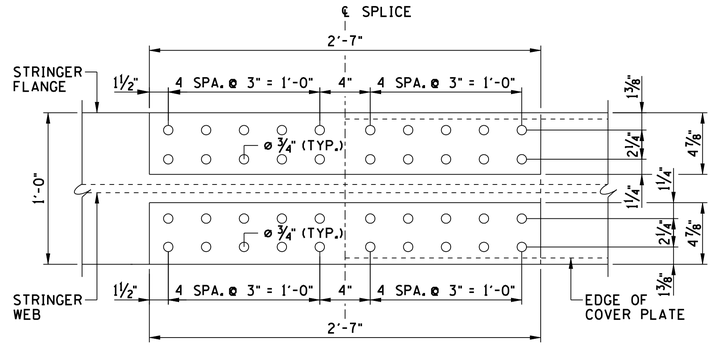

PLAN OF BOTTOM FLANGE SPLICE PLATES TO BE REMOVED

(NOT TO SCALE)

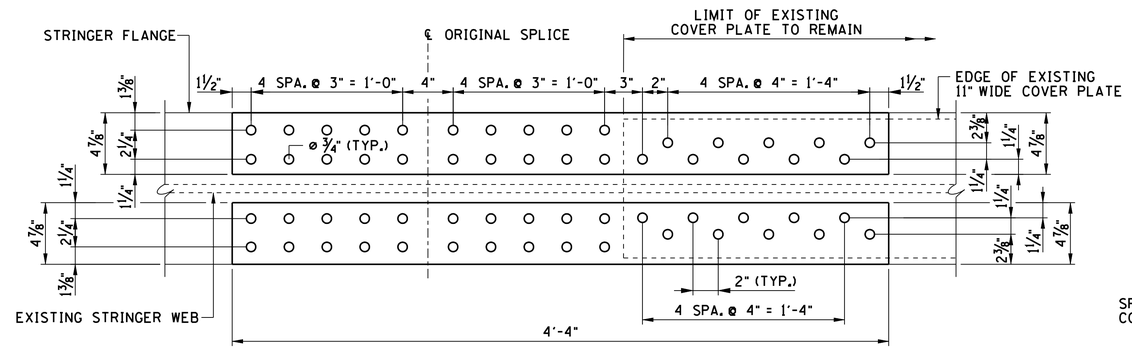

PLAN OF PROPOSED BOTTOM FLANGE SPLICE PLATE

(TOP SIDE OF BOTTOM FLANGE)
(NOT TO SCALE)

CONST. NO.		
PROJECT NO.	YEAR	SHEET NO.
19010-4164-04	2014	

REVISIONS

NO.	DATE	BY	BRIEF DESCRIPTION

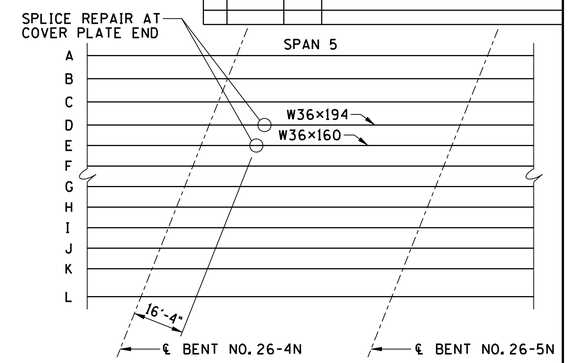

SPLICE REPAIR LOCATION - PLAN VIEW

(NOT TO SCALE)

NOTE: TWO EXISTING SPLICES ARE TO BE REPAIRED AT END OF ORIGINAL COVER PLATE ON STRINGERS "D" AND "E" IN SPAN 5 BETWEEN BENTS 26-4N AND 26-5N.

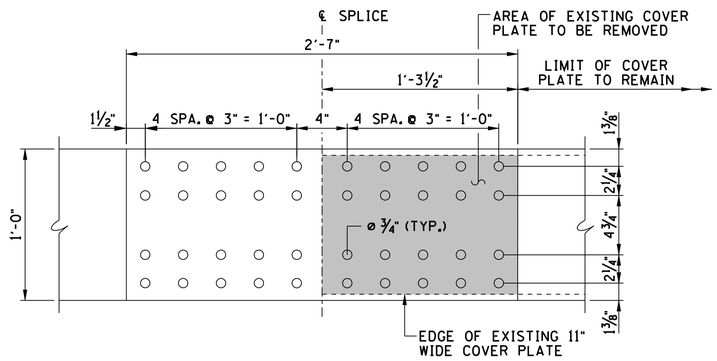

PLAN OF BOTTOM FLANGE SPLICE PLATE AND PORTION OF COVER PLATE TO BE REMOVED

(NOT TO SCALE)

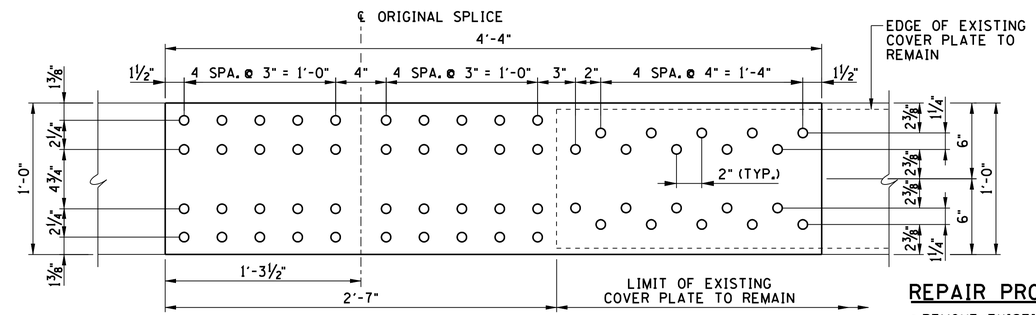

PLAN OF PROPOSED BOTTOM FLANGE SPLICE PLATE

(NOT TO SCALE)

REPAIR PROCEDURE:

- REMOVE EXISTING NUTS AND BOLTS AND DISCARD.
- REMOVE EXISTING PLATES (2 TOP PLATES AND 1 BOTTOM PLATE).
- REMOVE 1'-3½" LENGTH OF PLATE FROM THE END OF THE EXISTING COVER PLATE.
- CONSTRUCT NEW SPLICES IN ACCORDANCE WITH NOTES AND DETAILS ON THIS SHEET. NEW BOLT HOLES FOR NEW SPLICE PLATES SHALL MATCH EXISTING BOLT HOLE LOCATIONS IN BEAM FLANGE. FIELD DRILLING WILL BE REQUIRED.
- ALL BOLTS AND NUTS SHALL BE NEW ⅝" DIAMETER ASTM A325. CONTACT SURFACES SHALL BE CLEANED PRIOR TO ATTACHMENT.
- ALL NEW STRUCTURAL STEEL, BOLTS, NUTS AND EXISTING STEEL MEMBERS DISTURBED DURING THE REPAIR PROCESS SHALL BE PAINTED TO MATCH THE EXISTING (ITEM NO. 603-02.20). SEE NOTES ON BR-116-48.

NOTE: ALL WORK SHOWN ON THIS SHEET SHALL BE PAID FOR IN ITEM NO. 602-10.01.

NOTE: CONTRACTOR SHALL FIELD VERIFY SIZE AND ORIENTATION OF PROPOSED PLATES PRIOR TO FABRICATION.

NOTE: STRUCTURAL STEEL SHALL BE IN ACCORDANCE WITH AASHTO M270 GRADE 36.

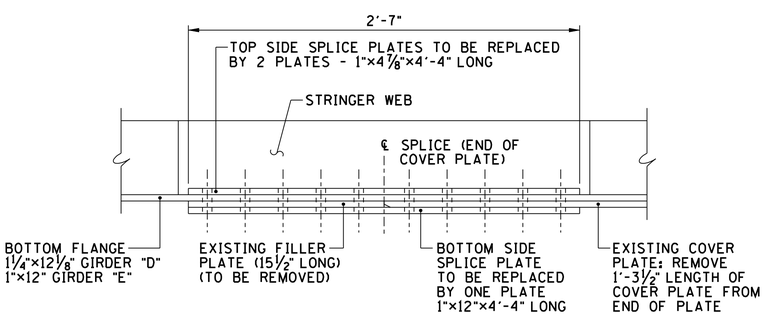

ELEVATION OF BOTTOM FLANGE SPLICE TO BE MODIFIED

(NOT TO SCALE)

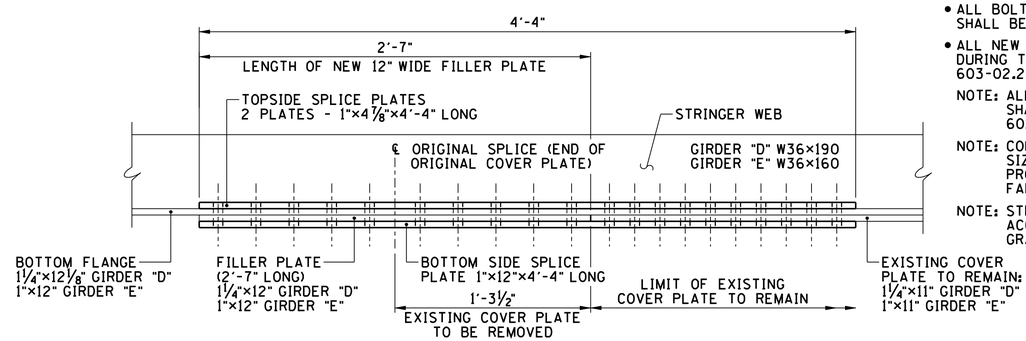

ELEVATION OF PROPOSED BOTTOM FLANGE SPLICE

(NOT TO SCALE)

NOTE: CONTRACTOR SHALL FIELD VERIFY THAT THERE WILL BE A MINIMUM OF 1" OF MATERIAL FROM THE EDGE OF EXISTING FLANGE AND FROM THE EDGE OF EXISTING AND PROPOSED COVER PLATES TO THE EDGE OF THE PROPOSED BOLT HOLE.

NOTE: PROPOSED FILLER PLATE SHALL MATCH THICKNESS OF EXISTING COVER PLATE TO REMAIN.

03/11/2014

STATE OF TENNESSEE
DEPARTMENT OF TRANSPORTATION

SPLICE REPAIR DETAILS

BRIDGE NO. 19-I24-15.42LT
(STRUCTURE NO. 26)
INTERSTATE 24 OVER
CUMBERLAND RIVER
DAVIDSON COUNTY
2014

DESIGNED BY	D. THOMPSON/L. HORN	DATE	
DRAWN BY	ANGELA MOORE	DATE	
SUPERVISED BY	DARRELL JAMES	DATE	
CHECKED BY	JAMIE GILLESPIE	DATE	

JAMES & ASSOCIATES, INC.

BR-116-50