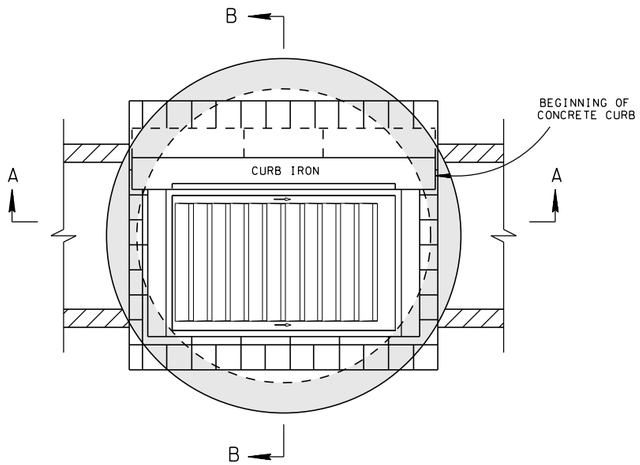

PLAN VIEW

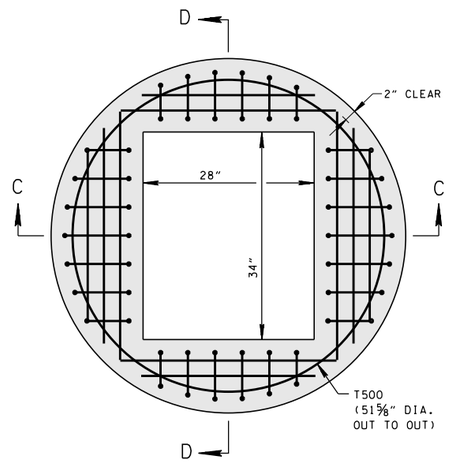

LID REINFORCING

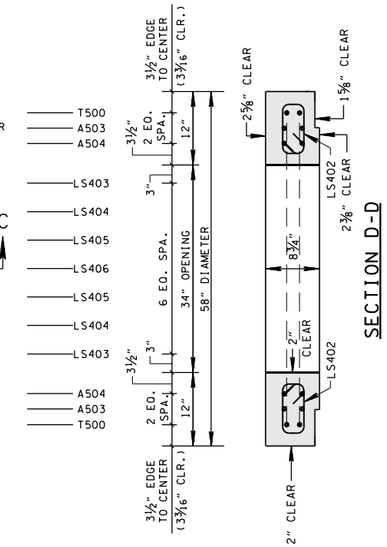

SECTION D-D

CATCH BASIN MAXIMUM DEPTH NOTE
MAXIMUM DEPTH FOR THIS STRUCTURE IS 20.00'.

CATCH BASIN DIMENSIONS				FOR DESIGN USE ONLY CATCH BASIN MINIMUM DESIGN DEPTH (FEET)
INSIDE DIAMETER (D) OF PIPE (INCHES)	PIPE WALL THICKNESS (INCHES)	DIAMETER OF CUT-OUT HOLES (INCHES)	PRECAST SECTION MIN. HEIGHTS (INCHES)	
18	2½	25	49	3.71
24	3	32	56	4.25

(1) CUT-OUT HOLES BASED ON REINFORCED CONCRETE PIPE WITH WALL TYPE "B".

(2) ALL FLEXIBLE PIPE MATERIALS REQUIRE GASKET. SEE STANDARD DRAWING D-PB-2.

(3) CUT-OUT HOLES FOR PRECAST STRUCTURES TO BE FORMED IN ORDER TO OBTAIN A SMOOTH EDGED HOLE. SCORED OR ETCHED HOLES WITH REINFORCING STEEL LEFT UNCUT WILL NOT BE PERMITTED.

- REV. 12-18-95: MODIFIED DRAWING NO. D-CB-25RA TO ACCEPT 4" MOUNTABLE CURB BACK.
- REV. 2-14-96: CHANGED SHEET NAME.
- REV. 12-18-96: REMOVED 0.5" PREMOLDED FIBER EXPANSION JOINT FROM SECTION "B-B". REMOVED OLD GENERAL NOTE (F) CHANGED LABEL OF LAST FOUR GENERAL NOTES.
- REV. 4-15-97: CHANGED CATCH BASIN DIMENSION TABLE.
- REV. 1-19-99: CHANGED MINMUM DEPTH TABLE AND DRAWING IN GENERAL TO REFLECT REDUCTION IN INVERT DROP ACROSS CATCH BASIN.
- REV. 12-18-99: MODIFIED CATCH BASIN DIMENSION TABLE.
- REV. 5-27-01: CHANGED PAY ITEMS IN GENERAL NOTE (I) ADDED CATCH BASIN MAXIMUM DEPTH NOTE.

  REV. 8-01-12: REVISED CATCH BASIN LID FOR COMPLIANCE WITH AASHTO LRFD BRIDGE DESIGN SPECIFICATIONS, 4TH EDITION WITH INTERIMS. REVISED REINFORCING, GENERAL NOTES AND ADDITIONAL MISC. DRAFTING EDITS.

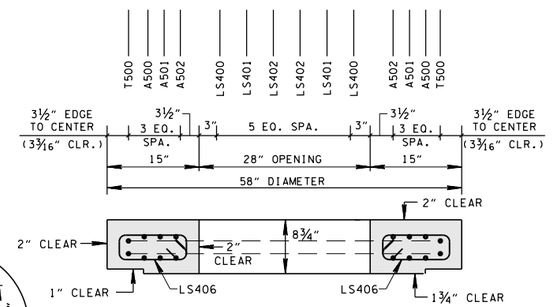

SECTION C-C

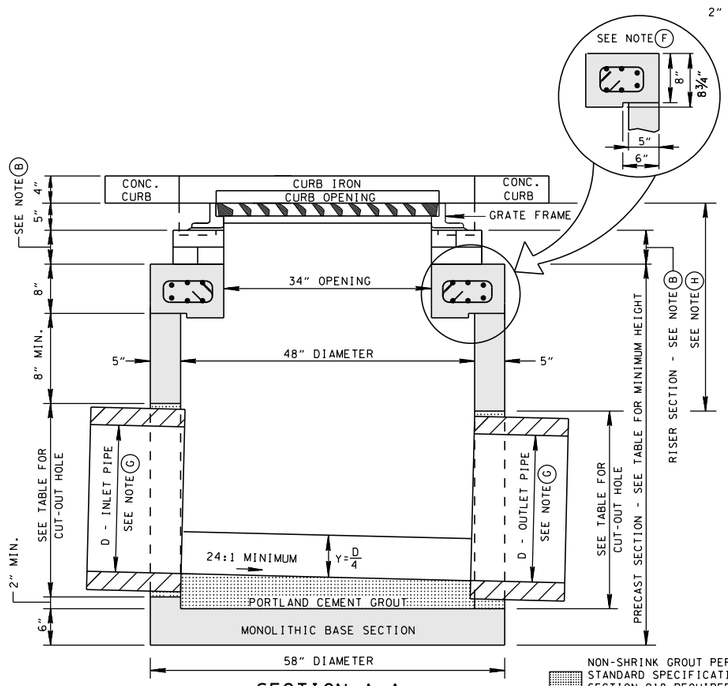

SECTION A-A

NON-SHRINK GROUT PER STANDARD SPECIFICATIONS SECTION 918 REQUIRED AROUND PIPE OPENINGS ONLY

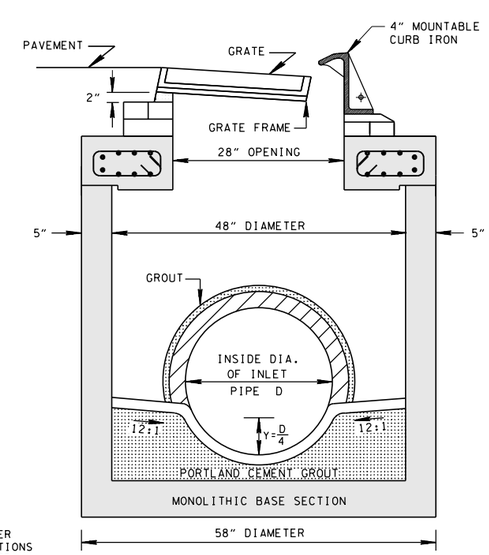

SECTION B-B

GENERAL NOTES

(A) ALL PRECAST ELEMENTS TO MEET ASTM C478 (CURRENT EDITION) AND AASHTO M199 (CURRENT EDITION) UNLESS SUPERSEDED BY THIS DRAWING.

CONCRETE: f'_c = 4,000 POUNDS PER SQUARE INCH AT 28 DAYS
REINFORCING STEEL: ASTM A615, F_y = 60,000 POUNDS PER SQUARE INCH
ALL REINFORCING IS TO BE INSTALLED AS DETAILED ON THIS DRAWING.

(B) THIS DIMENSION MAY VARY FROM A MINIMUM OF 0 INCHES TO A MAXIMUM OF 24 INCHES AS LONG AS 21 INCHES IS SATISFIED. THE CONTRACTOR HAS THE OPTION OF USING BRICK OR STANDARD PRECAST CONCRETE RISER FRAMES. THE USE OF BRICK SHALL BE LIMITED TO 6 INCHES. IF THIS DIMENSION EXCEEDS 6 INCHES, PRECAST CONCRETE RISER FRAMES SHALL BE USED AS SHOWN ON STANDARD DRAWING D-RF-1.

(C) PRECAST CATCH BASIN UNITS WHICH ARE DAMAGED DURING SHIPMENT OR INSTALLATION WILL BE REJECTED. IT SHALL BE THE RESPONSIBILITY OF THE CONTRACTOR TO REPLACE DAMAGED CATCH BASIN UNITS AT HIS OWN EXPENSE.

(D) APPROPRIATE SIZING AND LOCATION OF LIFTING DEVICES SHALL BE THE RESPONSIBILITY OF THE FABRICATOR.

(E) THE CONTRACTOR IS TO PATCH ALL LIFTING DEVICE HOLES WITH GROUT AND PLACE A MINIMUM OF ONE (1) INCH OF COVER OVER THE HARDWARE OF THESE DEVICES ON BOTH TOP AND BOTTOM SURFACES.

(F) ALTERNATIVE JOINT DETAILS MAY BE ACCEPTABLE. SEE STANDARD DRAWING D-CB-99R FOR ADDITIONAL DETAILS.

(G) SEE ROADWAY PLANS DRAINAGE TABULATION FOR PIPE INLET AND OUTLET ELEVATIONS. IF NEEDED, INVERT ELEVATIONS MAY BE ADJUSTED AS DIRECTED BY THE ENGINEER IN ORDER TO ACCOMMODATE INLET AND OUTLET PIPES.

(H) FOR CASES WHERE THE OUTLET PIPE DIAMETER IS LARGER THAN THE INLET PIPE DIAMETER, A MINIMUM 21 INCH DEPTH SHALL BE MAINTAINED ABOVE THE OUTLET PIPE.

(I) SEE STANDARD DRAWING D-CBB-12C FOR DETAILS REGARDING CAST IRON GRATES, FRAMES AND CURB INLETS.

(J) SEE STANDARD DRAWING D-CB-28RB FOR DETAILS REGARDING 60" AND LARGER CIRCULAR NO. 12 CATCH BASIN (FOR USE WITH 4" MOUNTABLE CURB).

(K) PAY DEPTH MEASUREMENT MADE FROM TOP OF GRATE TO OUTLET FLOW ELEVATION. PAYMENT FOR CATCH BASIN WILL BE MADE UNDER ITEM NUMBERS 611-28.01 CATCH BASINS, TYPE 28, 0'-4' DEPTH THROUGH 611-28.05 CATCH BASINS, TYPE 28, > 16'-20' DEPTH PER EACH. PAYMENT INCLUDES RISER SECTION AND GRATE.

☐ MINOR REVISION -- FHWA APPROVAL NOT REQUIRED.

STATE OF TENNESSEE
DEPARTMENT OF TRANSPORTATION

STANDARD PRECAST 48" CIRCULAR NO. 28 CATCH BASIN
(FOR USE WITH 4" MOUNTABLE CURB)

NOT TO SCALE | 12-18-95 | D-CB-28RA