REV. 2-13-04: CHANGED REINFORCING STEEL IN BASE SECTION.

REV. 5-5-05: ADDED EXTRA STEEL DIMENSION TO SECTION C-C.

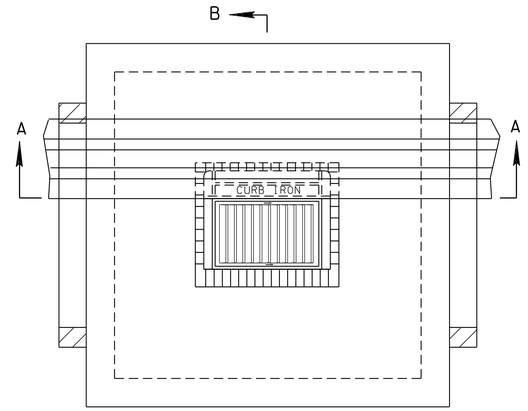

PLAN VIEW

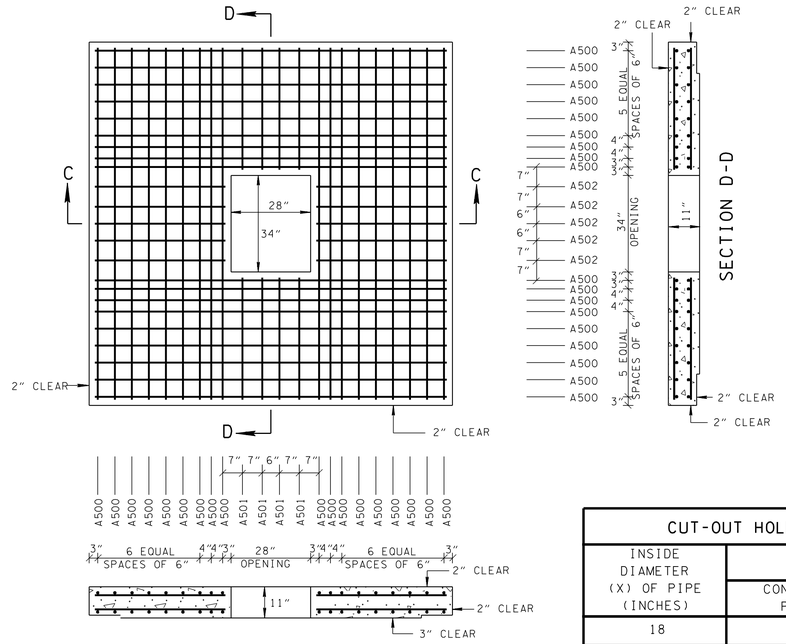

SECTION C-C

SECTION D-D

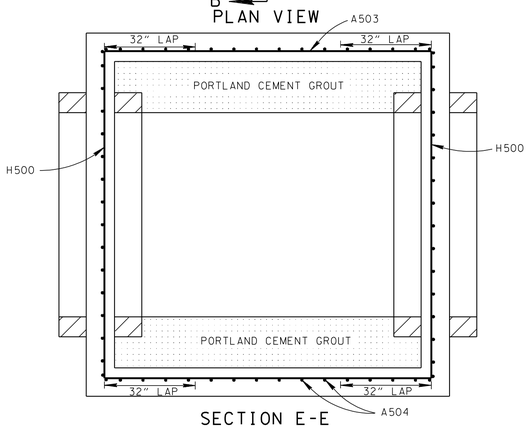

SECTION E-E

REINFORCING STEEL LEGEND

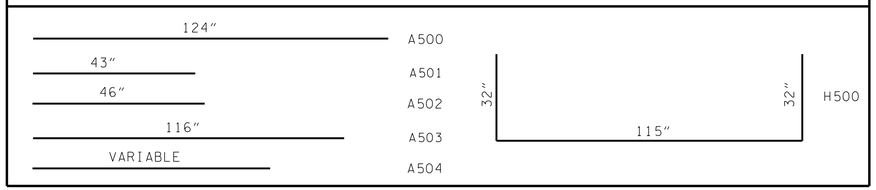

CATCH BASIN DIMENSIONS

INSIDE WIDTH OF CATCH BASIN (INCHES)	WALL THICKNESS W (INCHES)	OUTSIDE WIDTH OF CATCH BASIN (INCHES)	MAX. INLET OR OUTLET CONC. PIPE SIZE - STR. (INCHES)	MAX. INLET OR OUTLET CONC. PIPE SIZE - 90° (INCHES)	DIMENSION C (INCHES)
108	10	128	78	72	4.5

CUT-OUT HOLES FOR INLET & OUTLET PIPES

INSIDE DIAMETER (X) OF PIPE (INCHES)	DIAMETER OF CUT-OUT HOLES F & G - (INCHES)		
	CONCRETE PIPE	CORRUGATED METAL PIPE	POLYETHYLENE PIPE
18	26	21	24
24	32	27	31
30	40	33	39
36	47	40	45
42	54	46	50
48	61	52	56
54	68	58	——
60	75	64	——
66	82	70	——
72	89	76	——
78	96	82	——

CUT- OUT HOLES FOR PRECAST STRUCTURES TO BE CORED OR FORMED IN ORDER TO OBTAIN A SMOOTH EDGED HOLE. SCORED OR ETCHED HOLES WITH REINFORCING STEEL LEFT UNCUT WILL NOT BE PERMITTED.

CATCH BASIN MINIMUM DEPTH TABLE

INSIDE DIAMETER (X) OF PIPE (INCHES)	MINIMUM DEPTH - (FEET)		
	CONCRETE PIPE	CORRUGATED METAL PIPE	POLYETHYLENE PIPE
18	4.79	4.58	4.71
24	5.29	5.08	5.25
30	5.88	5.58	5.83
36	6.42	6.13	6.33
42	6.96	6.63	6.79
48	7.50	7.13	7.29
54	8.04	7.63	——
60	8.58	8.13	——
66	9.13	8.63	——
72	9.67	9.13	——
78	10.21	9.63	——

(1) DEPTH MEASUREMENT MADE FROM TOP OF GRATE TO OUTLET FLOW ELEVATION BASED ON INLET AND OUTLET PIPES BEING THE SAME DIAMETER, IF OUTLET PIPE IS GREATER ADJUSTMENT IN DEPTHS MUST BE MADE TO ACCOMMODATE THIS SITUATION.

(2) TO DETERMINE FLOOR OF CATCH BASIN ELEVATION, WHEN INLET AND OUTLET PIPES ARE THE SAME SIZE, ADD PIPE WALL THICKNESS PLUS 1.5" TO THE ABOVE MINIMUM DEPTHS.

CATCH BASIN MAXIMUM DEPTH NOTE

MAXIMUM DEPTH FOR THIS STRUCTURE IS 28.00'. WHEN DEPTH REQUIREMENTS EXCEED THIS DEPTH THE CONTRACTOR IS TO USE OTHER VERSIONS OF THE NO. 41 CATCH BASIN.

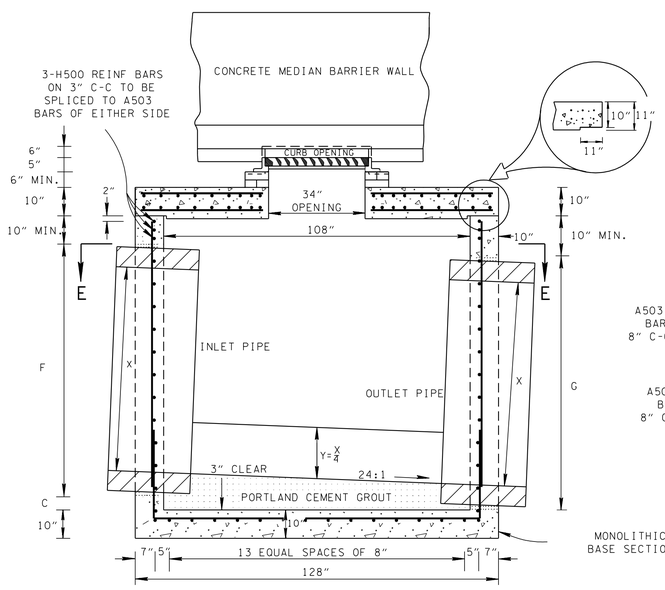

SECTION A-A

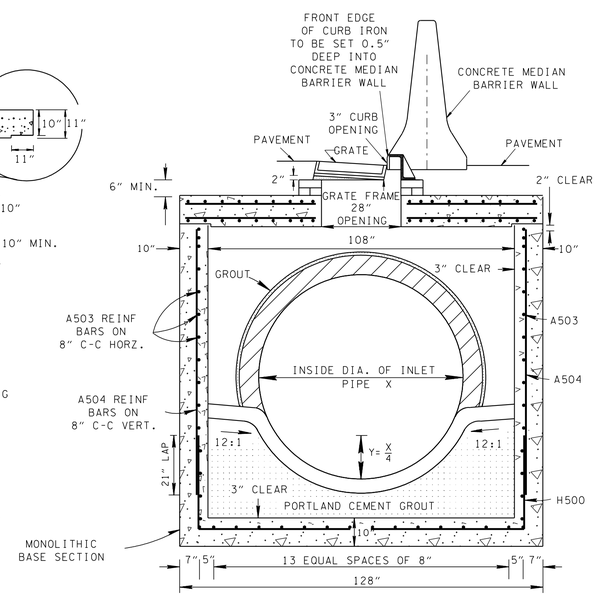

SECTION B-B

GENERAL NOTES

(A) DRAWING TO BE USED FOR ALL CAST-IN-PLACE AND ALL PRECAST NO. 41 CONCRETE CATCH BASINS.

(B) CAST-IN-PLACE CONCRETE CATCH BASINS SHALL BE CONSTRUCTED IN ACCORDANCE WITH STANDARD SPECIFICATIONS, SECTION 611 AND/OR SPECIAL PROVISIONS.

(C) THE CONTRACTOR MAY WITH PERMISSION FROM THE ENGINEER SUBSTITUTE PRECAST CATCH BASINS FOR CAST-IN-PLACE CATCH BASINS PROVIDED THAT ALL PRECAST ELEMENTS MEET ASTM M913 (CURRENT EDITION) UNLESS SUPERSEDED BY THIS DRAWING.

CONCRETE: F_C = 4,000 POUNDS PER SQUARE INCH AT 28 DAYS
REINFORCING STEEL: ASTM A615, F_Y = 60,000 POUNDS PER SQUARE INCH
ALL REINFORCING IS TO BE INSTALLED AS DETAILED ON THIS DRAWING.

(D) PRECAST CATCH BASIN UNITS WHICH ARE DAMAGED DURING SHIPMENT OR INSTALLATION WILL BE REJECTED. IT SHALL BE THE RESPONSIBILITY OF THE CONTRACTOR TO REPLACE DAMAGED CATCH BASIN UNITS AT HIS OWN EXPENSE.

(E) ADDITIONAL REINFORCING STEEL NECESSARY ABOVE THE CORED OR FORMED CUT-OUT HOLES TO MAINTAIN THE INTEGRITY OF THE STRUCTURE DURING HANDLING AND PLACEMENT SHALL BE THE RESPONSIBILITY OF THE FABRICATOR.

(F) APPROPRIATE SIZING AND LOCATION OF LIFTING DEVICES SHALL BE THE RESPONSIBILITY OF THE FABRICATOR TO ASSURE BALANCED HANDLING DURING INSTALLATION OF THE CATCH BASIN.

(G) THE CONTRACTOR IS TO PATCH ALL LIFTING DEVICE HOLES AND PLACE A MINIMUM OF ONE(1) INCH OF COVER OVER THE HARDWARE OF THESE DEVICES ON BOTH TOP AND BOTTOM SURFACES.

(H) INVERT ELEVATIONS ARE TO BE ADJUSTED AS DIRECTED BY THE ENGINEER IN ORDER TO ACCOMMODATE INLET AND OUTLET PIPES.

(I) SEE STANDARD DRAWING D-CBB-31 FOR DETAILS REGARDING CAST IRON GRATES, FRAMES AND CURB INLETS.

(J) PAYMENT FOR CATCH BASIN WILL BE MADE UNDER ITEM NUMBERS 611-41.02 CATCH BASINS, TYPE 41, > 4'-8' DEPTH THROUGH 611-41.07 CATCH BASINS, TYPE 41, > 24'-28' DEPTH PER EACH.

MINOR REVISION -- FHWA APPROVAL NOT REQUIRED.

STATE OF TENNESSEE
DEPARTMENT OF TRANSPORTATION

STANDARD
9' X 9' SQUARE
CONCRETE NO. 41
CATCH BASIN
(FOR USE UNDER CONCRETE MEDIAN BARRIER WALL)

7-10-02 | D-CB-41SE