REV. 4-15-00: CHANGED LID THICKNESS FOR 96" DIAMETER.

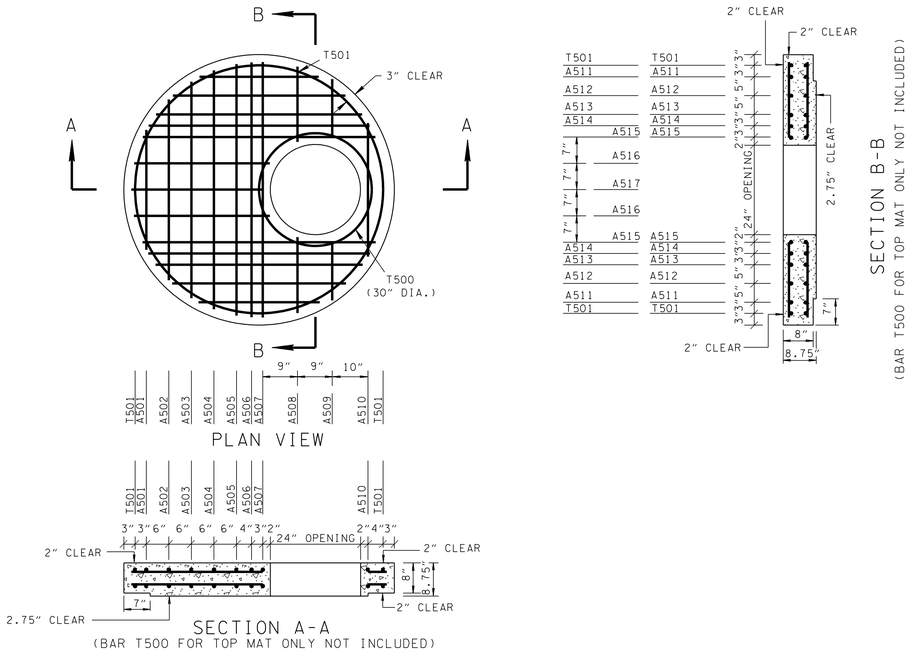


LID DETAIL FOR 60" DIAMETER NO. 3 MANHOLE

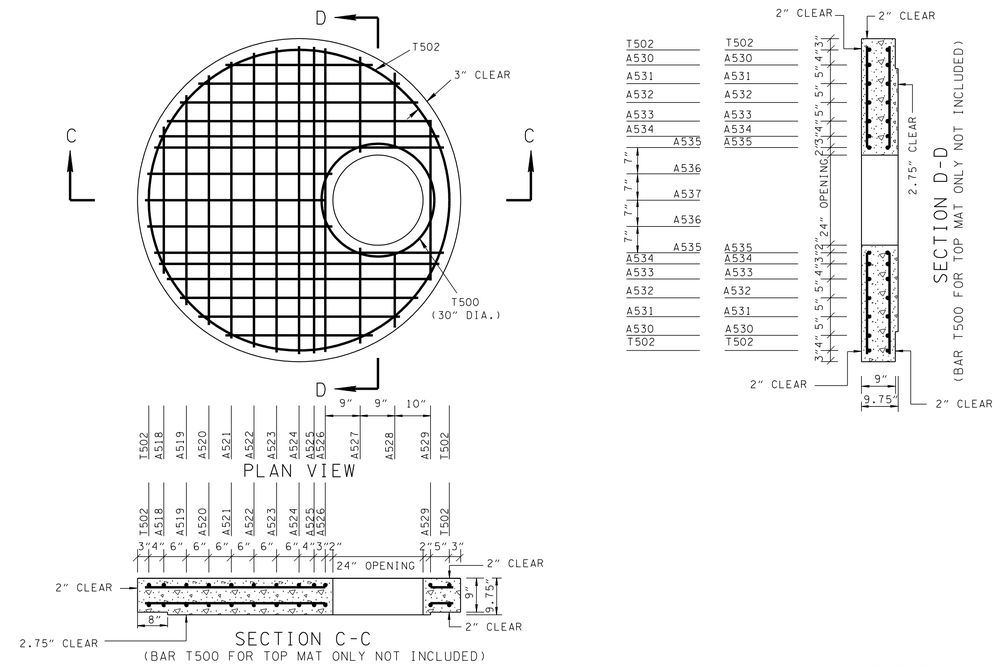


LID DETAIL FOR 72" DIAMETER NO. 3 MANHOLE

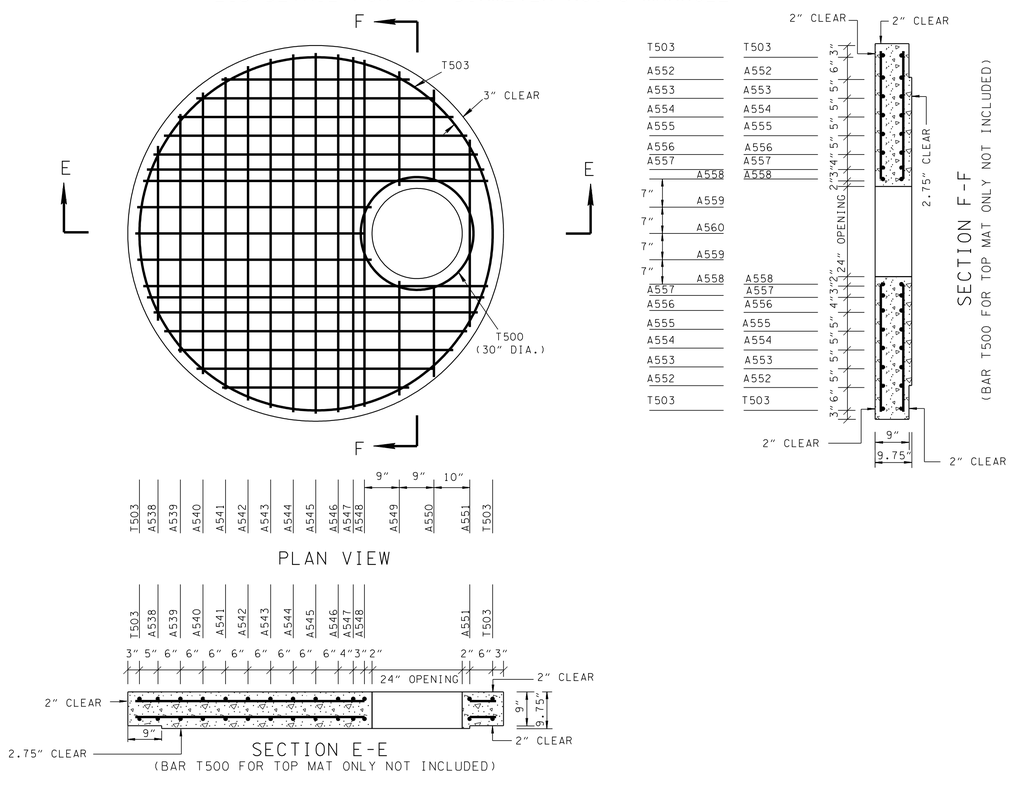


LID DETAIL FOR 84" DIAMETER NO. 3 MANHOLE

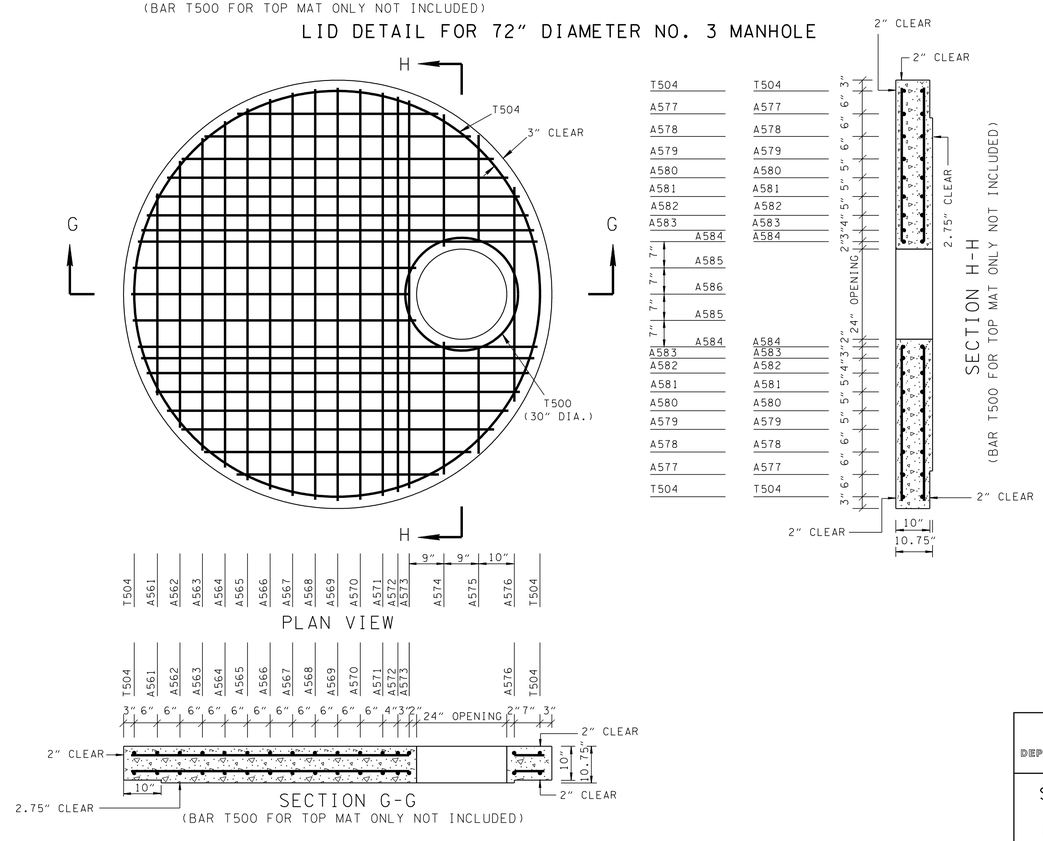


LID DETAIL FOR 96" DIAMETER NO. 3 MANHOLE

MINOR REVISION -- FHWA APPROVAL NOT REQUIRED.

STATE OF TENNESSEE
DEPARTMENT OF TRANSPORTATION

STANDARD PRECAST CIRCULAR LID DETAILS FOR NO. 3 MANHOLE

5-1-97 | D-MH-3