LID DETAIL FOR 48" DIAMETER NO. 3 MANHOLE

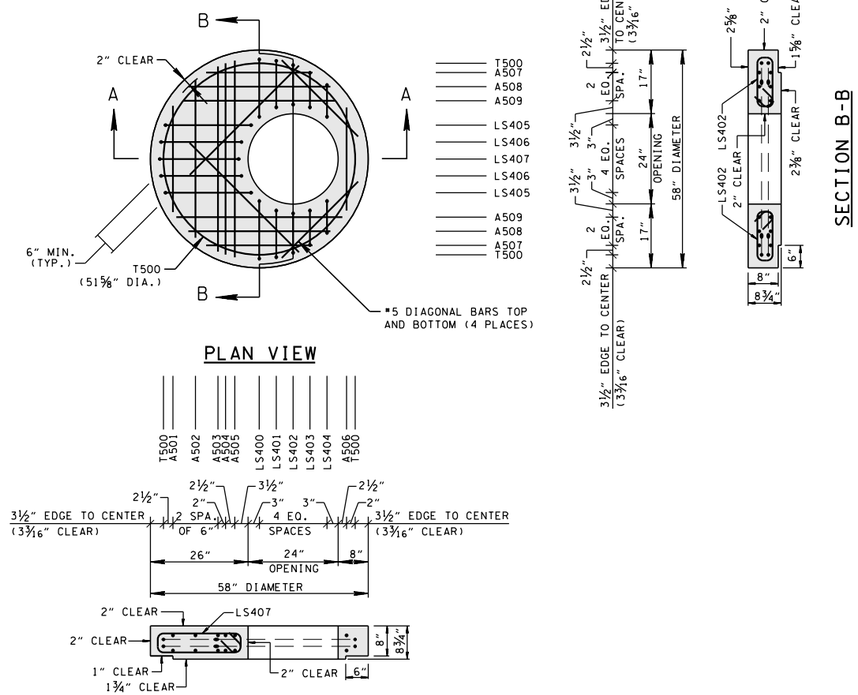

LID DETAIL FOR 60" DIAMETER NO. 3 MANHOLE

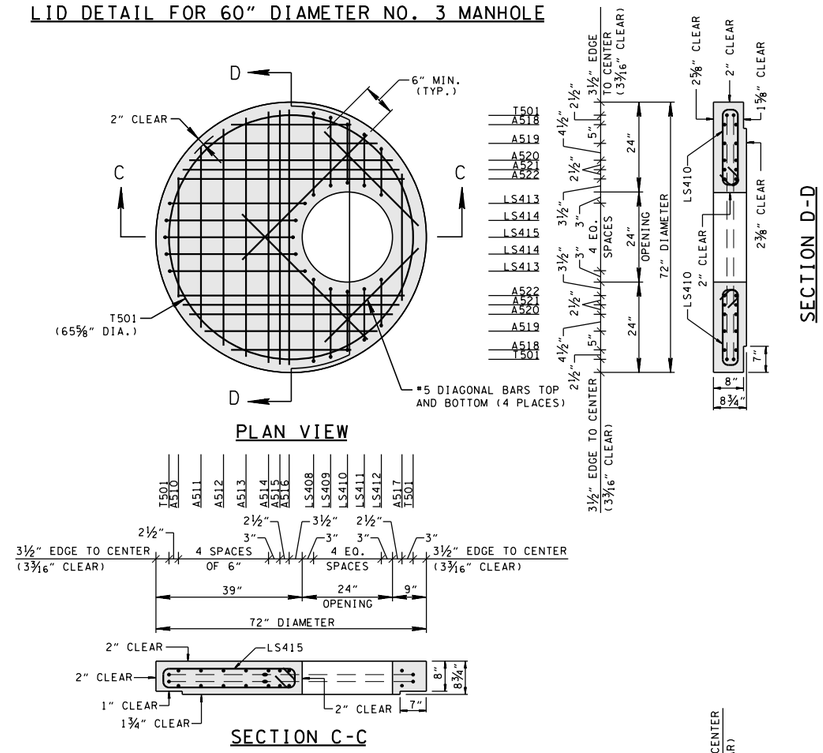

REV. 4-15-00: CHANGED LID THICKNESS FOR 96" DIAMETER.

REV. 8-01-12: REVISED MANHOLE LIDS FOR COMPLIANCE WITH AASHTO LRFD BRIDGE DESIGN SPECIFICATIONS, 4TH EDITION WITH INTERIMS. REVISED REINFORCING AND ADDITIONAL MISC. DRAFTING EDITS. ADDED 48" MANHOLE LID & MOVED 96" MANHOLE LID TO STANDARD DRAWING D-MH-3A.

LID DETAIL FOR 72" DIAMETER NO. 3 MANHOLE

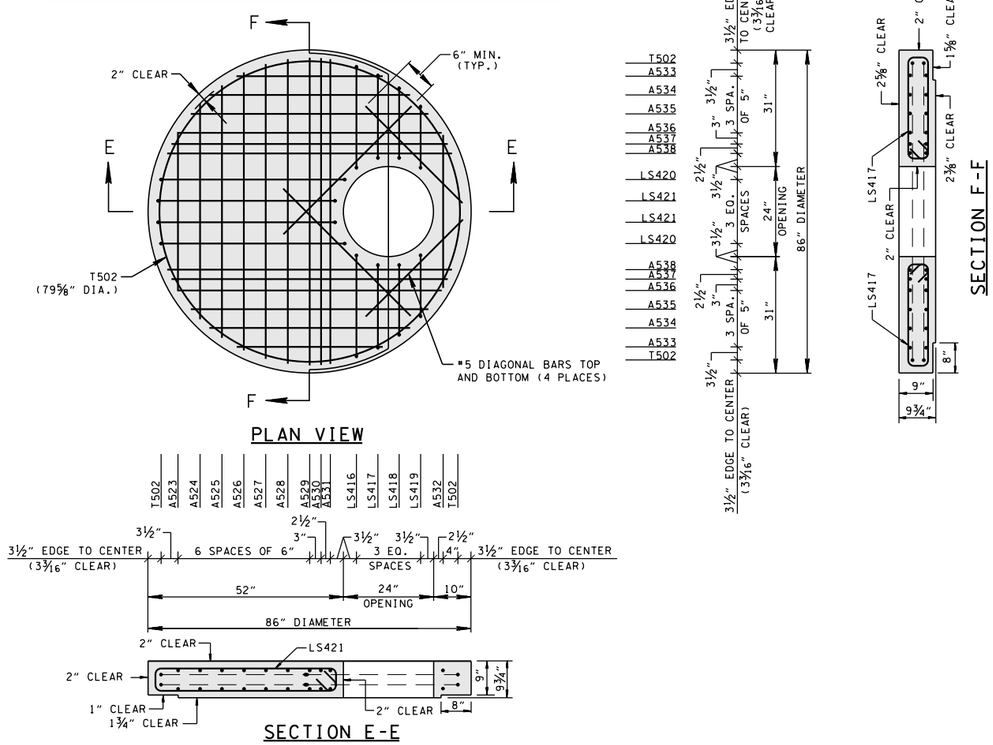

LID DETAIL FOR 84" DIAMETER NO. 3 MANHOLE

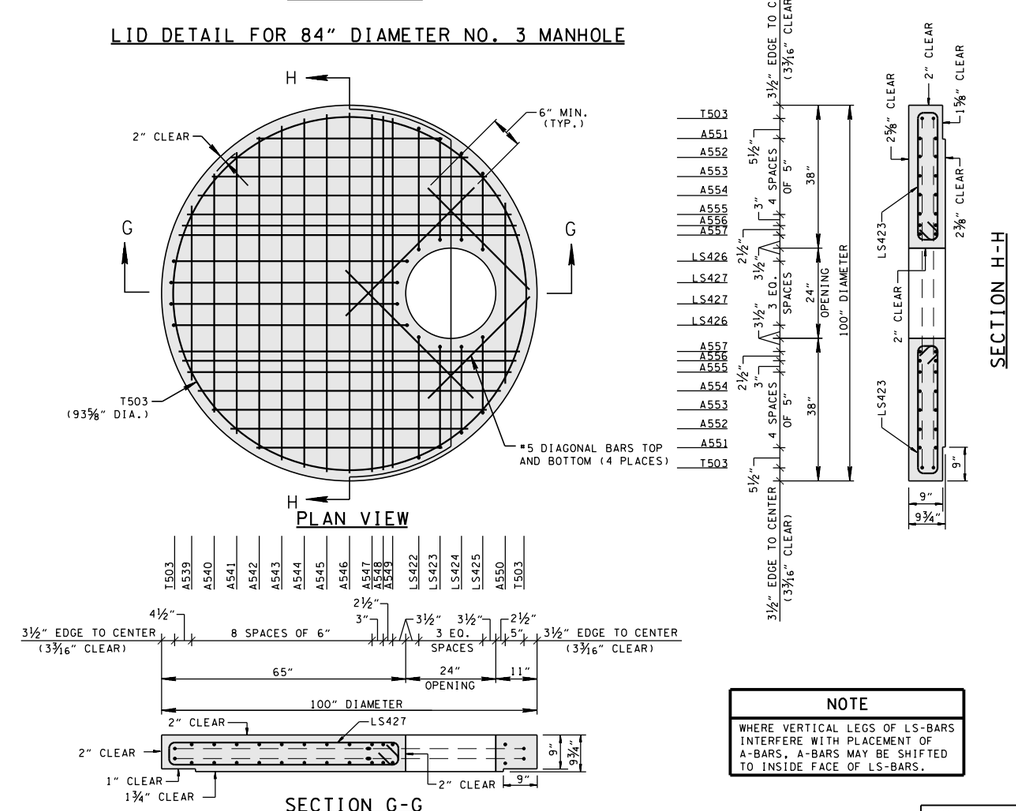

MINOR REVISION -- FHWA APPROVAL NOT REQUIRED.

NOTE

WHERE VERTICAL LEGS OF LS-BARS INTERFERE WITH PLACEMENT OF A-BARS, A-BARS MAY BE SHIFTED TO INSIDE FACE OF LS-BARS.

STATE OF TENNESSEE
DEPARTMENT OF TRANSPORTATION

STANDARD PRECAST CIRCULAR LID DETAILS FOR NO. 3 MANHOLE

NOT TO SCALE | 5-1-97 | D-MH-3