MULTI-DIRECTIONAL BREAKAWAY SLIP BASE (D)(E)(K)

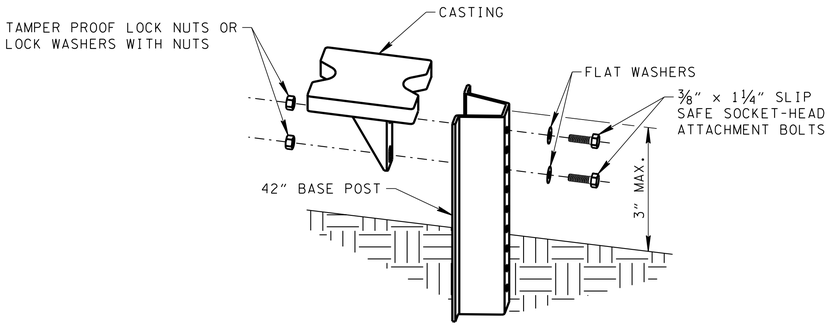

NOTE: BOLTS SHOULD BE TIGHTENED 1/2 TO 3/4 TURN AFTER SNUG.

STEP 1

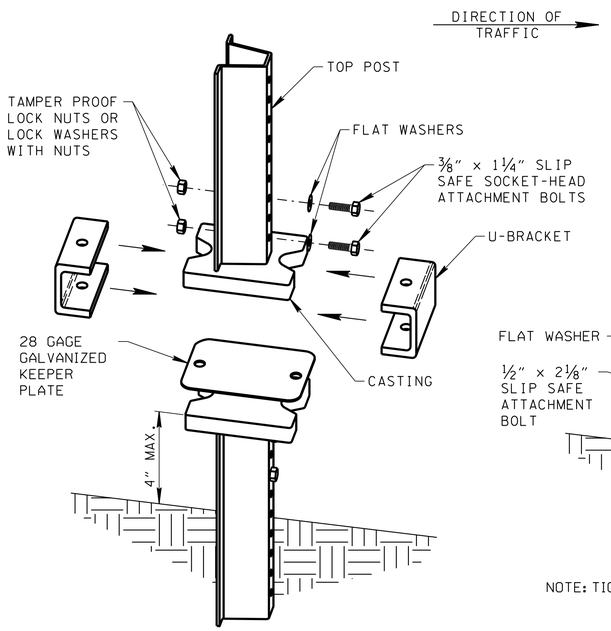

STEP 2

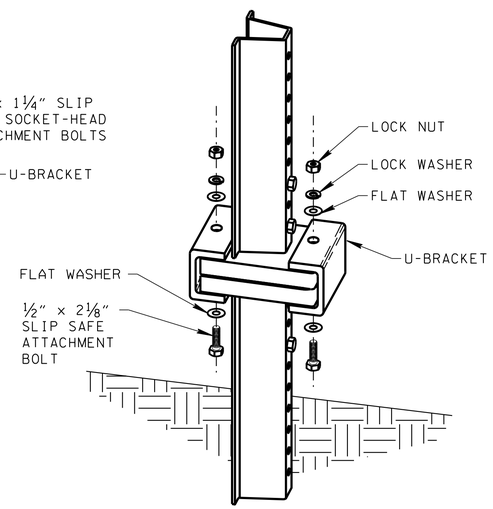

NOTE: TIGHTEN NUTS 1/3 TO 1/2 TURN AFTER SNUG.

STEP 3

SINGLE-DIRECTIONAL BREAKAWAY LAP SPLICE (H)

REV. 7-19-13: ADDED NOTE (M)

FLORIDA LAP SPLICE

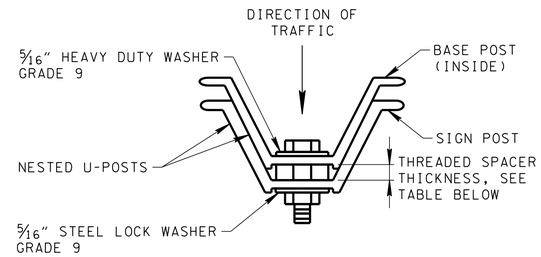

SECTION
(THRU BREAKAWAY SPLICE)

SPACER THICKNESS FOR NESTED POSTS	
POST SIZE (LB/FT)	THICKNESS (INCHES)
2.00	3/8
2.50	5/16
2.75	1/4
3.00	5/8
4.00	1/2

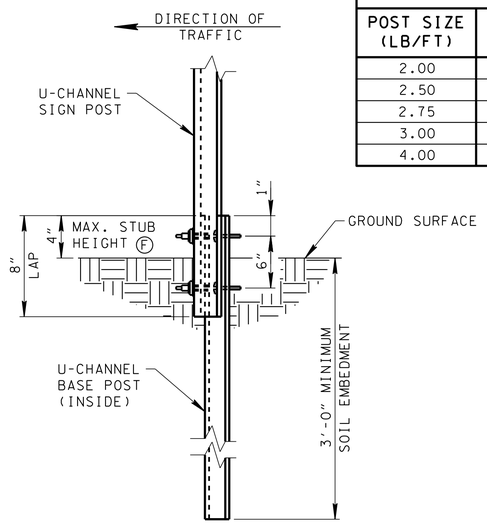

ELEVATION

SPACER BAR ALTERNATE

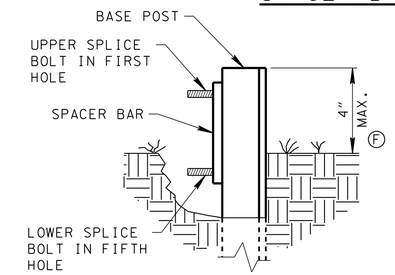

SIDE VIEW

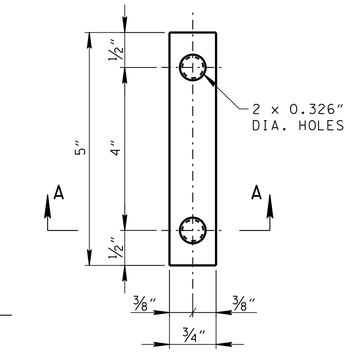

SPACER BAR ELEVATION

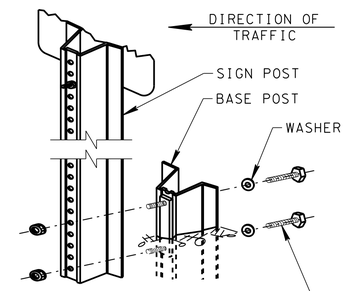

ISOMETRIC VIEW

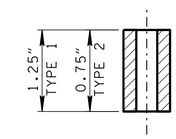

SECTION A-A

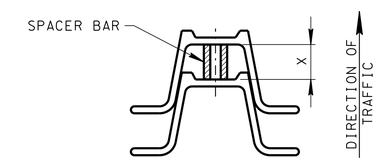

NOTE: WHEN 'X' IS GREATER THAN 3/4", USE TYPE 1 SPACER BAR
WHEN 'X' IS 3/4" OR LESS, USE TYPE 2 SPACER BAR

SECTION
(THRU SPACER BAR)

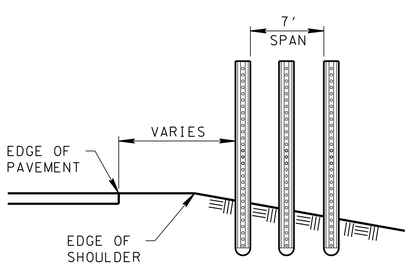

3 LB/FT BREAKAWAY POSTS
3 POSTS WITHIN 7' SPAN

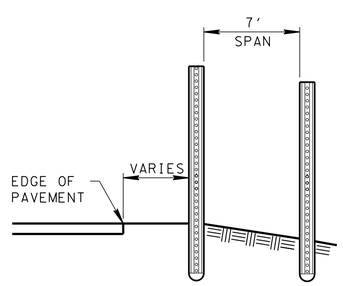

3 LB/FT POSTS
WITH OR WITHOUT BREAKAWAY POSTS
2 POSTS WITHIN 7' SPAN

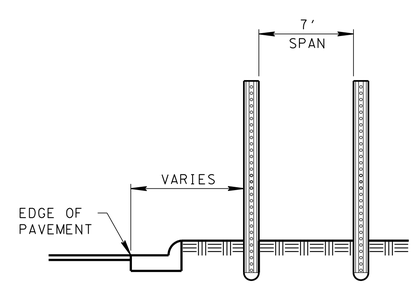

4 LB/FT BREAKAWAY POSTS
2 POSTS WITHIN 7' SPAN

TYPICAL U-POST INSTALLATION DETAILS (B)(C)

NOT TO SCALE

GENERAL NOTES

(A) BREAKAWAY SIGN SUPPORTS SHALL BE USED ON ALL SIGN POSTS LOCATED WITHIN THE CLEAR ZONE OF A ROADWAY AND NOT PROTECTED BY AN APPROVED BARRIER SYSTEM.

(B) SINGLE OR DOUBLE POSTS SIZED 3 LBS/FT OR SMALLER WITH A 7-FOOT CLEAR SPAN BETWEEN DOUBLE POSTS MAY BE DIRECT DRIVEN, AS THE POSTS ALONE ARE CONSIDERED BREAKAWAY PER FHWA. ALL TRIPLE U-POST INSTALLATIONS OF ANY SIZE POST, AND ALL 4 LBS/FT U-POST (MEMBER DESIGNATION U7 ON T-S-19) INSTALLATIONS OF ANY NUMBER OF POSTS, SHALL UTILIZE AN APPROVED BREAKAWAY SYSTEM. MULTI-DIRECTIONAL OR LAP-SPLICE SYSTEMS MAY BE USED, EXCEPT WHERE NOTED OTHERWISE, OR AS DIRECTED BY THE ENGINEER.

(C) NO MORE THAN 2 SIGN POSTS OF ANY GAGE SHALL BE LOCATED WITHIN A 7-FOOT CIRCLE.

(D) MULTI-DIRECTIONAL BREAKAWAY SLIP BASE SHALL BE USED AT LOCATIONS WHERE THE POSSIBILITY EXISTS OF THE SIGN BEING HIT FROM ANY DIRECTION. ALL U-POST SIGNS LOCATED IN ISLANDS, AT INTERSECTIONS, OR LOCATED ALONG THE OUTSIDE OF A HORIZONTAL CURVE SHALL BE EQUIPPED WITH A BREAKAWAY SYSTEM, REGARDLESS OF THE NUMBER OF POSTS OR SPACING.

(E) ALL SIGN PANELS PLACED PARALLEL TO THE DIRECTION OF TRAFFIC FLOW (SUCH AS ONE-WAY SIGNS ON A DIVIDED HIGHWAY) SHALL BE MOUNTED ON A MULTI-DIRECTIONAL BREAKAWAY SYSTEM.

(F) BASE POST STUB HEIGHT SHALL BE 4 INCHES OR LESS ABOVE FINISHED GROUND SURFACE. WHEN DRIVING THE STUB POST, A DRIVE CAP OR OTHER ACCEPTABLE MEANS SHALL BE USED TO PROTECT THE TOP OF THE STUB POST FROM DAMAGE.

(G) ALL FINISHED COMPONENTS OF THE SLIP BASE SYSTEM SHALL BE PERMANENTLY MARKED TO INDICATE THE MANUFACTURER. METHOD, DESIGN, AND LOCATION OF MARKING SHALL BE AS APPROVED BY THE ENGINEER.

(H) THE STUB POST AND THE U-CHANNEL POST SHALL BE OF THE SAME SIZE (LB/FT) AND FROM THE SAME MANUFACTURER.

(I) INTERMIXING OF U-CHANNEL POSTS WITH PERFORATED SQUARE TUBE POSTS AT ANY SIGN INSTALLATION LOCATION WILL NOT BE ALLOWED.

(J) FOR BASE STUB AND U-POST MATERIAL PROPERTIES, SEE STANDARD DRAWING T-S-19. FOR DETAILS OF SIGN CONNECTION TO U-POST, SEE OTHER T-S-SERIES STANDARDS.

(K) INSTALL MULTI-DIRECTIONAL SLIP BASE STRUCTURAL SIGN SUPPORT SYSTEM AS SHOWN OR APPROVED EQUAL. ONLY THOSE SYSTEMS APPROVED BY FHWA ACCEPTANCE LETTER AND FOUND ON THE TDOT QPL SHALL BE USED.

(L) STEEL U-POSTS, BASE POSTS, SLIP BASES, AND HARDWARE SHALL BE SELECTED FROM THE QPL.

(M) TO PAID FOR UNDER ITEM NO. 713-1.22 U POST SLIP BASE PER EACH (INCLUDES COST OF SLIP BASE AND STUB)

MINOR REVISION -- FHWA APPROVAL NOT REQUIRED.

STATE OF TENNESSEE
DEPARTMENT OF TRANSPORTATION

BREAKAWAY
U-POST
SIGN SUPPORTS

09-01-12 | T-S-23C