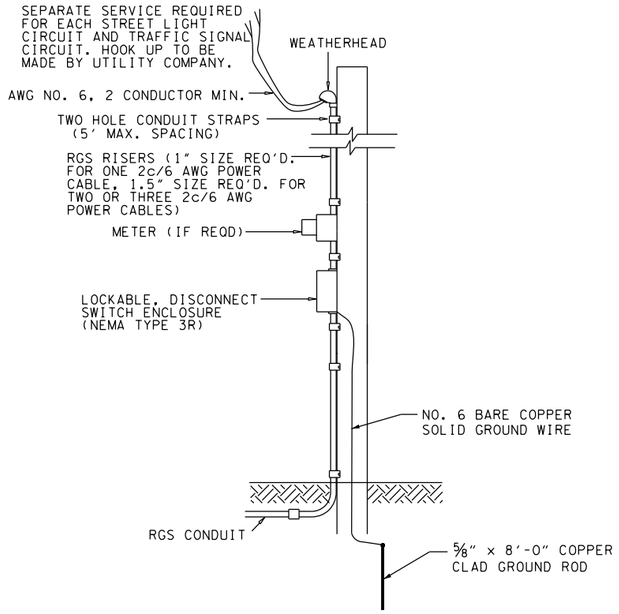

POWER SERVICE DETAIL

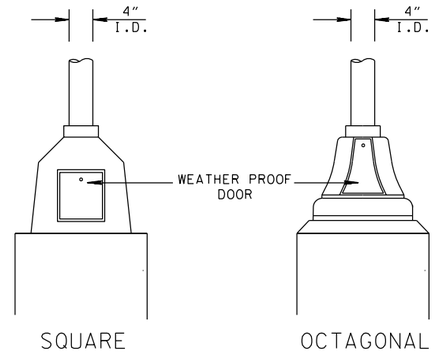

CAST PEDESTAL BASE ALTERNATES

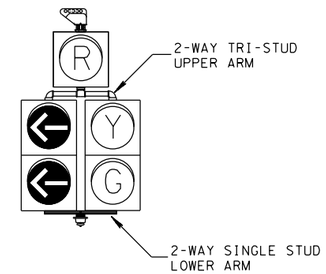

5-SECTION SIGNAL HEAD

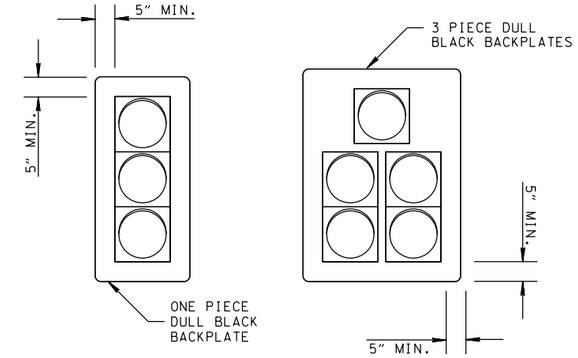

TRAFFIC SIGNAL BACKPLATE DETAIL

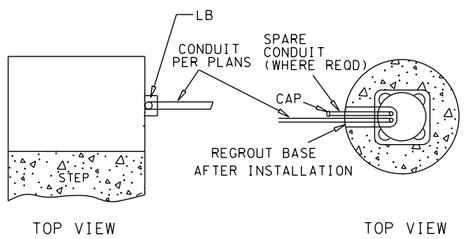

TOP VIEW

TOP VIEW

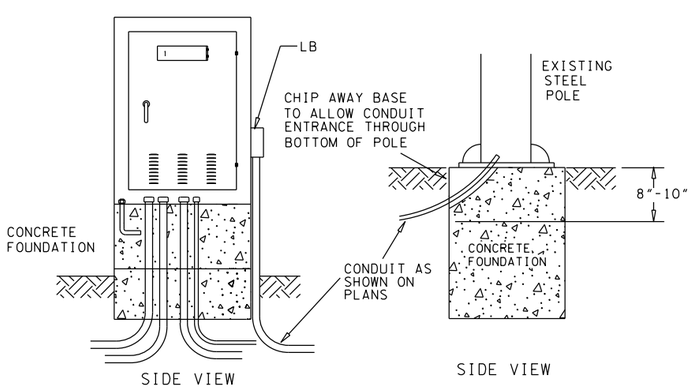

SIDE VIEW

SIDE VIEW

CONDUIT ENTRANCE DETAIL
(EXISTING CABINET OR POLE)

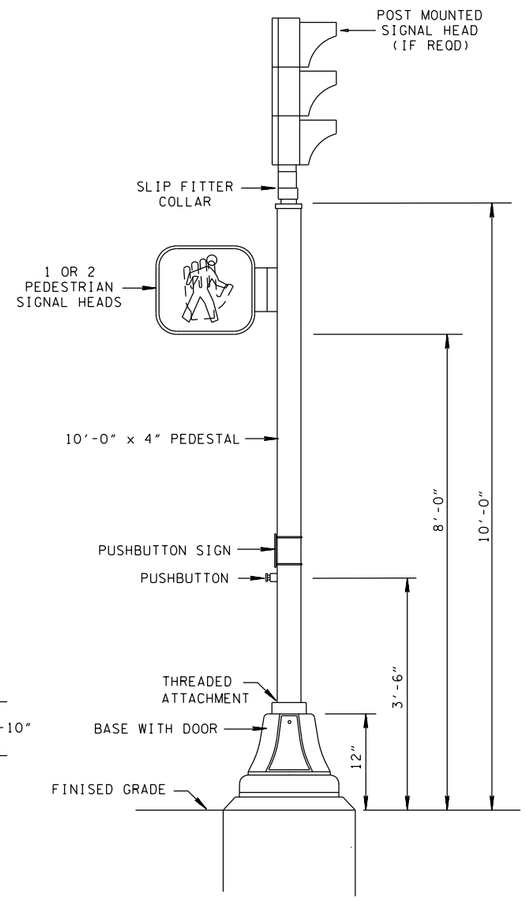

PEDESTAL MOUNTING

SEE STD.DWG. NO. T-SG-10 FOR FOUNDATION DETAILS & NOTES

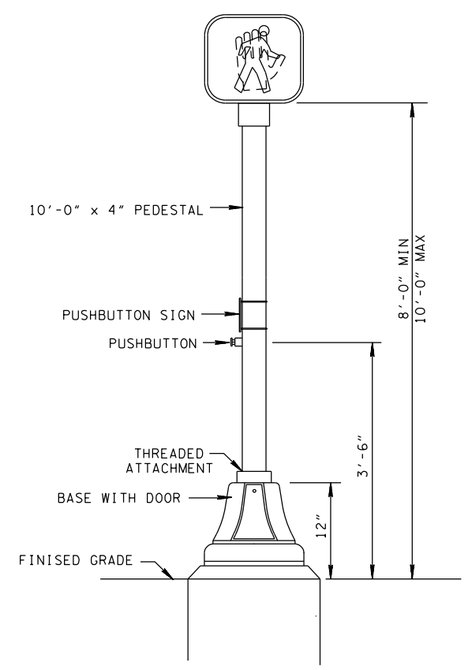

PEDESTAL MOUNTING

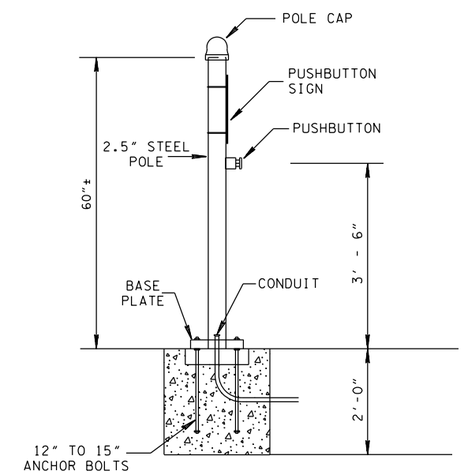

PEDESTRIAN PUSHBUTTON POST

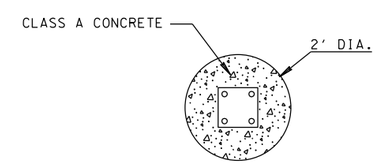

FOUNDATION DETAIL
PEDESTRIAN PUSHBUTTON POST

MINOR REVISION -- FHWA APPROVAL NOT REQUIRED.

STATE OF TENNESSEE
DEPARTMENT OF TRANSPORTATION

MISCELLANEOUS SIGNAL DETAILS

7-29-04 | T-SG-9A

3/14/2014 9:53:58 AM
F:\backup d\pak on JJ96208\WORKSTD\2010 std eng\TSG9A_00000.dgn