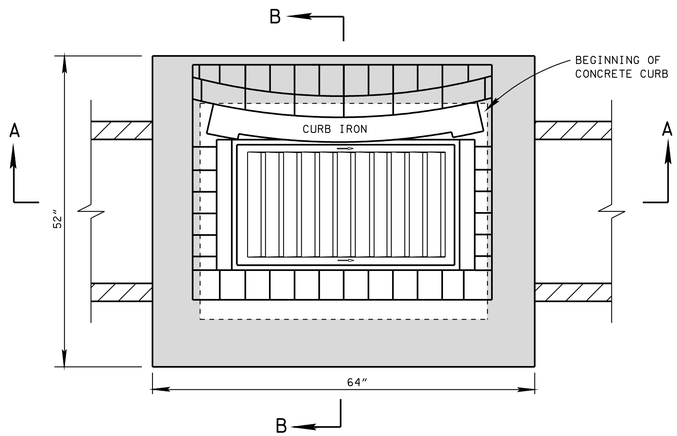

PLAN VIEW

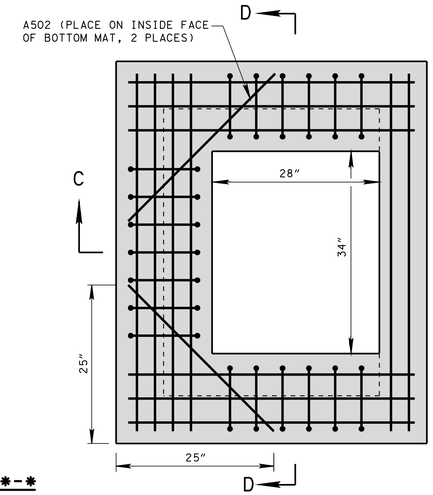

PLAN VIEW

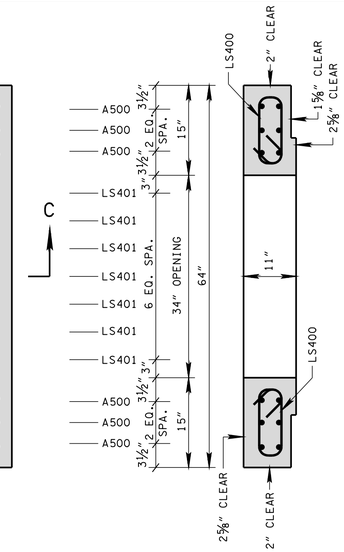

SECTION D-D

CATCH BASIN MAXIMUM DEPTH NOTE

MAXIMUM DEPTH FOR THIS STRUCTURE IS 20.00′.

CATCH BASIN DIMENSIONS

INSIDE DIAMETER (D) OF PIPE (INCHES)	PIPE WALL THICKNESS (INCHES)	DIAMETER OF CUT-OUT HOLES (INCHES)	BOX SECTION MINIMUM HEIGHTS (INCHES)	FOR DESIGN USE ONLY CATCH BASIN MINIMUM DESIGN DEPTH (FEET)
18	2½	25	51	3.88
24	3	32	58	4.42
(4) 30	3½	39	65	4.96
(4) 36	4	46	72	5.50

(1) CUT-OUT HOLES BASED ON REINFORCED CONCRETE PIPE WITH WALL TYPE "B".

(2) ALL FLEXIBLE PIPE MATERIALS REQUIRE GASKET. SEE STANDARD DRAWING D-PB-2.

(3) CUT-OUT HOLES FOR PRECAST STRUCTURES TO BE FORMED IN ORDER TO OBTAIN A SMOOTH EDGED HOLE. SCORED OR ETCHED HOLES WITH REINFORCING STEEL LEFT UNCUT WILL NOT BE PERMITTED.

(4) TO BE USED IN 48 INCH INTERIOR WALLS ONLY.

- REV. 12-18-96: MODIFIED DRAWING NO. D-CB-12S BY CHANGING CURB IRON.
- REV. 12-31-96: REMOVED 0.5″ PREMOLDED FIBER EXPANSION JOINT FROM SECTION "B-B". REMOVED OLD GENERAL NOTE (H) CHANGED LABEL OF LAST THREE GENERAL NOTES.
- REV. 10-26-97: CHANGED MINIMUM DEPTH TABLE AND MODIFIED STEEL IN BASE SECTION.
- REV. 1-19-99: MODIFIED CATCH BASIN MINIMUM DEPTH TABLE.
- REV. 3-20-00: ADDED SPECIAL NOTE RESTRICTING USE OF NO. 13 CATCH BASINS TO RADIUS LESS THAN 25 FEET.
- REV. 5-27-01: CHANGED PAY ITEMS IN GENERAL NOTE (J) ADDED CATCH BASIN MAXIMUM DEPTH NOTE.
- REV. 7-29-02: CHANGED ASTM SPECIFICATION IN GENERAL NOTE (C)

  REV. 8-01-12: REVISED CATCH BASIN FOR COMPLIANCE WITH AASHTO LRFD BRIDGE DESIGN SPECIFICATIONS, 4TH EDITION WITH INTERIMS. REVISED REINFORCING, GENERAL NOTES, LEGEND AND ADDITIONAL MISC. DRAFTING EDITS.
- REV. 9-24-12: MODIFIED TOP SLAB AND MINIMUM DEPTH.

SECTION *-*

X-SECT. VIEW IS PROVIDED ON STANDARD DRAWING D-CB-99 SHOWING REINFORCEMENT REQUIREMENTS AROUND PIPE OPENINGS

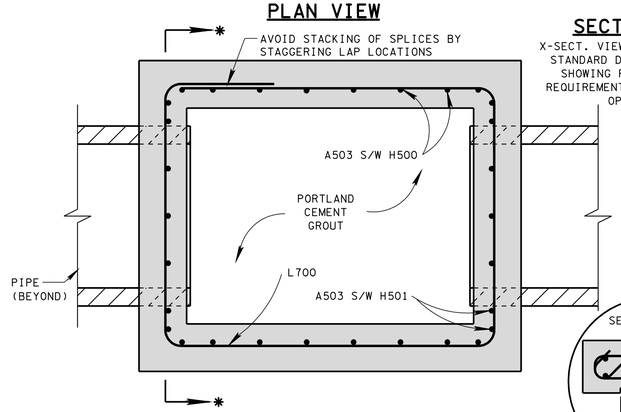

SECTION E-E

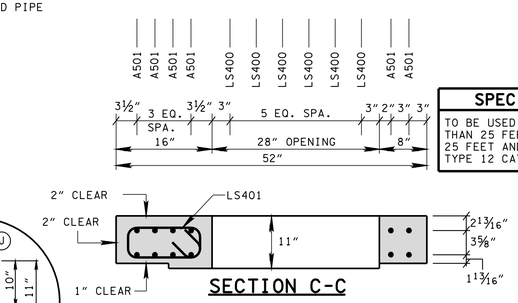

SPECIAL NOTE

TO BE USED ON RADIUS LESS THAN 25 FEET. FOR RADIUS 25 FEET AND GREATER USE TYPE 12 CATCH BASIN.

SECTION C-C

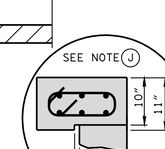

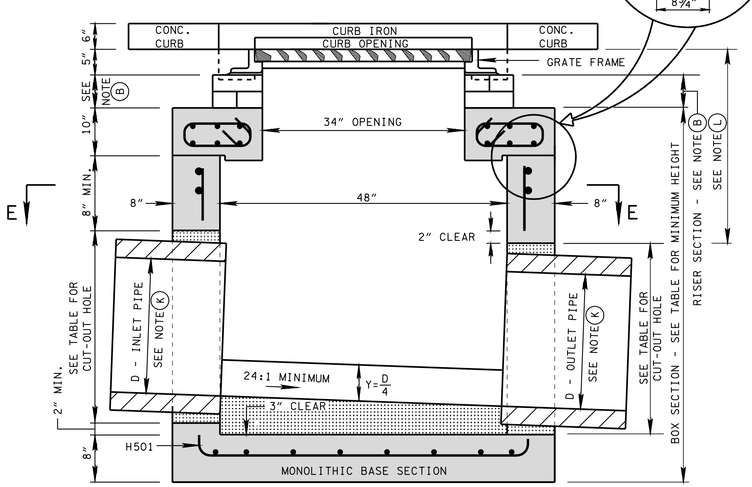

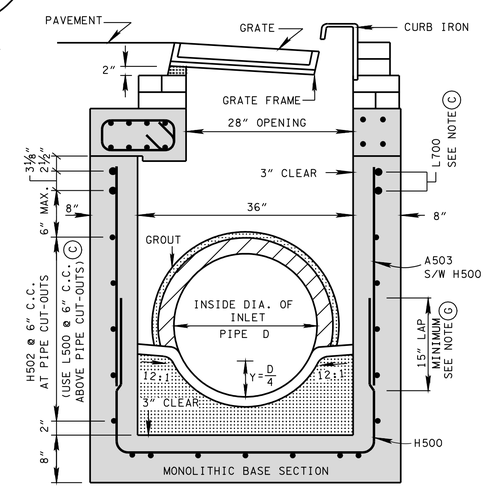

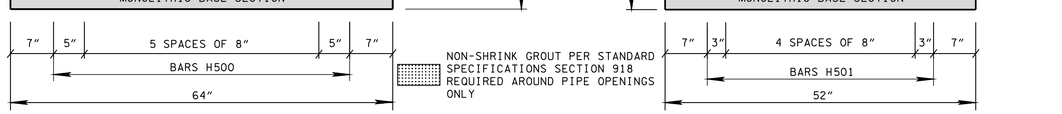

SECTION A-A

SECTION B-B

GENERAL NOTES

(A) DRAWING TO BE USED FOR ALL CAST-IN-PLACE NO. 13 CONCRETE CATCH BASINS AND ALL PRECAST NO. 13 CONCRETE CATCH BASINS THAT ARE GREATER THAN TWELVE FEET IN DEPTH. SEE STANDARD DRAWING D-CB-13P FOR DETAILS OF PRECAST NO. 13 CONCRETE CATCH BASINS TWELVE FEET AND LESS IN DEPTH. SEE STANDARD DRAWING D-CB-99 FOR ADDITIONAL CONSTRUCTION NOTES & DETAILS.

(B) THIS DIMENSION MAY VARY FROM A MINIMUM OF 0 INCHES TO A MAXIMUM OF 24 INCHES AS LONG AS 23 INCHES IS SATISFIED. THE CONTRACTOR HAS THE OPTION OF USING BRICK OR STANDARD PRECAST CONCRETE RISER FRAMES. THE USE OF BRICK SHALL BE LIMITED TO 6 INCHES. IF THIS DIMENSION EXCEEDS 6 INCHES, PRECAST CONCRETE RISER FRAMES SHALL BE USED AS SHOWN ON STANDARD DRAWING D-RF-1.

(C) THIS DRAWING DEPICTS THE MINIMUM HORIZONTAL REINFORCING AT THE TOP OF CATCH BASIN WALLS. SEE ADDITIONAL DETAILS ON STANDARD DRAWING D-CB-99 FOR TALLER SECTIONS AND STEEL PLACEMENT ABOVE PIPE OPENINGS.

(D) CAST-IN-PLACE CONCRETE CATCH BASINS SHALL BE CONSTRUCTED IN ACCORDANCE WITH STANDARD SPECIFICATIONS, SECTION 611 AND/OR SPECIAL PROVISIONS UNLESS SUPERSEDED BY THIS DRAWING. ALL PRECAST ELEMENTS SHALL MEET ASTM C913 (CURRENT EDITION) UNLESS SUPERSEDED BY THIS DRAWING.

(E) THE FOLLOWING MATERIAL PROPERTIES ARE REQUIRED FOR BOTH CAST-IN-PLACE AND PRECAST STRUCTURES.

CONCRETE: f'_c = 4,000 POUNDS PER SQUARE INCH AT 28 DAYS
REINFORCING STEEL: ASTM A615, F_y = 60,000 POUNDS PER SQUARE INCH
ALL REINFORCING IS TO BE INSTALLED AS DETAILED ON THIS DRAWING.

(F) PRECAST CATCH BASIN UNITS WHICH ARE DAMAGED DURING SHIPMENT OR INSTALLATION WILL BE REJECTED. IT SHALL BE THE RESPONSIBILITY OF THE CONTRACTOR TO REPLACE DAMAGED CATCH BASIN UNITS AT HIS OWN EXPENSE.

(G) THE CONTRACTOR MAY ELIMINATE THE A503 BARS BY LENGTHENING THE VERTICAL LEG OF THE H500/H501 BARS SO THAT 1½ INCHES OF CLEAR COVER IS PROVIDED AT THE TOP OF THE STRUCTURE.

(H) APPROPRIATE SIZING AND LOCATION OF LIFTING DEVICES SHALL BE THE RESPONSIBILITY OF THE FABRICATOR.

(I) THE CONTRACTOR IS TO PATCH ALL LIFTING DEVICE HOLES WITH GROUT AND PLACE A MINIMUM OF ONE (1) INCH OF COVER OVER THE HARDWARE OF THESE DEVICES ON BOTH TOP AND BOTTOM SURFACES.

(J) ALTERNATIVE JOINT DETAILS MAY BE ACCEPTABLE. SEE STANDARD DRAWING D-CB-99 FOR ADDITIONAL DETAILS.

(K) SEE ROADWAY PLANS DRAINAGE TABULATION FOR PIPE INLET AND OUTLET ELEVATIONS. IF NEEDED, INVERT ELEVATIONS MAY BE ADJUSTED AS DIRECTED BY THE ENGINEER IN ORDER TO ACCOMMODATE INLET AND OUTLET PIPES.

(L) FOR CASES WHERE THE OUTLET PIPE DIAMETER IS LARGER THAN THE INLET PIPE DIAMETER, A MINIMUM 23 INCH DEPTH SHALL BE MAINTAINED ABOVE THE OUTLET PIPE.

(M) SEE STANDARD DRAWING D-CBB-13 FOR DETAILS REGARDING CAST IRON GRATES, FRAMES AND CURB INLETS.

(N) PAY DEPTH MEASUREMENT MADE FROM TOP OF GRATE TO OUTLET FLOW ELEVATION. PAYMENT FOR CATCH BASIN WILL BE MADE UNDER ITEM NUMBERS 611-13.01 CATCH BASINS, TYPE 13, 0′-4′ DEPTH THROUGH 611-13.05 CATCH BASINS, TYPE 13, > 16′-20′ DEPTH PER EACH. PAYMENT INCLUDES RISER SECTION AND GRATE.

REINFORCING STEEL LEGEND

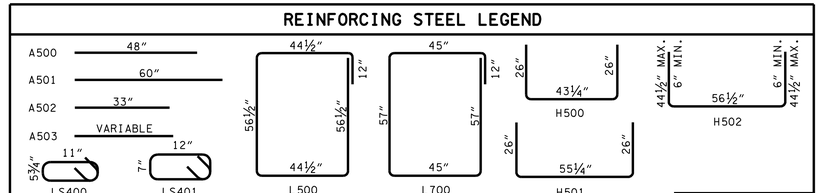

DIMENSIONS SHOWN ON THIS LEGEND ARE OUTSIDE TO OUTSIDE OF BAR. STANDARD C.R.S.I. HOOK AND TIE DETAILS SHALL APPLY, EXCEPT AS NOTED.

☐ MINOR REVISION -- FHWA APPROVAL NOT REQUIRED.

STATE OF TENNESSEE
DEPARTMENT OF TRANSPORTATION

STANDARD RECTANGULAR CONCRETE NO.13 CATCH BASIN

NOT TO SCALE | 12-18-96 | D-CB-13S